33-5022-022-0040

Approved

Edward Silva, Village Manager

Date

VILLAGE OF PALMETTO BAY
9705 E. HIBISCUS STREET
PALMETTO BAY, FLORIDA 33157
(305) 259-1234 Fax: (305) 259-1290

REQUEST FOR PUBLIC RECORDS

Requests are filled in accordance with the provisions of Chapters 119 and 257, Florida Statutes.

DATE: 3/1/2019

NAME: Jose E Calzadilla

COMPANY: Real Estate Empire

ADDRESS: 15940 SW 92nd Ave P.B. 33157

PHONE: 305-930-3532 FAX:

EMAIL: contact@josecalzadilla.com

REQUEST (Attach additional page, if necessary): Copies of the following documents:

Blueprints & closed permit BRF-2016 2099

Any open permit - 14400 SW 79th Ct Palmetto Bay Fl 33158

☆ no open permits in Palmetto Bay ☆

****

FOR USE BY VILLAGE STAFF ONLY

TRACKING NO.: 2019-077

DATE FORWARDED: 3-4-19

ASSIGNED DEPT: Building

DATE REQUEST FILLED: 3/6/19

NUMBER OF COPIES: 43

ESTIMATED TIME (IF APPLICABLE):

ESTIMATED COST:

HOW WAS REQUEST FILLED?

IF NOT FILLED, REASON:

BY: [signature]

Village of Palmetto Bay Florida

PLANS PROCESSING

Process Number: BRF2016-2099

Description of Work: Roof

Property Address: 14400 SW 79 Ct

Rush

Department	Date In	Date Out	Total Business Days	Approved	Denied	Comments
Planning & Zoning						
Building	2/16/16	2/23/16		✓		
ADA Review						
Structural						
Electrical						
Mechanical						
Plumbing						
Public Works						
Pending Corrections						
Code Enforcement Verification	2/23/16	Verified				
Job Cost/ Value of Work (Inspector Approval)	22,000 —					
Building Official approval						
Final Signature	2/23/16					
Pricing						
Call for Pick up						

Village of Palmetto Bay Permit Application

Department of Building & Capital Projects
9705 E. Hibiscus Street
Palmetto Bay, Florida 33157
Phone: (305) 259-1250 Fax: (863) 027-5576 Inspections: (305) 259-1253

GENERAL INFORMATION: Please read these instructions carefully before submitting the work for review

This application must be completed and signed by both the property owner and qualifier. Both of these signatures must be notarized. Please print legibly or type in order not to delay your application. For roofing permits, in addition to this permit you must also fill out a roofing permit application. Express permits require an additional fee and will only be accepted between the hours of 8:00 A.M. and 10:00 A.M., Monday through Friday. All other permits/plans must be dropped off before 4:30 p.m. for regular processing. During the processing of your application you may be asked to submit additional information. There may be additional permits and reviews required from other governmental agencies not affiliated with Palmetto Bay.

APPLICATION:

Clerk's Initials	Plan Process Number	Master Permit Number	Subsidiary Permit Number(s)	Expiration Date
	BRF2016-2099			

Job Address: 14400 S.W. 79 CT (Address) PALMETTO BAY, (City) FLA (State) 33158 (Zip Code)
Unit number

Folio Number: 33-5022-022-0040
Lot: 4 Block: 4
Subdivision: Mangowood Park PB: 77 PG: 17
Current Use of Property: Single Family Home
Proposed Use of Property: Same
Description of Work: Re-Roofing

Zoning: Square Feet:
Tenant Information: Unit Number:

Linear Feet: Units: Stories:
Value of Proposed Work: 22,000 Est. Bldg. Value:
Tax Assessed Value:
Flood Zone: Base Floor Elev.:
Homeowner's Association:

I affirm that there ☐ are or ☐ are no restrictive covenants associated with the underlying property that would affect the pending application. Failure to disclose this information shall result in the immediate revocation of any type of permit or certificate of use/occupancy.

Check Permit Type		Check Permit Change		Check Type of Improvement			
Building		Change of Contractor		New Construction		Deck/Concrete flatwork	
Electrical		Permit Renewal		Exterior Alteration		Window Replacement	
Mechanical		Plan Revision		Interior Alteration		Shutters	
Plumbing		Permit Extension		Attached Addition		Garage Doors	
LPGX		Supplement		Detached Addition		Storage Shed	
Roofing	✓	Re-inspection Fee		Repair		Railings	
Fence				Repair due to Fire		Stairs	
Sign				Demolish		Windows/Doors	
Public Works				Screen Enclosure		Roofing	
Other				Driveway		Re-Roof	✓
				Fence		Seal-cote	
				Pool		Other	

2/24/16

Architect Information	Engineer Information
Name:	Name:
License Number:	License Number:
Address:	Address:
Telephone Number:	Telephone Number:
Fax Number:	Fax Number:
Other:	Other:

Property Owner	Contractor
Name: ALBIN TARRIDE	Company Name Dade Professional Roofing Corp
Address: 14400 S.W. 79 CT MIAMI, FL 33158	Qualifier Dorian Godoy
Home Telephone: 786-942-2823	License Number RC 290 27465
Business Telephone:	Address 971 NW 35 AVE
Other Telephone:	Telephone Number
Fax Number:	Fax Number
Does Property have Homestead Exemption YES	**Phone Number for Pick Up**

Bond Company (if applicable)	Mortgage Lender
Name:	Name:
Address:	Address:
City: State: Zip	City: State: Zip

Classification Of Proposed Work		
Residential ☑ Duplex ☐ Townhouse ☐ Multi Family ☐ Commercial ☐ Industrial ☐ Other ☐		
Effective Code_____	Occupancy_____	Construction Type _____
Zoning:	Variance Number:	Remarks:

OWNER AFFIDAVIT

Application is hereby made to obtain a permit to do the work and installation as indicated. I certify that no work or installation has commenced prior to the issuance of a permit and that all work will be performed to meet the standards of all laws regulating construction in this jurisdiction. I understand that a separate permit must be secured for **ELECTRICAL, MECHANICAL, PLUMBING, SIGNS, WELLS, POOLS, ROOFING, SHUTTERS, WINDOWS, FURNACES, BOILERS, HEATERS, TANKS, FENCE, DRIVEWAYS and AIR CONDITIONERS, ETC.** In addition to the requirements of this permit, there may be additional restrictions found in the Public Records, and there may be additional permits required from other governmental entities.

I, the owner of the property, have disclosed all information related to any work that has been performed in the prior twelve months to the Building Division as part of this application. Further, I am fully aware that if the cumulative cost of work to my home or business under this and any other permit equals or exceeds fifty percent of the fair market value of the structure, the entire structure must meet the present federal flood criteria for finished floor elevation. I am also fully aware that if the cost of work to my home or business under this and any other permit equals or exceeds fifty per cent of the replacement cost of the structure, then the entire structure must conform to current code requirements of the Florida Building Code.

I, the owner of the property, understand that a permit application is subject to denial and a validated permit or permit card is subject to revocation or modification based upon applicable deeds, covenants, declarations, easements and any other legal restriction. By issuing a permit, the Village of Palmetto Bay makes no representation as to the existence or validity of any property restriction.

I, the owner of the property certify that all the foregoing information is accurate and that all work will be done in compliance with all applicable laws regulating construction and zoning.

WARNING TO OWNER: YOUR FAILURE TO RECORD A NOTICE OF COMMENCEMENT MAY RESULT IN YOUR PAYING TWICE FOR IMPROVMENTS TO YOUR PROPERTY. A NOTICE OF COMMENCEMENT MUST BE RECORDED AND POSTED ON THE JOB SITE BEFORE THE FIRST INSPECTION. IF YOU INTEND TO OBTAIN FINANCING, CONSULT WITH YOUR LENDER OR AN ATTORNEY BEFORE COMMENCING WORK OR RECORDING YOUR NOTICE OF COMMENCEMENT.

Signature of Owner

State of Florida, County of Dade

Sworn to (or affirmed) and subscribed before this 15 day of February, 20 16
by (print name) Albin Tarride

Notary Name

Personally known or I.D.
Type of identification produced FL DRIVERS LICENSE

ALEJANDRA BRITO
Notary Public - State of Florida
My Comm. Expires Jun 10, 2018
Commission # FF 101837

Signature of Qualifier

State of Florida, County of Dade

Sworn to (or affirmed) and subscribed before this 15 day of February, 20 16
by (print name) Dorian Godoy

Notary Name

Personally known or I.D.
Type of identification produced FL DRIVERS LICENSE

ALEJANDRA BRITO
Notary Public - State of Florida
My Comm. Expires Jun 10, 2018
Commission # FF 101837

IMPORTANT NOTICES

- Do not begin work without receiving you validated permit and permit card. Applying for a permit does not grant you the right to commence construction. Construction can only occur during the hours of 7:00 a.m. to 6:00 p.m., Monday thru Friday and from the hours of 9:00 a.m. to 5:00 p.m. on Saturdays. No construction activity is permitted on Sunday.
- All construction sites must be maintained in a clean and orderly condition free from construction debris. Failure to do so will result in a fine and a suspension of inspections until said property is cleaned.
- Streets and neighboring properties shall be kept free from dirt and debris.
- Swales must be protected from damage by equipment or vehicles and sidewalks cannot be blocked.
- Portable Toilets for construction jobs require a separate permit. If toilet is not available the inspection will not be performed.
- Water cannot be discharged into the right of way or storm drains without the approval of the Public Works Department.
- No equipment or materials can be stored on the right of way; they must only be stored on your property.
- Florida Department of Health approval is required for applications involving Septic Tanks. Department of Environmental Resources Management (DERM) and /or Miami-Dade Water and Sewer Department approval is required for applications involving sewers and water. The tree section of the Department of Environmental Resources Management (DERM) approval is required on all landscape plans and on all tree removal applications.

CHECKLIST (OFFICE USE ONLY)

☐ OWNER-BUILDER FORM (Attached)

☐ FIRE DEPARTMENT APPROVAL (Commercial/multi (family only)

☐ CONCURRENCY (New Construction)

☐ PROOF OF OWNERSHIP (Attached)

☐ CONDO ASSOCIATION APPROVAL

☐ HEALTH DEPARTMENT APPROVAL (Septic/Sewer)

☐ IMPACT FEE (New Construction)

☐ SCHOOL REVIEW (New Construction)

☐ DERM REVIEW (New Construction/Additions/Tree Removal)

☐ PUBLIC WORKS

☐ PERMIT CLERK REVIEW
By: _____

- ☐ Complete Application
- ☐ Current liability ins.
- ☐ Worker's Comp.
- ☐ Cont. Lic. Check

☐ OTHER (Specify and Attach)

☐ FLORIDA DEPARTMENT OF BUISNESS AND PROFESSIONAL REGULATION APPROVAL (RESTAURANTS)

☒ UPFRONT FEES AMOUNT: 125.00 > Paid 2/16/16

PERMIT FEES (OFFICE USE ONLY)

Scanning Fees Small (1.85 per sheet)		**Art in Public Places**	
Scanning Fees Large (3.50 per sheet)		**Certificate of Use and Occupancy**	
Village of Palmetto Bay Permit Fees	540.86	**Concurrency Fee** (7.35%)	
Miami-Dade County Fees (sq. ft. x $65//1000x0.60)	13.20	**Technology Fee** (6.3%)	
Flood Zone Review		**Zoning Inspection Fee** (157.50 per application)	
Radon-Inspector State Educational Fund and DCA State fee	10.50 10.50	**Administration Fee**	
Code Enforcement Fine		**Express Fee** (25.00)	$25.00
Certificate of Completion		**Public Works Fee**	
Construction Sign Fee		**Landscape Review Fee** (175.00 per hour)	
Roll-off Waste Container Fee (105.00 per container site)		**Special Review Fee** (89.25 per hour)	
Rework Fee		**Other**	

$600.06

PLAN REVIEWER APPROVAL AREA (OFFICE USE ONLY)

SECTION	REVIEWER APPROVAL'S NAME	APPROVAL DATE	REJECTED DATE NUMBER 1	REJECTED DATE NUMBER 2	REJECTED DATE NUMBER 3
COMMUNITY DEVELOPMENT					
ZONING					
ELECTRICAL					
MECHANICAL					
PLUMBING					
FIRE					
ROOFING					
PUBLIC WORKS					
PLANNING					
STRUCTURAL					
BUILDING	OPS.	2/23/16			
BUILDING OFFICIAL					

REWORKS: A fee of **$105.50** may be charged for failure to make required corrections previously indicated. The fee shall be charged after the initial review plus one follow up review per trade. Please note that Florida Statutes 553.80 section 2(b) states "with respect to evaluation of design professionals documents, if a local government finds it necessary, in order to enforce compliance with the Florida Building Code and issue a permit, to reject design documents required by the code three or more times for failure to correct a code violation specifically noted in each rejection, including but not limited to egress, fire protection, structural stability, energy, accessibility, lighting, ventilation, electrical, mechanical, plumbing, and gas systems, or other requirements identified by rule of the Florida Building Commission adopted pursuant to Chapter 120, the local government shall impose, each time after third such review the plans are rejected for that code violation a fee of **four times the amount** of the proportion of the permit fee attributed to plans review".

ISSUING OFFICIAL

FINAL PLAN REVIEWED AND PREPARED FOR ISSUANCE BY: _____ DATE: 2-23-16

CONDITIONS OF APPROVAL

PLAN TRACKING

Plans Checked out	Date	Clerk	Plans Checked in	Date	Clerk

Village of Palmetto Bay

ADDENDUM TO BUILDING PERMIT APPLICATION

DATE:_____ PERMIT #:_____

(AN APPLICATION FOR BUILDING PERMIT MUST ACCOMPANY THIS ADDENDUM IF A MASTER PERMIT HAS BEEN OBTAINED, THE OWNER'S NOTARIZED SIGNATURE NEED NOT BE PRESENT ON SUBSEQUENT APPLICATIONS.)

PLUMBING

ITEM	UNIT	FEE
BATH TUB		
BIDET		
DISHWASHER		
DISPOSAL		
DRINKING FOUNTAIN		
FLOOR DRAIN		
GREASE TRAP		
INTERCEPTOR		
LAVATORY		
LAUNDRY TRAY		
CLOTHES WASHER		
SHOWER		
SINK, POT/3 COMP.		
SINK, RESIDENCE		
SINK, SLOP		
TEMPORARY WATER CLOSET		
URINAL		
WATER CLOSET		
INDIRECT WASTES		
WATER SUPPLY TO:		
A/C UNIT		
FIRE SPRINKLER		
HEATER-NEW INST.		
HEATER-REPLACE		
LAWN SPRINKLER-WELL		
SWIMMING POOL		
WATER SERVICE		
SEWER CONNECTIONS		
UTILITY-SEWER		
UTILITY-WATER		
SEPTIC TANK		
RELAY		
DRAINFIELD4" TILE/RES.		
PUMP & ABANDON SEPTIC TANK		
SOAKAGE PIT CH. FL.		
CATCH BASIN		
DISCHARGE WELL		
DOMESTIC WELL		
AREA DRAIN		
ROOF INLET		
SOLAR WATER HEATER		
FIRE STANDPIPE		
POOL PIPING		
LAWN SPRINKLER SYSTEM		
GAS RANGE		
METER SET (GAS)		
GAS PIPING		

ELECTRICAL

ITEM	UNIT	FEE
SWITCH OUTLETS		
LIGHT OUTLETS		
RECEPTACLES		
SERVICE TEMPORARY		
SERVICE SIZE IN AMPS		
SERVICE REPAIR/METER CHANGE		
APPLIANCE OUTLETS		
RANGE TOP		
OVEN		
WATER HEATER		
MOTORS 0-1 HP		
MOTORS OVER 1-3 HP		
MOTORS OVER 3-5 HP		
MOTORS OVER 5-8 HP		
MOTORS OVER 8-10 HP		
MOTORS OVER 10-25 HP		
MOTORS OVER 25-100 HP		
MOTORS OVER 100 HP		
A/C WINDOW		
AIR CONDITIONERS		
STRIP HEATER		
GENERATORS TRANSFORMERS		
GENERATORS TRANSFORMERS		
GENERATORS TRANSFORMERS		
SPECIAL PURPOSE		
OUTLETS COMMERCIAL		
SIGN TUBES		
SIGN TRANSFORMERS		
SIGN TIME CLOCK		
FIXTURES		
ANTENNA		
TELEVISION OUTLETS		
VIOLATION		
REINSPECTION		

MECHANICAL

ITEM	UNIT	FEE
SPACE HEATERS		
CENTRAL HEATERS		
A/C (WIND)		
A/C-CENTRAL		
DUCT WORK		
REFRIGERATION		
PROCESS AND PRESS PIPING		
UNDERGROUND TANKS		
ABOVE GROUND TANKS		
U.F. PRESSURE VESSELS		
STEAM BOILERS		
HOT WATER BOILERS		
MECHANICAL VENTILATION		
TRANSPORTING ASSEMBLIES		
ELEVATORS/ESCALATORS		
FIRE SPRINKLER SYSTEMS		
COOLING TOWERS		
VIOLATION		
REINSPECTION		

How do I record a document?

You have three options for recording your documents in the Official Records;

1. You can bring your original documents in person, along with the appropriate fees, to the main office located at the Courthouse East Building.
   Recording Department
   22 N.W. 1st Street, First floor
   Miami, Florida 33128

2. You can mail your original documents along with the appropriate fees. Please mail documents for recording to the address listed below:
   Miami-Dade County Recorder
   P.O. Box 011711
   Flagler Station
   Miami, Florida 33101

3. You can eRecord your document through one of our approved vendors. With this option, you retain your original document and the recorded image is available the next day. Additional information on this option, including links to the vendors, is available on the web at www.miami-dadeclerk.com/eRecordings.asp .

Records Library

Courthouse East Building, 2nd floor

Copies of all recorded documents, along with the indexes, are maintained in the Records Library.

Recorded documents consist of: deeds, mortgages, satisfactions, releases and assignments of mortgages, claims of liens, UCC's (financial statements), affidavits, judgments, as well as civil court orders.

The cost for obtaining a copy of a document is $1.00 per page and $2.00 to certify. This can be done by mail, walk-in or via the web.

Certified Copies can be ordered via the web. This option is available after the image is displayed.

The website address is:

www2.miami-dadeclerk.com/officialrecords

Records Searches

All recorded documents can be researched in the records library by the party's name, last name first (ex: Last Name (space) First Name or Company Name), Clerk's File Number (CFN), legal description (subdivision name, lot, block, plat book and page) and Official Records Book and Page. The Records staff can perform the search of the records, or the public can be assisted with the search. The fee for searches is $2.00 per name per year.

You can also perform a search via the internet for most recorded documents. Earlier documents are in the process of being made available on the web. A Premier service is available for a fee and enables more complex searches.

The web address is:

www2.miami-dadeclerk.com/officialrecords

Search Request by Mail

If you would like to request a search by mail, you need to include the full name you would like searched and the legal description or address, if you are looking for a deed or mortgage.
If you would like a search for a satisfaction of mortgage or lien, please send the party's name and the original book and page of the mortgage or lien.

We do not perform any searches over the telephone.

Important Notice:

The various credit bureaus search for liens and judgments recorded in our offices and link these documents to your credit history. If you have been advised by an agency that you have an item recorded against your name and you do not know what this item is, you may obtain the book and page from them to request a copy of the item from the Records Library by mail or the web.

Americans With Disabilities Act of 1990: TDD/TTY users may contact the telephone number(s) listed via the Florida Relay Service at 1-800-955-8771, or by dialing 711. This document is available in alternate formats upon request.

CLK/CT 985 Rev. 09/14

Miami-Dade County Clerk's Office

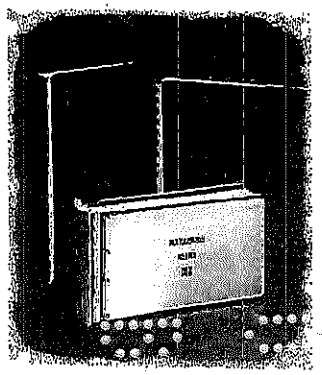

COUNTY RECORDER

Business Hours: 9:00 a.m. - 4:00 p.m.
(305) 275-1155, press 6

22 N.W. 1st Street
Miami, Florida 33128

Harvey Ruvin, Clerk

EXPRESS PERMITS FEE

I understand that an additional fee of $ 25.00 (per-review) will be applied to my permit at final fee.

Authorization: Francisco H Rocha **Date:** 3 PM

EXPEDITED PLAN REVIEW

I understand that an additional fee of **$89.25 (per trade, per review)** will be applied to a rush review for permits with plans. (For example: New Construction, Additions, and Remodeling & Revision to plans.

Authorization: **Date:**

OFFICE OF THE PROPERTY APPRAISER

Summary Report

Generated On : 2/15/2016

Property Information	
Folio:	33-5022-022-0040
Property Address:	14400 SW 79 CT Palmetto Bay, FL 33158-2019
Owner	ALBIN D TARRIDE &W ODALYS
Mailing Address	14400 SW 79 CT MIAMI, FL 33158-2019
Primary Zone	2100 ESTATES - 15000 SQFT LOT
Primary Land Use	0101 RESIDENTIAL - SINGLE FAMILY : 1 UNIT
Beds / Baths / Half	3 / 2 / 0
Floors	1
Living Units	1
Actual Area	3,291 Sq.Ft
Living Area	2,351 Sq.Ft
Adjusted Area	2,741 Sq.Ft
Lot Size	19,594 Sq.Ft
Year Built	1966

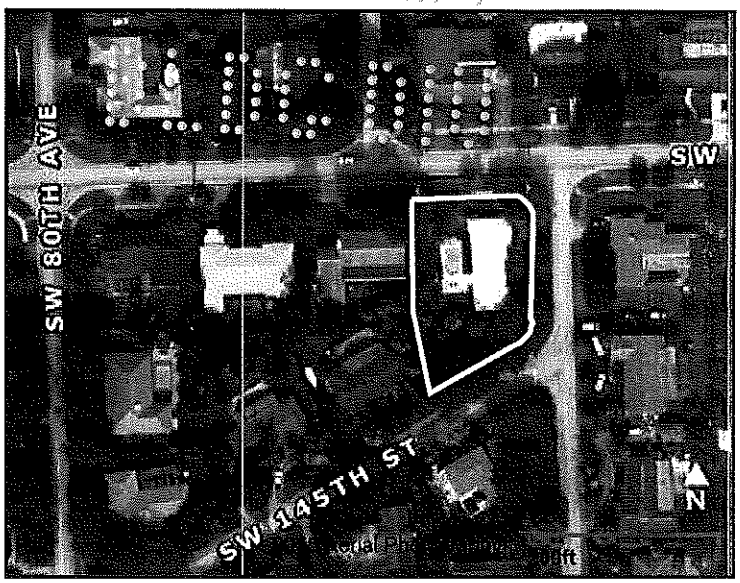

Assessment Information			
Year	2015	2014	2013
Land Value	$207,564	$198,916	$164,322
Building Value	$224,219	$206,071	$176,445
XF Value	$15,893	$16,044	$16,195
Market Value	$447,676	$421,031	$356,962
Assessed Value	$282,819	$280,575	$276,429

Taxable Value Information	2015	2014	2013
County			
Exemption Value	$50,000	$50,000	$50,000
Taxable Value	$232,819	$230,575	$226,429
School Board			
Exemption Value	$25,000	$25,000	$25,000
Taxable Value	$257,819	$255,575	$251,429
City			
Exemption Value	$50,000	$50,000	$50,000
Taxable Value	$232,819	$230,575	$226,429
Regional			
Exemption Value	$50,000	$50,000	$50,000
Taxable Value	$232,819	$230,575	$226,429

Benefits Information				
Benefit	Type	2015	2014	2013
Save Our Homes Cap	Assessment Reduction	$164,857	$140,456	$80,533
Homestead	Exemption	$25,000	$25,000	$25,000
Second Homestead	Exemption	$25,000	$25,000	$25,000

Note: Not all benefits are applicable to all Taxable Values (i.e. County, School Board, City, Regional).

Sales Information			
Previous Sale	Price	OR Book-Page	Qualification Description
05/01/1992	$152,000	15533-1818	Sales which are qualified
07/01/1988	$143,000	13768-3936	Sales which are qualified
11/01/1978	$75,000	10219-0705	Sales which are qualified

Short Legal Description

22 55 40
MANGOWOOD PARK 1ST ADD PB 77-17
LOT 4 BLK 4
OR 15533-1818 0592 1
F/A/U 30-5022-022-0040

The Office of the Property Appraiser is continually editing and updating the tax roll. This website may not reflect the most current information on record. The Property Appraiser and Miami-Dade County assumes no liability, see full disclaimer and User Agreement at http://www.miamidade.gov/info/disclaimer.asp

Version:

CFN 2016R0093506
OR BK 29962 Pg 3995 (1Pgs)
RECORDED 02/16/2016 09:45:02
HARVEY RUVIN, CLERK OF COURT
MIAMI-DADE COUNTY, FLORIDA

NOTICE OF COMMENCEMENT

A RECORDED COPY MUST BE POSTED ON THE JOB SITE AT TIME OF FIRST INSPECTION

PERMIT NO._____ TAX FOLIO NO. 33-5022-022-0040

STATE OF FLORIDA:
COUNTY OF MIAMI-DADE:

THE UNDERSIGNED hereby gives notice that improvements will be made to certain real property, and in accordance with Chapter 713, Florida Statutes, the following information is provided in this Notice of Commencement.

Space above reserved for use of recording office

1. Legal description of property and street/address: 22 55 40 Mangowood Park 1st Add PB 77-17 LOT 4 BLK 4 / 14400 SW 79 CT, Palmetto Bay, FL 33158
2. Description of improvement: Re-Roof
3. Owner(s) name and address: Albin D Tarride 14400 SW 79 CT
Interest in property: Re Roof Palmetto Bay, FL 33158
Name and address of fee simple titleholder:
4. Contractor's name, address and phone number: Dade Professional Roofing Corp / Dorian Godoy 971 NW 35 AVE Miami, FL 33125
5. Surety: (Payment bond required by owner from contractor, if any)
Name, address and phone number:
Amount of bond $ 22,000
6. Lender's name and address: N/A
7. Persons within the State of Florida designated by Owner upon whom notices or other documents may be served as provided by Section 713.13(1)(a)7., Florida Statutes,
Name, address and phone number: N/A
8. In addition to himself, Owners designates the following person(s) to receive a copy of the Lienor's Notice as provided in Section 713.13(1)(b), Florida Statutes.
Name, address and phone number:
9. Expiration date of this Notice of Commencement: N/A
(the expiration date is 1 year from the date of recording unless a different date is specified)

STATE OF FLORIDA, COUNTY OF DADE
I HEREBY CERTIFY that this is a true copy of the original filed in this office on FEB 16 2016 A D 20 day of
WITNESS my hand and Official Seal.
HARVEY RUVIN, CLERK, Circuit and County Courts
By SHAKIERRA BRAJIL-ELVARD #162582

WARNING TO OWNER: ANY PAYMENTS MADE BY THE OWNER AFTER THE EXPIRATION OF THE NOTICE OF COMMENCEMENT ARE CONSIDERED IMPROPER PAYMENTS UNDER CHAPTER 713, PART I, SECTION 713.13. FLORIDA STATUTES, AND CAN RESULT IN YOUR PAYING TWICE FOR IMPROVEMENTS TO YOUR PROPERTY. A NOTICE OF COMMENCEMENT MUST BE RECORDED AND POSTED ON THE JOB SITE BEFORE THE FIRST INSPECTION. IF YOU INTEND TO OBTAIN FINANCING, CONSULT WITH YOUR LENDER OR AN ATTORNEY BEFORE COMMENCING WORK OR RECORDING YOUR NOTICE OF COMMENCEMENT.

Signature(s) of Owner(s) or Owner(s)' Authorized Officer/Director/Partner/Manager
Prepared By [signature] Prepared By
Print Name ALBIN TARRIDE Print Name
Title/Office Title/Office

STATE OF FLORIDA
COUNTY OF MIAMI-DADE
The foregoing instrument was acknowledged before me this 15 day of February 2016
By Albin Tarride
☐ Individually, or ☐ as FL DRIVERS LICENSE for
☐ Personally known, or ☐ produced the following type of identification:
Signature of Notary Public:
Print Name:
(SEAL)

ALEJANDRA BRITO
Notary Public - State of Florida
My Comm. Expires Jun 10, 2018
Commission # FF 101837

VERIFICATION PURSUANT TO SECTION 92.525, FLORIDA STATUTES
Under penalties of perjury, I declare that I have read the foregoing and that the facts stated in it are true, to the best of my knowledge and belief.

Signature(s) of Owner(s) or Owner(s)'s Authorized Officer/Director/Partner/Manager who signed above:

By [signature] By

SECTION 1524

HIGH VELOCITY HURRICANE ZONES– REQUIRED OWNERS NOTIFICATION FOR ROOFING CONSIDERATIONS

1524.1 Scope. As it pertains to this section, it is the responsibility of the roofing contractor to provide the owner with the required roofing permit, and to explain to the owner the content of this section. The provisions of Chapter 15 of the ***Florida Building Code, Building*** govern the minimum requirements and standards of the industry for roofing system installations. Additionally, the following items should be addressed as part of the agreement between the owner and the contractor. The owner's initial in the designated space indicates that the item has been explained.

ADT **1. Aesthetics-workmanship:** The workmanship provisions of Chapter 15 (High Velocity Hurricane Zone) are for the purpose of providing that the roofing system meets the wind resistance and water intrusion performance standards. Aesthetics (appearance) are not a consideration with respect to workmanship provisions. Aesthetic issues such as color or architectural appearance, that are not part of a zoning code, should be addressed as part of the agreement between the owner and the contractor.

ADT **2. Renailing wood decks:** When replacing roofing, the existing wood roof deck may have to be renailed in accordance with the current provisions of Chapter 16 (High Velocity Hurricane Zones) of the Florida Building Code. (The roof deck is usually concealed prior to removing the existing roof system).

ADT **3. Common roofs:** Common roofs are those which have no visible delineation between neighboring units (i.e. townhouses, condominiums, etc.). In buildings with common roofs, the roofing contractor and/or owner should notify the occupants of adjacent units of roofing work to be performed.

ADT **4. Exposed ceilings:** Exposed, open beam ceilings are where the underside of the roof decking can be viewed from below. The owner may wish to maintain the architectural appearance; therefore, roofing nail penetrations of the underside of the decking may not be acceptable. The owner provides the option of maintaining this appearance.

ADT **5. Ponding water:** The current roof system and/or deck of the building may not drain well and may cause water to pond (accumulate) in low-lying areas of the roof. Ponding can be an indication of structural distress and may require the review of a professional structural engineer. Ponding may shorten the life expectancy and performance of the new roofing system. Ponding conditions may not be evident until the original roofing system is removed. Ponding conditions should be corrected.

ADT **6. Overflow scuppers (wall outlets):** It is required that rainwater flow off so that the roof is not overloaded from a build up of water. Perimeter/edge walls or other roof extensions may block this discharge if overflow scuppers (wall outlets) are not provided. It may be necessary to install overflow scuppers in accordance with the requirements of: Chapter 15 and 16 herein and the ***Florida Building Code, Plumbing***.

ADT **7. Ventilation:** Most roof structures should have some ability to vent natural airflow through the interior of the structural assembly (the building itself). The existing amount of attic ventilation shall not be reduced. **Exception:** Attic spaces, designed by a Florida-licensed engineer or registered architect to eliminate the attic venting, venting shall not be required.

Owner's/Agent's Signature: [signature] Date: 2 / 8 / 16

Contractor's Signature: [signature] Permit Number:

Property Address: 14400 S.W. 79CT PALMETTO BAY, FL 33158

Sheathing Affidavit/ Secondary Water Barrier (FBC 2004)

Job Address: 14400 SW 79 CT Permit No.: _____

Name of Roofing Company: Dade Professional Roofing

Name of Qualifier: Dorian Godoy License No.: 11BS00159

Address: 971 NW 35 Ave Miami Fl 33125

I, Dorian Godoy, do hereby affirm:
(Print Name of Qualifier)

That I have personally inspected the re-nailing of the existing roof sheathing as required by Florida Building Code (FBC) Section 201.1 for the area covered by the roofing permit referenced above and further state that the re-nailing of the sheathing meets the requirements of the current edition of the Florida Building Code sections FBC Section 201.1. Nail spacing shall be 6 (six) inches on center at panel edges, 6(six) inches on center at intermediate supports, and where applicable 4 (four) inches on center over gable ends and sub-fascia. Existing fasteners may be utilized to achieve such minimum spacing. I also certify that a secondary water barrier that meets the requirements of F.B.C. Section 201.2 been achieved and hereby provide the accompany photos for verification.

_____
Qualifier/Contractor Signature * Date

Dorian Godoy, having first been duly sworn, does affirm **(Print Name of Qualifier/ Contractor)** the statement above to be true and correct by his/her own personal knowledge.

Feb 15, 2018
Notary (Seal/Stamp) Date

ALEJANDRA BRITO
Notary Public - State of Florida
My Comm. Expires Jun 10, 2018
Commission # FF 101837

☑ Personally Known to me
☐ Produced photo ID- Type of ID FL DRIVERS LICENSE

* An Owner/Builder acting as contractor is considered the qualifier for this code.

OWNER'S AFFIDAVIT OF EXEMPTION

ROOF TO WALL CONNECTION HURRICANE MITIGATION RETROFIT FOR EXISTING SITE-BUILT SINGLE FAMILY RESIDENTIAL STRUCTURES PURSUANT TO SECTION 553.844 F.S.

To: Village of Palmetto Bay
Department of Building & Capital Projects
9705 East Hibiscus Street
Palmetto Bay, FL 33157

Re: Owner's Name ALBIN TARRIDE

Property Address 14400 S.W. 79 CT PALMETTO BAY, FL 33158

Roofing Permit Number _____

Dear Building Official:

I Albin Tarride certify that I am not required to retrofit the roof to wall connections of my building because:

☒ The just valuation for the structure for purposes of ad valorem taxation in less than $300,000.00.

☐ The building was constructed in compliance with the provisions of the Florida Building Code (FBC) or with the provisions of the 1994 edition of the South Florida Building Code (1994 SFBC).

Signature of Property Owner

ALBIN TARRIDE
Print Name

STATE OF FLORIDA COUNTY OF MIAMI-DADE

Sworn to and subscribed before me this 15 day of February, 20 16,

(SEAL)

ALEJANDRA BRITO
Notary Public - State of Florida
My Comm. Expires Jun 10, 2018
Commission # FF 101837

___ Personally known
___ or Produced Identification

When the just valuation of the structure for purposes of ad valorem taxation is equal to or more than $300,000.00, and the building was not constructed in compliance with the FBC nor with 1994 SFBC, and affidavit of Roof to Wall Connection Hurricane Mitigation Retrofit must be provided.

Florida Building Code 5th Edition (2014)

High-Velocity Hurricane Zone Uniform Permit Application Form.

Section A (General Information)

Master Permit No._____ Process No. _____

Contractor's Name Dorian Godoy, Dade Professional Roofing Corp

Job Address 14400 SW 79CT, Palmetto Bay, FL 33158

ROOF CATEGORY

☑ Low Slope ☐ Mechanically Fastened Tile ☑ Mortar/Adhesive Set Tile

☐ Asphaltic Shingles ☐ Metal Panel/Shingles ☐ Wood Shingles/Shakes

☐ Prescriptive BUR-RAS 150

ROOF TYPE

☐ New Roof ☑ Reroofing ☐ Recovering ☐ Repair ☐ Maintenance

ROOF SYSTEM INFORMATION NO GAS VENTS

Low Slope Roof Area (SF)	Steep Sloped Roof Area (SF)	Total (SF)
500	3618	4118

Section B (Roof Plan)

Sketch Roof Plan: Illustrate all levels and sections, roof drains, scuppers, overflow scuppers and overflow drains. Include dimensions of sections and levels, clearly identify dimensions of elevated pressure zones and location of parapets.

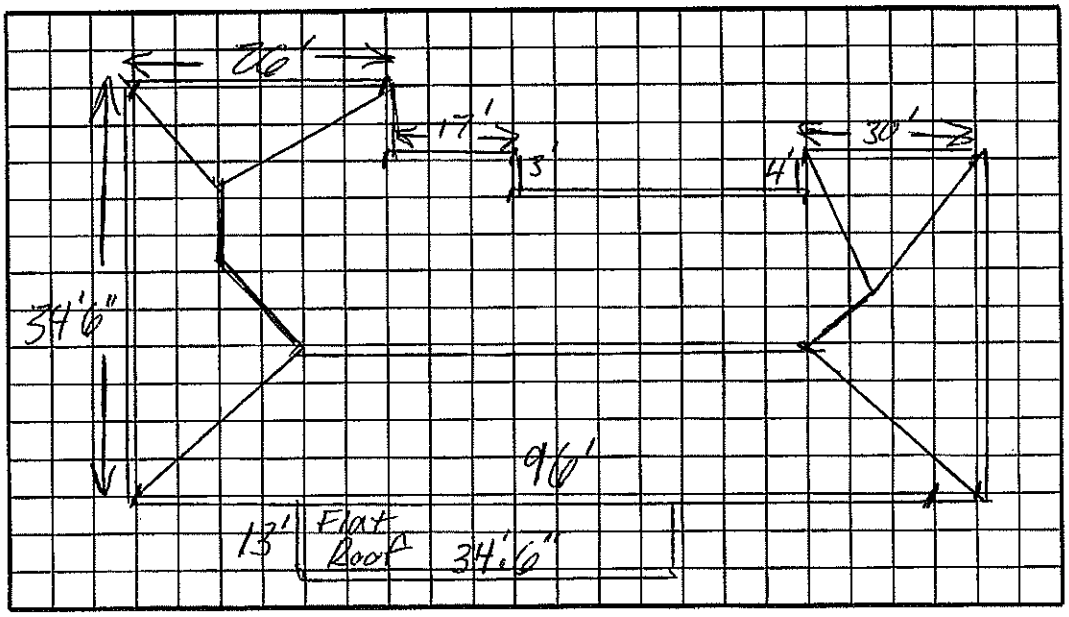

MIAMI-DADE COUNTY

"Delivering Excellence Every Day"

Miami-Dade County HVHZ Electronic Roof Permit Form
Section D Tile Roof System

Roof System Manufacturer: BORAL ROOFING LLC

Notice of Acceptance Number (NOA): 12-0904.12

Minimum Design Wind Pressures, If Applicable (from RAS 127 or Calculations):

P 1: -39.1 **P 2:** -68.1 **P 3:** -100.7

Maximum Design Wind Pressures, (From the NOA Specific system): 31.3 **psf**

Fill in the specific roof assembly components. If a component is not required, insert not applicable (n/a) in the text box.

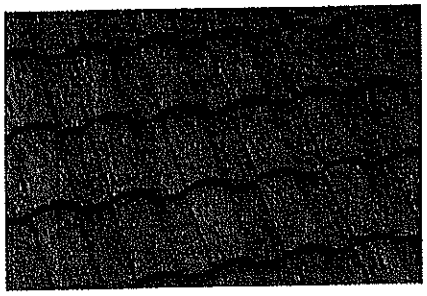

Roof Slope: 3 "/12"

Roof Mean Height: 14 ft.

Method of Tile Attachment:
--Adhesive, 2 Small Paddy Polyfoam Polypro--

Alternate Method of Tile Attachment per NOA:
NA

Drip Edge Size & Gauge: --3" face 26 ga.--

Drip Edge Material Type: --Galvinized Metal--

Drip Edge Fastener Type: 1-1/4" RS NAIL 4" OC

Hook Strip/Cleat gauge or weight: -- Select Hook Strip --

Deck Type: --5/8" Plywood--

Optional Insulation:
NA

Optional Nailable Substrate:
NA

Optional Nailable Substrate Attachment:
NA

Basesheet Type:
ASTM FELT D226 30#

Fastener Type for Basesheet Attachment:
1-1/4" RS NAIL & TIN CAP 1-5/8"

Tile Underlayment (Cap Sheet) Type:
#90 ASTM

Tile Underlayment Attachment Method:
Hot Asphalt Type IV

Tile Profile:
BORAL SAXONY FLAT CONCRETE TILE

MIAMI-DADE COUNTY

"Delivering Excellence Every Day"

Miami-Dade County HVHZ Electronic Roof Permit Form

Section E (Tile Calculations)

Method 1 "Moment Based Tile Calculations Per RAS 127"

For Moment based tile systems, use Method 1. Compare the values for Mr with the values from Mf. If the Mf values are greater than or equal to the Mr values, for each area of the roof, then the tile attachment method is acceptable.

P 1: -39.1 x λ 0.200 = 7.82 - Mg: 7.07 = Mr1: 0.75 ≤ 31.3 NOA Mf

P 2: -68.1 x λ 0.200 = 13.62 - Mg: 7.07 = Mr2: 6.55 ≤ 31.3 NOA Mf

P 3: -100.7 x λ 0.200 = 20.14 - Mg: 7.07 = Mr3: 13.07 ≤ 31.3 NOA Mf

Method 3 "Uplift Based Tile Calculations Per RAS 127"

For Uplift based tile systems use Method 3. Compare the values for F' with the values for Fr. If the F' values are greater than or equal to the Fr values, for each area of the roof, then the tile attachment method is acceptable.

P1: ____ x l: ____ = ____ x w: ____ = ____ - W: ____ = ____ x cos θ: ____ = Fr1: ____ ≤ ____ NOA F'

P2: ____ x l: ____ = ____ x w: ____ = ____ - W: ____ = ____ x cos θ: ____ = Fr2: ____ ≤ ____ NOA F'

P3: ____ x l: ____ = ____ x w: ____ = ____ - W: ____ = ____ x cos θ: ____ = Fr3: ____ ≤ ____ NOA F'

Where to Obtain Information to complete tile calculations

Description	Symbol	Where to Find
Design Pressure	P1 or P2 or P3	Table 1 RAS 127, or by an engineer analysis prepared, signed and sealed by a professional engineer based on ASCE 7.
Mean Roof Height	H	Job Site
Roof Slope	θ	Job Site
Aerodynamic Multiplier	λ	Product Approval (NOA)
Restoring Moment due to Gravity	Mg	Product Approval (NOA)
Attachment Resistance	Mf	Product Approval (NOA)
Required Moment Resistance	Mr	Calculated
Minimum Attachment Resistance	F'	Product Approval (NOA)
Required Uplift Resistance	Fr	Calculated
Average Tile Weight	W	Product Approval (NOA)
Tile Dimensions	l = length w = width	Product Approval (NOA)

MIAMI-DADE COUNTY
DEPARTMENT OF REGULATORY AND ECONOMIC RESOURCES (RER)
BOARD AND CODE ADMINISTRATION DIVISION

MIAMI-DADE COUNTY
PRODUCT CONTROL SECTION
11805 SW 26 Street, Room 208
Miami, Florida 33175-2474
T (786) 315-2590 F (786) 315-2599
www.miamidade.gov/pera

NOTICE OF ACCEPTANCE (NOA)

Boral Roofing LLC.
7575 Irvine Center Drive, Suite 100
Irvine, CA. 92618

SCOPE:

This NOA is being issued under the applicable rules and regulations governing the use of construction materials. The documentation submitted has been reviewed and accepted by Miami-Dade County RER - Product Control Section to be used in Miami Dade County and other areas where allowed by the Authority Having Jurisdiction (AHJ).

This NOA shall not be valid after the expiration date stated below. The Miami-Dade County Product Control Section (In Miami Dade County) and/or the AHJ (in areas other than Miami Dade County) reserve the right to have this product or material tested for quality assurance purposes. If this product or material fails to perform in the accepted manner, the manufacturer will incur the expense of such testing and the AHJ may immediately revoke, modify, or suspend the use of such product or material within their jurisdiction. RER reserves the right to revoke this acceptance, if it is determined by Miami-Dade County Product Control Section that this product or material fails to meet the requirements of the applicable building code.
This product is approved as described herein, and has been designed to comply with the Florida Building Code including the High Velocity Hurricane Zone of the Florida Building Code.

DESCRIPTION: Saxony (Shake, Slate, Split Shake) Concrete Roof Tile

LABELING: Each unit shall bear a permanent label with the manufacturer's name or logo, city, state and following statement: "Miami-Dade County Product Control Approved", unless otherwise noted herein.

RENEWAL of this NOA shall be considered after a renewal application has been filed and there has been no change in the applicable building code negatively affecting the performance of this product.

TERMINATION of this NOA will occur after the expiration date or if there has been a revision or change in the materials, use, and/or manufacture of the product or process. Misuse of this NOA as an endorsement of any product, for sales, advertising or any other purposes shall automatically terminate this NOA. Failure to comply with any section of this NOA shall be cause for termination and removal of NOA.

ADVERTISEMENT: The NOA number preceded by the words Miami-Dade County, Florida, and followed by the expiration date may be displayed in advertising literature. If any portion of the NOA is displayed, then it shall be done in its entirety.

INSPECTION: A copy of this entire NOA shall be provided to the user by the manufacturer or its distributors and shall be available for inspection at the job site at the request of the Building Official.

This renews NOA# 12-0308.25 and consists of pages 1 through 8.
The submitted documentation was reviewed by Alex Tigera.

MIAMI-DADE COUNTY APPROVED

NOA No.: 12-0904.12
Expiration Date: 12/16/17
Approval Date: 12/06/12

ROOFING ASSEMBLY APPROVAL

Category: Roofing
Sub Category: Roofing Tiles
Material: Concrete

1. SCOPE

This renews and revises a system using Saxony (Shake, Slate and Split Shake) Concrete Roof Tile, as manufactured Boral Roofing LLC in Lake Wales, FL and described in Section 2 of this Notice of Acceptance. For locations where the pressure requirements, as determined by applicable Building Code does not exceed the design pressure values obtained by calculations in compliance with RAS 127 using the values listed in section 4 herein. The attachment calculations shall be done as a moment based system.

2. PRODUCT DESCRIPTION

Manufactured by Applicant	Dimensions	Test Specifications	Product Description
Monier Lifetile LLC Saxony (Shake, Slate and Split Shake) Tile	l = 16½" w = 12-3/8" .6" thick	TAS 112	Flat, interlocking, high pressure extruded concrete roof tile equipped with two nail holes. For direct deck or battened nail-on, mortar or adhesive set applications.
Trim Pieces	l = varies w = varies varying thickness	TAS 112	Accessory trim, concrete roof pieces for use at hips, rakes, ridges and valley terminations. Manufactured for each tile profile.

2.1 MANUFACTURING LOCATION

2.1.1. Lake Wales, FL.

2.2 EVIDENCE SUBMITTED:

Test Agency	Test Identifier	Test Name/Report	Date
Redland Technologies	7161-03 Appendix III	Static Uplift Testing PA 102 & PA 102(A)	Dec. 1991
The Center for Applied Engineering, Inc.	94-084	Static Uplift Testing PA 101 (Mortar Set)	May 1994
The Center for Applied Engineering, Inc.	94-060A	Static Uplift Testing PA 101 (Adhesive Set)	March, 1994
The Center for Applied Engineering, Inc.	25-7183-6	Static Uplift Testing PA 102 (2 Quik-Drive Screws, Direct Deck)	Feb. 1995
The Center for Applied Engineering, Inc.	25-7183-5	Static Uplift Testing PA 102 (2 Quik-Drive Screws, Battens)	Feb. 1995
The Center for Applied Engineering, Inc.	25-7214-1	Static Uplift Testing PA 102 (1 Quik-Drive Screw, Direct Deck)	March, 1995

2.2 EVIDENCE SUBMITTED:

Test Agency	Test Identifier	Test Name/Report	Date
The Center for Applied Engineering, Inc.	25-7214-5	Static Uplift Testing PA 102 (1 Quik-Drive Screw, Battens)	March 1995
Redland Technologies	7161-03 Appendix II	Wind Tunnel Testing PA 108 (Nail-On)	Dec. 1991
Redland Technologies	Letter Dated Aug. 1, 1994	Wind Tunnel Testing PA 108 (Nail-On)	Aug. 1994
Redland Technologies	P0631-01	Wind Tunnel Testing PA 108 (Mortar Set)	July 1994
Redland Technologies	P0402	Withdrawal Resistance Testing of screw vs. smooth shank nails	Sept. 1993
The Center for Applied Engineering, Inc.	Project No. 307025 Test #MDC-77	Wind Driven Rain PA 100	Oct. 1994
Celotex Corporation Testing Service	520109-1 520111-4	Static Uplift Testing PA 101	Dec. 1998
Celotex Corporation Testing Service	520191-1	Static Uplift Testing PA 101	March 1999
Walker Engineering, Inc.	Calculations	Aerodynamic Multiplier	June 2007
Walker Engineering, Inc.	Evaluation Calculations	25-7094	February 1996
Walker Engineering, Inc.	Evaluation Calculations	25-7496	April 1996
Walker Engineering, Inc.	Evaluation Calculations	25-7584 25-7804b-8 25-7804-4 & 5 25-7848-6	December 1996
Walker Engineering, Inc.	Evaluation Calculations	25-7183	March 1995
Walker Engineering, Inc.	Calculations	Two Patty Adhesive Set System	April 1999
Walker Engineering, Inc.	Calculations	Restoring Moment Due to Gravity	June 2007
Nutting Engineering	129	TAS-112	Jan. 2007

3. LIMITATIONS

3.1 Fire classification is not part of this acceptance.

3.2 For mortar or adhesive set tile applications, a static field uplift test shall be performed in accordance with TAS 106.

3.3 Applicant shall retain the services of a Miami-Dade County Certified Laboratory to perform quarterly test in accordance with TAS 112, appendix 'A'. Such testing shall be submitted to the Building Code Compliance Office for review.

3.4 Minimum underlayment shall be in compliance with the applicable Roofing Applications Standards listed section 4.1 herein.

3.5 30/90 hot mopped underlayment applications may be installed perpendicular to the roof slope unless stated otherwise by the underlayment material manufacturers published literature.

3.6 This acceptance is for wood deck applications. Minimum deck requirements shall be in compliance with applicable building code.

4. INSTALLATION

4.1 Saxony (Shake, Slate and Split Shake) Concrete Roof Tile and its components shall be installed in strict compliance with Roofing Application Standard RAS 118, RAS 119, and RAS 120.

4.2 Data For Attachment Calculations

Table 1: Average Weight (W) and Dimensions (l x w)			
Tile Profile	**Weight-W (lbf)**	**Length-l (ft)**	**Width-w (ft)**
Saxony (Shake, Slate and Split Shake) Tile	11.8	1.375	1.02

Table 2: Aerodynamic Multipliers - λ (ft^3)		
Tile Profile	**λ (ft^3) Batten Application**	**λ (ft^3) Direct Deck Application**
Saxony (Shake, Slate and Split Shake) Tile	0.185	0.200

Table 3: Restoring Moments due to Gravity - M_g (ft-lbf)												
Tile Profile	**2":12"**		**3":12"**		**4":12"**		**5":12"**		**6":12"**		**7":12" or greater**	
	Battens	Direct Deck	Battens	Direct Deck	Battens	Direct Deck	Battens	Direct Deck	Battens	Direct Deck	Battens	Direct Deck
Saxony (Shake, Slate and Split Shake) Tile	6.63	7.14	6.56	7.07	6.47	6.97	6.34	6.83	6.18	6.66	6.02	6.48

Table 4: Attachment Resistance Expressed as a Moment - M_f (ft-lbf) for Nail-On Systems				
Tile Profile	**Fastener Type**	**Direct Deck (min 15/32" plywood)**	**Direct Deck (min. 19/32" plywood)**	**Battens**
Saxony (Shake, Slate and Split Shake) Tile	2-10d Ring Shank Nails	30.9	38.1	17.2
	1-10d Smooth or Screw Shank Nail	7.3	9.8	4.9
	2-10d Smooth or Screw Shank Nails	14.0	18.8	7.4
	1 #8 Screw	30.8	30.8	18.2
	2 #8 Screw	51.7	51.7	24.4
	1-10d Smooth or Screw Shank Nail (Field Clip)	24.3	24.3	24.2
	1-10d Smooth or Screw Shank Nail (Eave Clip)	19.0	19.0	22.1
	2-10d Smooth or Screw Shank Nails (Field Clip)	35.5	35.5	34.8
	2-10d Smooth or Screw Shank Nails (Eave Clip)	31.9	31.9	32.2

Table 6: Attachment Resistance Expressed as a Moment M_f (ft-lbf) for Two Patty Adhesive Set Systems		
Tile Profile	**Tile Application**	**Minimum Attachment Resistance**
Saxony (Shake, Slate and Split Shake) Tile	Adhesive[1]	31.3[2]
1 See manufactures component approval for installation requirements.		
2 Flexible Products Company TileBond Average weight per patty 13.9 grams. 3M™ 2-Component Foam Roof Tile Adhesive AH-160. Average weight per patty 8 grams.		

Table 7: Attachment Resistance Expressed as a Moment - M_f (ft-lbf) for Single Patty Adhesive Set Systems		
Tile Profile	**Tile Application**	**Minimum Attachment Resistance**
Saxony (Shake, Slate and Split Shake) Tile	3M™ 2-Component Foam Roof Tile Adhesive AH-160	118.9[3]
	3M™ 2-Component Foam Roof Tile Adhesive AH-160	40.4[4]
3 Large paddy placement of 45 grams		
4 Medium paddy placement of 24 grams		

Table 8: Attachment Resistance Expressed as a Moment - M_f (ft-lbf) for Mortar or Adhesive Set Systems		
Tile Profile	**Tile Application**	**Attachment Resistance**
Saxony (Shake, Slate and Split Shake) Tile	Mortar Set[5]	43.9
5 Tile-Tite Roof Tile Mortar.		

5. LABELING

All tiles shall bear the imprint or identifiable marking of the manufacturer's name or logo, or following statement: "Miami-Dade County Product Control Approved".

Or BORAL-LIFETILE

BORAL ROOFING LLC, SAXONY TILE (LAKE WALES FL)
LOCATED UNDERNEATH TILE

6. BUILDING PERMIT REQUIREMENTS

6.1 Application for building permit shall be accompanied by copies of the following:

6.1.1 This Notice of Acceptance.

6.1.2 Any other documents required by the Building Official or applicable building code in order to properly evaluate the installation of this system.

PROFILE DRAWINGS

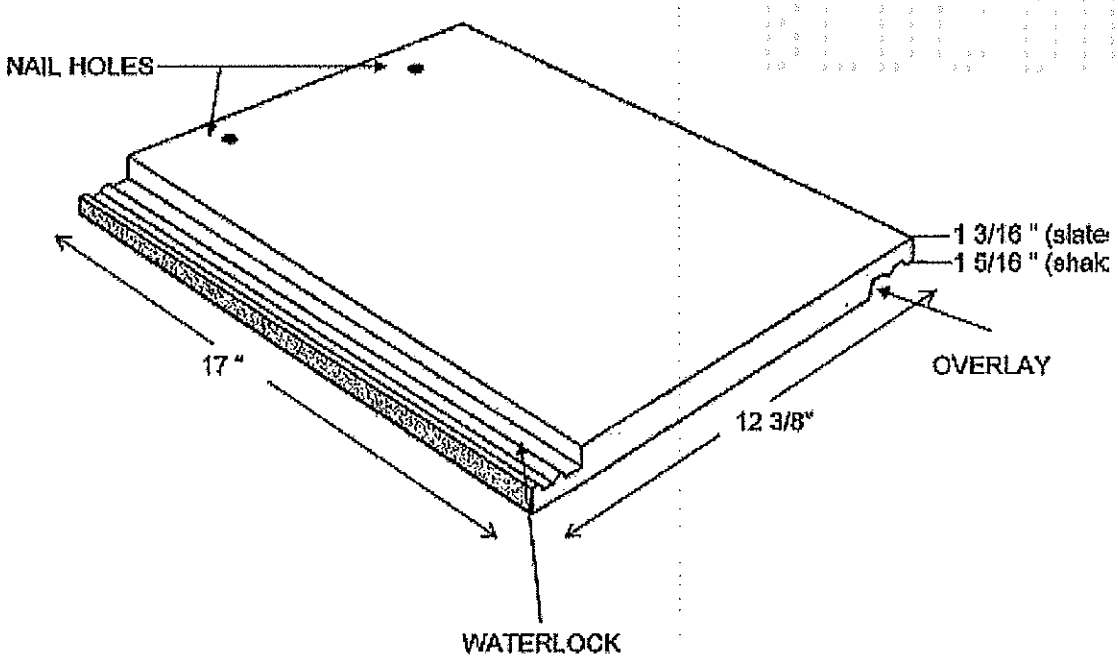

SAXONY CONCRETE ROOF TILE (SLATE MODEL)

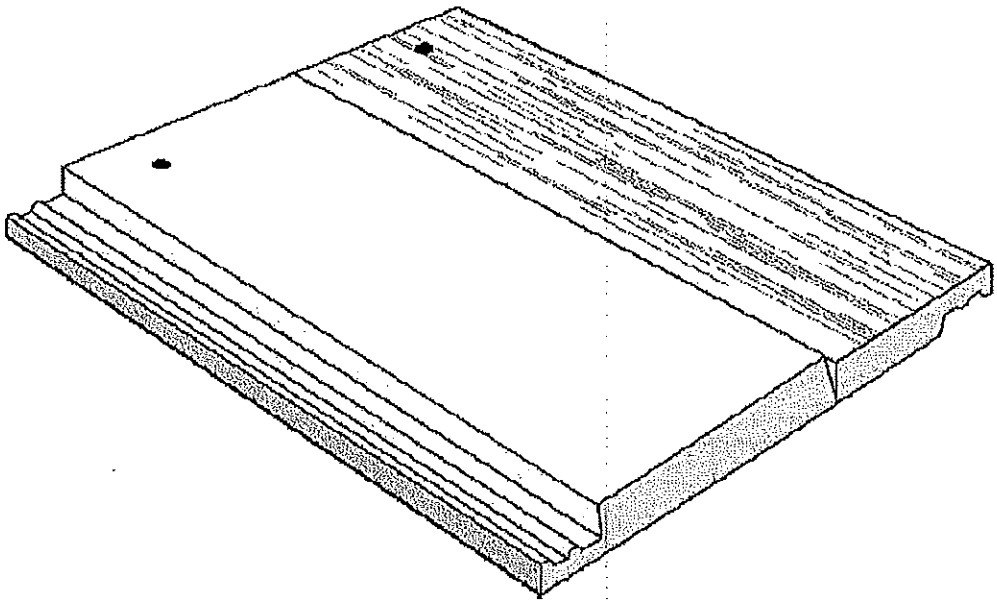

SAXONY CONCRETE ROOF TILE (SPLIT SHAKE MODEL)

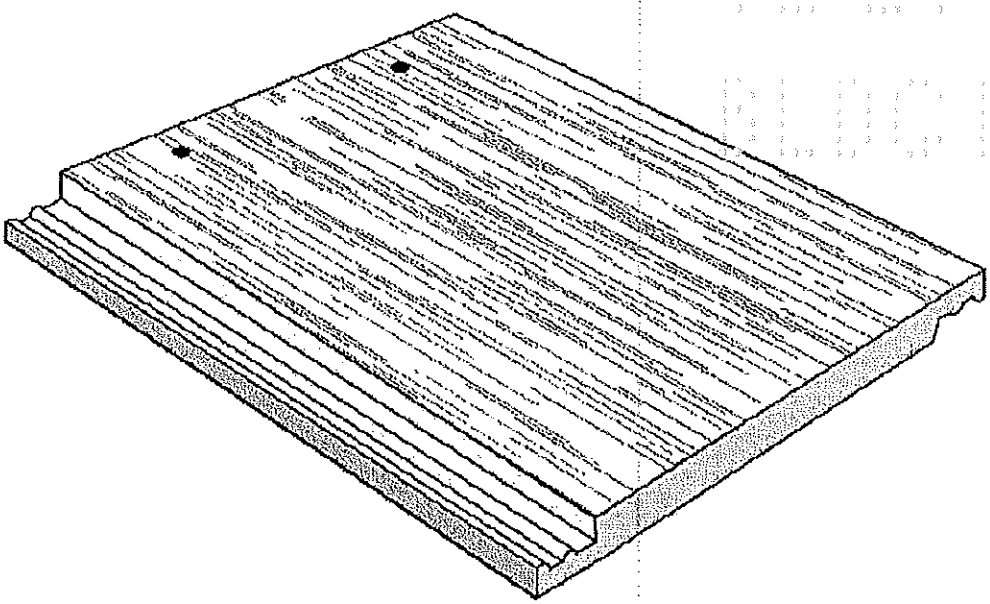

SAXONY CONCRETE ROOF TILE (SHAKE MODEL)

END OF THIS ACCEPTANCE

Section C Page (Low Slope Roof Systems)

Fill in the specific roof assembly components. If a component is not required, insert not applicable (n/a) in the text box.

ROOF SYSTEM MANUFACTURER: GAF

Product Approval (NOA): 13-1022.15 System Type: E

Wind Uplift Pressures, From RAS 128 or Sealed Calculations:

(P1) Field: -42.8 psf

(P2) Perimeters: -71.7 psf

(P3) Corners: -108.0 psf

Maximum Design Pressure From NOA: -52.5 psf

Roof Slope: 0.50 " : 12 Roof Mean Height: 14 ft.

Parapet Walls: ☑ No ☐ Yes Parapet wall Height: NA ft.

Deck Type: --5/8" Plywood--

Support Spacing: NA " o/c

Alternate Deck Type: NA

Existing Roof:
SAME

Fire Barrier:
NA

Vapor Barrier:
NA

Anchor Sheet:
NA

Anchor Sheet Fastener / Bonding Material:
NA

Insulation Base Layer Size & Thickness:
NA

Insulation Base Layer Fastener / Bonding Material:
NA

Insulation Top Layer Size & Thickness:
NA

Insulation Top Layer Fastener / Bonding Material:
NA

Base Sheet(s) & No. of Ply(s):
GAF GLASS BASE 75# (1) PLY

Base Sheet Fastener / Bonding Material:
1-1/4" RS NAIL AND TIN CAP 1-5/8"

Ply Sheet(s) & No. of Ply(s):
GAF PLY IV (2) PLIES

Ply Sheet Fastener / Bonding Material:
HOT MOP ASPHALT

Top Ply:
GAF MINERAL CAP SHEET

Top Ply Fastening / Bonding Material:
HOT MOP ASPHALT

Surfacing: GRANULES

SINGLE PLY MEMBRANE:

Single Ply Manufacturer / Type:
NA

Single Ply Sheet Width: NA " 1/2 Sheet Width: NA "

No. of Single Ply 1/2 sheets: NA

Single Ply Membrane Fastening / Bonding Material:
NA

☑ **FASTENER SPACING FOR BASESHEET ATTACHMENT**

☐ **SINGLE PLY MEMBRANE ATTACHMENT**

1. Field: 9 " o/c @ Laps & 2 rows 9 " o/c
2. Perimeter: 6 " o/c @ Laps & 4 rows 6 " o/c
3. Corner: 6 " o/c @ Laps & 4 rows 6 " o/c

NUMBER OF FASTENERS PER INSULATION BOARD:

1. Field: NA 2. Perimeter: NA 3. Corner: NA

Insulation Fastener Type :
NA

WOOD NAILER TYPE AND SIZE:
1"X 8" FASCIAL

Wood Nailer Fastener Type and Spacing:
#12 WOOD SCREW

EDGE & COPING METAL SIZES:

Edge Metal Material: --Galvanized Metal--

Edge Size: --3" face 26 ga.--

Hook Strip Size: --SELECT EDGE METAL HOOK STRIP SIZE--

Edge Metal Attachment:
1-1/4" RS NAIL 4" OC

Coping Material: --SELECT PARAPET WALL COPING MATERIAL--

Coping Size: --SELECT COPING METAL SIZE OR THICKNESS--

Hook Strip Size: --SELECT COPING METAL HOOK STRIP SIZE--

Parapet Coping Metal Attachment:
NA

Illustrate Components Noted and Details as Applicable:

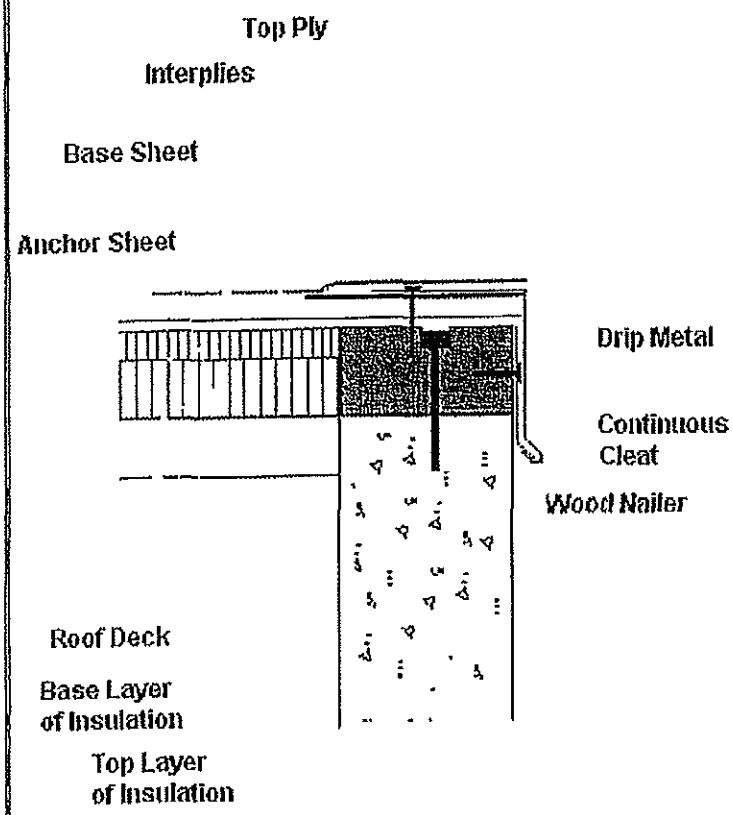

Roof Mean Height: 14 ft.

Drip Metal:
3"x3" galv 26g

Continuous Cleat:
NA

Surfacing:
GRANULES

Top Ply:
GAF MINERAL CAP SHEET

Interplies:
GAF PLY IV

Base Sheet:
GAF GLASSBASE 75 #

Top Layer of Insulation:
NA

Base Layer of Insulation:
NA

Wood Nailer:
1 X 8 FASCIAL BOARD

Wood Nailer Fastening:
#12 WOOD SCREW 16"OC

Anchor Sheet:
NA

Deck Type:
PLYWOOD 5/8"

The use of gypsum board under any of the following Class A, B or C systems does not adversely affect the rating. The use of ¼-in. minimum thick gypsum board is an acceptable alternate for minimum insulation over C-15/32 thick roof decks.

The use of polystyrene insulation board between minimum ¾-in. thick perlite board and deck with rosin paper (perlite/rosin paper/polystyrene/perlite) is a suitable alternate for polyisocyanurate board in the following Class A, B or C systems.

"EnergyGuard® RA" or "Tapered EnergyGuard® RA" or "EnergyGuard® Composite RA" may be substituted for any Atlas polyisocyanurate insulation in any of the following Classifications.

Trumbull "Perma Mop" may be utilized with any of the following "Asphalt Felt Systems with Hot Roofing Asphalt".

"GAFGLAS® #80 Premium Base Sheet" may be used in any of the following systems.

"GAFGLAS® Flex Ply 6" and "Tri-Ply® Ultra-Flexible Ply 6" are suitable alternates to "GAFGLAS® Ply 6".

"GAFTEMP Permalite Recover Board" may be used in lieu of any perlite insulation in any of the following NC Classifications.

Unless otherwise indicated, any of the "Asphalt Felt Systems with Hot Roofing Asphalt" may be surfaced with "Fireshield MB" at 2½ to 3-gal/100-ft^2.

"Ruberoid® Dual Smooth" may be used as an alternate to "Ruberoid® Mop Smooth" or "Ruberoid® 20" or "Ruberoid® 20 HT"

"Ruberoid® Mop Smooth 1.5" may be used as an alternate to "Ruberoid® Mop Smooth"

Class A, B and C

Hot roofing asphalt, for use with organic and glass felts or modified bitumen membranes.

"Ruberoid® Heat Weld" SBS roofing membrane may be used in lieu of "Ruberoid® Mop" SBS products in any applicable Classification.

Class A

1. Deck: C-15/32 **Incline: 3**

Insulation (Optional): — One or more layers perlite or wood fiber or glass fiber or polyisocyanurate or urethane or perlite/polyisocyanurate composite or perlite/urethane composite or wood fiber/polyisocyanurate composite or phenolic, any thickness.
Ply Sheet: — Three or more plies Type G1 or "GAFGLAS® Ply 4" or "Tri-Ply® Ply 4" or "GAFGLAS® Ply 6" hot mopped.
Surfacing: — Gravel.

2. Deck: C-15/32 **Incline: 2**

Insulation (Optional): — One or more layers perlite or wood fiber or glass fiber or polyisocyanurate or urethane or perlite/polyisocyanurate composite or perlite/urethane composite or wood fiber/polyisocyanurate composite or phenolic, any thickness.
Ply Sheet: — Three or more plies Type G1 or "GAFGLAS® Ply 4" or "Tri-Ply® Ply 4" or "GAFGLAS® Ply 6".
Cap Sheet: — One ply Type G3 "GAFGLAS® Mineral Surfaced Cap Sheet" or "Tri-Ply® Mineral Surfaced Cap Sheet " or "GAFGLAS® EnergyCap™ ™ BUR Mineral Surfaced Cap Sheet."

3. Deck: NC **Incline: 2**

Insulation (Optional): — One or more layers perlite, wood fiber, glass fiber, polyisocyanurate, urethane, perlite/polyisocyanurate composite, perlite/urethane composite, wood fiber/polyisocyanurate composite, phenolic, 2-in. maximum.
Ply Sheet: — Two or more plies Type G1 "GAFGLAS® Ply 4", "Tri-Ply® Ply 4" or "GAFGLAS® Ply 6".
Cap Sheet: — One ply Type G3 "GAFGLAS® Mineral Surfaced Cap Sheet" or "Tri-Ply® Mineral Surfaced Cap Sheet" or "GAFGLAS® EnergyCap™" BUR Mineral Surfaced Cap Sheet."

4. Deck: C-15/32 **Incline: 1**

Slip Sheet (Optional): — Red rosin paper, nailed to deck.
Insulation (optional): — Any thickness perlite or wood fiber or glass fiber or polyisocyanurate mechanically fastened or adhered with OMG Inc. "OlyBond Fastening System" or any UL Classified insulation adhesive.
Base Sheet: — One ply Type G2 "GAFGLAS® #75 Base Sheet" or "Tri-Ply® #75 Base Sheet" (may be nailed).
Ply Sheet: — One or more plies Type G1 "GAFGLAS® Ply 4" or "Tri-Ply® Ply 4" or GAFGLAS® Ply 6".
Cap Sheet: — One ply Type G3 "GAFGLAS® Mineral Surfaced Cap Sheet" or "Tri-Ply® Mineral Surfaced Cap Sheet" or "GAFGLAS® EnergyCap™ BUR Mineral Surfaced Cap Sheet."
Surfacing (optional): — "TOPCOAT® EnergyCote™" applied at a rate of 2-gal/100-ft^2.

5. Deck: NC **Incline: 3**

MIAMI-DADE COUNTY
PRODUCT CONTROL SECTION
11805 SW 26 Street, Room 208
Miami, Florida 33175-2474
T (786) 315-2590 F (786) 315-2599
www.miamidade.gov/economy

DEPARTMENT OF REGULATORY AND ECONOMIC RESOURCES (RER)
BOARD AND CODE ADMINISTRATION DIVISION

NOTICE OF ACCEPTANCE (NOA)

GAF
1361 Alps Road
Wayne, NJ 07470

SCOPE:
This NOA is being issued under the applicable rules and regulations governing the use of construction materials. The documentation submitted has been reviewed and accepted by Miami-Dade County RER - Product Control Section to be used in Miami Dade County and other areas where allowed by the Authority Having Jurisdiction (AHJ).

This NOA shall not be valid after the expiration date stated below. The Miami-Dade County Product Control Section (In Miami Dade County) and/or the AHJ (in areas other than Miami Dade County) reserve the right to have this product or material tested for quality assurance purposes. If this product or material fails to perform in the accepted manner, the manufacturer will incur the expense of such testing and the AHJ may immediately revoke, modify, or suspend the use of such product or material within their jurisdiction. RER reserves the right to revoke this acceptance, if it is determined by Miami-Dade County Product Control Section that this product or material fails to meet the requirements of the applicable building code.

This product is approved as described herein, and has been designed to comply with the Florida Building Code including the High Velocity Hurricane Zone of the Florida Building Code.

DESCRIPTION: **GAF Conventional Built-Up Roof Systems for Wood Decks.**

LABELING: Each unit shall bear a permanent label with the manufacturer's name or logo, city, state and following statement: "Miami-Dade County Product Control Approved", unless otherwise noted herein.

RENEWAL of this NOA shall be considered after a renewal application has been filed and there has been no change in the applicable building code negatively affecting the performance of this product.

TERMINATION of this NOA will occur after the expiration date or if there has been a revision or change in the materials, use, and/or manufacture of the product or process. Misuse of this NOA as an endorsement of any product, for sales, advertising or any other purposes shall automatically terminate this NOA. Failure to comply with any section of this NOA shall be cause for termination and removal of NOA.

ADVERTISEMENT: The NOA number preceded by the words Miami-Dade County, Florida, and followed by the expiration date may be displayed in advertising literature. If any portion of the NOA is displayed, then it shall be done in its entirety.

INSPECTION: A copy of this entire NOA shall be provided to the user by the manufacturer or its distributors and shall be available for inspection at the job site at the request of the Building Official.

This NOA renews and revises NOA No. 13-0424.09 and consists of pages 1 through 16.
The submitted documentation was reviewed by Jorge L. Acebo.

MIAMI-DADE COUNTY APPROVED

Membrane Type:	BUR
Deck Type 1:	Wood, Non-insulated
Deck Description:	19/32" or greater plywood or wood plank decks
System Type E:	Base sheet mechanically fastened.

All General and System Limitations shall apply.

Fire Barrier: (optional)	FireOut™ Fire Barrier Coating, VersaShield® Fire Resistant Roof Deck Protection or Securock™ Gypsum Fiber Roof Board.
Base sheet:	GAFGLAS® #80 Ultima™ Base Sheet, Stratavent® Eliminator™ Nailable Venting Base Sheet, Ruberoid® 20, Ruberoid® SBS Heat-Weld™ Smooth or Ruberoid® SBS Heat-Weld™ 25 base sheet mechanically fastened to deck as described below;
Fastening Options:	GAFGLAS® Ply 4, GAFGLAS® FlexPly™ 6, GAFGLAS® #75 Base Sheet or any of above base sheets attached to deck with approved annular ring shank nails and tin caps at a fastener spacing of 9" o.c. at the lap staggered and in two rows 12" o.c. in the field. ***(Maximum Design Pressure –45 psf. See General Limitation #7)***

GAFGLAS® Ply 4, GAFGLAS® FlexPly™ 6, GAFGLAS® #75 Base Sheet or any of above base sheets attached to deck with Drill-Tec™ #12 Fastener or Drill-Tec™ #14 and Drill-Tec™ 3" Steel Plate, Drill-Tec™ AccuTrac® Flat Plate or Drill-Tec™ AccuTrac® Recessed Plate 12" o.c. in 3 rows. One row is in the 2" side lap. The other rows are equally spaced approximately 12" o.c. in the field of the sheet.
(Maximum Design Pressure –45 psf. See General Limitation #7)

GAFGLAS® Flex Ply™ 6, GAFGLAS® #75 Base Sheet or any of above base sheets attached to deck with approved annular ring shank nails and tin caps at a fastener spacing of 9" o.c. at the 4" lap staggered and in two rows 9" o.c. in the field.
(Maximum Design Pressure –52.5 psf. See General Limitation #7)

GAFGLAS® #80 Ultima™ Base Sheet, Ruberoid® 20, Ruberoid® Mop Smooth, base sheet attached to deck with approved 1¼" annular ring shank nails and inverted 3" steel plate at a fastener spacing of 9" o.c. at the 4" lap and in two rows staggered with a fastener spacing of 9" o.c. in the center of the membrane.
(Maximum Design Pressure –60 psf. See General Limitation #7)

GAFGLAS® #75 Base Sheet or any of above base sheets attached to deck with Drill-Tec™ #12 Fastener or Drill-Tec™ #14 Fastener and Drill-Tec™ 3" Steel Plate, Drill-Tec™ AccuTrac® Flat Plate or Drill-Tec™ AccuTrac® Recessed Plate 12" o.c. in 4 rows. One row is in the 2" side lap. The other rows are equally spaced approximately 9" o.c. in the field of the sheet.
(Maximum Design Pressure –60 psf. See General Limitation #7)

Any of above Base sheets attached to deck approved annular ring shank nails and 3" inverted Drill-Tec™ insulation plates at a fastener spacing of 9" o.c. at the 4" lap staggered in two rows 9" in the field.
(Maximum Design Pressure –60 psf. See General Limitation #7)

Fastening Options: (Continued)	GAFGLAS® #75 Base Sheet or any of above base sheets attached to deck with Drill-Tec™ #12 Fastener or Drill-Tec™ #14 Fastener and Drill-Tec™ 3" Steel Plate, Drill-Tec™ AccuTrac® Flat Plate or Drill-Tec™ AccuTrac® Recessed Plate 8" o.c. in 4 rows. One row is in the 2" side lap. The other rows are equally spaced approximately 9" o.c. in the field of the sheet. ***(Maximum Design Pressure –75 psf. See General Limitation #7)***
Ply Sheet:	One or more plies of GAFGLAS® Ply 4 or GAFGLAS® #80 Ultima Base Sheet adhered in a full mopping of approved asphalt applied within the EVT range and at a rate of 20-40 lbs./sq.
Cap Sheet:	(Optional) One ply of GAFGLAS® Mineral Surfaced Cap Sheet or GAFGLAS® EnergyCap™ BUR Mineral Surfaced Cap Sheet adhered in a full mopping of approved asphalt applied within the EVT range and at a rate of 20-40 lbs./sq.
Surfacing:	**Optional on granular surfaced membranes; required for smooth membranes. Chosen components must be applied according to manufacturer's application instructions. All coatings must be listed within a current NOA.** 1. Gravel or slag applied at 400 lbs./sq. and 300 lbs./sq. respectively in a flood coat of approved asphalt at 60 lbs./sq. 2. Topcoat® Surface Seal SB applied at 1to 1.5 gal./sq.
Maximum Design Pressure:	See Fastening Options

WOOD DECK SYSTEM LIMITATIONS:

1. A slip sheet is required with GAFGLAS® Ply 4 and GAFGLAS® Flex Ply™ 6 when used as a mechanically fastened base or anchor sheet.
2. Minimum ¼" DensDeck™ Roof Board or ½" Type X gypsum board is acceptable to be installed directly over the wood deck.

GENERAL LIMITATIONS:

1. Fire classification is not part of this acceptance; refer to a current Approved Roofing Materials Directory for fire ratings of this product.
2. Insulation may be installed in multiple layers. The first layer shall be attached in compliance with Product Control Approval guidelines. All other layers shall be adhered in a full mopping of approved asphalt applied within the EVT range and at a rate of 20-40 lbs./sq., or mechanically attached using the fastening pattern of the top layer
3. All standard panel sizes are acceptable for mechanical attachment. When applied in approved asphalt, panel size shall be 4' x 4' maximum.
4. An overlay and/or recovery board insulation panel is required on all applications over closed cell foam insulations when the base sheet is fully mopped. If no recovery board is used the base sheet shall be applied using spot mopping with approved asphalt, 12" diameter circles, 24" o.c.; or strip mopped 8" ribbons in three rows, one at each sidelap and one down the center of the sheet allowing a continuous area of ventilation. Encircling of the strips is not acceptable. A 6" break shall be placed every 12' in each ribbon to allow cross ventilation. Asphalt application of either system shall be at a minimum rate of 12 lbs./sq. **Note: Spot attached systems shall be limited to a maximum design pressure of -45 psf.**
5. Fastener spacing for insulation attachment is based on a Minimum Characteristic Force (F') value of 275 lbf., as tested in compliance with Testing Application Standard TAS 105. If the fastener value, as field-tested, are below 275 lbf. insulation attachment shall not be acceptable.
6. Fastener spacing for mechanical attachment of anchor/base sheet or membrane attachment is based on a minimum fastener resistance value in conjunction with the maximum design value listed within a specific system. Should the fastener resistance be less than that required, as determined by the Building Official, a revised fastener spacing, prepared, signed and sealed by a Florida Registered Professional Engineer, Registered Architect, or Registered Roof Consultant may be submitted. Said revised fastener spacing shall utilize the withdrawal resistance value taken from Testing Application Standards TAS 105 and calculations in compliance with Roofing Application Standard RAS 117.
7. Perimeter and corner areas shall comply with the enhanced uplift pressure requirements of these areas. Fastener densities shall be increased for both insulation and base sheet as calculated in compliance with Roofing Application Standard RAS 117. Calculations prepared, signed and sealed by a Florida registered Professional Engineer, Registered Architect, or Registered Roof Consultant **(When this limitation is specifically referred within this NOA, General Limitation #9 will not be applicable.)**
8. All attachment and sizing of perimeter nailers, metal profile, and/or flashing termination designs shall conform to Roofing Application Standard RAS 111 and applicable wind load requirements.
9. The maximum designed pressure limitation listed shall be applicable to all roof pressure zones (i.e. field, perimeters, and corners). Neither rational analysis, nor extrapolation shall be permitted for enhanced fastening at enhanced pressure zones (i.e. perimeters, extended corners and corners). **(When this limitation is specifically referred within this NOA, General Limitation #7 will not be applicable.)**
10. All products listed herein shall have a quality assurance audit in accordance with the Florida Building Code and Rule 61G20-3 of the Florida Administrative Code.

END OF THIS ACCEPTANCE

3/10/2016

144st @ 79 ct

Inspection Schedule for wmaltby
Scheduled for March 10, 2016

Corner F/N

Permit#	Address	Folio	Contractor
BRF-2016-2099	14400 SW 79 CT	3350220220040	DADE PROFESSIONAL ROOFING CORP (786) 412-5354

Master Permit#

Owner
ALBIN D &W ODALYS TARRIDE

Description
REROOF FLAT 500 SF AND TILE 3618 FOR TOTAL OF 4118 SF

Type: 700 NOC OK **Time:** 08:00

Notes:

Comments:

Date: 3/10/16 **Signature:**

Type: 760 SHEATHING AFFIDAVIT MITIGATION REPORT **Time:** 08:00

Notes: Submitted Attached

Comments:

Date: 3/10 **Signature:**

Type: 761 TIN CAP/BASE PLY OK **Time:** 08:00

Notes:

Comments:

Date: 3/10/16 **Signature:**

3/10/16 Hot Mop FLAT & Pitch OK

* Time of Inspection

AFFIDAVIT OF COMPLIANCE WITH ROOF DECKING ATTACHMENT AND SECONDARY WATER BARRIER HURRICANE MITIGATION RETROFIT FOR EXISTING SITE-BUILT SINGLE FAMILY RESIDENTIAL STRUCTURES PURSUANT TO SECTION 553.844 F.S.

To: VILLAGE OF PALMETTO BAY
Building & Capital Projects Department
9705 E. Hibiscus Street
Palmetto Bay, FL 33157

Re: Owner's Name Albin Tarride

Property Address 14400 SW 79 CT Palmetto Bay, FL 33158

Roofing Permit Number _____

Dear Building Official:

I Dorian Godoy certify that the roof decking attachment and fasteners have been strengthened and corrected and a secondary water barrier has been provided as required by the "Manual of Hurricane Mitigation Retrofits for Existing Site-Built Single Family Structures" adopted by the Florida Building Commission by Rule 9B-3.047 F.A.C.

Qualifying Agent

_____
Signature of Qualifying Agent

Dorian Godoy
Print Name

STATE OF FLORIDA COUNTY OF MIAMI-DADE

Sworn to and subscribed before me this _____

day of February, 20 16,

(SEAL)

Personally known or Produced Identification

ALEJANDRA BRITO
Notary Public - State of Florida
My Comm. Expires Jun 10, 2018
Commission # FF 101837

* Time of Inspection

AFFIDAVIT OF COMPLIANCE WITH ROOF DECKING ATTACHMENT AND SECONDARY WATER BARRIER HURRICANE MITIGATION RETROFIT FOR EXISTING SITE-BUILT SINGLE FAMILY RESIDENTIAL STRUCTURES PURSUANT TO SECTION 553.844 F.S.

To: VILLAGE OF PALMETTO BAY
Building & Capital Projects Department
9705 E. Hibiscus Street
Palmetto Bay, FL 33157

Re: Owner's Name Albin Tarride

Property Address 14400 SW 79 CT Palmetto Bay, FL 33158

Roofing Permit Number _____

Dear Building Official:

I Dorian Godoy certify that the roof decking attachment and fasteners have been strengthened and corrected and a secondary water barrier has been provided as required by the "Manual of Hurricane Mitigation Retrofits for Existing Site-Built Single Family Structures" adopted by the Florida Building Commission by Rule 9B-3.047 F.A.C.

Qualifying Agent

_____
Signature of Qualifying Agent

Dorian Godoy
Print Name

STATE OF FLORIDA COUNTY OF MIAMI-DADE

Sworn to and subscribed before me this _____

day of February, 20 16

(SEAL)

Personally known
or Produced Identification

ALEJANDRA BRITO
Notary Public - State of Florida
My Comm. Expires Jun 10, 2018
Commission # FF 101837

126 / S / W / 144 st / 79 ct

Inspection Schedule for jgarcell
Scheduled for March 28, 2016

Permit#	Address	Folio	Contractor
BRF-2016-2099	14400 SW 79 CT	3350220220040	DADE PROFESSIONAL ROOFING CORP (786) 412-5354

Master Permit#

Owner
ALBIN D &W ODALYS TARRIDE

Description
REROOF FLAT 500 SF AND TILE 3618 FOR TOTAL OF 4118 SF

Previous:	Action	Description	Complete	Result	Staff
	700	NOC	3/10/16 7:57 ar	apprve	jgarcell
	760	SHEATHING AFFIDAVIT MITIGATION REPORT	3/10/16 7:57 ar	apprve	jgarcell
	761	TIN CAP/BASE PLY approved	3/10/16 7:57 ar	apprve	jgarcell
	762	HOT MOP/ SELF-ADHERING hot mop ans flat & pitch ok	3/10/16 7:57 ar	apprve	jgarcell

Type: 763 INSTALLATION/IN-PROGRESS TILE **Time:** 08:00

Notes:

Comments:

Date: 3/28/16 **Signature:**

144st / 79ct
corner
F/N
F/E

Inspection Schedule for jgarcell
Scheduled for April 05, 2016

Permit#	Address	Folio	Contractor
BRF-2016-2099	14400 SW 79 CT	3350220220040	DADE PROFESSIONAL ROOFING CORP (786) 412-5354

Master Permit#

Owner
ALBIN D &W ODALYS TARRIDE

Description
REROOF FLAT 500 SF AND TILE 3618 FOR TOTAL OF 4118 SF

Previous:	Action	Description	Complete	Result	Staff
	700	NOC	3/10/16 7:57 ar	apprve	jgarcell
	760	SHEATHING AFFIDAVIT MITIGATION REPORT	3/10/16 7:57 ar	apprve	jgarcell
	761	TIN CAP/BASE PLY approved	3/10/16 7:57 ar	apprve	jgarcell
	762	HOT MOP/ SELF-ADHERING hot mop ans flat & pitch ok	3/10/16 7:57 ar	apprve	jgarcell
	763	INSTALLATION/IN-PROGRESS approved tile in progress	3/28/16 8:14 ar	apprve	jgarcell

Type: 736 SKYLIGHTS N/A **Time:** 08:00

Notes:

Comments:

Date: **Signature:**

Type: 762 HOT MOP/ SELF-ADHERING **Time:** 08:00

03/11/2016 **Notes:** hot mop ans flat & pitch ok

on 3/16/16

Comments:

Date: 4/5/16 **Signature:**

Inspection Schedule for jgarcell
Scheduled for April 05, 2016

Permit#	Address	Folio	Contractor
BRF-2016-2099	14400 SW 79 CT	3350220220040	DADE PROFESSIONAL ROOFING CORP (786) 412-5354

Master Permit#

Owner
ALBIN D &W ODALYS TARRIDE

Description
REROOF FLAT 500 SF AND TILE 3618 FOR TOTAL OF 4118 SF

Type: 764 ROOF FINAL **Time:** 08:00

Notes: ok

Comments:

Date: 4/5/16 **Signature:**

Type: 785 ENG P.E LAB TILE UPLIFT TEST **Time:** 08:00

Notes: Submitted (Attached)

Comments:

Date: 4/5/16 **Signature:**

INSPECTION A-1 SERVICE
ENGINEERING
7066 SW 44th Street Miami, FL 33155
Tel: 786-398-9179 Fax: 786-800-2627
a1roofinspection@gmail.com

LAB CERTIFICATION #10-0512-01
SITE SPECIFIC INFORMATION
UPLIFT TEST – TAS #106

Roofing Contractor DADE PROFESSIONAL ROOFING. Permit # BRF-2016-2099

Job Address 14400 SW 79 CT VILLAGE OF PALMETTO BAY, FL.

Owner's Name TARRIDE, ALBIN D & W ODALYS.

Type of Tile TARRIDE, ALBIN D. W ODALYS Date Installed

Approximate Roof Height 14' feet Roof Pitch 3/12 Type of Access to Roof LADDER

Approximate Square Footage of Roof 37.0 ft^2 Required Testing Force 35 Lbs

Date Tested 04/02/16 Number of Tests 74 Testing Equipment F.G.E.100

Contact Name FRANCISCO Phone # 305-781-7793

LOCATION	# OF TEST	PASS	# OF TEST	FAIL
Corner	7 Tests	7 Pass	Test	0 Fail
Perimeter	16 Tests	16 Pass	Test	0 Fail
Field	37 Tests	37 Pass	Test	0 Fail
Ridge	14 Tests	14 Pass	Test	0 Fail
TOTAL	74 Tests	74 Pass	Test	0 Fail

IN ACCORDANCE WITH THE CRITERIA OF PROTOCOL PA 106, THIS ROOF ASSEMBLY HAS PASSED THE STATIC UPLIFT QUALITY CONTROL TEST. THIS TAS 106 TEST HAS BEEN PERFORMED IN FULL ACCORDANCE TO THE REQUIREMENTS OF DADE COUNTRY, WITH NO DEVIATIONS. THIS REPORT IS NOT GUARANTEED IN CASE OF CASE OF NATURAL DISASTERS. THIS REPORT IT IS NOT VALID FOR INSURANCE CLAIMS.

YENAN T. LEYVA
P.E. # 67416

A-1 Engineering Inspection Services, Inc
7066 SW 44th Street Miami, FL 33155
Tel: 786-398-9179 Fax: 786-800-2627
a1roofinspection@gmail.com
LAB CERTIFICATION # 14-1215.04

04/02/16
PERMIT. #BRF-2016-2099
14400 SW 79 CT
VILLAGE OF PALMETTO BAY, FL.

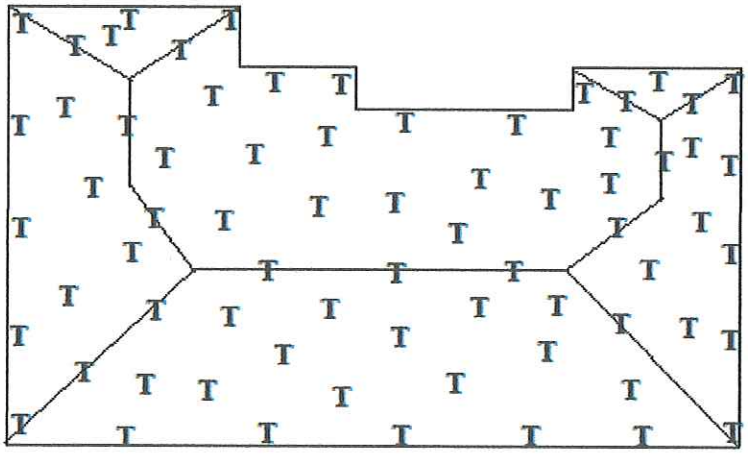

INSPECTION A-1 SERVICE
ENGINEERING
7066 SW 44th Street Miami, FL 33155
Tel: 786-398-9179 Fax: 786-800-2627
a1roofinspection@gmail.com

LAB CERTIFICATION #10-0512-01
SITE SPECIFIC INFORMATION
UPLIFT TEST – TAS #106

Roofing Contractor DADE PROFESSIONAL ROOFING.

Permit # BRF-2016-2099

Job Address 14400 SW 79 CT VILLAGE OF PALMETTO BAY, FL.

Owner's Name TARRIDE, ALBIN D & W ODALYS.

Type of Tile TARRIDE, ALBIN D. W ODALYS

Date Installed

Approximate Roof Height 14' feet

Roof Pitch 3/12

Type of Access to Roof LADDER

Approximate Square Footage of Roof 37.0 ft^2

Required Testing Force 35 Lbs

Date Tested 04/02/16

Number of Tests 74

Testing Equipment F.G.E.100

Contact Name FRANCISCO

Phone # 305-781-7793

LOCATION	# OF TEST	PASS	# OF TEST	FAIL
Corner	7 Tests	7 Pass	Test	0 Fail
Perimeter	16 Tests	16 Pass	Test	0 Fail
Field	37 Tests	37 Pass	Test	0 Fail
Ridge	14 Tests	14 Pass	Test	0 Fail
TOTAL	74 Tests	74 Pass	Test	0 Fail

IN ACCORDANCE WITH THE CRITERIA OF PROTOCOL PA 106, THIS ROOF ASSEMBLY HAS PASSED THE STATIC UPLIFT QUALITY CONTROL TEST. THIS TAS 106 TEST HAS BEEN PERFORMED IN FULL ACCORDANCE TO THE REQUIREMENTS OF DADE COUNTRY, WITH NO DEVIATIONS. THIS REPORT IS NOT GUARANTEED IN CASE OF CASE OF NATURAL DISASTERS. THIS REPORT IT IS NOT VALID FOR INSURANCE CLAIMS.

YENAN T. LEYVA
P.E. # 67416

PAID
04/04/16
$110.00

A-1 Engineering Inspection Services, Inc
7066 SW 44th Street Miami, FL 33155
Tel: 786-398-9179 Fax: 786-800-2627
a1roofinspection@gmail.com
LAB CERTIFICATION # 14-1215.04

04/02/16
PERMIT. #BRF-2016-2099
14400 SW 79 CT
VILLAGE OF PALMETTO BAY, FL.

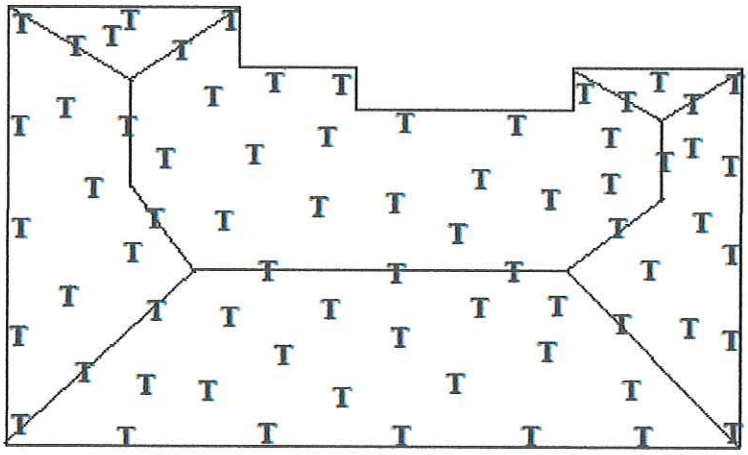

BRF 2016-2099

14400 SW 79 Ct

OFFICE COPY

VILLAGE OF PALMETTO BAY

...PY OF PLAN MUST BE AVAILABLE ON ...ITE OR NO INSPECTION WILL BE GIVEN

	APPROVED		DISAPPROVED	
	BY	DATE	BY	DATE
	DRS	2/23/16		

...no compliance with all Federal, State and County ...ies and regulations. The Village of Palmetto Bay ...es no responsibility for accuracy of all results of these plans.

...ly in addition to the requirements of these permits ...r be additional restrictions applicable to this ... public record of this county and village.

Permit Action Report
VILLAGE OF PALMETTO BAY

Permit #: BRF-2016-2099
Master permit #:

Permit type: btile - TILE ROOF
Routing queue: b7 - FLAT ROOF /LOW SLOPE

Address: 14400 SW 79 CT
PALMETTO BAY, FL 33158

Group # - Name	Action Code	Action Description	Completion Date	Completion Code	Completed By	Comments
1 - PERMIT COUNTER	intake	APPLICATION INTAKE	2/16/2016		ahewlett	
1 - PERMIT COUNTER	cuff	COLLECT UPFRONT FEE	2/16/2016		ahewlett	
2 - PLANS PROCESSING	routeplans	ROUTE PLANS FOR REVIEW	2/16/2016		ahewlett	
3 - BUILDING REVIEW	brev	BUILDING REVIEW	2/23/2016	apprve	ogarcia	02.23.15 building approved Orestes Garcia gb
4 - PLANS PROCESSING	compcomn	COMPILE COMMENTS	2/23/2016		gbilbraut	
4 - PLANS PROCESSING	notifycust	NOTIFY CUSTOMER	2/23/2016		gbilbraut	
5 - PERMIT COUNTER	verifycont	VERIFY CONTRACTOR	2/23/2016		gbilbraut	
6 - PLANS PROCESSING	notifycust	NOTIFY CUSTOMER	2/23/2016		gbilbraut	
7 - PERMIT COUNTER	collissue	COLLECT FEES/ISSUE PERMIT	2/24/2016	compl	ahewlett	
8 - INSPECTIONS	700	NOC	3/10/2016	apprve	jgarcell	
8 - INSPECTIONS	760	SHEATHING AFFIDAVIT MITIGATION	3/10/2016	apprve	jgarcell	
8 - INSPECTIONS	761	TIN CAP/BASE PLY	3/10/2016	apprve	jgarcell	approved
8 - INSPECTIONS	762	HOT MOP/ SELF-ADHERING	3/10/2016	apprve	jgarcell	hot mop ans flat & pitch ok
8 - INSPECTIONS	763	INSTALLATION/IN-PROGRESS	3/28/2016	apprve	jgarcell	approved tile in progress
8 - INSPECTIONS	736	SKYLIGHTS	4/5/2016	n/a	jgarcell	
8 - INSPECTIONS	785	ENG P.E LAB TILE UPLIFT TEST	4/5/2016	apprve	jgarcell	
8 - INSPECTIONS	764	ROOF FINAL	4/5/2016	apprve	jgarcell	approved