Village of Palmetto Bay

Inspection Report

Permit Number B-2005-1860

b
19

InspectNo	Date	Type	Status	Required Steps	Inspector
INS-2005-10528	04/14/05	Building	Denied	1. NOC. MUST BE REQUESTED AT DADE COUNTY OFFICE 2. MISSING TIE DOWN @ BATH WINDOW'S SIDE AND 48" APART 3. MISSING INSIDE CORNER BAR @ N.E. AND S.E. CORNER 4. ATTACHED SOIL STATEMENT FOUNDATION/FOOTING	ANGEL RIVAS
INS-2005-10566	04/15/05	Building	Approved	OK. NOC OK. FOUNDATION/FOOTING	ANGEL RIVAS
INS-2005-11423	05/20/05	Building	Approved	1. ATTACHED COMPACTION TEST . 2. TERMITE TREATMENT-- 3 PAGES TIE-BEAM/REINFORCING/COLUMNS SLAB	ANGEL RIVAS
INS-2005-11860	06/08/05	Building	Approved	SHEATHING ONLY ROOFTRUSS/PERMBRACING/SHEATH	ANGEL RIVAS
INS-2005-12063	06/15/05	Building	Approved	LATHING/FIREWALL/DRYWALL	ANGEL RIVAS
INS-2005-14196	09/02/05	Building	Denied	CUT STUDS	ANGEL RIVAS
INS-2005-14295	09/09/05	Building	Approved		ANGEL RIVAS
INS-2005-14402	09/14/05	Building	Approved	INSULATION	ANGEL RIVAS

InspectNo	Date	Type	Status	Required Steps	Inspector
INS-2005-15039					
	10/12/05	Building	Approved		ANGEL RIVAS
				LATHING/FIREWALL/DRYWALL	

Village of Palmetto Bay Permit Application

Department of Building & Capital Projects
9705 E. Hibiscus Street
Palmetto Bay, Florida 33157
Phone: (305) 259-1250 Fax: (866) 927-5576 Inspections: (305) 259-1253

Renewal

GENERAL INFORMATION: Please read these instructions carefully before submitting the work for review

This application must be completed and signed by both the property owner and qualifier. Both of these signatures must be notarized. Please print legibly or type in order not to delay your application. For roofing permits, in addition to this permit you must also fill out a roofing permit application. Express permits require an additional fee and will only be accepted between the hours of 8:00 A.M. and 10:00 A.M., Monday through Friday. All other permits/plans must be dropped off before 4:30 p.m. for regular processing. During the processing of your application you may be asked to submit additional information. There may be additional permits and reviews required from other governmental agencies not affiliated with Palmetto Bay.

APPLICATION:

Clerk's Initials	Plan Process Number	Master Permit Number	Subsidiary Permit Number(s)	Expiration Date
SV	BLD-2011-0690	B-2005-1860	BCV-2012-0030	

Job Address: 18321 SW 87th Avenue (Address) Miami (City) FL (State) 33157 (Zip Code)
Unit number:

Folio Number: 33-5034014028O
Lot: 4 Block: 85
Subdivision: Sect. 22 Bel-Air PB: 96 PG: 5
Current Use of Property:
Proposed Use of Property:
Description of Work: Bedroom extension & bath. and to convert existing garage into gameroom
Zoning: Square Feet: 375.
Tenant Information: Unit Number:

Linear Feet: Units: Stories:
Value of Proposed Work: 40,000 Est. Bldg. Value:
Tax Assessed Value:
Flood Zone: Base Floor Elev.:
Homeowner's Association:

I affirm that there ☐ are or ☐ are no restrictive covenants associated with the underlying property that would affect the pending application. Failure to disclose this information shall result in the immediate revocation of any type of permit or certificate of use/occupancy.

Check Permit Type		Check Permit Change		Check Type of Improvement			
Building		Change of Contractor		New Construction		Deck/Concrete flatwork	
Electrical		Permit Renewal	✓	Exterior Alteration		Window Replacement	
Mechanical		Plan Revision		Interior Alteration		Shutters	
Plumbing		Permit Extension		Attached Addition		Garage Doors	
LPGX		Supplement		Detached Addition		Storage Shed	
Roofing		Re-inspection Fee		Repair		Railings	
Fence				Repair due to Fire		Stairs	
Sign				Demolish		Windows/Doors	
Public Works				Screen Enclosure		Roofing	
Other				Driveway		Re-Roof	
				Fence		Seal-cote	
				Pool		Other	

(Exp 4/10/06.)

Architect Information	Engineer Information
Name:	Name:
License Number:	License Number:
Address:	Address:
Telephone Number:	Telephone Number:
Fax Number:	Fax Number:
Other:	Other:

Property Owner	Contractor
Name: Michelina Torres	Company Name P & H Additions, Inc.
Address: 18321 SW 87th Avenue	Qualifier (Leone) Valladares
Home Telephone:	License Number CGC004647
Business Telephone:	Address 3100 NW 72nd Ave #129 Miami, Fl 33122
Other Telephone: (305)726-4928	Telephone Number (305) 4189433
Fax Number:	Fax Number (305) 418-9435
Does Property have Homestead Exemption	Phone Number for Pick Up (305) 418-9433 786-367-4156. Leo.

Bond Company (if applicable)	Mortgage Lender
Name:	Name:
Address:	Address:
City: State: Zip	City: State: Zip

Classification Of Proposed Work
Residential ☐ Duplex ☐ Townhouse ☐ Multi Family ☐ Commercial ☐ Industrial ☐ Other ☐
Effective Code_____ Occupancy_____ Construction Type _____
Zoning: Variance Number: Remarks:

OWNER AFFIDAVIT

Application is hereby made to obtain a permit to do the work and installation as indicated. I certify that no work or installation has commenced prior to the issuance of a permit and that all work will be performed to meet the standards of all laws regulating construction in this jurisdiction. I understand that a separate permit must be secured for **ELECTRICAL, MECHANICAL, PLUMBING, SIGNS, WELLS, POOLS, ROOFING, SHUTTERS, WINDOWS, FURNACES, BOILERS, HEATERS, TANKS, FENCE, DRIVEWAYS and AIR CONDITIONERS, ETC.** In addition to the requirements of this permit, there may be additional restrictions found in the Public Records, and there may be additional permits required from other governmental entities.

I, the owner of the property, have disclosed all information related to any work that has been performed in the prior twelve months to the Building Division as part of this application. Further, I am fully aware that if the cumulative cost of work to my home or business under this and any other permit equals or exceeds fifty percent of the fair market value of the structure, the entire structure must meet the present federal flood criteria for finished floor elevation. I am also fully aware that if the cost of work to my home or business under this and any other permit equals or exceeds fifty per cent of the replacement cost of the structure, then the entire structure must conform to current code requirements of the Florida Building Code.

I, the owner of the property, understand that a permit application is subject to denial and a validated permit or permit card is subject to revocation or modification based upon applicable deeds, covenants, declarations, easements and any other legal restriction. By issuing a permit, the Village of Palmetto Bay makes no representation as to the existence or validity of any property restriction.

I, the owner of the property certify that all the foregoing information is accurate and that all work will be done in compliance with all applicable laws regulating construction and zoning.

WARNING TO OWNER: YOUR FAILURE TO RECORD A NOTICE OF COMMENCEMENT MAY RESULT IN YOUR PAYING TWICE FOR IMPROVMENTS TO YOUR PROPERTY. A NOTICE OF COMMENCEMENT MUST BE RECORDED AND POSTED ON THE JOB SITE BEFORE THE FIRST INSPECTION. IF YOU INTEND TO OBTAIN FINANCING, CONSULT WITH YOUR LENDER OR AN ATTORNEY BEFORE COMMENCING WORK OR RECORDING YOUR NOTICE OF COMMENCEMENT.

Signature of Owner

State of Florida, County of Dade

Sworn to (or affirmed) and subscribed before this 08 day of August, 20 11 by (print name) Michelina Torres

Notary Name Brenda Dubon

Personally known or I.D.

Type of identification produced:

BRENDA DUBON
MY COMMISSION #DD715995
EXPIRES: OCT 08, 2011
Bonded through 1st State Insurance

Signature of Qualifier

State of Florida, County of Dade

Sworn to (or affirmed) and subscribed before this 05 day of August, 20 11 by (print name) Leonet Valladares

Notary Name Brenda Dubon

Personally known or I.D.

Type of identification produced:

BRENDA DUBON
MY COMMISSION #DD715995
EXPIRES: OCT 08, 2011
Bonded through 1st State Insurance

IMPORTANT NOTICES

- Do not begin work without receiving you validated permit and permit card. Applying for a permit does not grant you the right to commence construction. Construction can only occur during the hours of 7:00 a.m. to 7:00 p.m., Monday thru Saturday and from the hours of 9:00 a.m. to 6:00 p.m. on Sundays and Federal holidays.
- All construction sites must be maintained in a clean and orderly condition free from construction debris. Failure to do so will result in a fine and a suspension of inspections until said property is cleaned.
- Streets and neighboring properties shall be kept free from dirt and debris.
- Swales must be protected from damage by equipment or vehicles and sidewalks cannot be blocked.
- Portable Toilets for construction jobs require a separate permit. If toilet is not available the inspection will not be performed.
- Water cannot be discharged into the right of way or storm drains without the approval of the Public Works Department.
- No equipment or materials can be stored on the right of way; they must only be stored on your property.
- Florida Department of Health approval is required for applications involving Septic Tanks. Department of Environmental Resources Management (DERM) and /or Miami-Dade Water and Sewer Department approval is required for applications involving sewers and water. The tree section of the Department of Environmental Resources Management (DERM) approval is required on all landscape plans and on all tree removal applications.

CHECKLIST (OFFICE USE ONLY)

- ☐ OWNER-BUILDER FORM (Attached)
- ☐ FIRE DEPARTMENT APPROVAL (Commercial/multi (family only)
- ☐ CONCURRENCY (New Construction)
- ☐ PROOF OF OWNERSHIP (Attached)
- ☐ CONDO ASSOCIATION APPROVAL
- ☐ UPFRONT FEES AMOUNT: N/A
- ☐ HEALTH DEPARTMENT APPROVAL (Septic/Sewer)
- ☐ IMPACT FEE (New Construction)
- ☐ SCHOOL REVIEW (New Construction)
- ☐ DERM REVIEW (New Construction/Additions/Tree Removal)
- ☐ PUBLIC WORKS
- ☐ PERMIT CLERK REVIEW By: _____
  - ☑ Complete Application
  - ☑ Current liability ins.
  - ☑ Worker's Comp.
  - ☑ Cont. Lic. Check
- ☐ OTHER (Specify and Attach)
- ☐ FLORIDA DEPARTMENT OF BUISNESS AND PROFESSIONAL REGULATION APPROVAL (RESTAURANTS)

PERMIT FEES (OFFICE USE ONLY)

Scanning Fees Small (1.85 per sheet)	1.85	**Art in Public Places**	
Scanning Fees Large (3.50 per sheet)		**Certificate of Use and Occupancy**	
Village of Palmetto Bay Permit Fees	225.00	**Concurrency Fee** (7.35%)	
Miami-Dade County Fees (sq. ft. x $65//1000x0.60)		**Technology Fee** (6.3%)	
Flood Zone Review	100.00	**Zoning Inspection Fee** (157.50 per application)	157.50
Radon-Inspector State Educational Fund and DCA State fee	6.76	**Administration Fee**	
Code Enforcement Fine		**Express Fee** (25.00)	
Certificate of Completion		**Public Works Fee**	
Construction Sign Fee		**Landscape Review Fee** (175.00 per hour)	
Roll-off Waste Container Fee (105.00 per container site)		**Special Review Fee** (89.25 per hour)	
Rework Fee		**Other**	

$491.11

PLAN REVIEWER APPROVAL AREA (OFFICE USE ONLY)

SECTION	REVIEWER APPROVAL'S NAME	APPROVAL DATE	REJECTED DATE NUMBER 1	REJECTED DATE NUMBER 2	REJECTED DATE NUMBER 3
COMMUNITY DEVELOPMENT					
ZONING					
ELECTRICAL					
MECHANICAL					
PLUMBING					
FIRE					
ROOFING					
PUBLIC WORKS					
PLANNING					
STRUCTURAL					
BUILDING					
BUILDING OFFICIAL					

REWORKS: A fee of **$105.50** may be charged for failure to make required corrections previously indicated. The fee shall be charged after the initial review plus one follow up review per trade. Please note that Florida Statutes 553.80 section 2(b) states "with respect to evaluation of design professionals documents, if a local government finds it necessary, in order to enforce compliance with the Florida Building Code and issue a permit, to reject design documents required by the code three or more times for failure to correct a code violation specifically noted in each rejection, including but not limited to egress, fire protection, structural stability, energy, accessibility, lighting, ventilation, electrical, mechanical, plumbing, and gas systems, or other requirements identified by rule of the Florida Building Commission adopted pursuant to Chapter 120, the local government shall impose, each time after third such review the plans are rejected for that code violation a fee of **four times the amount** of the proportion of the permit fee attributed to plans review".

ISSUING OFFICIAL

FINAL PLAN REVIEWED AND PREPARED FOR ISSUANCE BY: AL DATE: 8/23/11

CONDITIONS OF APPROVAL

PLAN TRACKING

Plans Checked out	Date	Clerk	Plans Checked in	Date	Clerk

FORM 600A-2001

FLORIDA ENERGY EFFICIENCY CODE FOR BUILDING CONSTRUCTION

Florida Department of Community Affairs

Residential Whole Building Performance Method A

Project Name:	TORRES RESIDENCE	Builder:	
Address:	18321 SW 8TH AVE	Permitting Office:	MIAMI-DADE
City, State:	MIAMI, FL	Permit Number:	
Owner:	MR & MRS TORRES	Jurisdiction Number:	231000
Climate Zone:	South		

1. New construction or existing		New	__
2. Single family or multi-family		Single family	__
3. Number of units, if multi-family		1	__
4. Number of Bedrooms		4	__
5. Is this a worst case?		No	__
6. Conditioned floor area (ft²)		1855 ft²	
7. Glass area & type	Single Pane	Double Pane	__
a. Clear glass, default U-factor	304.4 ft²	0.0 ft²	__
b. Default tint	0.0 ft²	0.0 ft²	__
c. Labeled U or SHGC	0.0 ft²	0.0 ft²	
8. Floor types			__
a. Slab-On-Grade Edge Insulation		R=0.0, 275.0(p) ft	__
b. N/A			__
c. N/A			
9. Wall types			__
a. Concrete, Int Insul, Exterior		R=4.1, 970.0 ft²	__
b. Concrete, Int Insul, Exterior		R=0.0, 1110.0 ft²	__
c. N/A			__
d. N/A			__
e. N/A			
10. Ceiling types			__
a. Under Attic		R=19.0, 1855.0 ft²	__
b. N/A			__
c. N/A			
11. Ducts			__
a. Sup: Unc. Ret: Unc. AH: Interior		Sup. R=6.0, 132.0 ft	__
b. N/A			

12. Cooling systems		
a. Central Unit	Cap: 51.5 kBtu/hr	__
	SEER: 14.15	__
b. N/A		__
		__
c. N/A		__
		__
13. Heating systems		
a. Electric Strip	Cap: 34.0 kBtu/hr	__
	COP: 1.00	__
b. N/A		__
		__
c. N/A		__
		__
14. Hot water systems		
a. Electric Resistance	Cap: 50.0 gallons	__
	EF: 0.86	__
b. Electric Resistance	Cap: 1.0 gallons	__
	EF: 0.97	__
c. Conservation credits (HR-Heat recovery, Solar DHP-Dedicated heat pump)		__
15. HVAC credits (CF-Ceiling fan, CV-Cross ventilation, HF-Whole house fan, PT-Programmable Thermostat, MZ-C-Multizone cooling, MZ-H-Multizone heating)	PT,	__

Glass/Floor Area: 0.16

Total as-built points: 29955

Total base points: 32356

PASS

I hereby certify that the plans and specifications covered by this calculation are in compliance with the Florida Energy Code.

PREPARED BY: _____

DATE: JAN 26 2005

I hereby certify that this building, as designed, is in compliance with the Florida Energy Code.

OWNER/AGENT: _____

DATE: _____

Review of the plans and specifications covered by this calculation indicates compliance with the Florida Energy Code. Before construction is completed this building will be inspected for compliance with Section 553.908 Florida Statutes.

GREAT SEAL OF THE STATE OF FLORIDA — IN GOD WE TRUST

BUILDING OFFICIAL: _____

DATE: _____

WINTER CALCULATIONS

Residential Whole Building Performance Method A - Details

ADDRESS: **18321 SW 8TH AVE, MIAMI, FL,** PERMIT #:

BASE

GLASS TYPES

.18 X Conditioned Floor Area	X BWPM	= Points
.18 1855.0	2.36	788.0

WALL TYPES	Area	X BWPM	= Points
Adjacent	0.0	0.00	0.0
Exterior	2080.0	0.60	1248.0
Base Total:	**2080.0**		**1248.0**

DOOR TYPES	Area	X BWPM	= Points
Adjacent	0.0	0.00	0.0
Exterior	40.0	1.80	72.0
Base Total:	**40.0**		**72.0**

CEILING TYPES	Area	X BWPM	= Points
Under Attic	1855.0	0.10	185.5
Base Total:	**1855.0**		**185.5**

FLOOR TYPES	Area	X BWPM	= Points
Slab	275.0(p)	-2.1	-577.5
Raised	0.0	0.00	0.0
Base Total:			**-577.5**

INFILTRATION	Area	X BWPM	= Points
	1855.0	-0.06	-111.3

AS-BUILT

Type/SC	Overhang Ornt	Len	Hgt	Area	X WPM	X WOF	= Points
Single, Clear	N	2.0	8.3	40.0	6.03	0.99	239.4
Single, Clear	S	2.0	5.2	28.0	4.49	1.07	135.1
Single, Clear	S	6.2	3.0	51.0	4.49	1.43	328.1
Single, Clear	E	2.0	8.3	80.0	4.77	1.02	389.4
Single, Clear	E	2.0	8.3	20.0	4.77	1.02	97.4
Single, Clear	E	2.0	4.2	10.3	4.77	1.05	51.4
Single, Clear	E	2.0	3.2	7.1	4.77	1.06	36.0
Single, Clear	W	2.0	5.2	19.0	5.49	1.00	104.6
Single, Clear	W	2.0	4.2	15.0	5.49	1.01	82.9
Single, Clear	W	2.0	6.2	34.0	5.49	1.00	186.7
As-Built Total:				**304.4**			**1651.0**

Type	R-Value	Area	X WPM	= Points
Concrete, Int Insul, Exterior	4.1	970.0	1.03	1003.9
Concrete, Int Insul, Exterior	0.0	1110.0	1.90	2109.0
As-Built Total:		**2080.0**		**3112.9**

Type	Area	X WPM	= Points
Exterior Wood	40.0	2.80	112.0
As-Built Total:	**40.0**		**112.0**

Type	R-Value	Area	X WPM X WCM	= Points
Under Attic	19.0	1855.0	0.14 X 1.00	259.7
As-Built Total:		**1855.0**		**259.7**

Type	R-Value	Area	X WPM	= Points
Slab-On-Grade Edge Insulation	0.0	275.0(p	-2.10	-577.5
As-Built Total:		**275.0**		**-577.5**

	Area	X WPM	= Points
	1855.0	-0.06	-111.3

3

WINTER CALCULATIONS

Residential Whole Building Performance Method A - Details

ADDRESS: 18321 SW 8TH AVE, MIAMI, FL, PERMIT #:

BASE				AS-BUILT							
Winter Base Points:			1604.7	Winter As-Built Points:							4446.8
Total Winter Points	X System Multiplier	=	Heating Points	Total Component	X Cap Ratio	X Duct Multiplier (DM x DSM x AHU)	X System Multiplier	X Credit Multiplier	=	Heating Points	
1604.7	0.6274		1006.8	4446.8 4446.8	1.000 1.00	(1.099 x 1.137 x 0.91) 1.137	1.000 1.000	0.950 0.950		4803.7 4803.7	

FORM 600A-2001

WATER HEATING & CODE COMPLIANCE STATUS

Residential Whole Building Performance Method A - Details

ADDRESS: **18321 SW 8TH AVE, MIAMI, FL,** PERMIT #:

BASE					AS-BUILT							
WATER HEATING												
Number of Bedrooms	X	Multiplier	=	Total	Tank Volume	EF	Number of Bedrooms	X	Tank Ratio	X Multiplier	X Credit Multiplier	= Total
4		2369.00		9476.0	50.0	0.86	4		0.98	2424.09	1.00	9506.2
					1.0	0.97	4		0.02	2149.20	1.00	168.6
					As-Built Total:							**9674.8**

CODE COMPLIANCE STATUS

BASE				AS-BUILT			
Cooling Points +	Heating Points +	Hot Water Points =	Total Points	Cooling Points +	Heating Points +	Hot Water Points =	Total Points
21873	**1007**	**9476**	**32356**	**15477**	**4804**	**9675**	**29955**

PASS

ENERGY PERFORMANCE LEVEL (EPL) DISPLAY CARD

ESTIMATED ENERGY PERFORMANCE SCORE* = 85.3

The higher the score, the more efficient the home.

MR & MRS TORRES, 18321 SW 8TH AVE, MIAMI, FL,

1. New construction or existing		New	
2. Single family or multi-family		Single family	
3. Number of units, if multi-family		1	
4. Number of Bedrooms		4	
5. Is this a worst case?		No	
6. Conditioned floor area (ft²)		1855 ft²	
7. Glass area & type	Single Pane	Double Pane	
a. Clear - single pane	304.4 ft²	0.0 ft²	
b. Clear - double pane	0.0 ft²	0.0 ft²	
c. Tint/other SHGC - single pane	0.0 ft²	0.0 ft²	
d. Tint/other SHGC - double pane			
8. Floor types			
a. Slab-On-Grade Edge Insulation		R=0.0, 275.0(p) ft	
b. N/A			
c. N/A			
9. Wall types			
a. Concrete, Int Insul, Exterior		R=4.1, 970.0 ft²	
b. Concrete, Int Insul, Exterior		R=0.0, 1110.0 ft²	
c. N/A			
d. N/A			
e. N/A			
10. Ceiling types			
a. Under Attic		R=19.0, 1855.0 ft²	
b. N/A			
c. N/A			
11. Ducts			
a. Sup: Unc. Ret: Unc. AH: Interior		Sup. R=6.0, 132.0 ft	
b. N/A			

12. Cooling systems		
a. Central Unit	Cap: 51.5 kBtu/hr	
	SEER: 14.15	
b. N/A		
c. N/A		
13. Heating systems		
a. Electric Strip	Cap: 34.0 kBtu/hr	
	COP: 1.00	
b. N/A		
c. N/A		
14. Hot water systems		
a. Electric Resistance	Cap: 50.0 gallons	
	EF: 0.86	
b. Electric Resistance	Cap: 1.0 gallons	
	EF: 0.97	
c. Conservation credits (HR-Heat recovery, Solar DHP-Dedicated heat pump)		
15. HVAC credits (CF-Ceiling fan, CV-Cross ventilation, HF-Whole house fan, PT-Programmable Thermostat, MZ-C-Multizone cooling, MZ-H-Multizone heating)	PT,	

I certify that this home has complied with the Florida Energy Efficiency Code For Building Construction through the above energy saving features which will be installed (or exceeded) in this home before final inspection. Otherwise, a new EPL Display Card will be completed based on installed Code compliant features.

Builder Signature: _____ Date: _____

Address of New Home: _____ City/FL Zip: _____

**NOTE: The home's estimated energy performance score is only available through the FLA/RES computer program. This is not a Building Energy Rating. If your score is 80 or greater (or 86 for a US EPA/DOE EnergyStar™ designation), your home may qualify for energy efficiency mortgage (EEM) incentives if you obtain a Florida Energy Gauge Rating. Contact the Energy Gauge Hotline at 321/638-1492 or see the Energy Gauge web site at www.fsec.ucf.edu for information and a list of certified Raters. For information about Florida's Energy Efficiency Code For Building Construction, contact the Department of Community Affairs at 850/488-7824.*

EnergyGauge® (Version: FLRCPB v3.30)

FORM 600A-2001

Code Compliance Checklist

Residential Whole Building Performance Method A - Details

ADDRESS: 13321 SW 8TH AVE, MIAMI, FL, PERMIT #:

6A-21 INFILTRATION REDUCTION COMPLIANCE CHECKLIST

COMPONENTS	SECTION	REQUIREMENTS FOR EACH PRACTICE	CHECK
Exterior Windows & Doors	606.1.ABC.1.1	Maximum: .3 cfm/sq.ft. window area; .5 cfm/sq.ft. door area.	✓
Exterior & Adjacent Walls	606.1.ABC.1.2.1	Caulk, gasket, weatherstrip or seal between: windows/doors & frames, surrounding wall; foundation & wall sole or sill plate; joints between exterior wall panels at corners; utility penetrations; between wall panels & top/bottom plates; between walls and floor. EXCEPTION: Frame walls where a continuous infiltration barrier is installed that extends from, and is sealed to, the foundation to the top plate.	✓
Floors	606.1.ABC.1.2.2	Penetrations/openings >1/8" sealed unless backed by truss or joint members. EXCEPTION: Frame floors where a continuous infiltration barrier is installed that is sealed to the perimeter, penetrations and seams.	✓
Ceilings	606.1.ABC.1.2.3	Between walls & ceilings; penetrations of ceiling plane of top floor; around shafts, chases, soffits, chimneys, cabinets sealed to continuous air barrier; gaps in gyp board & top plate; attic access. EXCEPTION: Frame ceilings where a continuous infiltration barrier is installed that is sealed at the perimeter, at penetrations and seams.	✓
Recessed Lighting Fixtures	606.1.ABC.1.2.4	Type IC rated with no penetrations, sealed; or Type IC or non-IC rated, installed inside a sealed box with 1/2" clearance & 3" from insulation; or Type IC rated with < 2.0 cfm from conditioned space, tested.	✓
Multi-story Houses	606.1.ABC.1.2.5	Air barrier on perimeter of floor cavity between floors.	N/A
Additional Infiltration reqts	606.1.ABC.1.3	Exhaust fans vented to outdoors, dampers; combustion space heaters comply with NFPA, have combustion air.	✓

6A-22 OTHER PRESCRIPTIVE MEASURES (must be met or exceeded by all residences.)

COMPONENTS	SECTION	REQUIREMENTS	CHECK
Water Heaters	612.1	Comply with efficiency requirements in Table 6-12. Switch or clearly marked circuit breaker (electric) or cutoff (gas) must be provided. External or built-in heat trap required.	✓
Swimming Pools & Spas	612.1	Spas & heated pools must have covers (except solar heated). Non-commercial pools must have a pump timer. Gas spa & pool heaters must have a minimum thermal efficiency of 78%.	N/A
Shower heads	612.1	Water flow must be restricted to no more than 2.5 gallons per minute at 80 PSIG.	✓
Air Distribution Systems	610.1	All ducts, fittings, mechanical equipment and plenum chambers shall be mechanically attached, sealed, insulated, and installed in accordance with the criteria of Section 610. Ducts in unconditioned attics: R-6 min. insulation.	✓
HVAC Controls	607.1	Separate readily accessible manual or automatic thermostat for each system.	✓
Insulation	604.1, 602.1	Ceilings-Min. R-19. Common walls-Frame R-11 or CBS R-3 both sides. Common ceiling & floors R-11.	✓

Emissions Associated with House Energy Use

MR & MRS TORRES
18321 SW 8TH AVE
MIAMI, FL

Project Title:
TORRES RESIDENCE

Code Only
Professional Version
Climate: South

1/25/2005

Annual Energy Consumption

	Electric	Gas	Oil
Cooling	4539 kWh	0.0 MBtu	0.0 MBtu
Heating	1407 kWh	0.0 MBtu	0.0 MBtu
Water Heating	2835 kWh	0.0 MBtu	0.0 MBtu
Dryer	985 kWh	0.0 MBtu	0.0 MBtu
Range	687 kWh	0.0 MBtu	0.0 MBtu
Refrigerator	1551 kWh	0.0 MBtu	0.0 MBtu
Lighting	1853 kWh	0.0 MBtu	0.0 MBtu
Pool	0 kWh	0.0 MBtu	0.0 MBtu
Other	2044 kWh	0.0 MBtu	0.0 MBtu
Totals	15901 kWh	0.0 MBtu	0.0 MBtu

Annual Emissions

Sulfur Dioxide (SO_2)	175.1 lbs.
Nitrogen oxides (NO_X)	70.4 lbs.
Carbon Dioxide (CO_2)	13.64 tons

Summary Energy Code Results

Residential Whole Building Performance Method A

MR & MRS TORRES
18321 SW 8TH AVE
MIAMI, FL

Project Title:
TORRES RESIDENCE

Code Only
Professional Version
Climate: South

1/25/2005

Building Loads			
Base		As-Built	
Summer:	**51273 points**	Summer:	**60087 points**
Winter:	**1605 points**	Winter:	**4447 points**
Hot Water:	**8339 points**	Hot Water:	**8339 points**
Total:	**61217 points**	Total:	**72873 points**

Energy Use			
Base		As-Built	
Cooling:	**21873 points**	Cooling:	**15477 points**
Heating:	**1007 points**	Heating:	**4804 points**
Hot Water:	**9476 points**	Hot Water:	**9675 points**
Total:	**32356 points**	Total:	**29955 points**

PASS
e-Ratio: 0.93

EnergyGauge®(Version: FLRCPB v3.30)

Residential System Sizing Calculation

Summary

MR & MRS TORRES
18321 SW 8TH AVE
MIAMI, FL

Project Title:
TORRES RESIDENCE

Code Only
Professional Version
Climate: South

1/25/2005

Location for weather data: Miami - Defaults: Latitude(25) Temp Range(L)
Humidity data: Interior RH (50%) Outdoor wet bulb (77F) Humidity difference(56gr.)

Winter design temperature	47	F	Summer design temperature	90	F
Winter setpoint	70	F	Summer setpoint	75	F
Winter temperature difference	23	F	Summer temperature difference	15	F
Total heating load calculation	**38471**	**Btuh**	**Total cooling load calculation**	**41549**	**Btuh**
Submitted heating capacity	% of calc	Btuh	Submitted cooling capacity	% of calc	Btuh
Total (Electric Strip)	88.4	34000	Sensible (SHR = 0.7)	99.4	35350
			Latent	253.8	15150
			Total	121.5	50500

WINTER CALCULATIONS

Winter Heating Load (for 1855 sqft)

Load component			Load	
Window total	304	sqft	8097	Btuh
Wall total	2080	sqft	17643	Btuh
Door total	40	sqft	423	Btuh
Ceiling total	1855	sqft	2226	Btuh
Floor total	275	ft	5115	Btuh
Infiltration	124	cfm	3135	Btuh
Subtotal			**36639**	**Btuh**
Duct loss			1832	Btuh
TOTAL HEAT LOSS			**38471**	**Btuh**

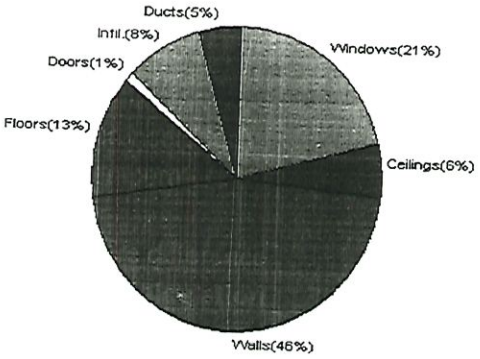

SUMMER CALCULATIONS

Summer Cooling Load (for 1855 sqft)

Load component			Load	
Window total	304	sqft	10505	Btuh
Wall total	2080	sqft	11770	Btuh
Door total	40	sqft	416	Btuh
Ceiling total	1855	sqft	4267	Btuh
Floor total			0	Btuh
Infiltration	108	cfm	1789	Btuh
Internal gain			3600	Btuh
Subtotal(sensible)			**32346**	**Btuh**
Duct gain			3235	Btuh
Total sensible gain			**35580**	**Btuh**
Latent gain(infiltration)			4129	Btuh
Latent gain(internal)			1840	Btuh
Total latent gain			**5969**	**Btuh**
TOTAL HEAT GAIN			**41549**	**Btuh**

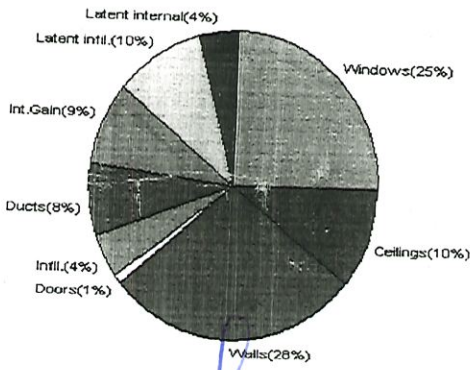

EnergyGauge® System Sizing based on ACCA Manual J.
PREPARED BY: _____
DATE: _____

1c

System Sizing Calculations - Summer

Residential Load - Component Details

MR & MRS TORRES
18321 SW 8TH AVE
MIAMI, FL

Project Title:
TORRES RESIDENCE

Code Only
Professional Version
Climate: South

Reference City: Miami (Defaults) Summer Temperature Difference: 15.0 F

1/25/2005

Window	Type Panes/SHGC/U/InSh/ExSh	Ornt	Overhang Len	Overhang Hgt	Window Area(sqft) Gross	Shaded	Unshaded	HTM Shaded	HTM Unshaded	Load
1	1, Clear, DEF, B, N	N	2	8.33	40.0	0.0	40.0	18	18	720 Btuh
2	1, Clear, DEF, B, N	S	2	5.17	28.0	28.0	0.0	18	28	504 Btuh
3	1, Clear, DEF, B, N	S	6.23	3	51.0	51.0	0.0	18	28	918 Btuh
4	1, Clear, DEF, B, N	E	2	8.33	80.0	15.9	64.1	18	52	3618 Btuh
5	1, Clear, DEF, B, N	E	2	8.33	20.0	0.0	20.0	18	52	1040 Btuh
6	1, Clear, DEF, B, N	E	2	4.17	10.3	2.2	8.1	18	52	459 Btuh
7	1, Clear, DEF, B, N	E	2	3.17	7.1	3.1	4.0	18	52	265 Btuh
8	1, Clear, DEF, B, N	W	2	5.17	19.0	3.7	15.3	18	52	862 Btuh
9	1, Clear, DEF, B, N	W	2	4.17	15.0	5.3	9.7	18	52	601 Btuh
10	1, Clear, DEF, B, N	W	2	6.23	34.0	7.4	26.6	18	52	1518 Btuh
	Window Total				304					10505 Btuh

	Type	R-Value	Area	HTM	Load
Walls 1	Concrete - Exterior	4.1	970.0	3.2	3112 Btuh
2	Concrete - Exterior	0.0	1110.0	7.8	8658 Btuh
	Wall Total		2080.0		11770 Btuh

	Type	Area	HTM	Load
Doors 1	Wood - Exter	40.0	10.4	416 Btuh
	Door Total	40.0		416 Btuh

	Type/Color	R-Value	Area	HTM	Load
Ceilings 1	Under Attic/Dark	19.0	1855.0	2.3	4266 Btuh
	Ceiling Total		1855.0		4267 Btuh

	Type	R-Value	Size	HTM	Load
Floors 1	Slab-On-Grade Edge Insulation	0.0	275.0 ft(p)	0.0	0 Btuh
	Floor Total		275.0		0 Btuh

	Type	ACH	Volume	CFM=	Load
Infiltration	Natural	0.35	18550	108.4	1789 Btuh
	Mechanical			0	0 Btuh
	Infiltration Total			108	1789 Btuh

Internal gain	Occupants		Btuh/occupant		Appliance	Load
	8	X	300	+	1200	3600 Btuh

Manual J Summer Calculations

Residential Load - Component Details (continued)

MR & MRS TORRES
18321 SW 8TH AVE
MIAMI, FL

Project Title:
TORRES RESIDENCE

Code Only
Professional Version
Climate: South

1/25/2005

Totals for Cooling	Subtotal	32346 Btuh
	Duct gain(using duct multiplier of 0.10)	3235 Btuh
	Total sensible gain	35580 Btuh
	Latent infiltration gain (for 56 gr. humidity difference)	4129 Btuh
	Latent occupant gain (8 people @ 230 Btuh per person)	1840 Btuh
	Latent other gain	0 Btuh
	TOTAL GAIN	41549 Btuh

Key: Window types (SHGC - Shading coefficient of glass as SHGC numerical value or as clear or tint)
(U - Window U-Factor or 'DEF' for default)
(InSh - Interior shading device: none(N), Blinds/Daperies(B) or Roller Shades(R))
(ExSh - Exterior shading device: none(N) or numerical value)
(Ornt - compass orientation)

12

System Sizing Calculations - Winter

Residential Load - Component Details

MR & MRS TORRES
18321 SW 8TH AVE
MIAMI, FL

Project Title:
TORRES RESIDENCE

Code Only
Professional Version
Climate: South

Reference City: Miami (Defaults) Winter Temperature Difference: 23.0 F

1/25/2005

Window	Panes/SHGC/Frame/U	Orientation	Area X	HTM=	Load
1	1, Clear, Metal, DEF	N	40.0	26.6	1064 Btuh
2	1, Clear, Metal, DEF	S	28.0	26.6	745 Btuh
3	1, Clear, Metal, DEF	S	51.0	26.6	1357 Btuh
4	1, Clear, Metal, DEF	E	80.0	26.6	2128 Btuh
5	1, Clear, Metal, DEF	E	20.0	26.6	532 Btuh
6	1, Clear, Metal, DEF	E	10.3	26.6	274 Btuh
7	1, Clear, Metal, DEF	E	7.1	26.6	189 Btuh
8	1, Clear, Metal, DEF	W	19.0	26.6	505 Btuh
9	1, Clear, Metal, DEF	W	15.0	26.6	399 Btuh
10	1, Clear, Metal, DEF	W	34.0	26.6	904 Btuh
	Window Total		304		8097 Btuh
Walls	Type	R-Value	Area X	HTM=	Load
1	Concrete - Exterior	4.1	970	4.8	4656 Btuh
2	Concrete - Exterior	0.0	1110	11.7	12987 Btuh
	Wall Total		2080		17643 Btuh
Doors	Type		Area X	HTM=	Load
1	Wood - Exter		40	10.6	423 Btuh
	Door Total		40		423Btuh
Ceilings	Type	R-Value	Area X	HTM=	Load
1	Under Attic	19.0	1855	1.2	2226 Btuh
	Ceiling Total		1855		2226Btuh
Floors	Type	R-Value	Size X	HTM=	Load
1	Slab-On-Grade Edge Insul	0	275.0 ft(p)	18.6	5115 Btuh
	Floor Total		275		5115 Btuh
Infiltration	Type	ACH X	Building Volume	CFM=	Load
	Natural	0.40	18550(sqft)	124	3135 Btuh
	Mechanical			0	0 Btuh
	Infiltration Total			124	3135 Btuh

Totals for Heating	**Subtotal**	**36639 Btuh**
	Duct Loss(using duct multiplier of 0.05)	**1832 Btuh**
	Total Btuh Loss	**38471 Btuh**

Key: Window types (SHGC - Shading coefficient of glass as SHGC numerical value or as clear or tint)
(Frame types - metal, wood or insulated metal)
(U - Window U-Factor or 'DEF' for default)
(HTM - ManualJ Heat Transfer Multiplier)
Key: Floor size (perimeter(p) for slab-on-grade or area for all other floor types)

FORM 600A-2001

FLORIDA ENERGY EFFICIENCY CODE FOR BUILDING CONSTRUCTION

Florida Department of Community Affairs

Residential Whole Building Performance Method A

Project Name:	TORRES RESIDENCE	Builder:	
Address:	18321 SW 8TH AVE	Permitting Office:	MIAMI-DADE
City, State:	MIAMI, FL	Permit Number:	
Owner:	MR & MRS TORRES	Jurisdiction Number:	231000
Climate Zone:	South		

1. New construction or existing		New	
2. Single family or multi-family		Single family	
3. Number of units, if multi-family		1	
4. Number of Bedrooms		4	
5. Is this a worst case?		No	
6. Conditioned floor area (ft²)		1855 ft²	
7. Glass area & type	Single Pane	Double Pane	
a. Clear glass, default U-factor	304.4 ft²	0.0 ft²	
b. Default tint	0.0 ft²	0.0 ft²	
c. Labeled U or SHGC	0.0 ft²	0.0 ft²	
8. Floor types			
a. Slab-On-Grade Edge Insulation		R=0.0, 275.0(p) ft	
b. N/A			
c. N/A			
9. Wall types			
a. Concrete, Int Insul, Exterior		R=4.1, 970.0 ft²	
b. Concrete, Int Insul, Exterior		R=0.0, 1110.0 ft²	
c. N/A			
d. N/A			
e. N/A			
10. Ceiling types			
a. Under Attic		R=19.0, 1855.0 ft²	
b. N/A			
c. N/A			
11. Ducts			
a. Sup: Unc. Ret: Unc. AH: Interior		Sup. R=6.0, 132.0 ft	
b. N/A			

12. Cooling systems		
a. Central Unit	Cap: 60.0 kBtu/hr	
	SEER: 12.40	
b. N/A		
c. N/A		
13. Heating systems		
a. Electric Strip	Cap: 34.0 kBtu/hr	
	COP: 1.00	
b. N/A		
c. N/A		
14. Hot water systems		
a. Electric Resistance	Cap: 50.0 gallons	
	EF: 0.86	
b. Electric Resistance	Cap: 1.0 gallons	
	EF: 0.97	
c. Conservation credits (HR-Heat recovery, Solar DHP-Dedicated heat pump)		
15. HVAC credits (CF-Ceiling fan, CV-Cross ventilation, HF-Whole house fan, PT-Programmable Thermostat, MZ-C-Multizone cooling, MZ-H-Multizone heating)	PT,	

Glass/Floor Area: 0.16

Total as-built points: 32139

Total base points: 32356

PASS

I hereby certify that the plans and specifications covered by this calculation are in compliance with the Florida Energy Code.

PREPARED BY: _____

DATE: _____ REVISED FEB 25 2005

I hereby certify that this building, as designed, is in compliance with the Florida Energy Code.

OWNER/AGENT: _____

DATE: _____

Review of the plans and specifications covered by this calculation indicates compliance with the Florida Energy Code. Before construction is completed this building will be inspected for compliance with Section 553.908 Florida Statutes.

GREAT SEAL OF THE STATE OF FLORIDA — IN GOD WE TRUST

BUILDING OFFICIAL: _____

DATE: _____

Summary Energy Code Results

Residential Whole Building Performance Method A

MR & MRS TORRES
18321 SW 8TH AVE
MIAMI, FL

Project Title:
TORRES RESIDENCE

Code Only
Professional Version
Climate: South

2/24/2005

Building Loads			
Base		As-Built	
Summer:	**51273 points**	Summer:	**60087 points**
Winter:	**1605 points**	Winter:	**4447 points**
Hot Water:	**8339 points**	Hot Water:	**8339 points**
Total:	**61217 points**	Total:	**72873 points**

Energy Use			
Base		As-Built	
Cooling:	**21873 points**	Cooling:	**17661 points**
Heating:	**1007 points**	Heating:	**4804 points**
Hot Water:	**9476 points**	Hot Water:	**9675 points**
Total:	**32356 points**	Total:	**32139 points**

PASS
e-Ratio: 0.99

EnergyGauge®(Version: FLRCPB v3.30)

FORM 600A-2001

SUMMER CALCULATIONS

Residential Whole Building Performance Method A - Details

ADDRESS: **18321 SW 8TH AVE, MIAMI, FL,** PERMIT #:

BASE

GLASS TYPES

.18 X	Conditioned Floor Area	X BSPM	= Points
.18	1855.0	32.50	10851.8

AS-BUILT

Type/SC	Overhang Ornt	Len	Hgt	Area	X SPM	X SOF	= Points
Single, Clear	N	2.0	8.3	40.0	36.46	0.94	1377.9
Single, Clear	S	2.0	5.2	28.0	66.93	0.75	1405.7
Single, Clear	S	6.2	3.0	51.0	66.93	0.45	1521.0
Single, Clear	E	2.0	8.3	80.0	78.71	0.92	5818.8
Single, Clear	E	2.0	8.3	20.0	78.71	0.92	1454.7
Single, Clear	E	2.0	4.2	10.3	78.71	0.75	610.2
Single, Clear	E	2.0	3.2	7.1	78.71	0.67	371.7
Single, Clear	W	2.0	5.2	19.0	70.53	0.82	1101.5
Single, Clear	W	2.0	4.2	15.0	70.53	0.76	805.1
Single, Clear	W	2.0	6.2	34.0	70.53	0.87	2081.3
As-Built Total:				**304.4**			**16547.9**

WALL TYPES	Area	X BSPM	= Points
Adjacent	0.0	0.00	0.0
Exterior	2080.0	2.70	5616.0
Base Total:	**2080.0**		**5616.0**

Type	R-Value	Area	X SPM	= Points
Concrete, Int Insul, Exterior	4.1	970.0	2.32	2245.6
Concrete, Int Insul, Exterior	0.0	1110.0	4.20	4662.0
As-Built Total:		**2080.0**		**6907.5**

DOOR TYPES	Area	X BSPM	= Points
Adjacent	0.0	0.00	0.0
Exterior	40.0	6.40	256.0
Base Total:	**40.0**		**256.0**

Type	Area	X SPM	= Points
Exterior Wood	40.0	9.40	376.0
As-Built Total:	**40.0**		**376.0**

CEILING TYPES	Area	X BSPM	= Points
Under Attic	1855.0	2.80	5194.0
Base Total:	**1855.0**		**5194.0**

Type	R-Value	Area	X SPM X SCM	= Points
Under Attic	19.0	1855.0	3.72 X 1.00	6900.6
As-Built Total:		**1855.0**		**6900.6**

FLOOR TYPES	Area	X BSPM	= Points
Slab	275.0(p)	-20.0	-5500.0
Raised	0.0	0.00	0.0
Base Total:			**-5500.0**

Type	R-Value	Area	X SPM	= Points
Slab-On-Grade Edge Insulation	0.0	275.0(p	-20.00	-5500.0
As-Built Total:		**275.0**		**-5500.0**

INFILTRATION	Area	X BSPM	= Points
	1855.0	*18.79*	*34855.4*

	Area	X SPM	= Points
	1855.0	*18.79*	*34855.4*

SUMMER CALCULATIONS

Residential Whole Building Performance Method A - Details

ADDRESS: **18321 SW 8TH AVE, MIAMI, FL,** PERMIT #:

BASE				AS-BUILT							
Summer Base Points:			**51273.2**	**Summer As-Built Points:**							**60087.5**
Total Summer Points	X	System Multiplier	= Cooling Points	Total Component	X	Cap Ratio	X	Duct Multiplier (DM x DSM x AHU)	X System Multiplier	X Credit Multiplier	= Cooling Points
51273.2		**0.4266**	**21873.1**	60087.5 **60087.5**		1.000 **1.00**		(1.073 x 1.165 x 0.90) **1.125**	0.275 **0.275**	0.950 **0.950**	17660.7 **17660.7**

FORM 600A-2001

WINTER CALCULATIONS

Residential Whole Building Performance Method A - Details

ADDRESS: **18321 SW 8TH AVE, MIAMI, FL,** PERMIT #:

BASE

GLASS TYPES .18 X Conditioned Floor Area	X BWPM	= Points
.18 1855.0	2.36	788.0

WALL TYPES	Area	X BWPM	= Points
Adjacent	0.0	0.00	0.0
Exterior	2080.0	0.60	1248.0
Base Total:	**2080.0**		**1248.0**

DOOR TYPES	Area	X BWPM	= Points
Adjacent	0.0	0.00	0.0
Exterior	40.0	1.80	72.0
Base Total:	**40.0**		**72.0**

CEILING TYPES	Area	X BWPM	= Points
Under Attic	1855.0	0.10	185.5
Base Total:	**1855.0**		**185.5**

FLOOR TYPES	Area	X BWPM	= Points
Slab	275.0(p)	-2.1	-577.5
Raised	0.0	0.00	0.0
Base Total:			**-577.5**

INFILTRATION	Area	X BWPM	= Points
	1855.0	*-0.06*	*-111.3*

AS-BUILT

Type/SC	Overhang Ornt	Len	Hgt	Area	X WPM	X WOF	= Points
Single, Clear	N	2.0	8.3	40.0	6.03	0.99	239.4
Single, Clear	S	2.0	5.2	28.0	4.49	1.07	135.1
Single, Clear	S	6.2	3.0	51.0	4.49	1.43	328.1
Single, Clear	E	2.0	8.3	80.0	4.77	1.02	389.4
Single, Clear	E	2.0	8.3	20.0	4.77	1.02	97.4
Single, Clear	E	2.0	4.2	10.3	4.77	1.05	51.4
Single, Clear	E	2.0	3.2	7.1	4.77	1.06	36.0
Single, Clear	W	2.0	5.2	19.0	5.49	1.00	104.6
Single, Clear	W	2.0	4.2	15.0	5.49	1.01	82.9
Single, Clear	W	2.0	6.2	34.0	5.49	1.00	186.7
As-Built Total:				**304.4**			**1651.0**

Type	R-Value	Area	X WPM	= Points
Concrete, Int Insul, Exterior	4.1	970.0	1.03	1003.9
Concrete, Int Insul, Exterior	0.0	1110.0	1.90	2109.0
As-Built Total:		**2080.0**		**3112.9**

Type	Area	X WPM	= Points
Exterior Wood	40.0	2.80	112.0
As-Built Total:	**40.0**		**112.0**

Type	R-Value	Area	X WPM X WCM	= Points
Under Attic	19.0	1855.0	0.14 X 1.00	259.7
As-Built Total:		**1855.0**		**259.7**

Type	R-Value	Area	X WPM	= Points
Slab-On-Grade Edge Insulation	0.0	275.0(p	-2.10	-577.5
As-Built Total:		**275.0**		**-577.5**

Area	X WPM	= Points
1855.0	*-0.06*	-111.3

WINTER CALCULATIONS

Residential Whole Building Performance Method A - Details

ADDRESS: **18321 SW 8TH AVE, MIAMI, FL,** PERMIT #:

BASE			AS-BUILT						
Winter Base Points:		**1604.7**	**Winter As-Built Points:**						**4446.8**
Total Winter Points	X System Multiplier	= Heating Points	Total Component	X Cap Ratio	X Duct Multiplier (DM x DSM x AHU)	X System Multiplier	X Credit Multiplier	= Heating Points	
1604.7	**0.6274**	**1006.8**	4446.8 **4446.8**	1.000 **1.00**	(1.099 x 1.137 x 0.91) **1.137**	1.000 **1.000**	0.950 **0.950**	4803.7 **4803.7**	

FORM 600A-2001

WATER HEATING & CODE COMPLIANCE STATUS

Residential Whole Building Performance Method A - Details

ADDRESS: **18321 SW 8TH AVE, MIAMI, FL,** PERMIT #:

BASE				AS-BUILT							
WATER HEATING											
Number of Bedrooms	X	Multiplier	= Total	Tank Volume	EF	Number of Bedrooms	X	Tank Ratio	X Multiplier	X Credit Multiplier	= Total
4		2369.00	9476.0	50.0	0.86	4		0.98	2424.09	1.00	9506.2
				1.0	*0.97*	*4*		*0.02*	*2149.20*	*1.00*	*168.6*
				As-Built Total:							9674.8

CODE COMPLIANCE STATUS

BASE				AS-BUILT			
Cooling Points +	Heating Points +	Hot Water Points =	Total Points	Cooling Points +	Heating Points +	Hot Water Points =	Total Points
21873	**1007**	**9476**	**32356**	**17661**	**4804**	**9675**	**32139**

PASS

Code Compliance Checklist

Residential Whole Building Performance Method A - Details

ADDRESS: **18321 SW 8TH AVE, MIAMI, FL,** PERMIT #:

6A-21 INFILTRATION REDUCTION COMPLIANCE CHECKLIST

COMPONENTS	SECTION	REQUIREMENTS FOR EACH PRACTICE	CHECK
Exterior Windows & Doors	606.1.ABC.1.1	Maximum: .3 cfm/sq.ft. window area; .5 cfm/sq.ft. door area.	✓
Exterior & Adjacent Walls	606.1.ABC.1.2.1	Caulk, gasket, weatherstrip or seal between: windows/doors & frames, surrounding wall; foundation & wall sole or sill plate; joints between exterior wall panels at corners; utility penetrations; between wall panels & top/bottom plates; between walls and floor. EXCEPTION: Frame walls where a continuous infiltration barrier is installed that extends from, and is sealed to, the foundation to the top plate.	✓
Floors	606.1.ABC.1.2.2	*Penetrations/openings >1/8" sealed unless backed by truss or joint members.* EXCEPTION: Frame floors where a continuous infiltration barrier is installed that is sealed to the perimeter, penetrations and seams.	✓
Ceilings	606.1.ABC.1.2.3	Between walls & ceilings; penetrations of ceiling plane of top floor; around shafts, chases, soffits, chimneys, cabinets sealed to continuous air barrier; gaps in gyp board & top plate; attic access. EXCEPTION: Frame ceilings where a continuous infiltration barrier is installed that is sealed at the perimeter, at penetrations and seams.	✓
Recessed Lighting Fixtures	606.1.ABC.1.2.4	Type IC rated with no penetrations, sealed; or Type IC or non-IC rated, installed inside a sealed box with 1/2" clearance & 3" from insulation; or Type IC rated with < 2.0 cfm from conditioned space, tested.	✓
Multi-story Houses	606.1.ABC.1.2.5	Air barrier on perimeter of floor cavity between floors.	N/A
Additional Infiltration reqts	606.1.ABC.1.3	Exhaust fans vented to outdoors, dampers; combustion space heaters comply with NFPA, have combustion air.	✓

6A-22 OTHER PRESCRIPTIVE MEASURES (must be met or exceeded by all residences.)

COMPONENTS	SECTION	REQUIREMENTS	CHECK
Water Heaters	612.1	Comply with efficiency requirements in Table 6-12. Switch or clearly marked circuit breaker (electric) or cutoff (gas) must be provided. External or built-in heat trap required.	✓
Swimming Pools & Spas	612.1	Spas & heated pools must have covers (except solar heated). Non-commercial pools must have a pump timer. Gas spa & pool heaters must have a minimum thermal efficiency of 78%.	N/A
Shower heads	612.1	Water flow must be restricted to no more than 2.5 gallons per minute at 80 PSIG.	✓
Air Distribution Systems	610.1	All ducts, fittings, mechanical equipment and plenum chambers shall be mechanically attached, sealed, insulated, and installed in accordance with the criteria of Section 610. Ducts in unconditioned attics: R-6 min. insulation.	✓
HVAC Controls	607.1	Separate readily accessible manual or automatic thermostat for each system.	✓
Insulation	604.1, 602.1	Ceilings-Min. R-19. Common walls-Frame R-11 or CBS R-3 both sides. Common ceiling & floors R-11.	✓

ENERGY PERFORMANCE LEVEL (EPL) DISPLAY CARD

ESTIMATED ENERGY PERFORMANCE SCORE* = 83.9

The higher the score, the more efficient the home.

MR & MRS TORRES, 18321 SW 8TH AVE, MIAMI, FL,

1. New construction or existing		New	
2. Single family or multi-family		Single family	
3. Number of units, if multi-family		1	
4. Number of Bedrooms		4	
5. Is this a worst case?		No	
6. Conditioned floor area (ft²)		1855 ft²	
7. Glass area & type	Single Pane	Double Pane	
a. Clear - single pane	304.4 ft²	0.0 ft²	
b. Clear - double pane	0.0 ft²	0.0 ft²	
c. Tint/other SHGC - single pane	0.0 ft²	0.0 ft²	
d. Tint/other SHGC - double pane			
8. Floor types			
a. Slab-On-Grade Edge Insulation		R=0.0, 275.0(p) ft	
b. N/A			
c. N/A			
9. Wall types			
a. Concrete, Int Insul, Exterior		R=4.1, 970.0 ft²	
b. Concrete, Int Insul, Exterior		R=0.0, 1110.0 ft²	
c. N/A			
d. N/A			
e. N/A			
10. Ceiling types			
a. Under Attic		R=19.0, 1855.0 ft²	
b. N/A			
c. N/A			
11. Ducts			
a. Sup: Unc. Ret: Unc. AH: Interior		Sup. R=6.0, 132.0 ft	
b. N/A			

12. Cooling systems		
a. Central Unit	Cap: 60.0 kBtu/hr	
	SEER: 12.40	
b. N/A		
c. N/A		
13. Heating systems		
a. Electric Strip	Cap: 34.0 kBtu/hr	
	COP: 1.00	
b. N/A		
c. N/A		
14. Hot water systems		
a. Electric Resistance	Cap: 50.0 gallons	
	EF: 0.86	
b. Electric Resistance	Cap: 1.0 gallons	
	EF: 0.97	
c. Conservation credits (HR-Heat recovery, Solar DHP-Dedicated heat pump)		
15. HVAC credits (CF-Ceiling fan, CV-Cross ventilation, HF-Whole house fan, PT-Programmable Thermostat, MZ-C-Multizone cooling, MZ-H-Multizone heating)	PT,	

I certify that this home has complied with the Florida Energy Efficiency Code For Building Construction through the above energy saving features which will be installed (or exceeded) in this home before final inspection. Otherwise, a new EPL Display Card will be completed based on installed Code compliant features.

Builder Signature: _____ Date: _____

Address of New Home: _____ City/FL Zip: _____

**NOTE: The home's estimated energy performance score is only available through the FLA/RES computer program. This is not a Building Energy Rating. If your score is 80 or greater (or 86 for a US EPA/DOE EnergyStar™ designation), your home may qualify for energy efficiency mortgage (EEM) incentives if you obtain a Florida Energy Gauge Rating. Contact the Energy Gauge Hotline at 321/638-1492 or see the Energy Gauge web site at www.fsec.ucf.edu for information and a list of certified Raters. For information about Florida's Energy Efficiency Code For Building Construction, contact the Department of Community Affairs at 850/487-1824.*

Energy Gauge® (Version: FLRCPB v3.30)

System Sizing Calculations - Summer

Residential Load - Component Details

MR & MRS TORRES
18321 SW 8TH AVE
MIAMI, FL

Project Title:
TORRES RESIDENCE

Code Only
Professional Version
Climate: South

Reference City: Miami (Defaults) Summer Temperature Difference: 15.0 F

2/24/2005

Window	Type Panes/SHGC/U/InSh/ExSh	Ornt	Overhang Len	Overhang Hgt	Window Area(sqft) Gross	Shaded	Unshaded	HTM Shaded	HTM Unshaded	Load	
1	1, Clear, DEF, B, N	N	2	8.33	40.0	0.0	40.0	18	18	720	Btuh
2	1, Clear, DEF, B, N	S	2	5.17	28.0	28.0	0.0	18	28	504	Btuh
3	1, Clear, DEF, B, N	S	6.23	3	51.0	51.0	0.0	18	28	918	Btuh
4	1, Clear, DEF, B, N	E	2	8.33	80.0	15.9	64.1	18	52	3618	Btuh
5	1, Clear, DEF, B, N	E	2	8.33	20.0	0.0	20.0	18	52	1040	Btuh
6	1, Clear, DEF, B, N	E	2	4.17	10.3	2.2	8.1	18	52	459	Btuh
7	1, Clear, DEF, B, N	E	2	3.17	7.1	3.1	4.0	18	52	265	Btuh
8	1, Clear, DEF, B, N	W	2	5.17	19.0	3.7	15.3	18	52	862	Btuh
9	1, Clear, DEF, B, N	W	2	4.17	15.0	5.3	9.7	18	52	601	Btuh
10	1, Clear, DEF, B, N	W	2	6.23	34.0	7.4	26.6	18	52	1518	Btuh
	Window Total				304					10505	Btuh

Walls	Type	R-Value	Area	HTM	Load	
1	Concrete - Exterior	4.1	970.0	3.2	3112	Btuh
2	Concrete - Exterior	0.0	1110.0	7.8	8658	Btuh
	Wall Total		2080.0		11770	Btuh

Doors	Type	Area	HTM	Load	
1	Wood - Exter	40.0	10.4	416	Btuh
	Door Total	40.0		416	Btuh

Ceilings	Type/Color	R-Value	Area	HTM	Load	
1	Under Attic/Dark	19.0	1855.0	2.3	4266	Btuh
	Ceiling Total		1855.0		4267	Btuh

Floors	Type	R-Value	Size	HTM	Load	
1	Slab-On-Grade Edge Insulation	0.0	275.0 ft(p)	0.0	0	Btuh
	Floor Total		275.0		0	Btuh

Infiltration	Type	ACH	Volume	CFM=	Load	
	Natural	0.35	18550	108.4	1789	Btuh
	Mechanical			0	0	Btuh
	Infiltration Total			108	1789	Btuh

Internal gain	Occupants		Btuh/occupant		Appliance	Load	
	8	X	300	+	1200	3600	Btuh

Manual J Summer Calculations

Residential Load - Component Details (continued)

MR & MRS TORRES
18321 SW 8TH AVE
MIAMI, FL

Project Title:
TORRES RESIDENCE

Code Only
Professional Version
Climate: South

2/24/2005

Totals for Cooling	Subtotal	32346	Btuh
	Duct gain(using duct multiplier of 0.10)	3235	Btuh
	Total sensible gain	35580	Btuh
	Latent infiltration gain (for 56 gr. humidity difference)	4129	Btuh
	Latent occupant gain (8 people @ 230 Btuh per person)	1840	Btuh
	Latent other gain	0	Btuh
	TOTAL GAIN	41549	Btuh

Key: Window types (SHGC - Shading coefficient of glass as SHGC numerical value or as clear or tint)
(U - Window U-Factor or 'DEF' for default)
(InSh - Interior shading device: none(N), Blinds/Daperies(B) or Roller Shades(R))
(ExSh - Exterior shading device: none(N) or numerical value)
(Ornt - compass orientation)

System Sizing Calculations - Winter

Residential Load - Component Details

MR & MRS TORRES
18321 SW 8TH AVE
MIAMI, FL

Project Title:
TORRES RESIDENCE

Code Only
Professional Version
Climate: South

Reference City: Miami (Defaults) Winter Temperature Difference: 23.0 F

2/24/2005

Window	Panes/SHGC/Frame/U	Orientation	Area X	HTM=	Load
1	1, Clear, Metal, DEF	N	40.0	26.6	1064 Btuh
2	1, Clear, Metal, DEF	S	28.0	26.6	745 Btuh
3	1, Clear, Metal, DEF	S	51.0	26.6	1357 Btuh
4	1, Clear, Metal, DEF	E	80.0	26.6	2128 Btuh
5	1, Clear, Metal, DEF	E	20.0	26.6	532 Btuh
6	1, Clear, Metal, DEF	E	10.3	26.6	274 Btuh
7	1, Clear, Metal, DEF	E	7.1	26.6	189 Btuh
8	1, Clear, Metal, DEF	W	19.0	26.6	505 Btuh
9	1, Clear, Metal, DEF	W	15.0	26.6	399 Btuh
10	1, Clear, Metal, DEF	W	34.0	26.6	904 Btuh
	Window Total		304		8097 Btuh
Walls	Type	R-Value	Area X	HTM=	Load
1	Concrete - Exterior	4.1	970	4.8	4656 Btuh
2	Concrete - Exterior	0.0	1110	11.7	12987 Btuh
	Wall Total		2080		17643 Btuh
Doors	Type		Area X	HTM=	Load
1	Wood - Exter		40	10.6	423 Btuh
	Door Total		40		423Btuh
Ceilings	Type	R-Value	Area X	HTM=	Load
1	Under Attic	19.0	1855	1.2	2226 Btuh
	Ceiling Total		*1855*		*2226Btuh*
Floors	Type	R-Value	Size X	HTM=	Load
1	Slab-On-Grade Edge Insul	0	275.0 ft(p)	18.6	5115 Btuh
	Floor Total		275		5115 Btuh
Infiltration	Type	ACH X	Building Volume	CFM=	Load
	Natural	0.40	18550(sqft)	124	3135 Btuh
	Mechanical			0	0 Btuh
	Infiltration Total			124	3135 Btuh

Totals for Heating	**Subtotal**	**36639 Btuh**
	Duct Loss(using duct multiplier of 0.05)	**1832 Btuh**
	Total Btuh Loss	**38471 Btuh**

Key: Window types (SHGC - Shading coefficient of glass as SHGC numerical value or as clear or tint)
(Frame types - metal, wood or insulated metal)
(U - Window U-Factor or 'DEF' for default)
(HTM - ManualJ Heat Transfer Multiplier)

Key: Floor size (perimeter(p) for slab-on-grade or area for all other floor types)

Residential System Sizing Calculation

Summary

MR & MRS TORRES
18321 SW 8TH AVE
MIAMI, FL

Project Title:
TORRES RESIDENCE

Code Only
Professional Version
Climate: South

2/24/2005

Location for weather data: Miami - Defaults: Latitude(25) Temp Range(L)
Humidity data: Interior RH (50%) Outdoor wet bulb (77F) Humidity difference(56gr.)

Winter design temperature	47	F	Summer design temperature	90	F
Winter setpoint	70	F	Summer setpoint	75	F
Winter temperature difference	23	F	Summer temperature difference	15	F
Total heating load calculation	**38471**	**Btuh**	**Total cooling load calculation**	**41549**	**Btuh**
Submitted heating capacity	% of calc	Btuh	Submitted cooling capacity	% of calc	Btuh
Total (Electric Strip)	88.4	34000	Sensible (SHR = 0.7)	118.0	42000
			Latent	301.6	18000
			Total	144.4	60000

WINTER CALCULATIONS

Winter Heating Load (for 1855 sqft)

Load component			Load	
Window total	304	sqft	8097	Btuh
Wall total	2080	sqft	17643	Btuh
Door total	40	sqft	423	Btuh
Ceiling total	1855	sqft	2226	Btuh
Floor total	275	ft	5115	Btuh
Infiltration	124	cfm	3135	Btuh
Subtotal			**36639**	**Btuh**
Duct loss			1832	Btuh
TOTAL HEAT LOSS			**38471**	**Btuh**

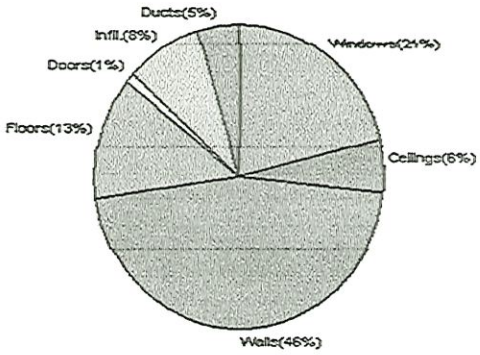

SUMMER CALCULATIONS

Summer Cooling Load (for 1855 sqft)

Load component			Load	
Window total	304	sqft	10505	Btuh
Wall total	2080	sqft	11770	Btuh
Door total	40	sqft	416	Btuh
Ceiling total	1855	sqft	4267	Btuh
Floor total			0	Btuh
Infiltration	108	cfm	1789	Btuh
Internal gain			3600	Btuh
Subtotal(sensible)			**32346**	**Btuh**
Duct gain			3235	Btuh
Total sensible gain			**35580**	**Btuh**
Latent gain(infiltration)			4129	Btuh
Latent gain(internal)			1840	Btuh
Total latent gain			**5969**	**Btuh**
TOTAL HEAT GAIN			**41549**	**Btuh**

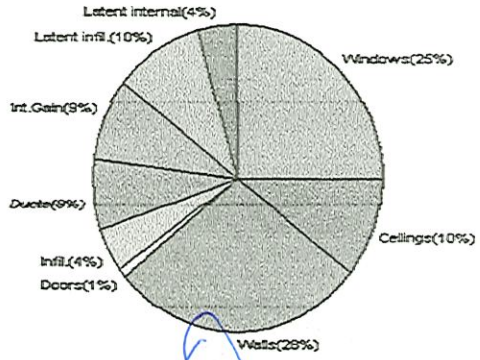

EnergyGauge® System Sizing based on ACCA Manual J.
PREPARED BY: _____
DATE: FEB 2 5 2005

Village Of Palmetto Bay Building Permit Card

18321 SW 87 AVE

Issue	Expiration
4/1/2005	9/28/2005

Contractors Approved

MASTER B-2005-1860 ADDITION ATTACHED P & H ADDITIONS

ADDITION ATTACHED P & H ADDITIONS

Building	Inspector	Date
Shutters		
Windows	[illegible]	9/9/05
Doors		
Patio Slab		
Screen Enclosure		
Pool Barrier		
Pool Steel		
Pool Deck		
Final		
Soil Statement	[illegible]	4/14/05
N.O.C	[illegible]	4/15/05

Shutters* Req for Final.

Mechanical	Inspector	Date		Inspector	Date
A/C Slab			Vac Sys		
A/C Rough	[illegible]	8/24/05	Fire Damp		
Doors			Boiler		
Patio Slab			Vent		
			Heating		
Fire			Fire Prot		
Fire Rough			Hood System		
Fire test			Dry Chem		
Final			Final		

Building	Inspector	Date
Foundation	[illegible]	4/15/05
Slab	[illegible]	5/20/05
Columns	[illegible]	5/20/05
Tie Beam	[illegible]	5/20/05
Sheathing	[illegible]	6/8/05
Tin Cap		
Truss		
Lathe	[illegible]	6/15/05
Framing	[illegible]	9/9/05
Insulation	[illegible]	4/14/05
Drywall	[illegible]	10/12/05
Mop in Progress		
Tile in progress		
Final		
Slab Comp test	[illegible]	5/20/05
(3pgs) Termite Treatment	[illegible]	5/20/05

See back [illegible] 4/14/05

Plumbing	Inspector	Date
Grd Rough	[illegible]	3-4-05
Cond Dr		
Water piping	[illegible]	7-14-05
Sewer	[illegible]	3-12-05
PVC Test		
Top out		
Heater		
Spr. System		
Inspector		
Roof Drain		
Pool MD		
Pool Piping		
Final		
Roofing		
Tin Cap		
Mop Inp		
Install Inp		
Final		

Electrical	Inspector	Date
Temp		
Service GND	[illegible]	4/18/05
Undrground		
Slab		
Rough OK	[illegible]	08/11/05
TV	[illegible]	
Tele		
Low Volt		
Alarm		
Poool Grd		
Pool Slab		
Pool Alarm		
Final		

OK REJECTED SEE NOTE

No Inspections will be conducted unless a Permit Card is displayed and approved plans are available

Warning to Owner: Your failure to to record a Notice of Commencement May result in your paying twice for improvements to your property. If you intend obtain financing, consult with your lender or an attorney before recording your Notice of Commencement. For inspection, call 305-259-1250

CFN 2005R0111011
OR Bk 23052 Pg 4384; (1pg)
RECORDED 02/03/2005 10:23:27
HARVEY RUVIN, CLERK OF COURT
MIAMI-DADE COUNTY, FLORIDA
LAST PAGE

STATE OF FLORIDA, COUNTY OF DADE
I HEREBY CERTIFY that this is a true copy of the original filed in this office on THIRD day of FEBRUARY A.D. 20 05
WITNESS my hand and Official Seal.
HARVEY RUVIN, CLERK, of Circuit and County Courts
By D.C.

CIRCUIT AND COUNTY COURTS CLERK IN GOD WE TRUST MIAMI-DADE COUNTY, FLORIDA

NOTICE OF COMMENCEMENT

A RECORDED COPY MUST BE POSTED ON THE JOB SITE AT TIME OF FIRST INSPECTION

PERMIT NO._____ TAX FOLIO NO._____

STATE OF FLORIDA:
COUNTY OF MIAMI-DADE:

THE UNDERSIGNED hereby gives notice that improvements will be made to certain real property, and in accordance with Chapter 713, Florida Statutes, the following information is provided in this Notice of Commencement.

1. Legal description of property and street/address: Lot 4, Block 85 Subd. "Section Twenty Two Bel-Aire" Plat Book 96 Page 5
18321 SW 87th Ave. Miami, Fl 33157

2. Description of improvement: Bedroom extension & to convert existing garage into gameroom.

3. Owner(s) name and address: Michelina Torres
18321 SW 87th Ave. Miami, Fl 33157

Interest in property:

Name and address of fee simple titleholder:

4. Contractor's name and address: P & H Additions, Inc.
3100 NW 72nd Ave #129 Miami, Fl 33122

5. Surety: (Payment bond required by owner from contractor, if any)

Name and address:

Amount of bond $

6. Lender's name and address:

7. Persons within the state of Florida designated by Owner upon whom notices or other documents may be served as provided by Section 713.13(1)(a)7., Florida Statutes,

Name and address:

8. In addition to himself, Owners designates the following person(s) to receive a copy of the Lienor's Notice as provided in Section 713.13(1)(b), Florida Statutes.

Name and address:

9. Expiration date of this Notice of Commencement: (the expiration date is 1 year from the date of recording unless a different date is specified)

Signature of Owner

Print Owner's Name Michelina Torres

Sworn to and subscribed before me this 01 day of Feb., 2005.

Notary Public

Print Notary's Name Brenda Dubon

My commission expires:

BRENDA DUBON
MY COMMISSION #DD256846
EXPIRES: OCT 08, 2007

Prepared by Raysa Machado

Address: 3100 NW 72nd Ave #129
Miami, Fl 33122

NOTICE OF COMMENCEMENT

A RECORDED COPY MUST BE POSTED ON THE JOB SITE AT TIME OF FIRST INSPECTION

PERMIT NO._____ TAX FOLIO NO._____

STATE OF FLORIDA:
COUNTY OF MIAMI-DADE:

THE UNDERSIGNED hereby gives notice that improvements will be made to certain real property, and in accordance with Chapter 713, Florida Statutes, the following information is provided in this Notice of Commencement.

1. Legal description of property and street/address: Lot 4, Block 85 Subd. "Section Twenty Two Bel-Aire" Plat Book 96 Page 5
18321 SW 87th Ave. Miami, Fl 33157

2. Description of improvement: Bedroom extension & to convert existing garage into gameroom.

3. Owner(s) name and address: Michelina Torres
18321 SW 87th Ave. Miami, Fl 33157

Interest in property: _____

Name and address of fee simple titleholder: _____

4. Contractor's name and address: P & H Additions Inc.
3100 NW 72nd Ave #129 Miami, Fl 33122

5. Surety: (Payment bond required by owner from contractor, if any)

Name and address: _____

Amount of bond $_____

6. Lender's name and address: _____

7. Persons within the state of Florida designated by Owner upon whom notices or other documents may be served as provided by Section 713.13(1)(a)7., Florida Statutes,

Name and address: _____

8. In addition to himself, Owners designates the following person(s) to receive a copy of the Lienor's Notice as provided in Section 713.13(1)(b), Florida Statutes.

Name and address: _____

9. Expiration date of this Notice of Commencement: (the expiration date is 1 year from the date of recording unless a different date is specified) _____

Signature of Owner

Print Owner's Name Michelina Torres

Sworn to and subscribed before me this 01 day of Feb., 2005.

Notary Public _____

Print Notary's Name Brenda Dubon

My commission expires: _____

BRENDA DUBON
MY COMMISSION #DD256846
EXPIRES: OCT 08, 2007

Prepared by Raysa Machado

Address: 3100 NW 72nd Ave #129
Miami, Fl 33122

123.01-52 PAGE 4 8/02

Village of Palmetto Bay
Department of Building and Capital Projects

NOTICE OF CIVIL INFRACTION TO OWNER AND CONTRACTOR

Date: **October 29, 2012**

Served via: Certified mail 7010 2780 0001 1706 7018

Contractor: P & H ADDITIONSINC Address of Contractor: 3100 NW 72 AVE
Property Owner: MICHELINA TORRES Property Owner Address: 18321 SW 87 AVE

Permit #: **BLD-2011-0690** Permit Address: 18321 SW 87 AVE

Folio no: 3350340140280 Case numbers: **BCV -2012-0030**

Dear Permit Holder/Contractor:

The property owner and contractor are hereby notified that the above referenced permit has expired, mandatory inspections have not been conducted, and/or you have abandoned the job. This is a violation of the provisions of the 2007 Florida Building Code.

You have committed a violation of: Sections 109.1, and 105.4.1.1 of the 2007 Florida Building Code; "Failure to obtain mandatory inspections, and allowing permit to expire."

REQUIREMENTS FOR CORRECTION:

Contractor and Property Owner shall each pay a **one-time fine of $200.00** and correct the violation on or before **(30)** days. To correct the violation you are to:

(1) Renew the expired Palmetto Bay Permit number **BLD-2011-0690.**

(2) Alternatively, obtain a demolition permit and obtain approved inspection (s) as required by the 2007 Florida Building Code.

(3) The property shall be brought into full compliance with the Florida Building Code prior to the expiration of the periods provided herein, subject to the provision of Miami-Dade County Code Section 8-5.

(4) You are advised to contact the Village of Palmetto Bay Building Department at (305) 259-1250 and ask to speak to a permit clerk or email at www.buildingdepartment@palmettobay-fl.gov.

FAILURE TO COMPLY:

1. Failure of Contractor to comply wit this Notice of Civil Citation will result in a filing of a complaint with the Miami-Dade Probable Cause Board which may recommend disciplinary action up to and including suspension of license, **and may result in disqualification of the Contractor from pulling permits within the Village of Palmetto Bay.**

2. If you (both Contractor and Property Owner) fail to pay the Civil Fine within the time limit specified above or you fail to file, in writing, a request for an administrative appeal hearing within 20 days from receipt of the Civil Infraction Notice, you shall be deemed to have waived your right to contest the notice of infraction at an appeal hearing and such waiver shall constitute an admission of the violation.

3. Payments and requests for hearing should be submitted in writing and directed to: The Village of Palmetto Bay, 9705 E. HIBISCUS ST, Palmetto Bay, Florida 33157, Telephone: 305-259-1272.

4. Hearings will be set no sooner than 20 days from the date of the Civil Infraction Notice and all parties will be notified at the mailing address shown on this notice.

5. You may be liable for reasonable costs of the administrative hearing (appeal hearing), as well as the Village's costs and expenses incurred as a result of investigation, enforcement, testing, or monitoring upon a finding by the special master that the infraction shall be upheld; that the violation was committed.

6. You may appear with or without counsel, and produce witnesses on your own behalf.

7. You may be liable to a penalty of up to $250.00, per day for repeat violators, which may be imposed by the special master upon a violation that a violation was committed.

8. Liens in the amount of unpaid infractions and/or due to a final order of the special master shall be filed against your real or personal property and a foreclosure action instituted thereafter.

Edward Silva, C.B.O., R.A.
Building Director Building and Capital Projects

Renewal 8/18/2011

18321 SW 87 AVE

PALMETTO BAY FL 33157

MASTER PERMIT # B-2005-1860

EXPIRED 4/10/2006

LAST INSPECTION: LATH APPROVED 10/15/2005 –

BY A. RIVAS

ELECTRICAL: EL-2005-918

LAST INSPECTION: ROUGH APPROVED 8/17/2005 –

BY T. MENENDEZ

PLUMBING: PL-2005-819

LAST INSPECTION: TUB & WATER PIPE APPROVED 7/15/2005-

BY D. DEJONGE

ROOF: BRF-2005-532

LAST INSPECTION: TILE PLACING APPROVED 8/11/2005

ATTACHED UP LIFT TEST

FINAL INSPECTION REJECTED 1. MISSING GAS VENT INSP

2 NEED REVISION ON PLANS TO SHOW GAS VENT –

BY A RIVAS

MECHANICAL: #ME-2005-911

LAST INSPECTION: 2ND PARTIAL ROUGH APPROVED 8/25/2005

BY R. REGULA

Village of Palmetto Bay

Bldg B 2005-1860
El-2005-918
PL-2005-819
BTR-2005-98
(no inspection.)
BRF-2005-532
ME-2005-911

Printed: 8/18/2011

VE

NS

Permit Number: B-2005-1860

005
05-10528
g

Inspector: ANGEL RIVAS
Status: Denied
Passed? ☐

UST BE REQUESTED AT DADE COUNTY OFFICE
2. MISSING TIE DOWN @ BATH WINDOW'S SIDE AND 48" APART
3. MISSING INSIDE CORNER BAR @ N.E. AND S.E. CORNER
4. ATTACHED SOIL STATEMENT

Comments:

Inspection Date: 4/15/2005
Inspection Number: INS-2005-10566
Inspection Type: Building

Inspector: ANGEL RIVAS
Status: Approved
Passed? ☑

Required Steps: OK. NOC OK.

Comments:

Inspection Date: 5/20/2005
Inspection Number: INS-2005-11423
Inspection Type: Building

Inspector: ANGEL RIVAS
Status: Approved
Passed? ☑

Required Steps: 1. ATTACHED COMPACTION TEST . 2. TERMITE TREATMENT-- 3 PAGES

Comments:

Inspection Date: 6/8/2005
Inspection Number: INS-2005-11860
Inspection Type: Building

Inspector: ANGEL RIVAS
Status: Approved
Passed? ☑

Required Steps: SHEATHING ONLY

Comments: Truss / Bracing.

Inspection Date: 6/15/2005
Inspection Number: INS-2005-12063
Inspection Type: Building

Inspector: ANGEL RIVAS
Status: Approved
Passed? ☑

Required Steps:

Comments:

Inspection Date: 9/2/2005

Inspector: ANGEL RIVAS

Inspection Number: INS-2005-14196
Inspection Type: Building
Status: Denied
Passed? ☐

Required Steps: CUT STUDS
Comments: FRAMING INSP.

Inspection Date: 9/9/2005
Inspection Number: INS-2005-14295
Inspection Type: Building
Inspector: ANGEL RIVAS
Status: Approved
Passed? ☑

Required Steps:
Comments:

Inspection Date: 9/14/2005
Inspection Number: INS-2005-14402
Inspection Type: Building
Inspector: ANGEL RIVAS
Status: Approved
Passed? ☑

Required Steps:
Comments:

Inspection Date: 10/12/2005
Inspection Number: INS-2005-15039
Inspection Type: Building
Inspector: ANGEL RIVAS
Status: Approved
Passed? ☑

Required Steps:
Comments: Lath - 10/12/05

Other Fields:

A Rivas.

Village of Palmetto Bay
8950 SW 152nd Street
Palmetto Bay, FL 33157
305-259-1234

Inspections

Printed: 8/18/2011

Address: 18321 SW 87 AVE

Applicant: SHINE MAINTENANCE ELECTRICAL **Permit Number:** EL-2005-918

Inspection Date: 4/18/2005 **Inspector:** TOMAS MENENDEZ
Inspection Number: INS-2005-10589 **Status:** Approved
Inspection Type: Electrical **Passed?** ☑
Required Steps: FOUNDATION GROUNDING
Comments:

Inspection Date: 7/27/2005 **Inspector:** TOMAS MENENDEZ
Inspection Number: INS-2005-13119 **Status:** Approved
Inspection Type: Electrical **Passed?** ☑
Required Steps: WORK WITH
Comments:

Inspection Date: 8/16/2005 **Inspector:** FeLIX POUSA
Inspection Number: INS-2005-13712 **Status:** Denied
Inspection Type: Electrical **Passed?** ☐
Required Steps: (INSPECTOR'S NOTES ARE ILLEGIBLE-- REFER TO PERMIT CARD ON JOB SITE)
Comments:

Inspection Date: 8/17/2005 **Inspector:** TOMAS MENENDEZ
Inspection Number: INS-2005-13763 **Status:** Approved
Inspection Type: Electrical **Passed?** ☑
Required Steps: ROUGH APPROVED
Comments:

Other Fields:

Village of Palmetto Bay
8950 SW 152nd Street
Palmetto Bay, FL 33157
305-259-1234

Inspections

Printed: 8/18/2011

Address: 18321 SW 87 AVE

Applicant: G & L PLUMBING SERVICE **Permit Number:** PL-2005-819

Inspection Date: 5/4/2005 **Inspector:** David De Jonge
Inspection Number: INS-2005-11019 **Status:** Approved
Inspection Type: Plumbing **Passed?** ☑
Required Steps: GROUND ROUGH
Comments:

Inspection Date: 5/12/2005 **Inspector:** David De Jonge
Inspection Number: INS-2005-11214 **Status:** Approved
Inspection Type: Plumbing **Passed?** ☑
Required Steps: SEWER/RELAY APPROVED
Comments:

Inspection Date: 7/13/2005 **Inspector:** David De Jonge
Inspection Number: INS-2005-12751 **Status:** CANCELLED
Inspection Type: Plumbing **Passed?** ☐
Required Steps: CANCELLED BY BRENDA ON 7/13/05
Comments: WATER PIPE INSP

Inspection Date: 7/14/2005 **Inspector:** David De Jonge
Inspection Number: INS-2005-12871 **Status:** Approved
Inspection Type: Plumbing **Passed?** ☑
Required Steps: TUB & WATER PIPE APPROVED
Comments: WATER PIPE INSP.

Other Fields:

Village of Palmetto Bay
8950 SW 152nd Street
Palmetto Bay, FL 33157
305-259-1234

Inspections

Printed: 8/18/2011

Address: 18321 SW 87 AVE

Applicant: DELG BROTHERS ROOFING CORP **Permit Number:** BRF-2005-532

Inspection Date: 7/26/2005 **Inspector:** RiCHARD ANNESE
Inspection Number: INS-2005-13105 **Status:** Denied
Inspection Type: Roofing **Passed?** ☐

Required Steps: MISSING DRIP EDGE METAL . NO PERMIT CARD.

Comments:

Inspection Date: 7/27/2005 **Inspector:** RiCHARD ANNESE
Inspection Number: INS-2005-13134 **Status:** Approved
Inspection Type: Roofing **Passed?** ☑

Required Steps: NEED NOC FOR NEXT INSP./ CAPSHEET HOTMOP /INPROGRESS APPROVED 7/27/2005

Comments:

Inspection Date: 8/10/2005 **Inspector:** ANGEL RIVAS
Inspection Number: INS-2005-13514 **Status:** CANCELLED
Inspection Type: Roofing **Passed?** ☐

Required Steps: CANCELLED

Comments:

Inspection Date: 8/11/2005 **Inspector:** ANGEL RIVAS
Inspection Number: INS-2005-13599 **Status:** Approved
Inspection Type: Roofing **Passed?** ☑

Required Steps: TILE PLACING APPROVED 8/11/05

Comments:

Inspection Date: 8/19/2005 **Inspector:** ANGEL RIVAS
Inspection Number: INS-2005-13856 **Status:** Denied
Inspection Type: Roofing **Passed?** ☐

Required Steps: 1. MISSING GAS VENTILATION INSP. 2. NEED REVISION ON PLANS TO SHOW GAS VENT. 3. ATTACHED UPLIFT TEST

Comments:

Other Fields:

Village of Palmetto Bay
8950 SW 152nd Street
Palmetto Bay, FL 33157
305-259-1234

Inspections

Printed: 8/18/2011

Address: 18321 SW 87 AVE

Applicant: CAMP AIR, INC

Permit Number: ME-2005-911

Inspection Date: 8/5/2005
Inspection Number: INS-2005-13445
Inspection Type: Mechanical
Inspector: Ron Regula
Status: Denied
Passed? ☐

Required Steps: NOT READY, HANG ALL DUCT, FINISH JOB

Comments:

Inspection Date: 8/17/2005
Inspection Number: INS-2005-13828
Inspection Type: Mechanical
Inspector: Ron Regula
Status: PARTIAL
Passed? ☐

Required Steps: ROUGH DUCT -PARTIAL APPROVED

Comments:

Inspection Date: 8/24/2005
Inspection Number: INS-2005-14000
Inspection Type: Mechanical
Inspector: Ron Regula
Status: PARTIAL
Passed? ☐

Required Steps: PARTIAL APPROVED 8/24/2005 BY R.REGULA

Comments:

Other Fields:

P & H ADDITIONS INC.
ADDITIONS • SWIMMING POOLS • HOMES

RECEIVED
FEB 10 2012
By

February 9, 2012

Village of Palmetto Bay
Building & Capital Projects Department
9705 E. Hibiscus Street
Palmetto Bay, Fl. 33157

Att: Edward Silva - Director

Ref: 18321 SW 87th Ave.
Permit # BLD-2011-0690 (OLD # B-2005-1860)

Dear Sir:

After receiving your letter dated Sept. 28, 2011, approving the permit renewal of the above reference address, I attempted to contact the owner's in order to make plans and finalize the project.

The owner owes us a balance of $5,420.00 dollars for the project. I was attempting to set a payment schedule for the balance but they never answered my calls or letters. Unfortunately without this payment I am unable to finish the project.

I don't believe that they are completely aware of the consequences they could be facing if this permit is not closed.

I would like to request your help, by informing the owner's through a letter from the building department of the consequences they will be facing if this permit is left open; I hope this will motive them to contact us so we could close out the permit.

Thank you in advance for your cooperation. If you need any additional information please do not hesitate to contact me at (305)418-9433 (o) (786)367-4156 (c).

Sincerely yours,

Leonel Valladares
State General Contractor
CGC004647

c.c. Mr. & Mrs. Torres
18321 SW 87th Ave.
Palmetto Bay, Fl. 33157

CERTIFIED MAIL # 7003 1680 0004 3600 8871

3100 N.W. 72 Ave. Unit 129 Miami, Florida 33122 • Phone: (305) 418-9433 • Fax: (305) 418-9435

Village of Palmetto Bay
Building & Capital Projects Department

RENEWAL

Date: 9/28/2011

Contractor: P & H ADDITIONS INC

Re: # BLD-2011-0690 OLD # B-2005-1860

Address: 18321 SW 87 AVE

Dear Applicant:

In compliance with Florida Building Code Section 104.1.5, please be advised that the application and/or plans for the above referenced project have been **reviewed and approved** by the Village of Palmetto Bay Building and Planning Department.

You now have one hundred and eighty (180) calendar days from the date of this letter during which to obtain the permit at the Village's Building and Capital Projects Department between the permit processing hours of 7:30 a.m. and 4:30 p.m.

Failure to obtain the necessary permit and pay the application fees during the allotted one hundred and eighty (180) days period will be considered an abandonment of the application, thereby voiding and nullifying the review process. Any plans or documents in the processing file will be discarded.

If you have any questions regarding the content of this letter, please feel free to contact our office at (305) 259-1256 and request to speak with the Permit Clerk.

Village of Palmetto Bay

Edward Silva, C.B.O., R.A.
Director
Department of Building & Capital Projects

Cc:

MICHEKINA TORRES
18321 SW 87 AVE
PALMETTO BAY, FL 33157

SENDING REPORT

Sep. 28 2011 10:11AM

YOUR LOGO :
YOUR FAX NO. : 3052591290

NO.	OTHER FACSIMILE	START TIME	USAGE TIME	MODE	PAGES	RESULT
01	93054189435	Sep. 28 10:10AM	01'00	SND	01	OK

TO TURN OFF REPORT, PRESS 'MENU' #04.
THEN SELECT OFF BY USING '+' OR '-'.

FOR FAX ADVANTAGE ASSISTANCE, PLEASE CALL 1-800-HELP-FAX (435-7329).

Jackie Villegas

From: Allen White
Sent: Monday, June 11, 2012 1:58 PM
To: Edward Silva
Cc: Jackie Villegas; Vanessa Bencomo
Subject: 18321 Southwest 87 Avenue B-2005-1860, BCV-2011-0017, BLD-2011-0690

FYI, I received a complaint in reference to the addition, and Noticed that the permit is currently expired, and that there may have not been any inspections. The addition is done and according to the complainant is being habituated. Please advise.

Allen White
Code Compliance Senior Code Officer
Village of Palmetto Bay
Department of Planning and Zoning
9705 E. Hibiscus Street
Palmetto Bay, Florida 33157
305-259-1273 Office
786-338-7432 Fax
www.palmettobay-fl.gov

6/25/12.

Any notice of violations need to go
to code compliance.
after 30 days Responsed. day.

P & H ADDITIONS INC.
ADDITIONS • SWIMMING POOLS • HOMES

VPB
07-28-11
BLDG DIV

July 19, 2011

Village of Palmetto Bay
Building Department
9705 E. Hibiscus Street
Palmetto Bay, Fl. 33157

Att: Jackie
Building Supervisor

Ref: 18321 SW 87th Ave.
Permit # B-2005-1860
Case # BCV-2011-0017

Dear Sirs:

Hereby I would like to inform you that it has been impossible to communicate with the owners of the property mentioned above by phone.

Although I will continue to insist, I have decided to send them a certified letter which I am sending you a copy.

I will continue to keep you aware of anything that happens.

Thank you for the attention to the present.

Kind regards,

Leonel Valladares
State General Contractor

Planon
Exp Cabinet

30 days until answer.
as per E. Silva

3100 N.W. 72 Ave. Unit 129 Miami, Florida 33122 • Phone: (305) 418-9433 • Fax: (305) 418-9435

P & H ADDITIONS INC.

ADDITIONS • SWIMMING POOLS • HOMES

July 19, 2011

Mr. Mishart Torres &
Mrs. Michelina Torres
18321 SW 87th Avenue
Palmetto Bay, Fl. 33157

Dear Mr. & Mrs. Torres:

For the past few days we have tried to communicate with you, but have been impossible. It is in reference to the attached letter, we received on the part of the Village of Palmetto Bay.

It is very important that you contact me as soon as possible. My office phone number is (305) 418-9433.

Thank you for the attention to the present,

Kind regards.

Leonel Valladares
State General Contractor

CC: Village of Palmetto Bay

CERTIFIED MAIL # 7000 0600 0027 5419 8869

3100 N.W. 72 Ave. Unit 129 Miami, Florida 33122 • Phone: (305) 418-9433 • Fax: (305) 418-9435

9/14/12. meeting w/ mr. Silva.

Leonel Valladares

Contractor.

BLD 2011-0690

Contractor has sent several notice to owner, no answer from the owners —

As per mr. Silva the violation will be sent to owner to see if any action will take place. No ~~against~~ Action Take place against Contractor since we have letters on file from all the communications and letter of attent to comply with the owner to Building department.

P & H ADDITIONS, INC.
3100 N.W. 72nd Ave. #129
Miami, Fl. 33122

MIAMI FL 331
20 JUL 2011 PM 6 T

USA FIRST-CLASS FOREVER

Village of Palmetto Bay
Building Department
9705 E. Hibiscus Street
Palmetto Bay, Fl. 33157

Att: Jackie - Building Supervisor

3315745606

CERTIFIED MAIL™

7003 1680 0004 3600 8871

UNITED STATES POSTAL SERVICE

1000

33157

U.S. POSTAGE
PAID
MIAMI,FL
33152
FEB 09, '12
AMOUNT
$5.75
00032065-12

P & H ADDITIONS, INC.
3100 N.W. 72nd Ave. #129
Miami, Fl. 33122

Village of Palmetto Bay
Building & Capital Projects Department
9705 E. Hibiscus Street
Palmetto Bay, Fl. 33157

Att: Edward Silva - Director

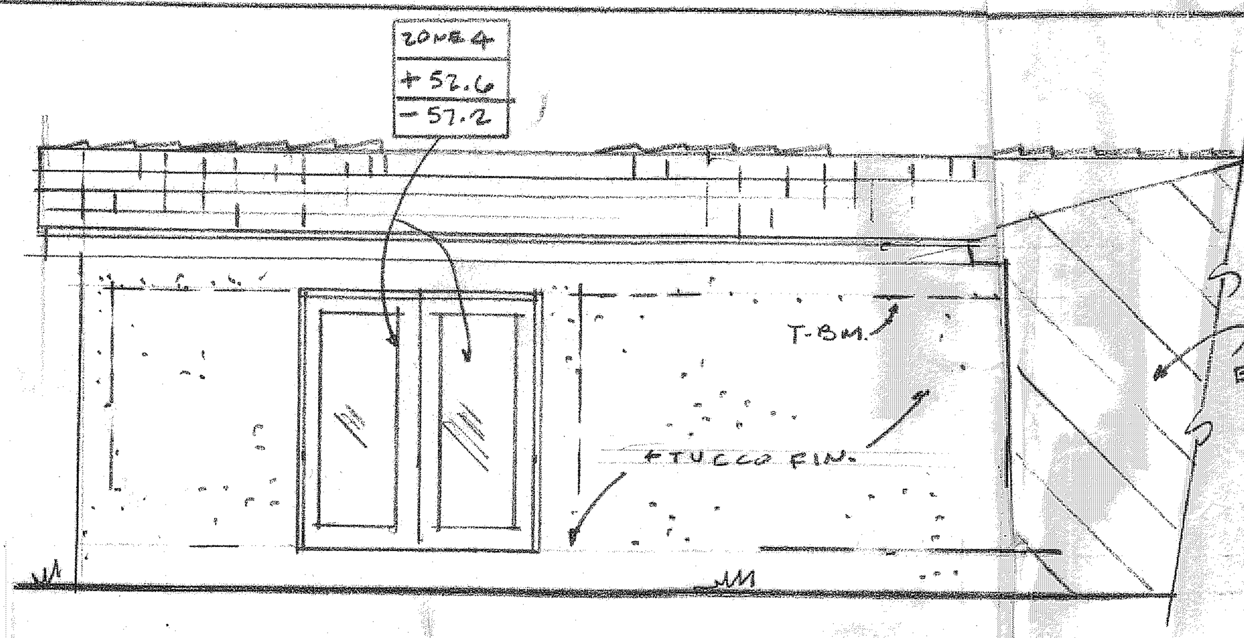

-LEFT SIDE ELEVATION-

SCALE: 1/4"=1'-0" (TYP.)

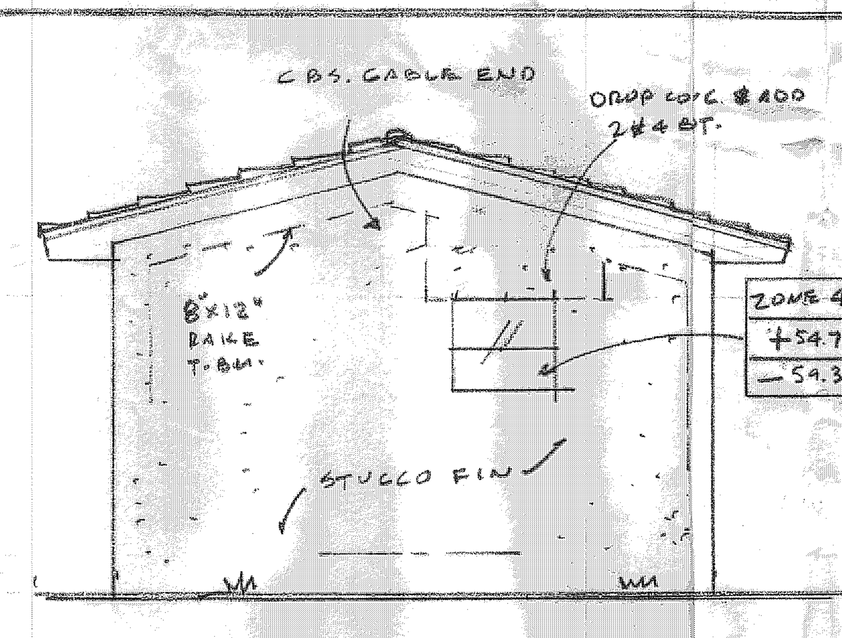

-REAR ELEVATION-

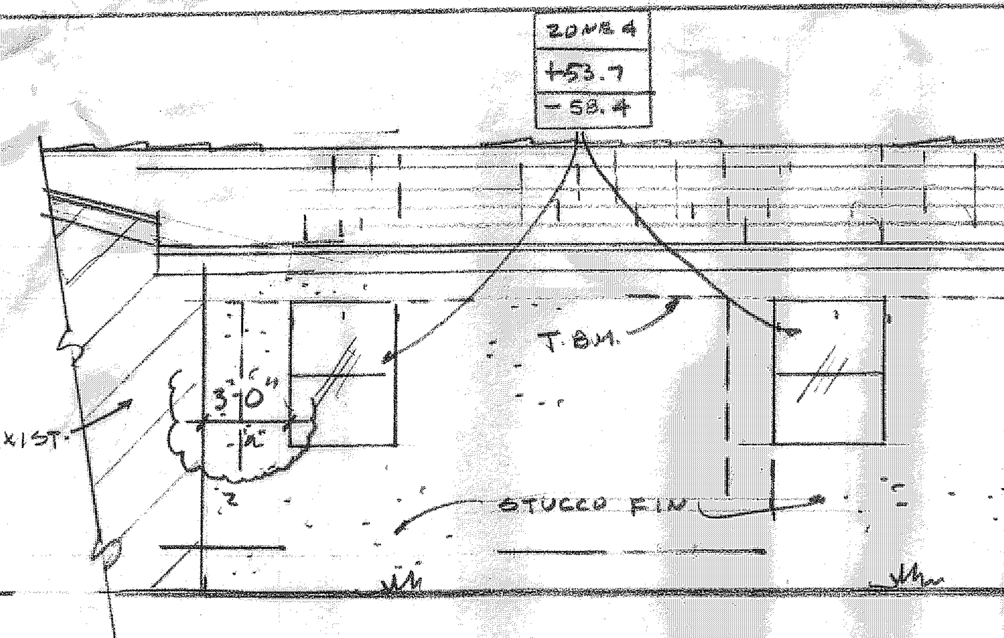

-RIGHT SIDE ELEVATION-

TERMITE PROTECTION AS PER F.B.C. 2001

B1816.1.7 TERMITE PROTECTION. ALL BUILDINGS SHALL HAVE PRE-CONSTRUCTION TREATMENT PROTECTION AGAINST SUBTERRANEAN TERMITES. THE RULES AND LAWS AS ESTABLISHED BY THE FLORIDA DEPARTMENT OF AGRICULTURE AND CONSUMER SERVICES SHALL BE DEEMED AS APPROVED WITH RESPECT TO PRE-CONSTRUCTION SOIL TREATMENT FOR PROTECTION AGAINST SUBTERANEAN TERMITES. A CERTIFICATE OF COMPLIANCE SHALL BE ISSUED TO THE BUILDING DEPARTMENT BY THE LICENSED PEST CONTROL COMPANY THAT CONTAINS THE FOLLOWING STATEMENT:

"THE BUILDING HAS RECEIVED A COMPLETE TREATMENT FOR THE PREVENTION OF SUBTERRANEAN TERMITES. TREATMENT IS IN ACCORDANCE WITH RULES AND LAWS ESTABLISHED BY THE FLORIDA DEPARTAMENT OF AGRICULTURE AND CONSUMER SERVICES".

B1042.6 CERTIFICATE OF PROTECTIVE TREATMENT FOR PREVENTION OF TERMITES. A WEATHER RESISTANT JOBSITE POSTING BOARD SHALL BE PROVIDED TO RECEIVE DUPLICATE TREATMENT CERTIFICATES AS EACH REQUIRED PROTECTIVE TREATMENT IS COMPLETED, PROVIDING A COPY FOR THE PERSON THE PERMIT IS ISSUED TO AND ANOTHER COPY FOR THE BUILDING PERMIT FILES. THE TREATMENT CERTIFICATE SHALL PROVIDE THE PRODUCT USED,IDENTITY OF THE APPLICATOR TIME AND DATE OF THE TREATMENT, SITE LOCATION, AREA TREATED, CHEMICAL USED, PERCENT CONCENTRATION AND NUMBER OF GALLONS USED, TO ESTABLISH A VERIFICABLE RECORD OF PROTECTIVE TREATMENT: IF THE SOIL CHEMICAL BARRIER METHOD FOR TERMITE PREVENTION IS USED, FINAL EXTERIOR TREATMENT SHALL BE COMPLETED PRIOR TO FINAL BUILDING APPROVAL.

B1042.7 NOTICE OF TERMITE PROTECTION. A PERMANENT SIGN WHICH IDENTIFIES THE TERMITE TREATMENT PROVIDER AND NEED FOR RE-INSPECTION AND TREATMENT CONTRACT RENEWAL SHALL BE PROVIDED. THE SIGN SHALL BE POSTED NEAR THE WATER HEATER OR ELECTRIC PANEL.

BATHS AND CLOSETS LOCKS NOTE

EVERY CLOSET DOOR LATCH SHALL BE SUCH THAT CHILDRENS CAN OPEN THE DOOR FROM INSIDE THE CLOSET.
EVERY BATHROOM DOOR LOCK SHALL BE DESIGNED TO PERMIT THE OPENING OF THE LOCKED DOOR FROM THE OUTSIDE IN AN EMERGENCY.
NO DOOR IN ANY MEANS OF ESCAPE SHALL BE LOCKED AGAINST EGRESS WHEN THE BUILDING IS OCCUPIED.

EGRESS WINDOW NOTE:

AN OUTSIDE WINDOW OR DOOR OPERABLE FROM THE INSIDE WITHOUT THE USE OF TOOLS AND PROVIDING A CLEAR OPENING OF NOT LESS THAN 20" IN WIDTH, 24" IN HEIGHT AND 5.7 # IN AREA THE BOTTOM OF THE OPENING SHALL NOT BE MORE THAN 44" OFF THE FLOOR.

ELECTRICAL CONDITIONS

PANEL DESIGNATION: "A" EXISTING
"240/120 VOLTS 1 PHASE" "3" WIRE SOLID NEUTRAL
AMPERE BUS :"150"(30CKT.) AMPERE MAIN : "MLO"
AMPERE INT.CAP.: "10K"
FEEDER: "3 #1 &1#6 (EGC)THHN/THWN Cu. IN 1 1/2" C. NEC TABLE310.15(B)(6) 150 A.
FED FROM: " METER COMBO "
LOCATION: "INSIDE"
MOUNTING: "FLUSH"

NOTES	CKT	KVA	DESCRIPTION	WIRE	COND	BRK	A	B	BRK	COND	WIRE	DESCRIPTION	KVA	CKT	NOTES
1	1	1.200	MICROWAVE	#12	1/2"	20	2.700		20	1/2"	#12	SMALL APPL.	1.500	2	5
1	3	1.000	REFIGERATOR	#12	1/2"	20		2.500	20	1/2"	#12	SMALL APPL.	1.500	4	5
4&9	5	1.100	BATHROOM GFCI	#12	1/2"	20	2.600		20	1/2"	#12	LAUNDRY CKT	1.500	6	5
4	7	1.100	GEN.LIGHTING	#14	1/2"	15		2.200	15	1/2"	#14	NEW GEN.LIGHTING(AFCI)	1.100	8	4&12 NEW
4	9	1.100	GEN.LIGHTING	#14	1/2"	15	6.100		50D	3/4"	#6	A.H.U.	5.000	10	1,2&3
1&3	11	1.000	A/C CONDENSOR	#10	1/2"	30D		6.000	50D	3/4"	#6	A.H.U.	5.000	12	1,2&3
1&3	13	1.000	A/C CONDENSOR	#10	1/2"	30D	2.200		20	1/2"	#12	DISHWASHER	1.200	14	1
1	15	0.300	POOL LIGHT	#14	1/2	15		6.300	50D	3/4"	#8	RANGE	6.000	16	7
1	17	1.440	POOL PUMP	#12	1/2"	20	7.440		50D	3/4"	#8	RANGE	6.000	18	7
1	19	1.440	POOL PUMP	#12	1/2"	20		2.240	20	1/2"	#12	DISPOSAL	0.800	20	1
8	21	2.250	W.H.	#10	1/2"	30D	3.450		20	1/2"	#12	WASHER	1.200	22	1
8	23	2.250	W.H.	#10	1/2"	30D		4.750	30D	1/2"	#10	DRYER	2.500	24	6
4	25	1.100	GEN.LIGHTING	#14	1/2"	15	3.600		30D	1/2"	#10	DRYER	2.500	26	6
	27	0.000	SPACE					1.100	15	1/2"	#14	NEW GEN.LIGHTING(AFCI)	1.100	28	4&12 NEW
	29	0.000	SPACE				0.000					SPACE	0.000	30	

KVA	CONNECTED LOAD	63.180	28.090	25.090	DEMAND FACTOR 0.630
KVA	DEMAND LOAD	33.503			
	DEMAND AMPERES	139.598	D-DOUBLE POLE BREAKER		

NOTES
1-VERIFY WIRING AND OVERCURRENT SIZE WITH NAME PLATE.
2-NEC 220.3 (100% OF THE NAMEPLATE RATING OF THE CENTRAL ELECTRIC SPACE HEATING).
3-NEC 220.21 NONCOINCIDENT LOADS.
4-NEC TABLE 220.3(A)(WATTS PER SQ.FT.). 2253 SQ.FT X 3 WPERSQ.FT. = 6759 W DIVIDE BYG.LTS CKTS 6 1126.5 WATTS
5-NEC 210.11(C) (1),(2) & 220.16 (SMALL APPLIANCES & LAUNDRY LOAD).
6-NEC 220.18 (DRYERS).
7-NEC 220.19 (ELECTRIC RANGES).
8-NEC 220.32 (C) (3)(WATER HEATER).
9-NEC 210.11 (C) (3)(BATHROOM BRANCH CIRCUITS).
10-NEC 220.30(B) (3).
11-ROMEX AND ENT ALLOWED.
12-NEC210.12 (B) AFCI BREAKERS IN DWELLING UNIT BEDROOMS

FLOOD LEGEND
Additions, Remodeling, Repairs & Combination

FOLIO: ______ ADDRESS: 18321 SW. 87 AVE MIAMI
LOT/UNIT: 4 BLOCK/BLDG: 85
SUBDIVISION: BEL-AIR SEC. 22 PLAT BOOK: 96 PAGE: 5

COST OF CONSTRUCTION- SCOPE OF WORK
INTERIOR RENOVATION- COST OF WORK (MUST INCLUDE ITEMIZED LIST): $______
ADDITION- COST OF WORK- ______ SQ.FT. OF CONST. X (47 SQ.FT. LIVING SPACE): $______
______ SQ.FT. OF CONST. X (35 SQ.FT. STORAGE, GARAGE, TERRACE): $______
TOTAL COST OF WORK: $______

	Lowest Floor Elev.(including basement/sunken areas)	Garage/ Storage Floor Elevation	Adjacent Grade Elevation (next to the wall of the structure)
EXISTING	11.04	(N/A)	9.3
PROPOSED	FT. NGVD	FT. NGVD	FT. NGVD

THE OWNER OF THIS PROPERTY UNDERSTANDS THAT THE WORK AMOUNT INDICATED ABOVE IS GOING TO BE KEPT ON THE OFFICIAL PERMIT RECORD DURING A SIX (6) MONTH PERIOD FROM THE DATE OF WHICH THE CERTIFICATE OF COMPLETION IS ISSUED. IF ANY ADDITIONAL, REPAIR, RECONSTRUCTION, ALTERATION, ADDITION, REMODELING OR COMBINATION THEREOF IS DONE BEFORE THE CERTIFICATE OF COMPLETION IS ISSUED, OR WITHIN THE TRACKING PERIOD, IT WILL BE CONSIDERED A CONTINUANCE OF THE ABOVE WORK. IF THE PROPERTY IS DECLARED SUBSTANTIALLY IMPROVED OR DAMAGED AND THE FLOOR ELEVATION IS NOT IN COMPLIANCE, THE STRUCTURE WILL BE ELEVATED IN ACCORDANCE WITH CHAPTER 11C OF THE MIAMI-DADE COUNTY CODE.

0' - 0' = NGVD

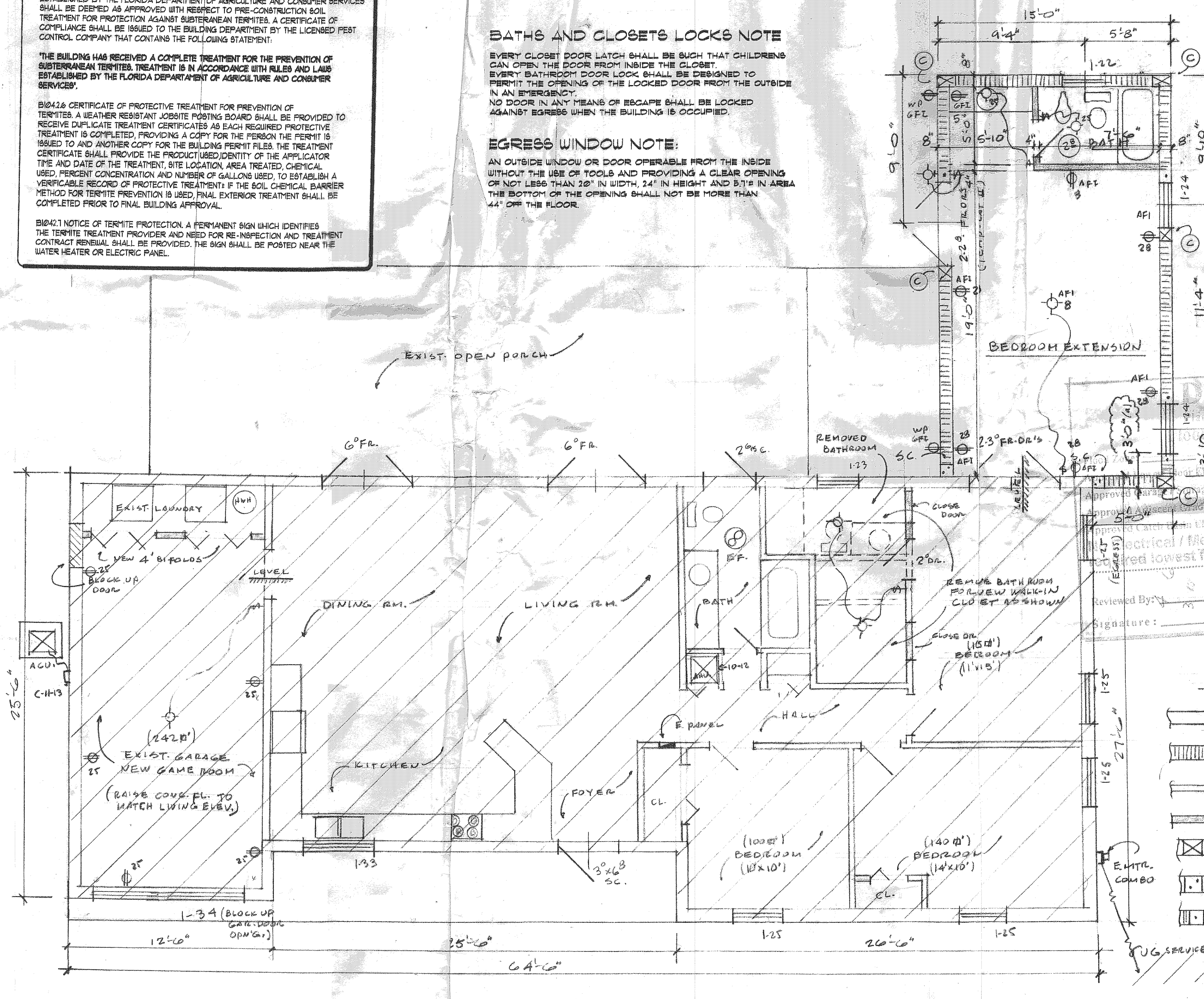

-FLOOR PLAN-

SCALE: 1/4"=1'-0"

ELECTRICAL RISER DIAGRAM NTS.

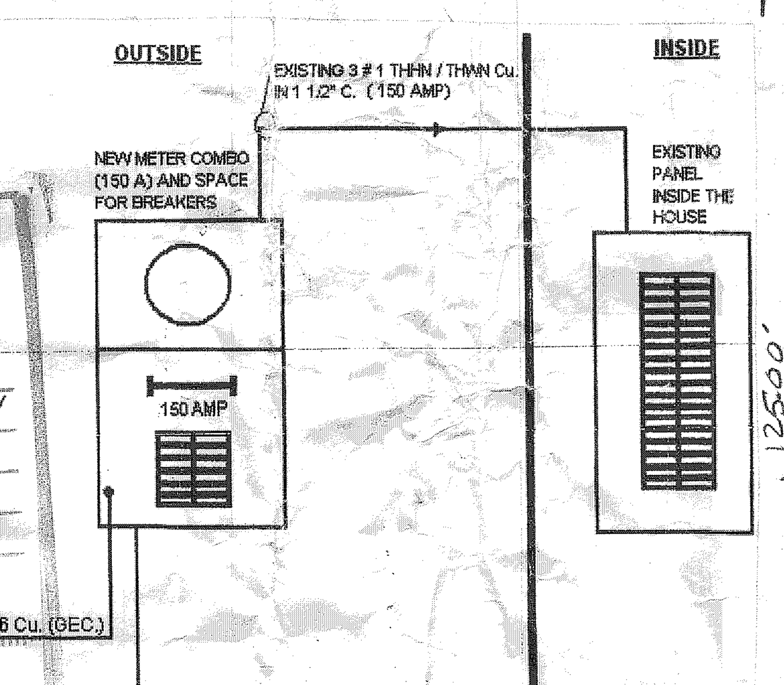

DERM
Floodplain Review
Base Flood Elevation:
TO MATCH EXISTING 11.09'
Approved Garage...
Approved Adjacent Grade Elevation:
Approved Catch Basin Elevation:
Electrical / Mechanical equip. below the required lowest floor elevation
APPROVED
Reviewed By:
Signature:

ZONING CALCULATIONS

EXIST. RESIDENCE - 1666 #
PROPOSED ADDITION - 375 # (23%)
NEW TOTAL COVER - 2041 #

LEGEND

EXIST. 8" C.B.S. WALLS
PROPOSED 8" C.B.S. WALLS
EXIST. 4" WD. FR. WALLS
PROP. 4" WD FR WALLS
C 8"x12" CONC CO L. 4#5 VERT. #3 TIES 12" o/c
S.C. - 8"x8" CONC. COL. W/ 2 #5 VERT.
T. DWN - 1 #5 VERT. IN CONC. FILLED BLOCK CELL
AREA OF EXIST RESIDENCE

120 X 125 = 15000
64.6 X 27.6 = 1783
15 X 25 = 375
13.35 X 12 = 667.5
2826

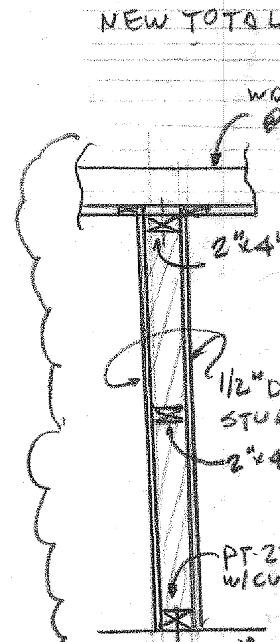

INTERIOR PARTITION DETAIL (SCALE 1/4"=1'-0")

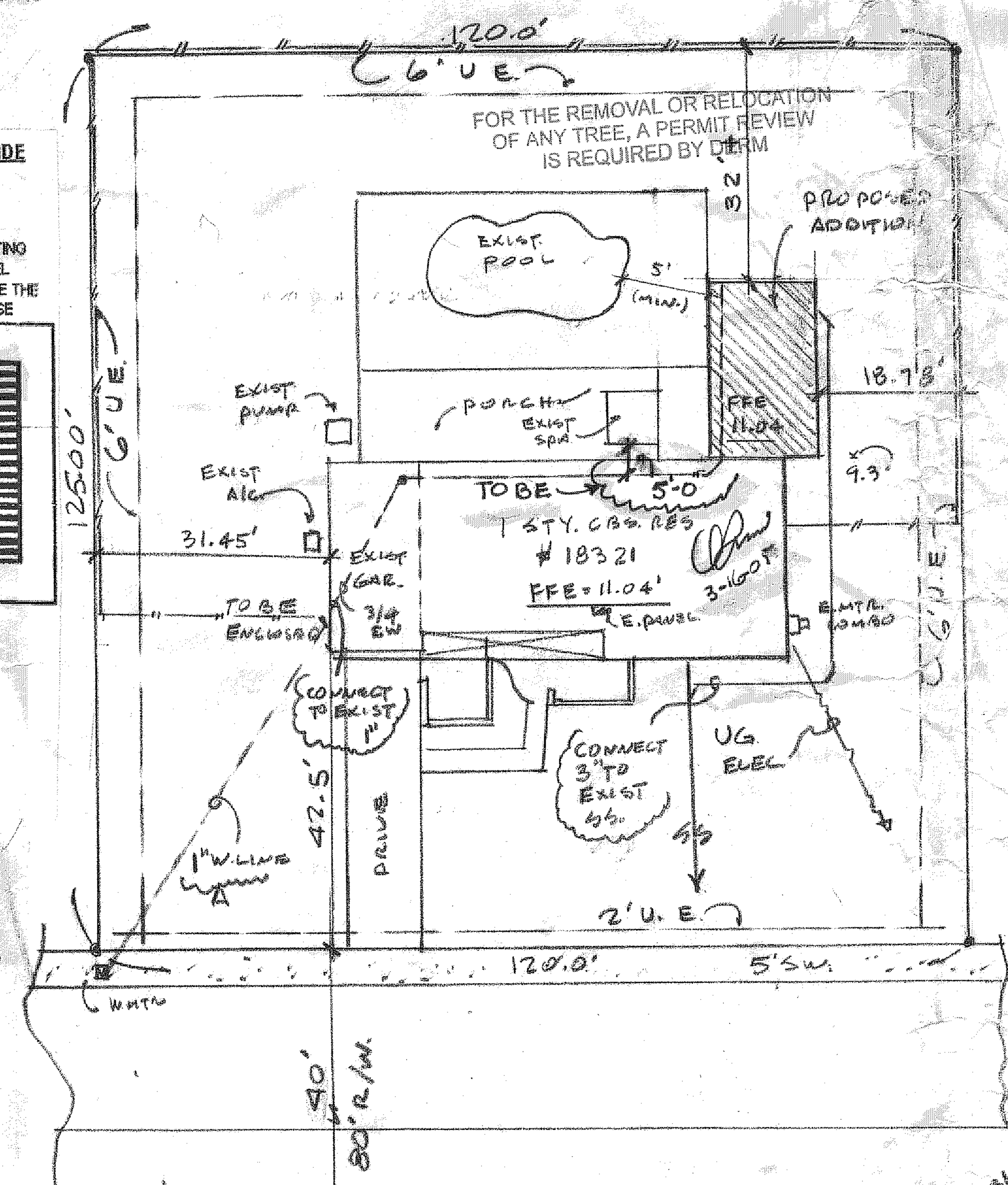

VILLAGE OF PALMETTO BAY
BUILDING DEPARTMENT
BUILDING SECTION
APPROVED BY:
DATE: 3/11/05

-SITE PLAN-

SCALE: 1"=20'

LEGAL-

LOT-4, BLK-85;
BEL-AIRE SEC. 22,
PB-96-P-5;
DADE CO-

P & H. ADDITIONS INC.
3100 NW. 72ND AVE. UNIT-129 (305) 264-8042

ADDITION TO RESIDENCE
FOR MR. & MRS. MISHART TORRES
AT: 18321 SW. 87TH AVE, MIAMI, FL

FEB 2 5 2005

orlando m. fortun
CONSULTING ENGINEERS, P.A.
CIVIL / STRUCTURAL
P.E. 22249
7220 S.W. 39th TERRACE MIAMI, FLORIDA, 33155
TEL - (305) 262-6225 FAX- (305) 262-2014

JOB NUMBER
04-001-AA

11-17-04

8371

1/1

FLOOR - CLOS - DRIVE - TERMITE REV.

1990

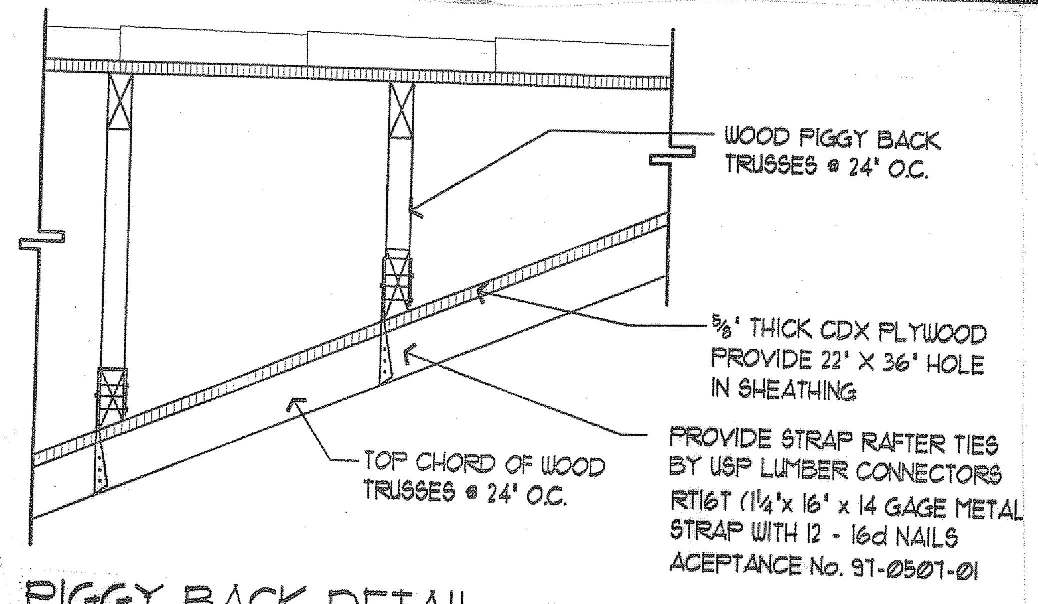

PIGGY BACK DETAIL

SCALE - ¾" = 1'-0"

SPECIAL NOTES:

1. UNDERGROUND WASTE LINES:
   a. MINIMUM SIZE OF LINES: 2" @ 1/4" / FT. GRADE.
   b. LINES 3" & ABOVE: @ 1/8" /FT. GRADE.
   c. BUILDING DRAIN SHALL HAVE A UNIFORM SLOPE OF 1/8" / FT.
2. SLOPE OF HORIZONTAL PIPING:
   a. HORIZONTAL DRAINAGE PIPING 2" & SMALLER: @ 1/4" / FT. GRADE
   b. HORIZONTAL DRAINAGE PIPING 3" & LARGER: @ 1/8" /FT. GRADE
3. FURNISH ANTI-SCALD VALVES FOR BATHTUBS AND SHOWERS.
4. FURNISH VACUUM BREAKERS FOR HOSE BIBBS.

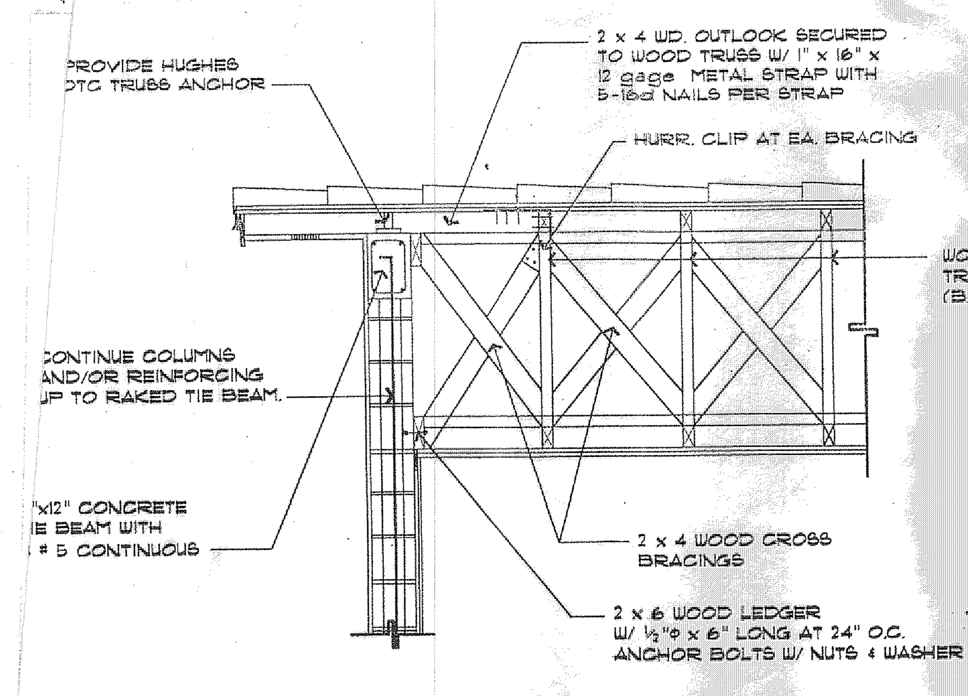

GABLE END DETAIL

SCALE: ½" = 1'-0"

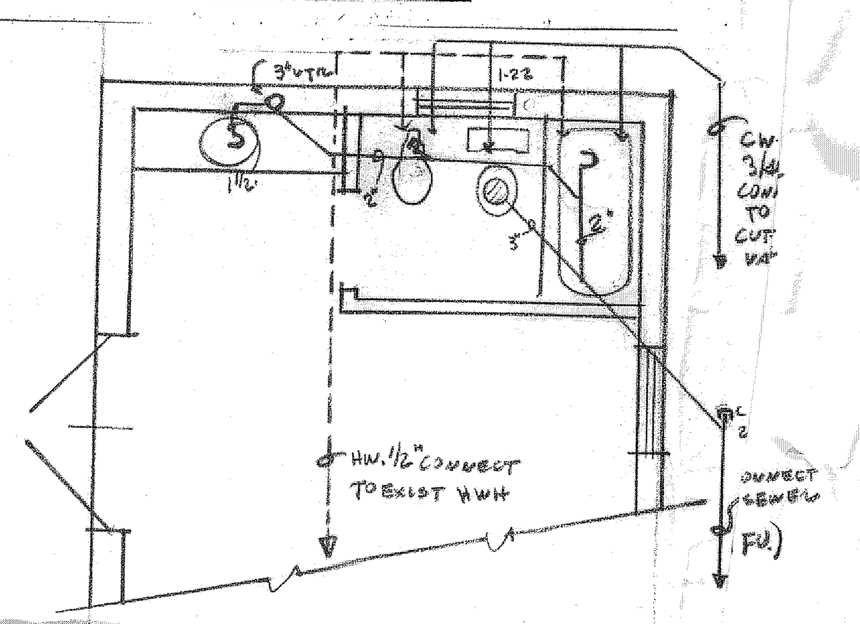

— C.W. - 3/4"
— H.W. - 1/2"

PLUMBING FLOOR PLAN (N/A) SEE P-1

SCALE 1/4"=1'-0"

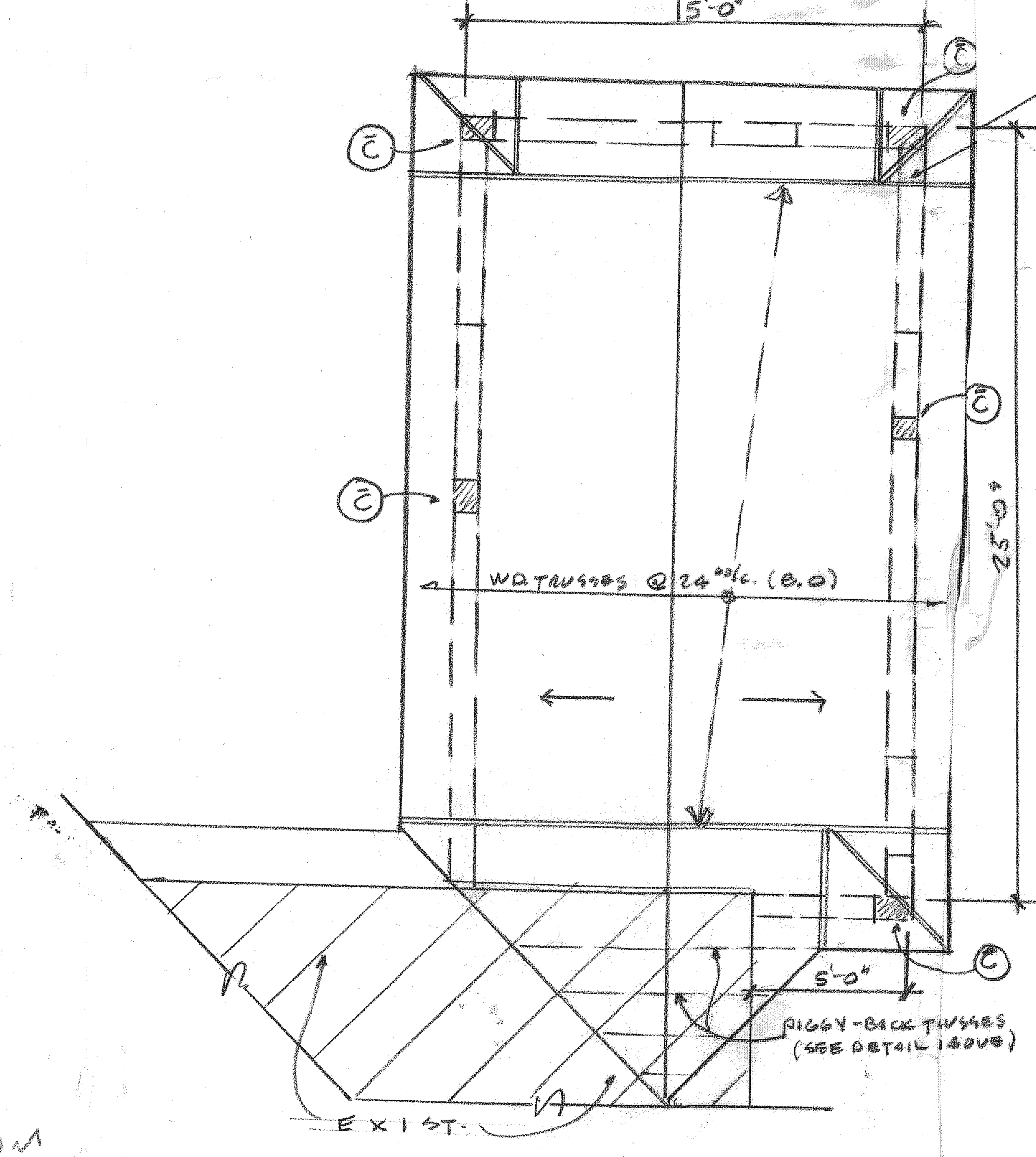

ROOF FRAMING PLAN

SCALE: 1/4"=1'-0"

2 PM

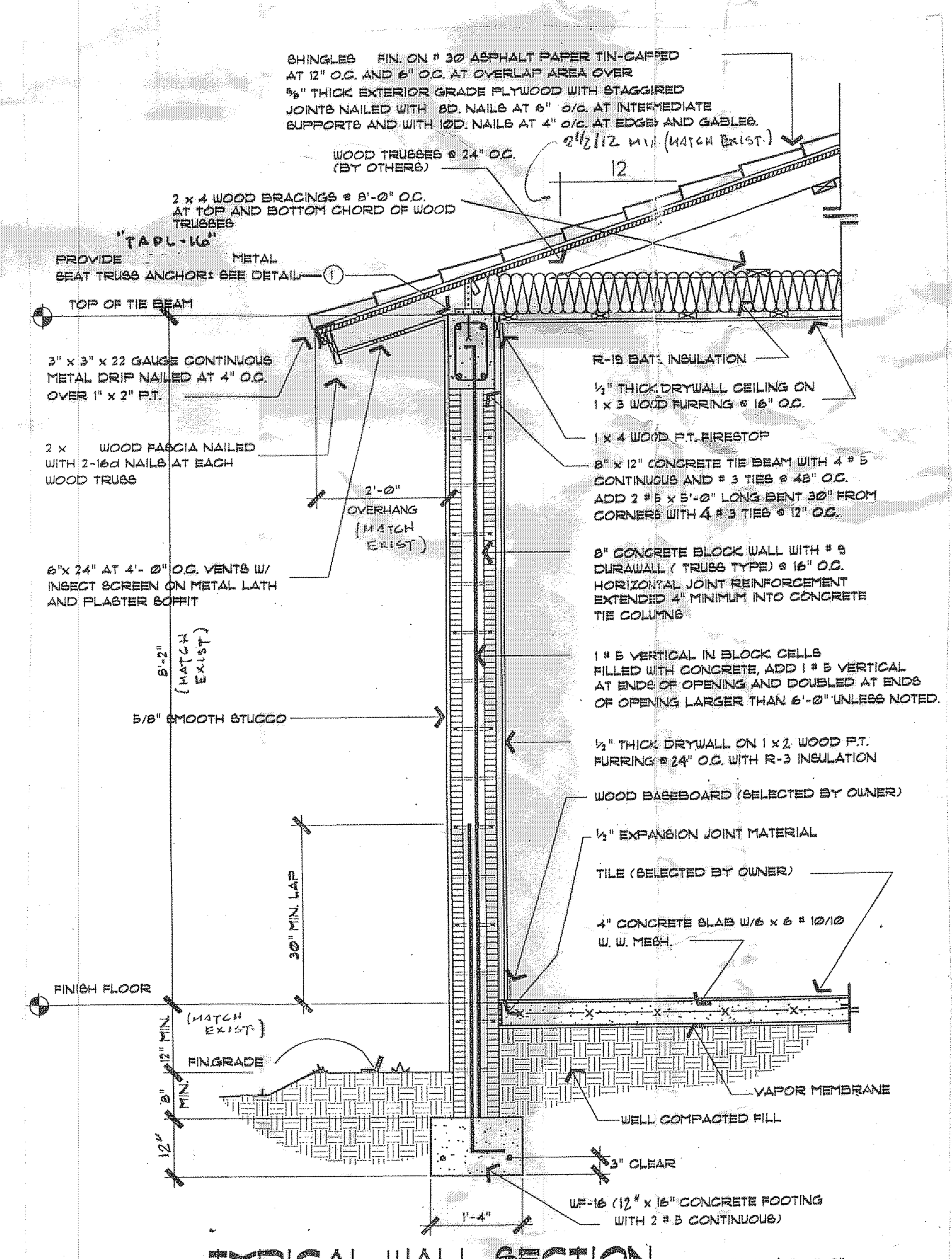

TYPICAL WALL SECTION

SCALE- ¾" = 1'-0"

SOIL STATEMENT

SOIL CONDITION AT SITE BY VISUAL INSPECTION INDICATES AN ALLOWABLE BEARING CAPACITY OF 2000 P.S.F. (UNDISTURBED SAND AND/OR ROCK) UPON COMPLETION OF EXCAVATION WE WILL VISUALLY INSPECT THE PREMISES TO SUBMIT A LETTER CERTIFYING THAT TO THE BEST OF OUR KNOWLEDGE, BELIEF AND PROFESSIONAL JUDGMENT THE CONDITIONS ENCOUNTERED ARE SIMILAR TO THOSE DESCRIBED ABOVE, AND THAT THE BOTTOM OF THE FOUNDATIONS TRENCHES HAS BEEN PROPERLY HAND TAMPERED TO OUR SATISFACTION.

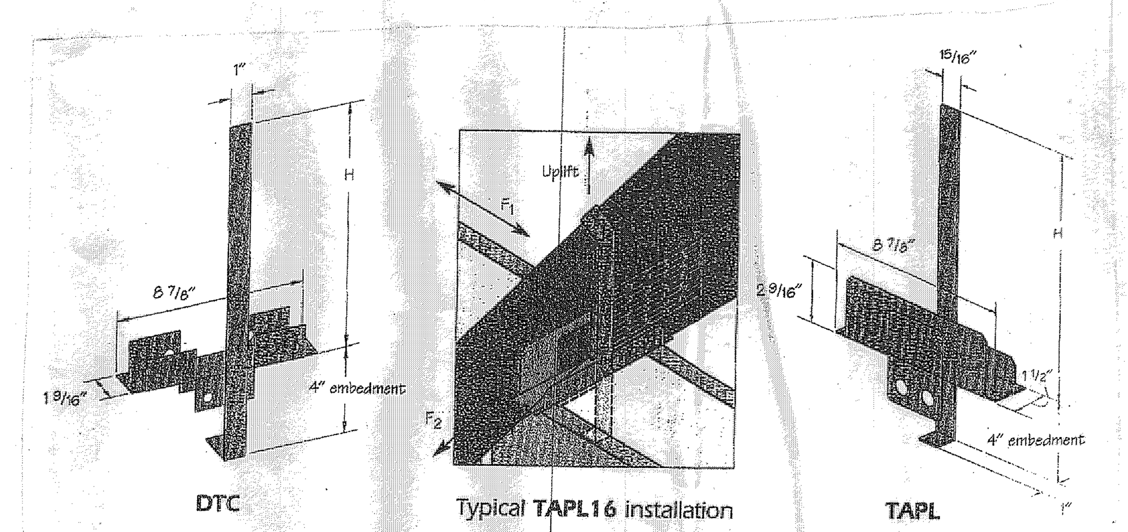

DETAIL (1)

USP Stock No.	Ref. No.	Steel Gauge	Dimensions Out of Concrete H	Fastener Schedule[2,3] Seat Plate	Truss/ Rafter	DF-L / SYP F1 133%	DF-L / SYP F2 133%	DF-L / SYP Uplift 133%	DF-L / SYP Uplift 160%	S-P-F F1 133%	S-P-F F2 133%	S-P-F Uplift 133%	S-P-F Uplift 160%
TAPL12	HETAL16	14	12	(6) 10d x 1-1/2	(11) 10d	595	880	1350	1350	595	880	1350	1350
TAPL14	--	14	14	(6) 10d x 1-1/2	(13) 10d	595	880	1350	1350	595	880	1350	1350
TAPL16	HETAL20	14	16	(6) 10d x 1-1/2	(13) 10d	595	880	1350	1350	595	880	1350	1350
DTC	HETAL12	14	12-3/4	(4) 10d x 1-1/2	(9) 10d	850	980	1105	1330	420	635	720	865

Allowable Loads (Lbs.)[1]

1) Allowable loads have been increased 33-1/3% or 60% for wind and seismic loads; no further increase shall be permitted.
2) Minimum nail penetration shall be 1-3/4" for 10d nails.

"TAPL-16" TRUSS ANCHOR

TRUSS ANCHORS PRODUCT APPROVAL NUMBERS : "U.S.P. MANUFACTURER INC." TAPL-16 (N.O.A.- 02-0102.03 EXP. JAN.11,07)

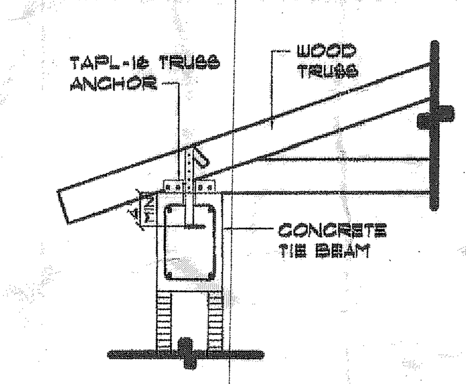

TRUSSES TO BE ANCHORED TO CONCRETE TIE BEAM AS FOLLOWS:

(A) - USE TAPL- 16 WITH 13- 10d NAILS x 1-1/2" LONG TO TRUSS AND 6- 10d NAILS AT SEAT FOR TRUSSES WITH UPLIFTS UP TO 1,350 LBS.

(A') - UPLIFTS UP TO 2,300 # USE STRAP (A) WITH ADDITIONAL "U.S.P." TA-16 TRUSS ANCHOR(1"x 16" x 14 GAUGE) EMBEDDED 4" IN CONCRETE W/ 9-10d NAILS IN TRUSS.

(A") -UPLIFTS UP TO 2,700# USE 2-PLY GIRDERS WITH 2- TAPL-16 (ONE EACH SIDE OF GIRDERS) W/ SAME NAILING PATTERN DESCRIBED IN A.

UPLIFTS LARGER THAN 2,700# USE DETAILS --(B)-(B')-(C)-(D)

(B) - FOR TRUSSES WITH UPLIFT UP TO 6,000#.

(B') - FOR TRUSSES WITH UPLIFT UP TO 8,000#.

(C) - FOR GIRDERS WITH UPLIFT UP TO 16,250#.

(D) - FOR GIRDERS WITH UPLIFT UP TO 24,000#.

ROOF LOADS:

USING ANSI-ASCE 7-98 FLA. BLDG. CODE LATEST EDITION

ASSUME EXPOSURE C
BUILDING CATEGORY I

1. DEAD LOADS (P.S.F.)
   - 1.1 TRUSSES/RAFTERS = 5
   - 1.2 ROOFING = 10
   - 1.3 CEILING = 10
   - TOTAL DEAD LOADS = 25 P.S.F.
   - TOTAL LIVE LOADS = 30 P.S.F.
   - W = 55 P.S.F.
2. WIND LOADS (P.S.F.) — EQ. TABLES (PARAGRAPH) (PAGE)
   - q h= 0.00256 x Kz x I x (v) 2 — EQ. 6.1 (6.5.1) (17)
   - Kz= .85 Kh= .85 — TABLE 6.3 (6.5.2) (17)
   - V = 146 M.P.H — FIG. 6.1 (19)
   - I = 1.15 — TABLE 6.2 (6.5.2) (17)
   - qzh= 0.00256 x (146) 2 x (1.15) x Kz, h
   - qz= 62.75 x .85 (Kz)= 53 P.S.F
   - qh= 62.75 x .85 (Kh)= 53 P.S.F
3. FACTORED WIND LOADS (P.S.F.)
   - q ROOF= qh x(G x Cp1 G C pi) EQ.TABLE 6.1 (16)
   - 3.1 = FIND. h/L. θ TO DETERMINE Cp
   - h/L= 13/15=
   - ANGLE φ = ARCTAN (3/12) = 12° Cp=(.70) FIG. 6.3 (PAGE 21)
   - 3.2=FIND GUST. FACTOR
   - G= 0.85 (EXPOSURE C,D φ 6.61 (PAGE 34)
   - 3.3=FIND INTERNAL PRESSURE COEFF. GCpi= .18 TABLE 6.4 (PAGE 31)
   - q ROOF=53 x (0.85 x .70+ .18) = 41
   - UPLIFT qh G x Cp GCpi
   - q ROOF= 41 P.S.F.
4. TOTAL NET UPLIFT LOADS (P.S.F.)
   - U= qROOF= D.L.= -10 = P.S.F
   - qROOF 1.1 ABOVE
   - U = 31 P.S.F (BUT USE MIN.)= 41 P.S.F
5. TOTAL GRAVITY LOADS (P.S.F.)
   - G= qROOF - D.L. = 30 + 25= 55 P.S.F
   - qROOF 1.1ABOVE (L.L)
   - G=55 P.S.F

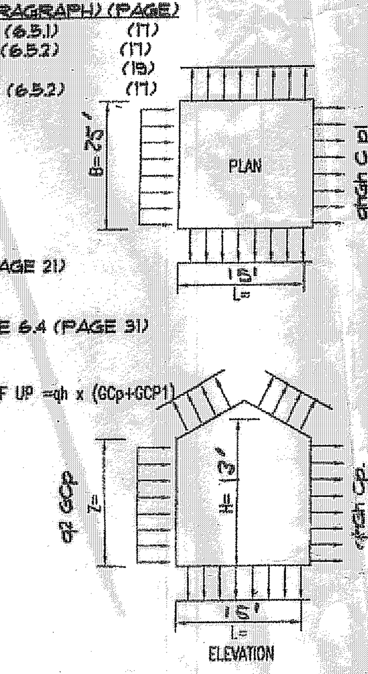

GENERAL & STRUCTURAL NOTES

1. GENERAL
   COORDINATE STRUCTURAL DRAWINGS WITH ARCHITECTURAL, MECHANICAL AND ELECTRICAL DRAWINGS. VERIFY ALL DIMENSIONS, LOCATE DEPRESSED SLABS SLOPES DRAINS, OUTLETS, RECESSES BOLT SETTING SLEEVES, INSERTS, ETC. ALL STRUCT. OPENINGS AROUND OR AFFECTED BY MECHANICAL, ELECTRICAL AND PLUMBING EQUIPMENT SHALL BE VERIFIED WITH EQUIPMENT PURCHASED BEFORE PRECEEDING WITH STRUCTURAL WORK AFFECTED ANY DISCREPANCIES NOTIFY ARCHITECT OR ENGINEER. SHALL COMPLY WITH THE LATEST REQUIREMENTS AND ALL LOCAL CODES GOVERNING THE INSTALLATION, SEE PLANS FOR ADDITIONAL NOTES.
2. ALLOWABLE SOIL BEARING PRESSURE:
   FOOTING SIZES AND REINFORCEMENT HAVE BEEN DESIGNED FOR AN ALLOWABLE SOIL BEARING PRESSURE OF 2000 P.S.F. ALL FOOTINGS SHALL BE CARRIED TO UNDISTURBED MEDIUM SAND OR ROCK AND TO AT LEAST THE DEPTH SHOWN ON THE DRAWINGS.
3. CONCRETE NOTE:
   ALL CONCRETE TO ATTAIN A MINIMUM COMPRESSIVE STRENGTH OF 3000 P.S.I. IN 28 DAYS. AGGREGATES TO BE CLEAN AND WELL GRADED, MAXIMIZE SIZE 1" CONCRETE SLUMP 3" MINIMUM TO 5" MAXIMUM, SLABS ON GRADE TO BE 2500 P.S.F. IN 28 DAYS.
4. CONCRETE COVER AS FOLLOWS:

	BOTTOM	TOP	SIDES
GRADE BEAM/FOOTING	3"	2"	2"
BEAM	1 1/2"	1 1/2"	1 1/2"
COLUMNS	-	-	1 1/2"
SLABS	1"	1"	1"

5. REINFORCING STEEL:
   TO BE NEW HIGH STRENGTH BILLET STEEL DEFORMED AS PER ASTM A-305 AND CONFORMING TO AST A-615, GRADE 60. LAP CONTINUOUS BAR 30 BAR DIAMETERS, HOOK DISCONTINUOUS END OF ALL TOP BARS.
6. CONCRETE BLOCK WALLS:
   AS SHOWN IN STRUCTURAL DRAWINGS TO BE ERECTED BEFORE PLACING CONCRETE IN ADJACENT BEAMS AND COLUMNS. PROVIDE HORIZONTAL JOINT REINFORCING @ EVERY 2ND COURSE (16" VERTICAL) FOR ALL EXTERIOR WALLS. USE STANDARD NO. 8 TRUSS TYPE MASONRY REINFORCING AND EXTEND 4" INTO THE COLUMNS OR INTO STRUCTURAL COLUMNS WITH APPROVED METHODS. AND USE NO. 8 LADDER TYPE REINFORCING FOR REINFORCED MASONRY CONSTRUCTION.
7. WOOD TRUSSES:
   TO BE MANUFACTURED AND INSTALLED IN ACCORDANCE WITH THE SOUTH FLORIDA BUILDING CODE. SHOP DRAWINGS TO BE SUBMITTED FOR APPROVAL PRIOR TO FABRICATION. DESIGN LIVE LOAD 30 PSF AND DEAD LOAD 21 PSF. PLYWOOD SHEATHING SHALL HAVE STAGGERED JOINTS AND SHALL BE NAILED WITH 8d COMMON NAILS NOT LESS THAN TWO IN 6"BD. OR THREE IN EACH 8" BD. AT EACH SUPPORT. NAILS SPACING SHALL BE 4" C/C AT PANEL EDGES AND 6" C/C @ INTERMEDIATE SUPPORTS. PROVIDE A 1"X4" WD. MEMBERS NAILED TO THE UPPERSIDE OF THE LOWER CHORD AT PANEL SPACED @ 8'-0" C/C AT WOOD TRUSSES.
8. SLABS ON FILL:
   FILL AND BACK FILL TO BE COMPACTED TO 95% OF THE MAXIMUM DENSITY AT OPTIMUM MOISTURE AS DETERMINED BY THE STANDARD PROCTOR TEST. COMPACTION LAYERS TO EXCEED 8" SLAB ON FILL TO BE PLACED ON A CHECKERBOARD PATTERN WITH POURS LIMITED TO 600 SF. OR 25 FT. IN ANY DIRECTION. WAIT 24 HRS. BETWEEN POURS.
9. ALL WOOD:
   ALL WOOD IN CONTACT WITH MASONRY SHALL BE PRESSURE TREATED. ALL WOOD SOUTHERN PINE # 2, 19 % MAX. MOISTURE WITH Fb=1250 PSI, E=1500000 PSI.
10. CONTRACTOR:
   CONTRACTOR SHALL PROVIDE ALL NECESSARY SHOP DRAWINGS FOR APPROVAL AS REQUIRED. ANY DISCREPANCIES ON THE DRAWINGS SHALL BE TO THE ATTENTION OF THE ARCHITECT OR ENGINEER BEFORE PRODCEEDING WITH THE WORK. ALL ELECTRICAL AND PLUMBING WORK SHALL BE DONE ACCORDING TO SFBC. OR ANY LOCAL OR STATE CODES COVERING THE INSTALLATION.

VILLAGE OF PALMETTO BAY
BUILDING DEPARTMENT
BUILDING SECTION
APPROVED BY:
DATE:

VOID

orlando m. fortun
CONSULTING ENGINEERS, P.A.
CIVIL / STRUCTURAL
P.E. 22249
1720 S.W. 39th TERRACE MIAMI, FLORIDA, 33155
TEL.- (305) 262-6225 FAX- (305) 262-2614

JOB NUMBER
04-001-AA

FOR P & H ADDITIONS INC.
3100 NW. 72nd AVE. UNIT # 129 (305) 264-8042

ADDITION TO RESIDENCE
FOR: MR & MRS. NISHART TORRES
AT: 18321 SW 87th AVE MIAMI, FL.

FEB 2 5 2005

11-17-04		# 8371	2/2

AC SPLIT UNIT SCHEDULE

CONDENSING UNIT	MARK	AC-1 CU	
	SENSIBLE CAPACITY, BTUH	41100	
	TOTAL CAPACITY, BTUH	60000	
	COMPRESSOR, QUANTITY/FLA. EA.	1/23	
	CONDENSER FAN, FLA EA.	3	
	VOLTAGE/PHASE	240-1-60	
	DESIGN SELECTION MODEL TRANE	TTY060B100A	
	UNIT WEIGHT, LBS	349	
FANCOIL UNIT	MARK	AC-1 FCU	
	SUPPLY AIR VOLUME, CFM	1800	
	FRESH AIR VOLUME, CFM	-	
	EXTERNAL STATIC PRESSURE, INCH W.G.	.40	
	ELECTRIC HEATER, KW	10	
	MOTOR, HP	3/4	
	VOLTAGE/PHASE	240-1-60	
	DESIGN SELECTION MODEL TRANE	TWE060P013FB	
SYSTEM	SEER	12.40	
	REFRIGERANT LINES SUCTION/LIQUID	1-1/8" / 3/8"	
	NOMINAL SIZE (TONS)	5	
	AREA SERVED:	WHOLE HOUSE	

NOTE : PROVIDE ROOM THERMOSTATS- LOW VOLT.

FAN SCHEDULE

MARK	TYPE	CFM	ESP IWG	RPM	DRIVE	WATTS	VOLTAGE	MANUFACTURER	MODEL	CONTROL	AREA SERVED
EF-1	CEILING	50	1/8	1700	DIRECT	50	120-1-60	PENN	Z1	LIGHT-SWITCH	TOILETS

NOTE : FANS WITH INTEGRAL BACKDRAFT DAMPER.

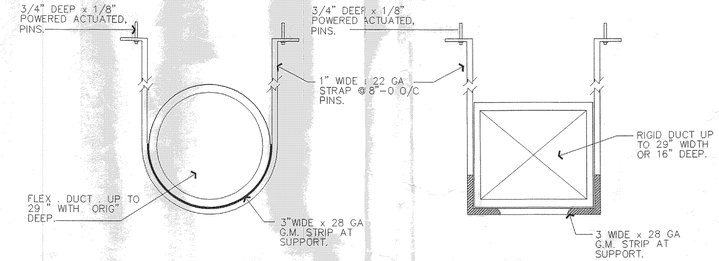

DUCT SUPPORT DETAILS

NTS

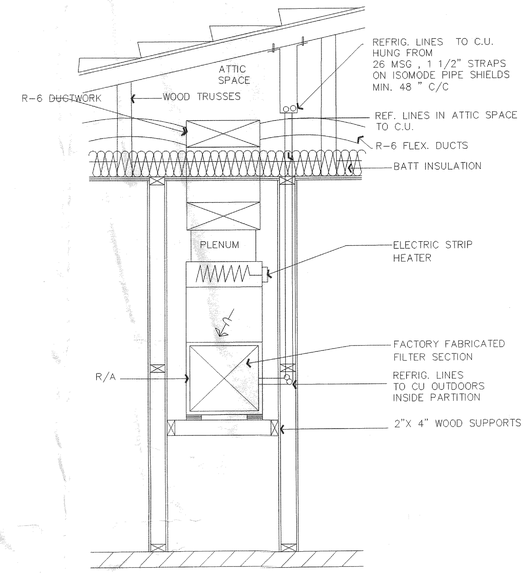

A/C EQUIPMENT CLOSET DETAIL

GENERAL NOTES-HVAC

01- all work shall conform to the latest edition of the florida building code and applicable state and local ordinances.
02- contractor shall warrant all work to be free of defects in workmanship and materials for a period of one year after acceptance of project.
03- provide all the necessary instructions to the owner, including all required printed materials, in the operation of the mechanical systems.
04- provide equipment maintenance and instruction manuals,etc. to the owner submit architect/engineer for approval.
05- submit equipment, accesories, controls, ductwork, etc. shop drawings before proceeding with the purchase or installation of same.
06- provide all the necessary access panels to valves, fire dampers, etc as may be required.
07- balance all air systems to within 10% of quantities shown on plans.
08- all work must be coordinated with all other trades prior to execution of same.
09- a/c contractor must obtain his own permit and pay for all required fees.
10- conditioned ductwork shall be as follow:
class I fiberboard, coated internally, R-6 value to SMACNA'S fiberglass duct manual.
and applicable state and local ordinances.
11- ventilation ductwork shall be galv. sheetmetal per SMACNA'S LOW PRESSURE METAL DUCT STANDARDS. vent ductwork shall not be insulated.
12- all duct dimensions shown on plans are clear inside dimensions.
13- refrigerant piping shall be copper type L or K or ACR copper tubing with wrought copper fittings. joints shall be soldered with 95/5 solder and suittable flux.
14- insulate suction lines with 3/4" foamed plastic or closed cell polyethylene pre-molded pipe insulation.
15- provide accesory low volt room thermostats with fan-off-auto and cool-off-heat switches and heating subbase.
16- carefully coordinate location of ductwork with all structural elements providing duct sleeves as required.
17- control wiring shall be the responsibility of the mechanical contractor. cool-off-heat switches and heating subbase.

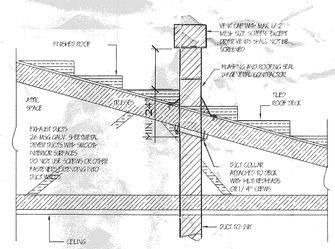

ROOF VENT DETAIL

N.T.S.

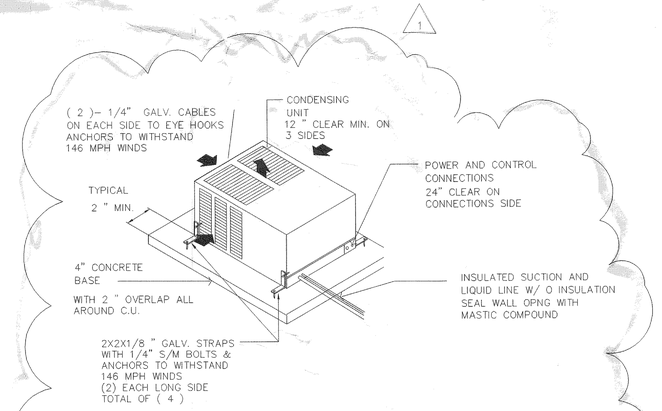

CONDENSING UNIT MOUNTING DETAIL

HVAC CHECKLIST

HVAC DESIGN REQUIRES

DUCT SMOKE DETECTORS	NO
FIRE DAMPERS	NO
SMOKE DAMPERS-	NO
FIRE RATED ENCLOSURE	NO
FIRE-RATED FLOOR /	NO
CEILING ASSEMBLY	NO
FIRE STOPPING-	NO
SMOKE CONTROL	NO

SPECIAL MECHANICAL NOTES

1- ALL EXHAUST DUCT SHALL BE CONSTRUCTED OF SHEETMETAL TERMINATE OUTSIDE THE BUILDING AND BE EQUIPPED WITH BACKDRAFT DAMPERS (NO T-FIN ALLOWED)

2- DUCTS FROM TOILETS ROOMS SHALL DISCHARGE TO THE OUTSIDE OF THE BUIDING, SHALL TERMINATE NO LESS THAN 6 INCHES ABOVE THE FINISHED ROOF SURFACE, AND SHALL BE SCREENED WITH A CORROSION RESISTANT MATERIAL OF MESH SIZE NO LIRGER THAN 1/2 INCH. PROVIDE GOOSENECK OR RAIN CAP ON ROOF TERMINATION

FEB 2 5 2005

JOB NUMBER 04-001-AA

orlando m. fortun
CONSULTING ENGINEERS P.A.
CIVIL / STRUCTURAL
P.E. 22249
TEL: (305) 362-4225 FAX: (305) 362-2014

PROPOSED ADDITION PLAN FOR:
MR. & MRS. MISHART TORRES
LOCATED AT:
1821 SW 87TH AVENUE MIAMI, FLORIDA.
PH: (305) 264 8098

DRAWN : AG	
CHECKED : O.M.F.	
DATE : 11.19.05	
SCALE : SHOWN	
JOB NO.: 04-001-AA	
SHEET	
AC-2	
OF 2 SHEETS	

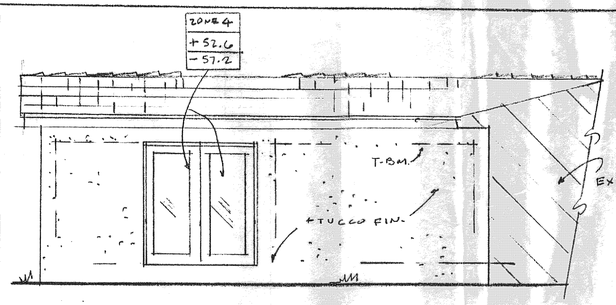

-LEFT SIDE ELEVATION-

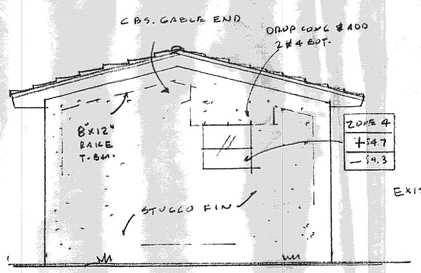

-REAR ELEVATION-

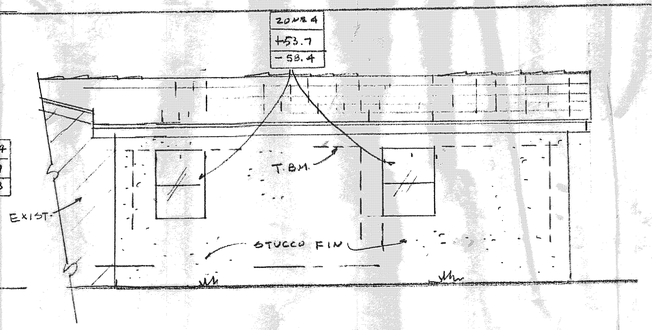

-RIGHT SIDE ELEVATION-

SCALE: 1/4" = 1'-0" (TYP.)

TERMITE PROTECTION

AS PER F.B.C. 2001

B1816.1 TERMITE PROTECTION. ALL BUILDINGS SHALL HAVE PRE-CONSTRUCTION TREATMENT PROTECTION AGAINST SUBTERRANEAN TERMITES. THE RULES AND LAWS AS ESTABLISHED BY THE FLORIDA DEPARTMENT OF AGRICULTURE AND CONSUMER SERVICES SHALL BE DEEMED AS APPROVED WITH RESPECT TO PRE-CONSTRUCTION SOIL TREATMENT FOR PROTECTION AGAINST SUBTERANEAN TERMITES. A CERTIFICATE OF COMPLIANCE SHALL BE ISSUED TO THE BUILDING DEPARTMENT BY THE LICENSED PEST CONTROL COMPANY THAT CONTAINS THE FOLLOWING STATEMENT:

"THE BUILDING HAS RECEIVED A COMPLETE TREATMENT FOR THE PREVENTION OF SUBTERRANEAN TERMITES. TREATMENT IS IN ACCORDANCE WITH RULES AND LAWS ESTABLISHED BY THE FLORIDA DEPARTAMENT OF AGRICULTURE AND CONSUMER SERVICES".

B1842.6 CERTIFICATE OF PROTECTIVE TREATMENT FOR PREVENTION OF TERMITES. A WEATHER RESISTANT JOBSITE POSTING BOARD SHALL BE PROVIDED TO RECEIVE DUPLICATE TREATMENT CERTIFICATES AS EACH REQUIRED PROTECTIVE TREATMENT IS COMPLETED, PROVIDING A COPY FOR THE PERSON THE PERMIT IS ISSUED TO AND ANOTHER COPY FOR THE BUILDING PERMIT FILES. THE TREATMENT CERTIFICATE SHALL PROVIDE THE PRODUCT USED, IDENTITY OF THE APPLICATOR TYPE AND DATE OF THE TREATMENT, SITE LOCATION, AREA TREATED, CHEMICAL USED, PERCENT CONCENTRATION AND NUMBER OF GALLONS USED, TO ESTABLISH A VERIFICABLE RECORD OF PROTECTIVE TREATMENT. IF THE SOIL CHEMICAL BARRIER METHOD FOR TERMITE PREVENTION IS USED, FINAL EXTERIOR TREATMENT SHALL BE COMPLETED PRIOR TO FINAL BUILDING APPROVAL.

B1842.7 NOTICE OF TERMITE PROTECTION. A PERMANENT SIGN WHICH IDENTIFIES THE TERMITE TREATMENT PROVIDER AND NEED FOR RE-INSPECTION AND TREATMENT CONTRACT RENEWAL SHALL BE PROVIDED. THE SIGN SHALL BE POSTED NEAR THE WATER HEATER OR ELECTRIC PANEL.

BATHS AND CLOSETS LOCKS NOTE

EVERY CLOSET DOOR LATCH SHALL BE SUCH THAT CHILDREN'S CAN OPEN THE DOOR FROM INSIDE THE CLOSET.
EVERY BATHROOM DOOR LOCK SHALL BE DESIGNED TO PERMIT THE OPENING OF THE LOCKED DOOR FROM THE OUTSIDE IN AN EMERGENCY.
NO DOOR IN ANY MEANS OF ESCAPE SHALL BE LOCKED AGAINST EGRESS WHEN THE BUILDING IS OCCUPIED.

EGRESS WINDOW NOTE:

AN OUTSIDE WINDOW OR DOOR OPERABLE FROM THE INSIDE WITHOUT THE USE OF TOOLS AND PROVIDING A CLEAR OPENING OF NOT LESS THAN 20" IN WIDTH, 24" IN HEIGHT AND 5.7'S IN AREA THE BOTTOM OF THE OPENING SHALL NOT BE MORE THAN 44" OFF THE FLOOR.

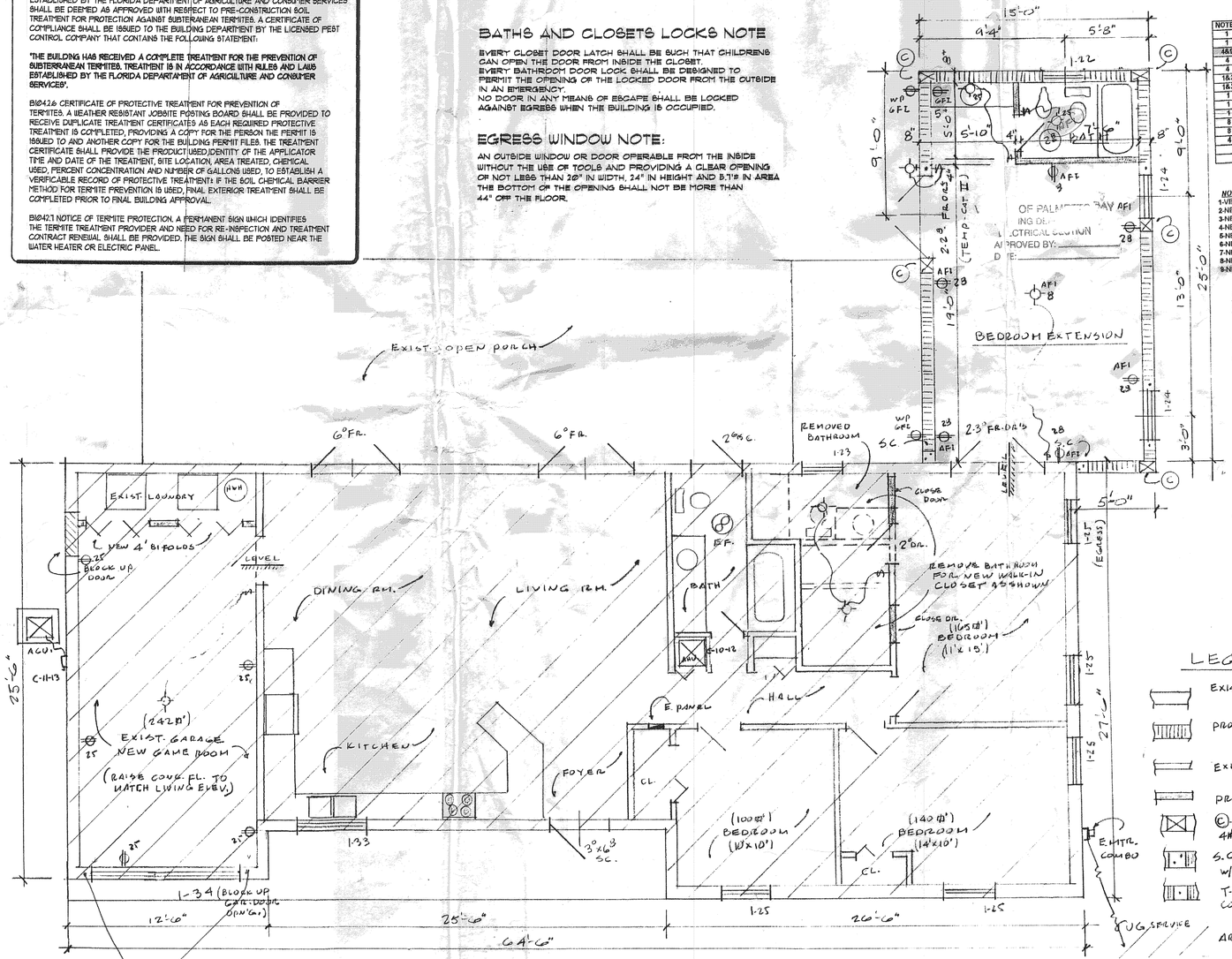

-FLOOR PLAN-

SCALE: 1/4" = 1'-0"

ELECTRICAL CONDITIONS

PANEL DESIGNATION: "A" EXISTING
"240/120 VOLTS 1 PHASE" "3" WIRE SOLID NEUTRAL
AMPERE BUS: "150" (90% CT.) AMPERE MAIN: "MLO" FEEDER: "3 #1 & #6 (EGC) THHN/THWN Cu. IN 1 1/2" C. NEC TABLE 310.15(A) 150 A.
AMPERE INT.CAP.: "10K" FED FROM: " METER COMBO"
LOCATION: "INSIDE"
MOUNTING: "FLUSH"

NOTES	CKT	KVA	DESCRIPTION	WIRE	COND	BRK	A	B	BRK	COND	WIRE	DESCRIPTION	KVA	CKT	NOTES
1	1	1.200	MICROWAVE	#12	1/2"	20	2.700		20	1/2"	#12	SMALL PPL.	1.500	2	5
1	3	1.500	REFRIGERATOR	#12	1/2"	20		2.505	20	1/2"	#12	SMALL PPL.	1.000	4	5
4&5	5	1.100	BATHROOM GFCI	#12	1/2"	20	2.500		20	1/2"	#12	LAUNDR CKT	1.500	6	5
4	7	1.100	GEN.LIGHTING	#14	1/2"	15		2.200	15	1/2"	#14	NEW GEN.LIGHTING(AFI)	1.100	8	4&12
4	9	1.100	GEN.LIGHTING	#14	1/2"	15	5.100		60D	3/4"	#6	A.H.	6.000	10	1,2&3
1&3	11	1.000	A/C CONDENSOR	#10	1/2"	30D		6.000	60D	3/4"	#6	A.H.	5.000	12	1,2&3
1&3	13	1.000	A/C CONDENSOR	#10	1/2"	30D	2.200		20	1/2"	#12	DISHWASHER	1.200	14	1
1	15	0.300	POOL LIGHT	#14	1/2	15		6.300	60D	3/4"	#6	RANE	6.000	16	7
1	17	1.440	POOL PUMP	#12	1/2"	20	7.440		60D	3/4"	#6	RANE	6.000	18	7
1	19	1.440	POOL PUMP	#12	1/2"	20		2.240	20	1/2"	#12	DISPOSAL	0.800	20	1
8	21	2.250	W.H.	#10	1/2"	30D	3.450		20	1/2"	#12	WASER	1.200	22	1
8	23	2.250	W.H.	#10	1/2"	30D		4.750	30D	1/2"	#10	DRYR	2.500	24	6
4	25	1.100	GEN.LIGHTING	#14	1/2"	15	3.600		30D	1/2"	#10	DRYR	2.500	26	6
	27	0.000	SPACE					1.100	15	1/2"	#14	NEW GEN.LIGHTING(AFCI)	1.100	28	4&12
	29	0.000	SPACE				0.000					SPZE	0.000	30	
		KVA	CONNECTED LOAD				53.160	28.890	28.090			DEMAND			
		KVA	DEMAND LOAD				33.503					FACTOR	0.60		
			DEMAND AMPERES				139.598					D-DOUBLE POLE BREAKER			

NOTES
1-VERIFY WIRING AND OVERCURRENT SIZE WITH NAME PLATE.
2-NEC 220.3 (100% OF THE NAMEPLATE RATING OF THE CENTRAL ELECTRIC SPACE HEATING).
3-NEC 220.21 NONCONCIDENT LOADS.
4-NEC TABLE 220.3(A)(WATTS PER SQ.FT.). 2253 SQ.FT X 3 WPERSQ.FT. = 6759 W DIVIDE BY 2 TS CKTS 5 1126.5 WATTS
5-NEC 210.11 (C) (1),(2) & 220.16 (SMALL APPLIANCES & LAUNDRY LOAD).
6-NEC 220.18 (DRYERS). 10-NEC 220.30 (B) (3).
7-NEC 220.19 (ELECTRIC RANGES). 11-ROMEX AND ENT ALLOWED.
8-NEC 220.32 (C) (3) (WATER HEATER). 12-NEC210.12 (B) AFCI BREAKERS IN DWELLIG UNIT BEDROOMS
9-NEC 210.11 (C) (3) (BATHROOM BRANCH CIRCUITS).

ELECTRICAL RISER DIAGRAM NTS.

MITCH TORRES
18321 SW 87 AVE
MIAMI, FL.

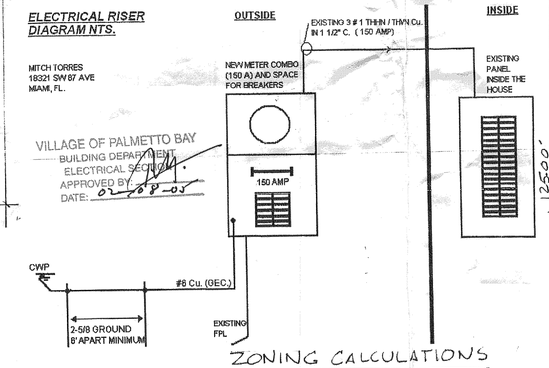

VILLAGE OF PALMETTO BAY
BUILDING DEPARTMENT
ELECTRICAL SECTION
APPROVED BY:
DATE: 02-08-05

ZONING CALCULATIONS

EXIST. RESIDENCE — 1666 ft²
PROPOSED ADDITION - 375 ft² (23%)
NEW TOTAL COVER - 2041 ft²

LEGEND

- EXIST. 8" CBS. WALLS
- PROPOSED 8" CBS. WALLS
- EXIST. 4" WD. FR. WALLS
- PROP. 4" WD FR. WALLS
- © 8"x12" CONC COL. 4#5 VERT. #3 TIES 12" O/C
- S.C. - 8"x8" CONC COL. w/ 2#5 VERT.
- T. DOW. 1#5 VERT. IN CONC. FILLED BLOCK CELL
- AREA OF EXIST RESIDENCE

VILLAGE OF PALMETTO BAY
BUILDING DEPARTMENT
BUILDING SECTION
APPROVED BY:
DATE: 9/1/05

FLOOD LEGEND

Additions, Remodeling, Repairs & Combination

FOLIO: _____ ADDRESS: 18321 SW. 87 AVE MIAMI
LOT/UNIT: 4 BLOCK/BLDG: 05
SUBDIVISION: BEL-AIR SEC 22 PLAT BOOK: 96 PAGE: 5

COST OF CONSTRUCTION - SCOPE OF WORK
INTERIOR RENOVATION - COST OF WORK (LIST INCLUDE ITEMIZED LIST): $_____
ADDITION - COST OF WORK - _____ SQ.FT. OF CONST. X (47 SQ.FT. LIVING SPACE): $_____
_____ SQ.FT. OF CONST. X (35 SQ.FT. STORAGE, GARAGE, TERRACE): $_____
TOTAL COST OF WORK: $_____

	Lowest Floor Elev/including basement/Harbor Areas)	Garage/ Storage Floor Elevation	Adjacent Grade Elevation (feet to the nail of the structure)
EXISTING	11.04	(N/A)	9.3
PROPOSED	FT. NGVD	FT. NGVD	FT. NGVD

THE OWNER OF THIS PROPERTY UNDERSTANDS THAT THE WORK AMOUNT INDICATED ABOVE IS GOING TO BE KEPT ON THE OFFICIAL PERMIT RECORD DURING A SIX (6) MONTH PERIOD FROM THE DATE OF WHICH THE CERTIFICATE OF COMPLETION IS ISSUED. IF ANY ADDITIONAL REPAIR, RECONSTRUCTION, ALTERATION, ADDITION, REMODELING OR COMBINATION THEREOF IS DONE BEFORE THE CERTIFICATE OF COMPLETION IS ISSUED, OR WITHIN THE TRACKING PERIOD, IT WILL BE CONSIDERED A CONTINUANCE OF THE ABOVE WORK. IF THE PROPERTY IS DECLARED SUBSTANTIALLY IMPROVED OR DAMAGED AND THE FLOOR ELEVATION IS NOT IN COMPLIANCE, THE STRUCTURE WILL BE ELEVATED IN ACCORDANCE WITH CHAPTER 116 OF THE MIAMI-DADE COUNTY CODE.

0' - 0" = NGVD

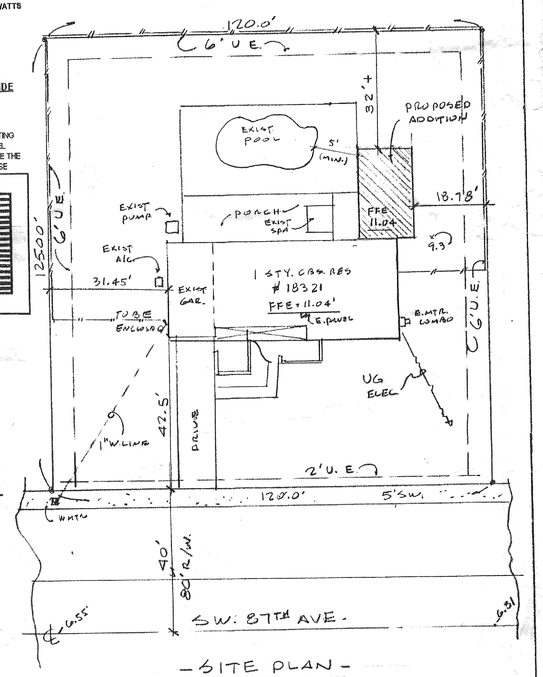

-SITE PLAN-

SCALE: 1" = 20'

LEGAL:

LOT-4, BLK- 05:
BEL-AIRE SEC. 22,
PB- 96- P-5;
DADE CO-

orlando m. torres
CONSULTING ENGINEERS, P.A.
CIVIL / STRUCTURAL
FE: 22149
1320 S.W. 39th TERRACE MIAMI, FLORIDA 33185
TEL.- (305) 261-6225 FAX- (305) 261-3214

JAN 28 2005

JOB NUMBER 04-001-AA

P & H. ADDITIONS INC.
3100 NW. 72ND AVE. UNIT-129 (305) 264-8092

ADDITION TO RESIDENCE
FOR: MR. & MRS. MISHART TORRES
AT: 18321 SW. 87TH AVE. MIAMI, FL

11-17-04 | # 8371 | 1/

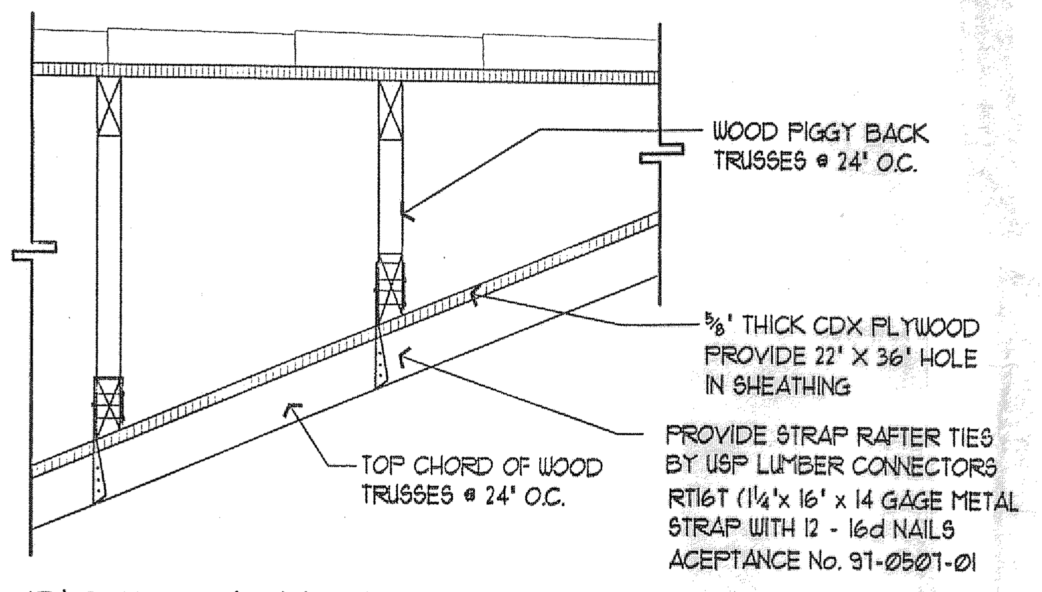

PIGGY BACK DETAIL

SCALE - ¾" = 1'-0"

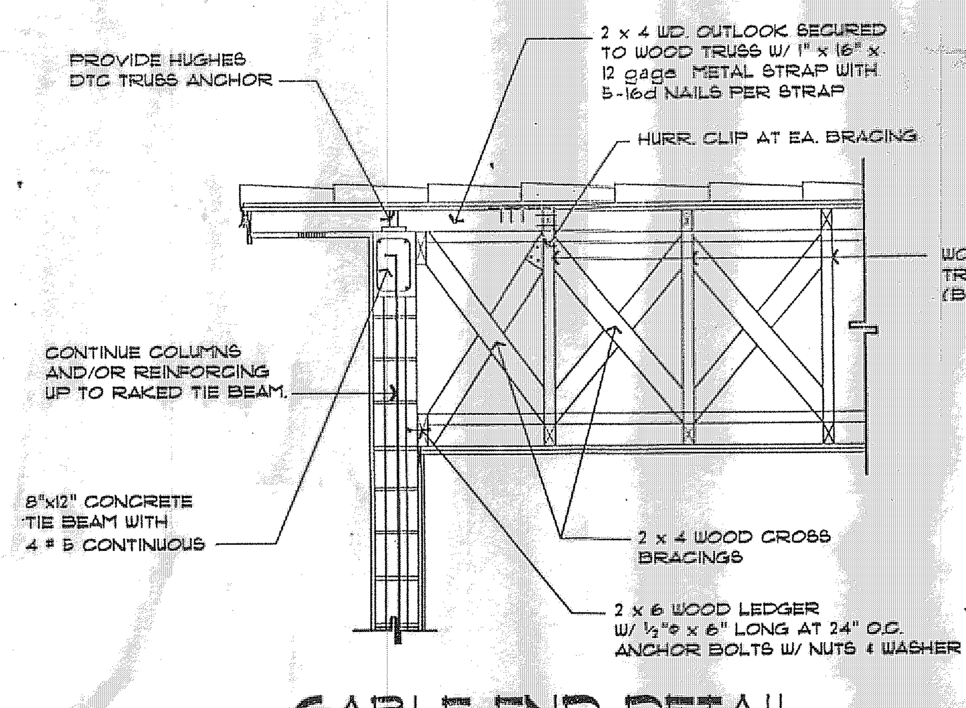

GABLE END DETAIL

SCALE: ½" = 1'-0"

SPECIAL NOTES:

1. UNDERGROUND WASTE LINES:
   a. MINIMUM SIZE OF LINES: 2" @ 1/4 " / FT. GRADE.
   b. LINES 3" & ABOVE: @ 1/8 "/FT. GRADE.
   c. BUILDING DRAIN SHALL HAVE A UNIFORM SLOPE OF 1/8 "/FT.
2. SLOPE OF HORIZONTAL PIPING:
   a. HORIZONTAL DRAINAGE PIPING 2" & SMALLER: @ 1/4 "/FT. GRADE
   b. HORIZONTAL DRAINAGE PIPING 3" & LARGER: @ 1/8 "/FT. GRADE
3. FURNISH ANTI-SCALD VALVES FOR BATHTUBS AND SHOWERS.
4. FURNISH VACUUM BREAKERS FOR HOSE BIBBS.

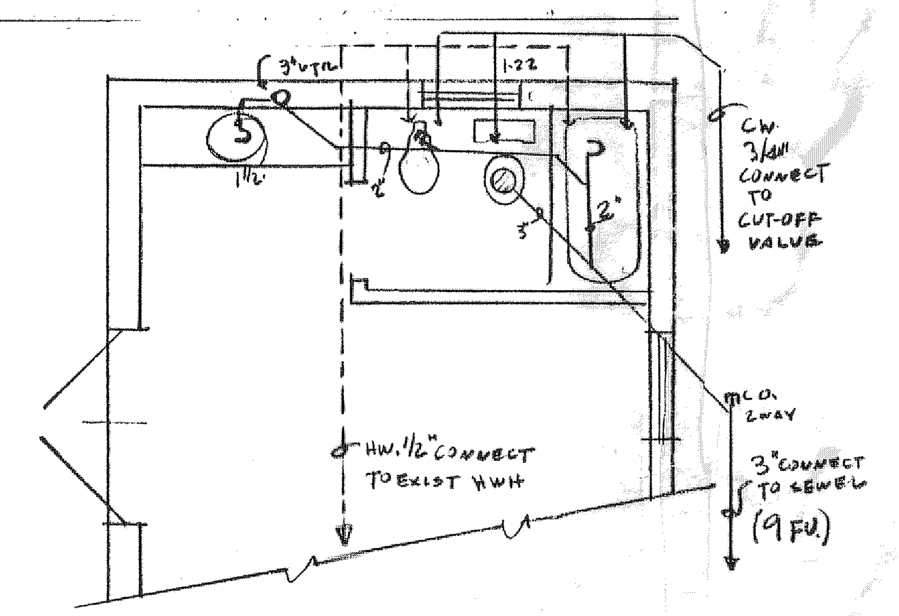

—— C.W. - 3/4"
– – – HW. - 1/2"

- PLUMBING FLOOR PLAN -

SCALE: 1/4" = 1'-0"

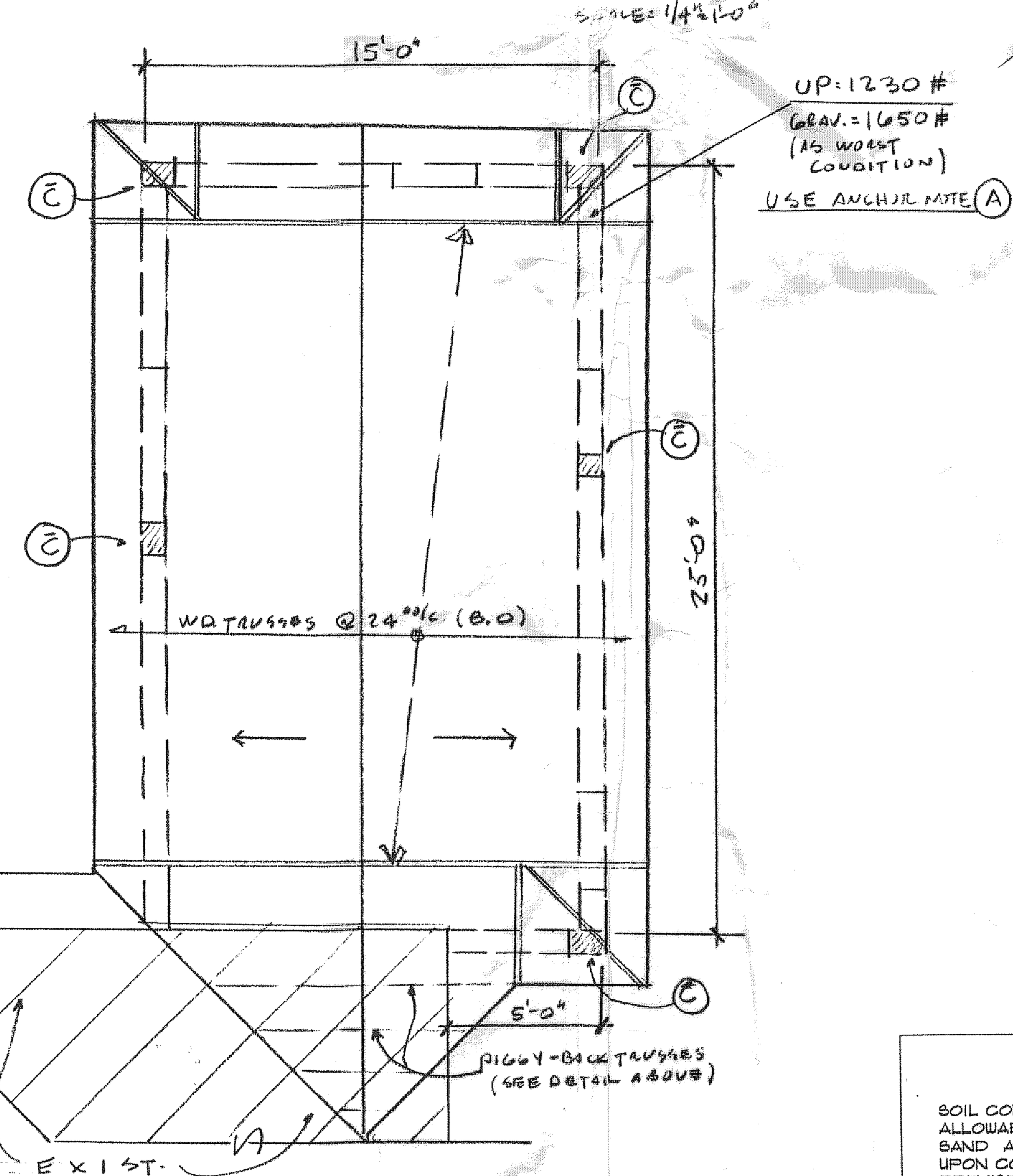

- ROOF FRAMING PLAN -

SCALE: 1/4" = 1'-0"

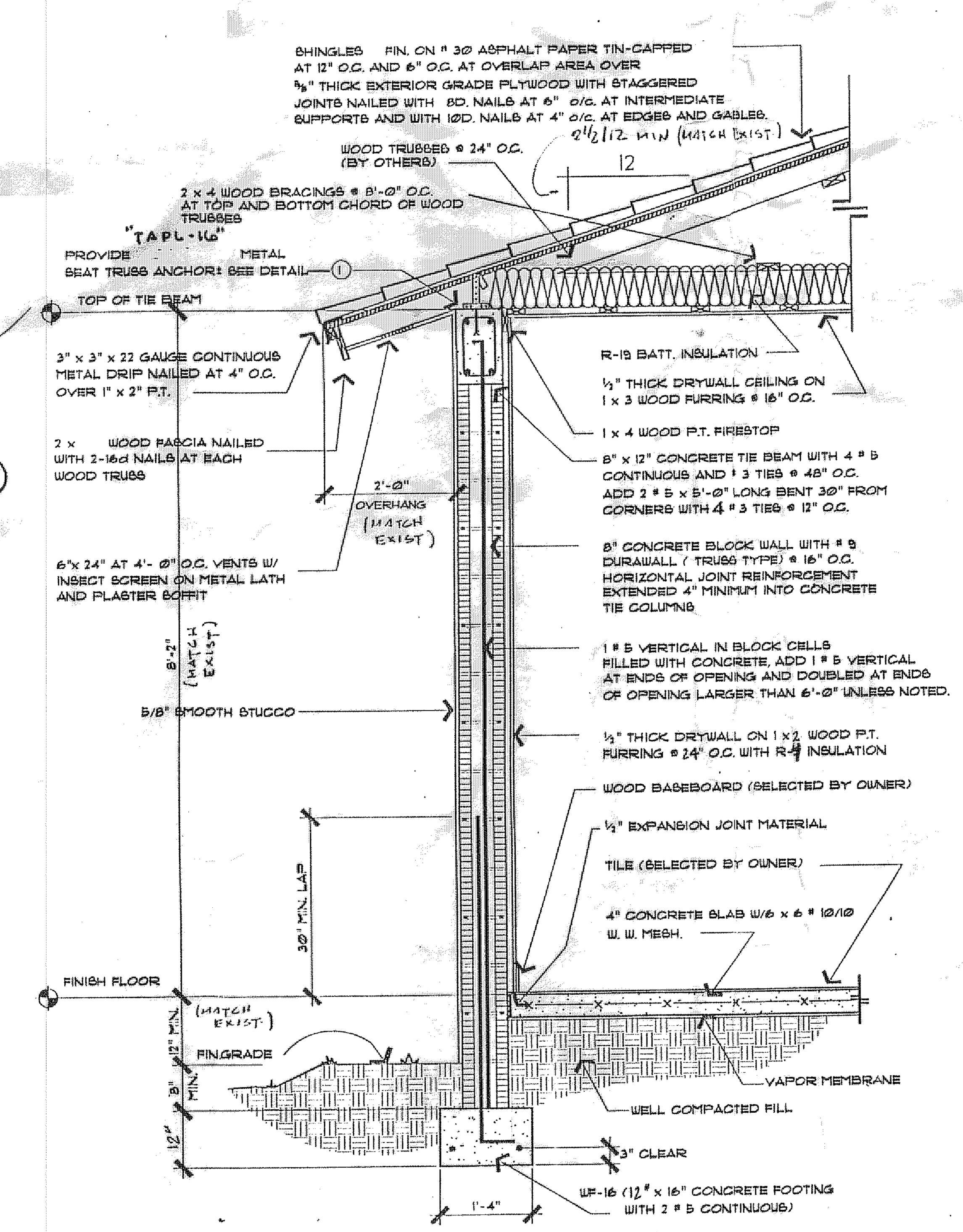

TYPICAL WALL SECTION

SCALE- ¾" = 1'-0"

SOIL STATEMENT

SOIL CONDITION AT SITE BY VISUAL INSPECTION INDICATES AN ALLOWABLE BEARING CAPACITY OF 2000 P.S.F. (UNDISTURBED SAND AND/OR ROCK)
UPON COMPLETION OF EXCAVATION WE WILL VISUALLY INSPECT THE PREMISES TO SUBMIT A LETTER CERTIFYING THAT TO THE BEST OF OUR KNOWLEDGE, BELIEF AND PROFESSIONAL JUDGMENT THE CONDITIONS ENCOUNTERED ARE SIMILAR TO THOSE DESCRIBED ABOVE, AND THAT THE BOTTOM OF THE FOUNDATIONS TRENCHES HAS BEEN PROPERLY HAND TAMPERED TO OUR SATISFACTION.

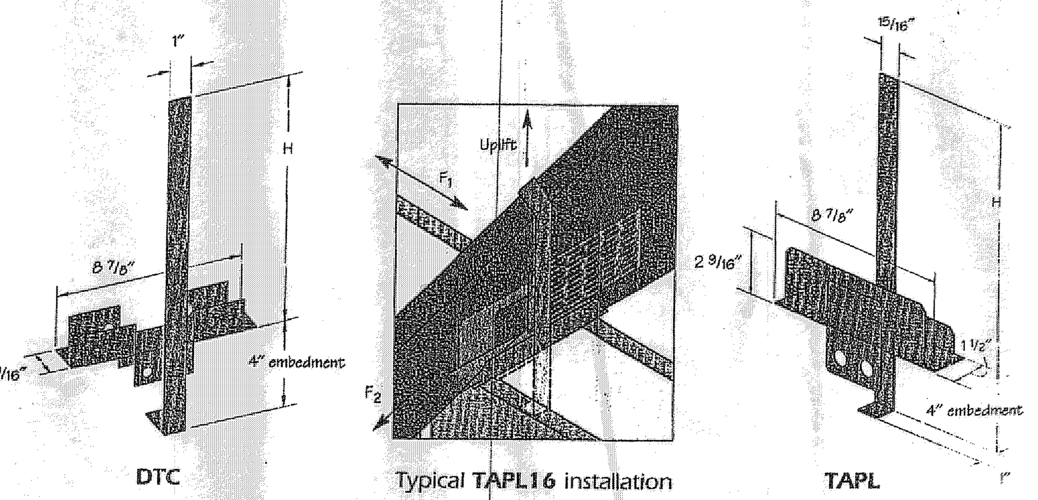

DETAIL (1)

USP Stock No.	Ref. No.	Steel Gauge	Dimensions: Out of Concrete H	Fastener Schedule[2,3]: Seat Plate	Fastener Schedule[2,3]: Truss/ Rafter	Allowable Loads (Lbs.)[1] DF-L / SYP: F1 133%	DF-L / SYP: F2 133%	DF-L / SYP: Uplift 133%	DF-L / SYP: Uplift 160%	S-P-F: F1 133%	S-P-F: F2 133%	S-P-F: Uplift 133%	S-P-F: Uplift 160%
TAPL12	HETAL16	14	12	(6) 10d x 1-1/2	(11) 10d	595	880	1350	1350	595	880	1350	1350
TAPL14	-- --	14	14	(6) 10d x 1-1/2	(13) 10d	595	880	1350	1350	595	880	1350	1350
TAPL16	HETAL20	14	16	(6) 10d x 1-1/2	(13) 10d	595	880	1350	1350	595	880	1350	1350
DTC	HETAL12	14	12-3/4	(4) 10d x 1-1/2	(9) 10d	650	980	1105	1330	420	635	720	865

1) Allowable loads have been increased 33-1/3% or 60% for wind and seismic loads; no further increase shall be permitted.
2) Minimum nail penetration shall be 1-3/4" for 10d nails.

"TAPL-16" TRUSS ANCHOR

TRUSS ANCHORS PRODUCT APPROVAL NUMBERS: "U.S.P. MANUFACTURER INC." TAPL-16 (N.O.A. 02-0102.03 EXP. JAN.11,07)

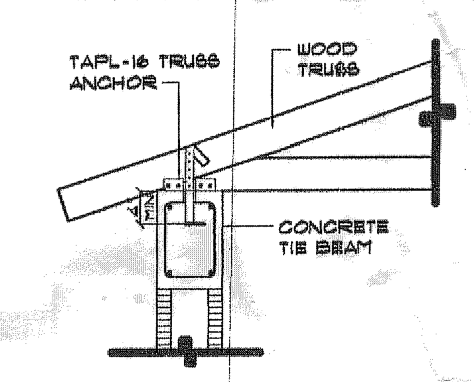

TRUSSES TO BE ANCHORED TO CONCRETE TIE BEAM AS FOLLOWS:

(A) - USE TAPL-16 WITH 13-10d NAILS X 1-1/2" LONG TO TRUSS AND 6-10d NAILS AT SEAT FOR TRUSSES WITH UPLIFTS UP TO 1,350 LBS.

(A') - UPLIFTS UP TO 2,300 # USE STRAP (A) WITH ADDITIONAL "U.S.P." TA-16 TRUSS ANCHOR (1" X 16" X 14 GAUGE) EMBEDDED 4" IN CONCRETE W/ 9-10d NAILS IN TRUSS.

(A'') - UPLIFTS UP TO 2,700# USE 2-PLY GIRDERS WITH 2-TAPL-16 (ONE EACH SIDE OF GIRDERS) W/ SAME NAILING PATTERN DESCRIBED IN A.

UPLIFTS LARGER THAN 2,700# USE DETAILS -- (B)-(B')-(C)-(D)

(B) - FOR TRUSSES WITH UPLIFT UP TO 6,000#.

(B') - FOR TRUSSES WITH UPLIFT UP TO 8,000#.

(C) - FOR GIRDERS WITH UPLIFT UP TO 16,280#.

(D) - FOR GIRDERS WITH UPLIFT UP TO 24,000#.

ROOF LOADS:

USING ANSI-ASCE 7-98 FLA. BLDG. CODE LATEST EDITION

ASSUME EXPOSURE C
BUILDING CATEGORY I

1. DEAD LOADS (P.S.F.)
   - 1.1 TRUSSES/RAFTERS = 5
   - 1.2 ROOFING = 10
   - 1.3 CEILING = 10
   - TOTAL DEAD LOADS = 25 P.S.F.
   - TOTAL LIVE LOADS = 30 P.S.F.
   - W = 55 P.S.F.
2. WIND LOADS (P.S.F.) — EQ. TABLES (PARAGRAPH) (PAGE)
   - q h = 0.00256 x Kz x I x (V) 2 — EQ. 6.1 (6.5.1) (17)
   - Kz = .85 Kh = .85 — TABLE 6.3 (6.5.2) (17)
   - V = 146 M.P.H — FIG. 6.1 (15)
   - I = 1.15 — TABLE 6.2 (6.5.2) (17)
   - qzh = 0.00256 x (146) 2 x (1.15) x Kz, h
   - qz = 62.75 x .85 (Kz) = 53 P.S.F
   - qh = 62.75 x .85 (Kh) = 53 P.S.F
3. FACTORED WIND LOADS (P.S.F.)
   - q ROOF = qh x (G x Cpl G C pl) EQ.TABLE 6.1 (16)
   - 3.1 = FIND. h/L. Ø TO DETERMINE Cp
   - h/L = 13/15 =
   - ANGLE φ = ARCTAN (3/12) = 12° Cp = (.70) FIG. 6.3 (PAGE 21)
   - 3.2 = FIND GUST. FACTOR
   - G = 0.85 (EXPOSURE C,D φ 6.61 (PAGE 34)
   - 3.3 = FIND INTERNAL PRESSURE COEFF. GCpl = 18 TABLE 6.4 (PAGE 31)
   - q ROOF = 53 x (0.85 x .70 + 18) = 41
   - UPLIFT qh G x Cp GCpl

   q ROOF = 41 P.S.F.
4. TOTAL NET UPLIFT LOADS (P.S.F.)
   - U = qROOF - D.L. = -10 = P.S.F
   - qROOF 1.1 ABOVE

   U = 31 P.S.F (BUT USE MIN.) = 41 P.S.F
5. TOTAL GRAVITY LOADS (P.S.F.)
   - G = qROOF - D.L. = 30 + 25 = 55 P.S.F
   - qROOF 1.1 ABOVE (L.L.)

   G = 55 P.S.F

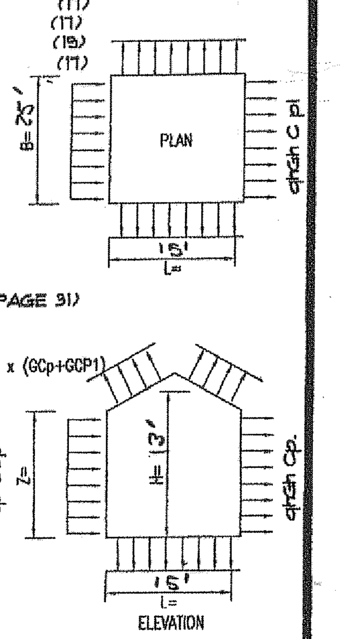

GENERAL & STRUCTURAL NOTES

1. GENERAL
   COORDINATE STRUCTURAL DRAWINGS WITH ARCHITECTURAL, MECHANICAL AND ELECTRICAL DRAWINGS. VERIFY ALL DIMENSIONS, LOCATE DEPRESSED SLABS SLOPES DRAINS, OUTLETS, RECESSES BOLT SETTING SLEEVES, INSERTS, ETC. ALL STRUCT. OPENINGS AROUND OR AFFECTED BY MECHANICAL, ELECTRICAL AND PLUMBING EQUIPMENT SHALL BE VERIFIED WITH EQUIPMENT PURCHASED BEFORE PRECEEDING WITH STRUCTURAL WORK AFFECTED ANY DISCREPANCIES NOTIFY ARCHITECT OR ENGINEER SHALL COMPLY WITH THE LATEST REQUIREMENTS AND ALL LOCAL CODES GOVERNING THE INSTALLATION, SEE PLANS FOR ADDITIONAL NOTES.
2. ALLOWABLE SOIL BEARING PRESSURE:
   FOOTING SIZES AND REINFORCEMENT HAVE BEEN DESIGNED FOR AN ALLOWABLE SOIL BEARING PRESSURE OF 2000 P.S.F. ALL FOOTINGS SHALL BE CARRIED TO UNDISTURBED MEDIUM SAND OR ROCK AND TO AT LEAST THE DEPTH SHOWN ON THE DRAWINGS.
3. CONCRETE NOTE:
   ALL CONCRETE TO ATTAIN A MINIMUM COMPRESSIVE STRENGTH OF 3000 P.S.I. IN 28 DAYS. AGGREGATES TO BE CLEAN AND WELL GRADED. MAXIMIZE SIZE 1" CONCRETE SLUMP 3" MINIMUM TO 5" MAXIMUM. SLABS ON GRADE TO BE 2600 P.S.F. IN 28 DAYS.
4. CONCRETE COVER AS FOLLOWS:

	BOTTOM	TOP	SIDES
GRADE BEAM/FOOTING	3"	2"	2"
BEAM	1 1/2"	1 1/2"	1 1/2"
COLUMNS	-	-	1 1/2"
SLABS	1"	1"	1"

5. REINFORCING STEEL:
   TO BE NEW HIGH STRENGTH BILLET STEEL DEFORMED AS PER ASTM A-305 AND CONFORMING TO AST A-615, GRADE 60. LAP CONTINUOUS BAR 30 BAR DIAMETERS, HOOK DISCONTINUOUS END OF ALL TOP BARS.
6. CONCRETE BLOCK WALLS:
   AS SHOWN IN STRUCTURAL DRAWINGS TO BE ERECTED BEFORE PLACING CONCRETE IN ADJACENT BEAMS AND COLUMNS. PROVIDE HORIZONTAL JOINT REINFORCING @ EVERY 2ND COURSE (16" VERTICAL) FOR ALL EXTERIOR WALLS USE STANDARD NO. 8 TRUSS TYPE MASONRY REINFORCING AND EXTEND 4" INTO TIE COLUMNS OR INTO STRUCTURAL COLUMNS WITH APPROVED METHODS: AND USE NO. 8 LADDER TYPE REINFORCING FOR REINFORCED MASONRY CONSTRUCTION.
7. WOOD TRUSSES:
   TO BE MANUFACTURED AND INSTALLED IN ACCORDANCE WITH THE SOUTH FLORIDA BUILDING CODE. SHOP DRAWINGS TO BE SUBMITTED FOR APPROVAL PRIOR TO FABRICATION. DESIGN LIVE LOAD 30 PSF AND DEAD LOAD 21 PSF. PLYWOOD SHEATHING SHALL HAVE STAGGERED JOINTS AND SHALL BE NAILED WITH 8d COMMON NAILS NOT LESS THAN TWO IN 6"BD. OR THREE IN EACH 6" BD. AT EACH SUPPORT. NAILS SPACING WHALL BE 4" C/C AT PANEL EDGES AND 6" C/C @ INTERMEDIATE SUPPORTS. PROVIDE A 1"X4" WD. MEMBERS NAILED TO THE UPPERSIDE OF THE LOWER CHORD AT PANEL SPACED @ 8'-0" C/C AT WOOD TRUSSES.
8. SLABS ON FILL:
   FILL AND BACK FILL TO BE COMPACTED TO 95% OF THE MAXIMUM DENSITY AT OPTIMUM MOISTURE AS DETERMINED BY THE STANDARD PROCTOR TEST. COMPACTION LAYERS TO EXCEED 8" SLAB ON FILL TO BE PLACED ON A CHECKERBOARD PATTERN WITH POURS LIMITED TO 600 SF. OR 25 FT. IN ANY DIRECTION. WAIT 24 HRS. BETWEEN POURS.
9. ALL WOOD:
   ALL WOOD IN CONTACT WITH MASONRY SHALL BE PRESSURE TREATED. ALL WOOD SOUTHERN PINE # 2, 19 % MAX. MOISTURE WITH Fb=1250 PSI, E=1'500,000 PSI.
10. CONTRACTOR:
   CONTRACTOR SHALL PROVIDE ALL NECESSARY SHOP DRAWINGS FOR APPROVAL AS REQUIRED. ANY DISCREPANCIES ON THE DRAWINGS SHALL BE TO THE ATTENTION OF THE ARCHITECT OR ENGINEER BEFORE PRODCEEDING WITH THE WORK. ALL ELECTRICAL AND PLUMBING WORK SHALL BE DONE ACCORDING TO S.F.B.C. OR ANY LOCAL OR STATE CODES COVERING THE INSTALLATION.

GABLE END PIGGY BACKS ROOF CALC'S. ANCHOR DET. TYP. SEC. GEN. NOTES PLUMBING NOTE

2PM

VILLAGE OF PALMETTO BAY
BUILDING DEPARTMENT
BUILDING SECTION
APPROVED BY:
DATE:
JAN 26 2005

orlando m. fortun
CONSULTING ENGINEERS, P.A.
CIVIL / STRUCTURAL
P.E. 22245
7240 SW 39th TERRACE MIAMI, FLORIDA 33155
TEL- (305) 262-6225 FAX- (305) 262-2014

JOB NUMBER 04-001-AA

P & H. ADDITIONS INC.
3100 NW. 72nd AVE UNIT # 129 (305) 264-8042

ADDITION TO RESIDENCE
FOR: MR. & MRS. MISHART TORRES
AT: 18321 SW 87th AVE MIAMI, FL.

11-17-04 | # 8371 | 2/2

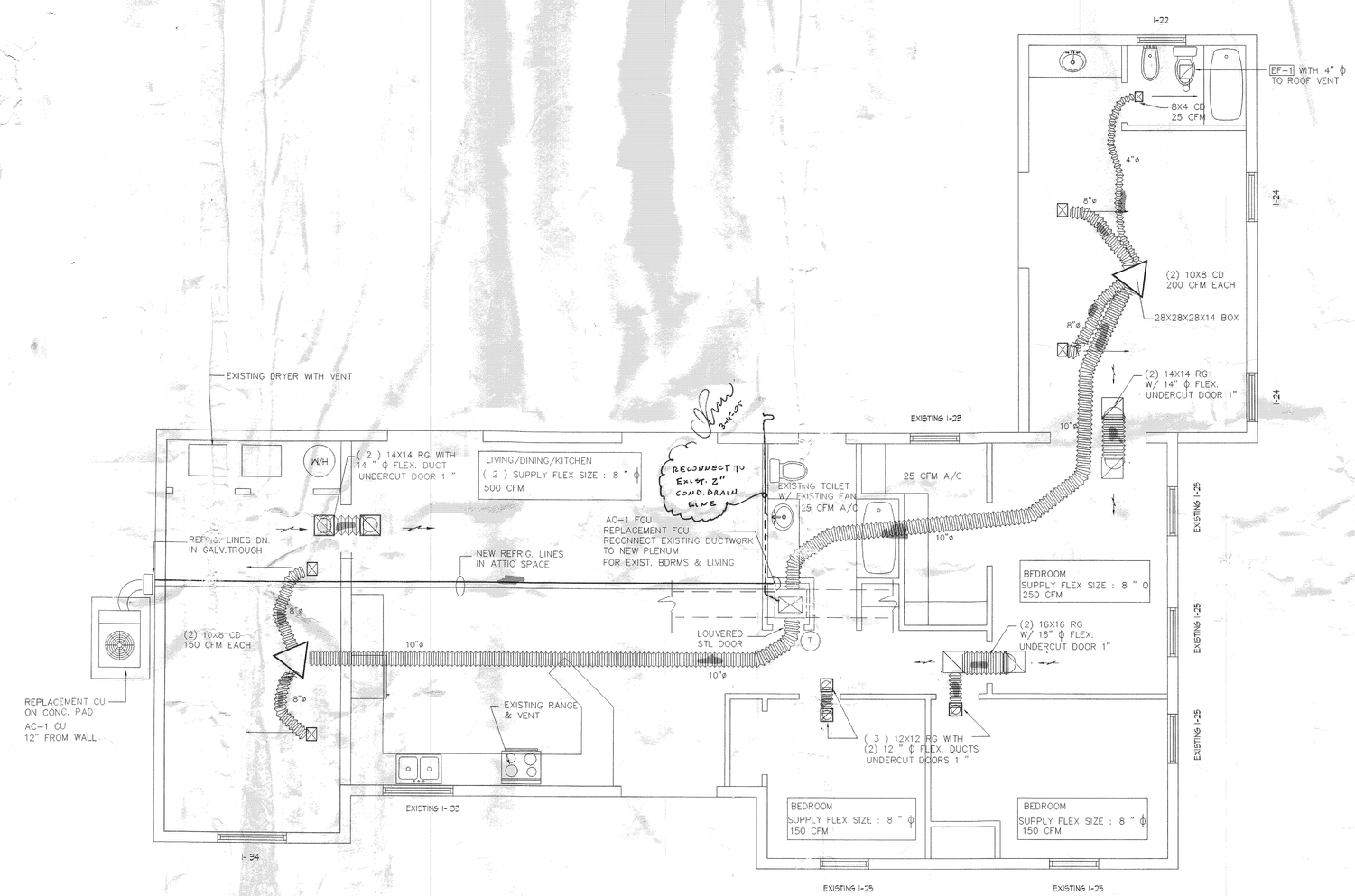

HVAC FLOOR PLAN

SCALE: 1" = 1'-0"

NORTH

REVISIONS	BY

JOB NUMBER 04-001-AA

orlando m. fortun
CONSULTING ENGINEERS, P.A.
CIVIL / STRUCTURAL
P.E. 22249
7220 S.W. 84th TERR. MIAMI, FLORIDA 33155
TEL- (305) 262-6225 FAX- (305) 262-2014

PROPOSED ADDITION PLAN FOR:

MR. & MRS. MISHART TORRES

LOCATED AT:
18321 SW 87TH AVENUE, MIAMI, FLORIDA. PH- (305) 264.8092

DRAWN : AG
CHECKED : O.M.F.
DATE : 11.19.05
SCALE : SHOWN
JOB NO.: 04-001-AA

SHEET
AC-1
OF 2 SHEETS

JAN 26 2005

AC SPLIT UNIT SCHEDULE

CONDENSING UNIT	MARK	AC-1 CU	
	SENSIBLE CAPACITY, BTUH	41100	
	TOTAL CAPACITY, BTUH	60000	
	COMPRESSOR, QUANTITY/FLA. EA.	1/23	
	CONDENSER FAN, FLA EA.	3	
	VOLTAGE/PHASE	240-1-60	
	DESIGN SELECTION MODEL TRANE	TTY060B100A	
	UNIT WEIGHT, LBS	349	
FANCOIL UNIT	MARK	AC-1 FCU	
	SUPPLY AIR VOLUME, CFM	1800	
	FRESH AIR VOLUME, CFM	-	
	EXTERNAL STATIC PRESSURE, INCH W.G.	.40	
	ELECTRIC HEATER, KW	10	
	MOTOR, HP	3/4	
	VOLTAGE/PHASE	240-1-60	
	DESIGN SELECTION MODEL TRANE	TWE060P013FB	
SYSTEM	SEER	12.40	
	REFRIGERANT LINES SUCTION/LIQUID	1-1/8" / 3/8"	
	NOMINAL SIZE (TONS)	5	
	AREA SERVED:	WHOLE HOUSE	

NOTE : PROVIDE ROOM THERMOSTATS- LOW VOLT.

FAN SCHEDULE

MARK	TYPE	CFM	ESP IWG	RPM	DRIVE	WATTS	VOLTAGE	MANUFACTURER	MODEL	CONTROL	AREA SERVED
EF-1	CEILING	50	1/8	1700	DIRECT	50	120-1-60	PENN	Z1	LIGHT-SWITCH	TOILETS

NOTE : FANS WITH INTEGRAL BACKDRAFT DAMPER.

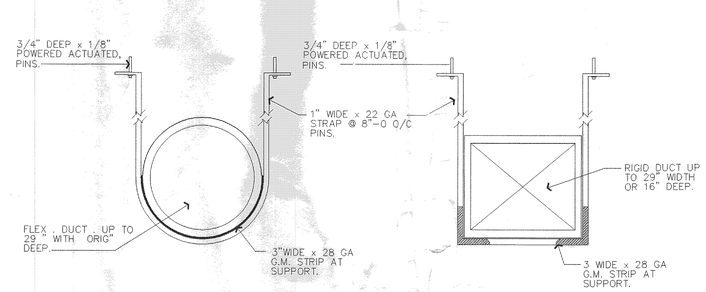

DUCT SUPPORT DETAILS

NTS

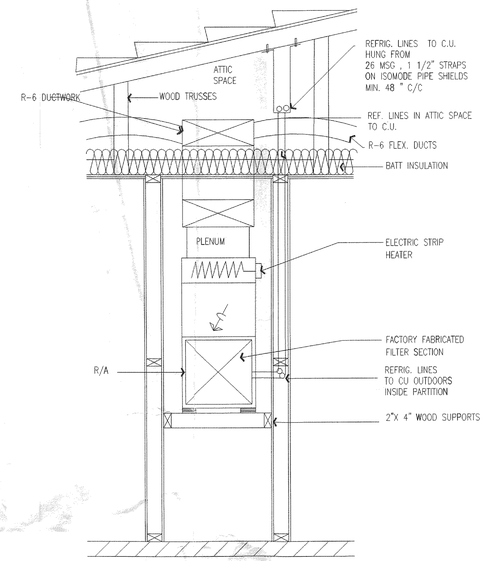

A/C EQUIPMENT CLOSET DETAIL

NTS

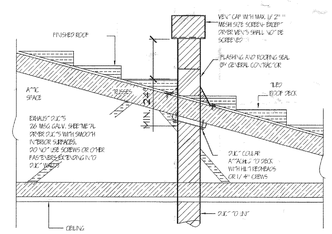

ROOF VENT DETAIL

N.T.S.

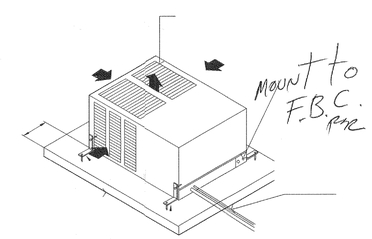

CONDENSING UNIT MOUNTING DETAIL

GENERAL NOTES-HVAC

01- all work shall conform to the latest edition of the florida building code and applicable state and local ordinances.
02- contractor shall warrant all work to be free of defects in workmanship and materials for a period of one year after acceptance of project.
03- provide all the necessary instructions to the owner, including all required printed materials, in the operation of the machanical systems.
04- provide equipment maintenance and instruction manuals,etc. to the owner submit architect/engineer for approval.
05- submit equipment, accesories, controls, ductwork, etc. shop drawings before proceeding with the purchase or installation of same.
06- provide all the necessary access panels to valves, fire dampers, etc as may be required.
07- balance all air systems to within 10% of quantities shown on plans.
08- all work must be coordinated with all other trades prior to execution of same.
09- a/c contractor must obtain his own permit and pay for all required fees.
10- conditioned ductwork shall be as follow: class I fiberboard, coated internally, R-6 value to SMACNA'S fiberglass duct manual. and applicable state and local ordinances.
11- ventilation ductwork shall be galv. sheetmetal per SMACNA'S LOW PRESSURE METAL DUCT STANDARDS. vent ductwork shall not be insulated.
12- all duct dimensions shown on plans are clear inside dimensions.
13- refrigerant piping shall be copper type L or K or ACR copper tubing with wrought copper fittings. joints shall be soldered with 95/5 solder and suittable flux.
14- insulate suction lines with 3/4" foamed plastic or closed cell polyethylene pre-molded pipe insulation.
15- provide accesory low volt room thermostats with fan-off-auto and cool-off-heat switches and heating subbase.
16- carefully coordinate location of ductwork with all structural elements providing duct sleeves as required.
17- control wiring shall be the responsibility of the machanical contractor. cool-off-heat switches and heating subbase.

HVAC CHECKLIST

HVAC DESIGN REQUIRES

DUCT SMOKE DETECTORS	NO
FIRE DAMPERS	NO
SMOKE DAMPERS-	NO
FIRE RATED ENCLOSURE	NO
FIRE-RATED FLOOR /	NO
CEILING ASSEMBLY	NO
FIRE STOPPING-	NO
SMOKE CONTROL	NO

SPECIAL MECHANICAL NOTES

1- ALL EXHAUST DUCT SHALL BE CONSTRUCTED OF SHEETMETAL TERMINATE OUTSIDE THE BUILDING AND BE EQUIPPED WITH BACKDRAFT DAMPERS (NO T-FIN ALLOWED)

2- DUCTS FROM TOILETS ROOMS SHALL DISCHARGE TO THE OUTSIDE OF THE BULDING, SHALL TERMINATE NO LESS THAN 6 INCHES ABOVE THE FINISHED ROOF SURFACE, AND SHALL BE SCREENED WITH A CORROSION RESISTANT MATERIAL OF MESH SIZE NO LARGER THAN 1/2 INCH. PROVIDE GOOSENECK OR RAIN CAP ON ROOF TERMINATION

REVISIONS	BY

JOB NUMBER: 04-001-AA

orlando m. fortun
CONSULTING ENGINEERS, P.A.
CIVIL / STRUCTURAL
REG. NO. 22244
7220 SW 59th TERR. MIAMI, FLORIDA 33155
TEL: (305) 264-4425 FAX: (305) 262-3014

PROPOSED ADDITION PLAN FOR:
MR. & MRS. MISHART TORRES

LOCATED AT:
18321 SW 87TH AVENUE/MIAMI, FLORIDA.

PH- (305) 264.8092

DRAWN : AG
CHECKED : O.M.F.
DATE : 11.19.05
SCALE : SHOWN
JOB NO.: 04-001-AA

SHEET
AC-2
OF 2 SHEETS

JAN 26 2006

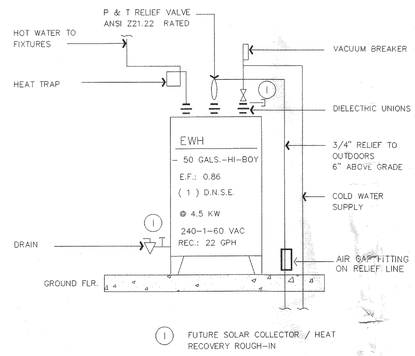

EWH DETAIL

NTS

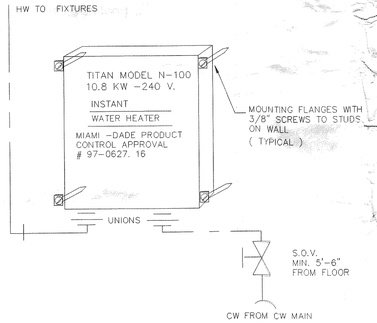

INSTANT WATER HEATER DETAIL

N.T.S.

FIXTURE CONNECTION SCHEDULE

SYMB	FIXTURE	COLD WATER	HOT WATER	P-TRAP
WC	WATER CLOSET	1/2"	–	3"
L.	LAVATORY	1/2"	1/2"	1 1/2"
B	BIDET	1/2"	1/2"	2"
BT	BATHTUB	1/2"	1/2"	2"
HB	HOSE BIBB	1/2"	–	–

FURNISH ANTI-SCALD VALVES FOR BATHTUBS AND SHOWERS.

SLOPE OF WASTE LINES

1- UNDERGROUND WASTE LINES :
- A- MINIMUM SIZE : 2 " @ 1/4 " FT/ SLOPE
- B- LINES 3 " AND ABOVE @ 1/8 " /FT. SLOPE
- C- BUILDING DRAIN SHALL HAVE A UNIFORM SLOPE OF 1/8 " /FT.

2-HORIZONTAL WASTE LINES , ABOVE GROUND :
- A- 2 " & SMALLER @ 1/4 " /FT SLOPE
- B -3 " & ABOVE @ 1/8"/FT. SLOPE.

3-FURNISH ANTI-SCALD VALVES FOR BATHTUBS AND SHOWERS

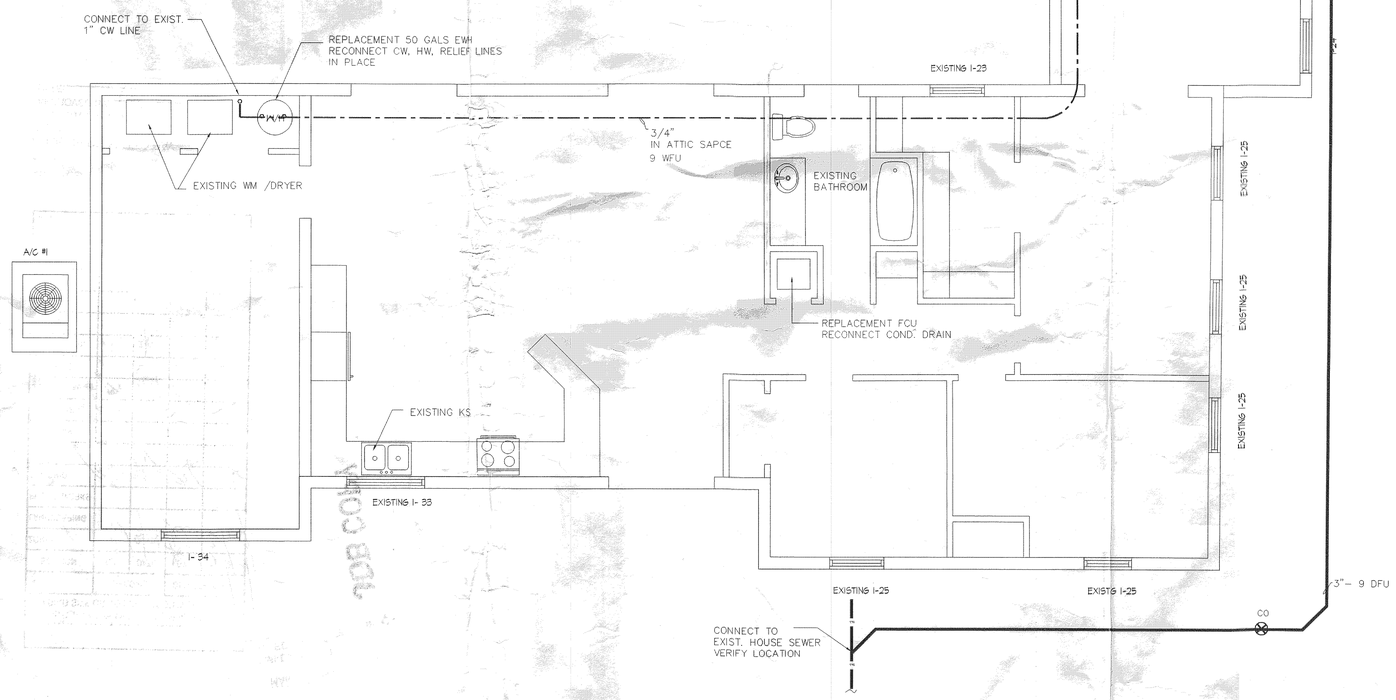

PLUMBING FLOOR PLAN

SCALE: 1" = 1'-0"

NORTH

REVISIONS	BY

JOB NUMBER 04-001-AA

orlando m. fortun
CONSULTING ENGINEERS, P.A.
CIVIL / STRUCTURAL
P.E. 22244
7220 S.W. 94th TERR. MIAMI, FLORIDA 33155
TEL: (305) 262-6225 FAX: (305) 262-2014

PROPOSED ADDITION PLAN FOR:

MR. & MRS. MISHART TORRES

LOCATED AT:
18321 SW 8TH AVENUE MIAMI, FLORIDA. PH: (305) 264.8092

DRAWN : AG	
CHECKED : O.M.F.	
DATE : 11.19.05	
SCALE : SHOWN	
JOB NO.: 04-001-AA	
SHEET	
P-1	
OF 1 SHEETS	

JAN 26 2006

B2005-1860

18321 SW 87 Ave

ROAD M FIRE K SCHOOL
IMPACT FEE PAID
MAR 30 2005
MIAMI-DADE COUNTY
APPROVED

JOB COPY

SECTION	APPROVED BY	DATE	DISAPPROVED BY	DATE
ZONING		3/23/05		2/10/05
LANDSCAPING				
PUBLIC WORKS				
BUILDING		3/11/05		2/9/05

VILLAGE OF PALMETTO BAY
BUILDING DEPARTMENT
STRUCTURAL SECTION
APPROVED BY:
DATE:

Derm Number: 2005-0301-1017-1106
Contact Name: MR. LEO VALLADARES
Contact Phone: (305)418-9433
Folio: 33-5034-014-0280
Project Name: TORRES SINGLE FAMILY
Date Received: 03/01/2005
Reviewer Name: JOSE FRIAS

DEPT. OF ENVIRONMENTAL RESOURCES MANAGEMENT
OFFICE OF PLAN REVIEW SERVICES

REVIEW TYPE	APPROVED	DATE
ENV CO		
FLOOD PLAN		
INDUSTRY		
ASBESTOS		
PAVING		
STORAGE TANK		
WASTE RES		
PRETREATMENT		
WATER SUPPLY		
WASTEWATER		
AIR		
AGRICULTURAL		
AIRPORT		
UPLAND & FW		
OTHER		

FINAL DERM APPROVAL
SIGNATURE 3/2/05 DATE

*PERMIT IS NOT VALID UNTIL FINAL DEPARTMENTAL APPROVAL IS ISSUED BY THE OFFICE OF PLAN REVIEW SERVICES

FOR THE REMOVAL OR RELOCATION OF ANY TREE, A PERMIT REVIEW IS REQUIRED BY DERM