Rush Building

PLANS PROCESSING

Process Number: BLD 2015 7898

Description of Work: New SFR

Property Address: 13940 Old Cotter Rd.

Department	Date In	Date Out	Total Business Days	Approved	Denied	Comments
Planning & Zoning	4/26/16	4/28/16		✓		
Building						
ADA Review	4/29/16	5/2/16			✓	
		5/3/16		✓		
Structural	4/12/16	4/19/16	5	✓ MC		
~~Electrical~~						
~~Mechanical~~						
Plumbing	4/11/16		4/15/16	✓		
Public Works	4/20/16	4/25/16		✓		Approval / Conditional
Pending Corrections						
Code Enforcement Verification	5/3/16			NB		
Job Cost/ Value of Work (Inspector Approval)	700,000-					
Building Official approval						
Final Signature	5/3/16					
Pricing						
Call for Pick up						

Village of Palmetto Bay Permit Application

Tray 20

Department of Building & Capital Projects
9705 E. Hibiscus Street
Palmetto Bay, Florida 33157
Phone: (305) 259-1250 Fax: (866) 927-5576 Inspections: (305) 259-1253

Change of Contractor

GENERAL INFORMATION Please read these instructions carefully before submitting the work for review

This application must be completed and signed by both the property owner and qualifier. Both of these signatures must be notarized. Please print legibly or type in order not to delay your application. For roofing permits, in addition to this permit you must also fill out a roofing permit application. Express permits require an additional fee and will only be accepted between the hours of 8:00 A.M. and 10:00 A.M., Monday through Friday. All other permits/plans must be dropped off before 4:30 p.m. for regular processing. During the processing of your application you may be asked to submit additional information. There may be additional permits and reviews required from other governmental agencies not affiliated with Palmetto Bay.

APPLICATION:

Clerk's Initials	Plan Process Number	Master Permit Number	Subsidiary Permit Number(s)	Expiration Date
MAR		BLD-2015-7898		

Job Address: 13940 Old Cutler Rd Palmetto Bay, Fl. 33158
Address / Unit number / City / State / Zip Code

Folio Number: 33-5023-003-0200

Lot: 2 Block: 3

Subdivision: Fremont Acres PB: 50 PG: 65

Current Use of Property:

Proposed Use of Property:

Description of Work: New Home

Dumpster permit to be included? Yes____ NO____

Zoning: E1 Square Feet: 6600

Tenant Information: Unit Number:

Linear Feet: Units: Stories:

Value of Proposed Work: Est. Bldg. Value:

Tax Assessed Value:

Flood Zone: Base Floor Elev.:

Homeowner's Association:

I affirm that there ☐ are or ☐ are no restrictive covenants associated with the underlying property that would affect the pending application. Failure to disclose this information shall result in the immediate revocation of any type of permit or certificate of use/occupancy.

Check Permit Type		Check Permit Change		Check Type of Improvement			
Building		Change of Contractor		New Construction		Deck/Concrete flatwork	
Electrical		Permit Renewal		Exterior Alteration		Window Replacement	
Mechanical		Plan Revision		Interior Alteration		Shutters	
Plumbing		Permit Extension		Attached Addition		Garage Doors	
LPGX		Supplement		Detached Addition		Storage Shed	
Roofing		Re-inspection Fee		Repair		Railings	
Fence		PACE Program		Repair due to Fire		Stairs	
Sign				Demolish		Windows/Doors	
Public Works				Screen Enclosure		Roofing	
Other				Driveway		Re-Roof	
				Fence		Seal-cote	
				Pool		Other	

Architect Information	Engineer Information
Name:	Name:
License Number:	License Number:
Address:	Address:
Telephone Number:	Telephone Number:
Email address	Email address

Property Owner	Contractor
Name: AIDA RODRIGUEZ	Company Name DEGLE INDUSTRIES
Address: 13940 Old Cutler Rd	Qualifier RYAN PRENDES
Home Telephone:	License Number CGC1508779
Business Telephone: 305 987 9733	Address 4973 SW 74 CT
Email Address Arodfyi@msn.com	Telephone Number 305-986 8632
Fax Number:	Fax Number

Plans Processing Contact Person	
Name: Carlos	Email:
Telephone Number: 305 467 3006	

Bond Company (if applicable)	Mortgage Lender
Name:	Name:
Address:	Address:
City: State: Zip	City: State: Zip
Does Property have Homestead Exemption	Email Address

Classification Of Proposed Work
Residential ☐ Duplex ☐ Townhouse ☐ Multi Family ☐ Commercial ☐ Industrial ☐ Other ☐
Effective Code_____ Occupancy_____ Construction Type _____
Zoning: Variance Number: Remarks:

OWNER AFFIDAVIT

Application is hereby made to obtain a permit to do the work and installation as indicated. I certify that no work or installation has commenced prior to the issuance of a permit and that all work will be performed to meet the standards of all laws regulating construction in this jurisdiction. I understand that a separate permit must be secured for **ELECTRICAL, MECHANICAL, PLUMBING, SIGNS, WELLS, POOLS, ROOFING, SHUTTERS, WINDOWS, FURNACES, BOILERS, HEATERS, TANKS, FENCE, DRIVEWAYS and AIR CONDITIONERS, ETC.** In addition to the requirements of this permit, there may be additional restrictions found in the Public Records, and there may be additional permits required from other governmental entities.

I, the owner of the property, have disclosed all information related to any work that has been performed in the prior twelve months to the Building Division as part of this application. Further, I am fully aware that if the cumulative cost of work to my home or business under this and any other permit equals or exceeds fifty percent of the fair market value of the structure, the entire structure must meet the present federal flood criteria for finished floor elevation. I am also fully aware that if the cost of work to my home or business under this and any other permit equals or exceeds fifty per cent of the replacement cost of the structure, then the entire structure must conform to current code requirements of the Florida Building Code.

I, the owner of the property, understand that a permit application is subject to denial and a validated permit or permit card is subject to revocation or modification based upon applicable deeds, covenants, declarations, easements and any other legal restriction. By issuing a permit, the Village of Palmetto Bay makes no representation as to the existence or validity of any property restriction.

I, the owner of the property certify that all the foregoing information is accurate and that all work will be done in compliance with all applicable laws regulating construction and zoning.

WARNING TO OWNER: YOUR FAILURE TO RECORD A NOTICE OF COMMENCEMENT MAY RESULT IN YOUR PAYING TWICE FOR IMPROVEMENTS TO YOUR PROPERTY. A NOTICE OF COMMENCEMENT MUST BE RECORDED AND POSTED ON THE JOB SITE BEFORE THE FIRST INSPECTION. IF YOU INTEND TO OBTAIN FINANCING, CONSULT WITH YOUR LENDER OR AN ATTORNEY BEFORE COMMENCING WORK OR RECORDING YOUR NOTICE OF COMMENCEMENT.

X _____
Signature of Owner

State of Florida, County of MIAMI-DADE

Sworn to (or affirmed) and subscribed before this 21ST day of FEBRUARY, 2018.

by (print name) AIDA RODRIGUEZ

Notary Name Carmen Garcia

Personally known ☒ or I.D. ☐

Type of identification produced:

CARMEN GARCIA
Notary Public – State of Florida
Commission # GG 157008
My Comm. Expires Oct 31, 2021
Bonded through National Notary Assn.

X _____
Signature of Qualifier

State of Florida, County of MIAMI-DADE

Sworn to (or affirmed) and subscribed before this 21ST day of FEBRUARY, 2018.

by (print name) RYAN PRENDES

Notary Name Carmen Garcia

Personally known or I.D. _____

Type of identification produced: _____

CARMEN GARCIA
Notary Public – State of Florida
Commission # GG 157008
My Comm. Expires Oct 31, 2021
Bonded through National Notary Assn.

IMPORTANT NOTICES

- Do not begin work without receiving you validated permit and permit card. Applying for a permit does not grant you the right to commence construction. Construction can only occur during the hours of 7:00 a.m. to 7:00 p.m., Monday thru Saturday and from the hours of 9:00 a.m. to 6:00 p.m. on Sundays and Federal holidays.
- All construction sites must be maintained in a clean and orderly condition free from construction debris. Failure to do so will result in a fine and a suspension of inspections until said property is cleaned.
- Streets and neighboring properties shall be kept free from dirt and debris.
- Swales must be protected from damage by equipment or vehicles and sidewalks cannot be blocked.
- Portable Toilets for construction jobs require a separate permit. If toilet is not available the inspection will not be performed.
- Water cannot be discharged into the right of way or storm drains without the approval of the Public Works Department.
- No equipment or materials can be stored on the right of way; they must only be stored on your property.
- Florida Department of Health approval is required for applications involving Septic Tanks. Department of Environmental Resources Management (DERM) and /or Miami-Dade Water and Sewer Department approval is required for applications involving sewers and water. The tree section of the Department of Environmental Resources Management (DERM) approval is required on all landscape plans and on all tree removal applications.

CHECKLIST (OFFICE USE ONLY)

☐ OWNER-BUILDER FORM (Attached)

☐ FIRE DEPARTMENT APPROVAL (Commercial/multi (family only)

☐ CONCURRENCY (New Construction)

☐ PROOF OF OWNERSHIP (Attached)

☐ CONDO ASSOCIATION APPROVAL

☐ UPFRONT FEES AMOUNT: _____

☐ HEALTH DEPARTMENT APPROVAL (Septic/Sewer)

☐ IMPACT FEE (New Construction)

☐ SCHOOL REVIEW (New Construction)

☐ DERM REVIEW (New Construction/Additions/Tree Removal)

☐ PUBLIC WORKS

☐ PERMIT CLERK REVIEW
By: _____

- ☐ Complete Application
- ☐ Current liability ins.
- ☐ Worker's Comp.
- ☐ Cont. Lic. Check

☐ OTHER (Specify and Attach)

☐ FLORIDA DEPARTMENT OF BUSINESS AND PROFESSIONAL REGULATION APPROVAL (RESTAURANTS)

PERMIT FEES (OFFICE USE ONLY)

Village of Palmetto Bay Permit Fees		**Art in Public Places**	
Miami-Dade County Fees (sq. ft. x $65//1000x0.60)		**Certificate of Use and Occupancy**	
Flood Zone Review		**Zoning Inspection Fee** ($50.00 per application)	
Radon-Inspector State Educational Fund and DCA State fee		**Administration Fee**	
Code Enforcement Fine		**Express Fee** (25.00)	
Certificate of Completion		**Public Works Fee**	
Construction Sign Fee		**Landscape Review Fee** (175.00 per hour)	
Roll-off Waste Container Fee (105.00 per container site)		**Special Review Fee** (89.25 per hour)	
Rework Fee		**Other** Change of Contractor paid for	$ 167.00

PLAN REVIEWER APPROVAL AREA (OFFICE USE ONLY)

SECTION	REVIEWER APPROVAL'S NAME	APPROVAL DATE	REJECTED DATE NUMBER 1	REJECTED DATE NUMBER 2	REJECTED DATE NUMBER 3
COMMUNITY DEVELOPMENT					
ZONING					
ELECTRICAL					
MECHANICAL					
PLUMBING					
FIRE					
ROOFING					
PUBLIC WORKS					
PLANNING					
STRUCTURAL					
BUILDING					
BUILDING OFFICIAL					

REWORKS: A fee of **$105.50** may be charged for failure to make required corrections previously indicated. The fee shall be charged after the initial review plus one follow up review per trade. Please note that Florida Statutes 553.80 section 2(b) states "with respect to evaluation of design professionals documents, if a local government finds it necessary, in order to enforce compliance with the Florida Building Code and issue a permit, to reject design documents required by the code three or more times for failure to correct a code violation specifically noted in each rejection, including but not limited to egress, fire protection, structural stability, energy, accessibility, lighting, ventilation, electrical, mechanical, plumbing, and gas systems, or other requirements identified by rule of the Florida Building Commission adopted pursuant to Chapter 120, the local government shall impose, each time after third such review the plans are rejected for that code violation a fee of **four times the amount** of the proportion of the permit fee attributed to plans review".

ISSUING OFFICIAL

FINAL PLAN REVIEWED AND PREPARED FOR ISSUANCE BY: [signature] 3/13/18 DATE:

CONDITIONS OF APPROVAL

PLAN TRACKING

Plans Checked out	Date	Clerk	Plans Checked in	Date	Clerk

PALMETTO BAY BUILDING & CAPITAL PROJECTS
9705 E. HIBISCUS ST
PALMETTO BAY, FL 33157
P#305-259-1250
FAX# 1-866-927-5576

Request for Change of Contractor
And
Hold Harmless Agreement

Permit No. BLD2015-7898

Re: Property Locate at (address and legal description) 13940 Old Cutler Rd. Palmetto Bay, 33158

As legal owner(s) of the subject property, I no longer authorize Sanchez Arsuago (Name of contractor you wish to change), who is the current permit holder for the above referenced property under the above mentioned permit number, to continue with the work covered by the mentioned permit. I hereby authorize Deere Inc. (name of new contractor), to apply for such permit to construct or complete the construction on the referenced property.

I agree to hold Palmetto Bay, its agent and authorize personnel harmless and relieve them from any responsibility or liability for any legal actions or damage, cost or expense (including attorney's fee) resulting from this change of contractor. I furthermore assume responsibility for correction, if work performed under the permit for which I am requesting a change of contractor. In event there has been a change of ownership of the property, the new owner assumes the responsibility for notifying the previous owner of his or her intent to substitute professional.

I have__ (have not) ___ notified the current permit holder my decision
Please check one that applies

Legal Owner(s) of Property

Owner: _____

Owner: _____

Owner: _____

State of Fl
County of Dade) SS:
The person(s), whose signature(s) appear (s) above, deposes that he/she (they) is (are) the legal owner(s) of the above property.

SWORN TO AND SUBSCRIBED
Before me this 21 day of FEB 20 18
By: Carmen Garcia
(Seal)

(Print/type or stamp name of notary)
☒ Personally known
Or
☐ Produce Identification
Type of Identification Produced

CARMEN GARCIA
Notary Public – State of Florida
Commission # GG 157008
My Comm. Expires Oct 31, 2021
Bonded through National Notary Assn.

New Contractor
I, a licensed contractor to perform work in the Village of Palmetto Bay, will apply to the Village of Palmetto Bay to continue/complete the work, which was started by the current permit holder, and I will be responsible to obtain all required inspection from the Village of Palmetto Bay.

Contractor _____

State of Fl
County of Dade) SS:

SWORN TO AND SUBSCRIBED
Before me this 21 day of FEB 20 18
By: Carmen Garcia
(Seal)

(Print/type or stamp name of notary)
☒ Personally known
Or
☐ Produce Identification
Type of Identification Produced

CARMEN GARCIA
Notary Public – State of Florida
Commission # GG 157008
My Comm. Expires Oct 31, 2021
Bonded through National Notary Assn.

K:\BCP\CHANGE OF Contractor.doc

OFFICE OF THE PROPERTY APPRAISER

Summary Report

Generated On : 3/9/2018

Property Information	
Folio:	33-5032-007-0330
Property Address:	9745 SW 182 ST Palmetto Bay, FL 33157-5515
Owner	9745SW182ST LLC
Mailing Address	13800 SW 82 AVE PALMETTO BAY, FL 33158 USA
PA Primary Zone	0100 SINGLE FAMILY - GENERAL
Primary Land Use	0101 RESIDENTIAL - SINGLE FAMILY : 1 UNIT
Beds / Baths / Half	2 / 1 / 0
Floors	1
Living Units	1
Actual Area	1,409 Sq.Ft
Living Area	1,035 Sq.Ft
Adjusted Area	1,058 Sq.Ft
Lot Size	12,101 Sq.Ft
Year Built	1951

Assessment Information			
Year	2017	2016	2015
Land Value	$88,204	$88,204	$58,803
Building Value	$53,470	$53,608	$53,746
XF Value	$1,375	$1,398	$1,746
Market Value	$143,049	$143,210	$114,295
Assessed Value	$112,217	$102,016	$93,238

Taxable Value Information			
	2017	2016	2015
County			
Exemption Value	$0	$0	$0
Taxable Value	$112,217	$102,016	$93,238
School Board			
Exemption Value	$0	$0	$0
Taxable Value	$143,049	$143,210	$114,295
City			
Exemption Value	$0	$0	$0
Taxable Value	$112,217	$102,016	$93,238
Regional			
Exemption Value	$0	$0	$0
Taxable Value	$112,217	$102,016	$93,238

Benefits Information				
Benefit	Type	2017	2016	2015
Non-Homestead Cap	Assessment Reduction	$30,832	$41,194	$21,057

Note: Not all benefits are applicable to all Taxable Values (i.e. County, School Board, City, Regional).

Sales Information			
Previous Sale	Price	OR Book-Page	Qualification Description
03/15/2017	$98,000	30480-1308	Atypical exposure to market; atypical motivation
05/01/2007	$0	25674-0964	Sales which are disqualified as a result of examination of the deed

Short Legal Description
32 55 40
MORNINGSIDE ACRES PB 46-7
LOT 3 BLK 4
LOT SIZE 96.810 X 125
F/A/U 30-5032-007-0330

The Office of the Property Appraiser is continually editing and updating the tax roll. This website may not reflect the most current information on record. The Property Appraiser and Miami-Dade County assumes no liability, see full disclaimer and User Agreement at http://www.miamidade.gov/info/disclaimer.asp

Version:

CFN: 20180108615 BOOK 30872 PAGE 3617
DATE:02/23/2018 08:59:58 AM
HARVEY RUVIN, CLERK OF COURT, MIA-DADE CTY

Prepared By:
Paul Palmer, Esq.
Palmer, Palmer & Mangiero
12790 S. Dixie Highway
Miami, FL 33156

DOCUMENT COVER PAGE

DOCUMENT TITLE: Death Certificate
(Warranty Deed, Mortgage, Affidavit, etc)

EXECUTED BY: Vital Statistics

TO: Rouget Jesus Sanchez

BRIEF LEGAL DESCRIPTION: (If Applicable)

STATE OF FLORIDA

THIS DOCUMENT HAS A LIGHT BACKGROUND ON TRUE WATERMARKED PAPER. HOLD TO LIGHT TO VERIFY FLORIDA WATERMARK.

BUREAU of VITAL STATISTICS

CERTIFICATION OF DEATH

STATE FILE NUMBER: 2017126490

DATE ISSUED: FEBRUARY 2, 2018

DATE FILED: AUGUST 17, 2017

DECEDENT INFORMATION

NAME: ROUGET JESUS SANCHEZ

DATE OF DEATH: AUGUST 9, 2017 SEX: MALE AGE: 049 YEARS

DATE OF BIRTH: NOVEMBER 17, 1967 SSN: 593-30-8073

BIRTHPLACE: CORAL GABLES, FLORIDA, UNITED STATES

PLACE WHERE DEATH OCCURRED: DECEDENT'S HOME

FACILITY NAME OR STREET ADDRESS: 7485 SW 179 STREET

LOCATION OF DEATH: MIAMI, MIAMI-DADE COUNTY, 33157

RESIDENCE: 7485 SW 179 STREET, MIAMI, FLORIDA 33157, UNITED STATES

COUNTY: MIAMI-DADE

OCCUPATION, INDUSTRY: GENERAL CONTRACTOR, OWN BUSINESS

EDUCATION: BACHELORS DEGREE EVER IN U.S. ARMED FORCES? NO

HISPANIC OR HAITIAN ORIGIN? YES, CUBAN

RACE: WHITE

SURVIVING SPOUSE / PARENT NAME INFORMATION

(NAME PRIOR TO FIRST MARRIAGE, IF APPLICABLE)

MARITAL STATUS: MARRIED

SURVIVING SPOUSE NAME: AIDA NOLAN

FATHER'S/PARENT'S NAME: JOSE R SANCHEZ

MOTHER'S/PARENT'S NAME: MARGARITA BENEDIT

INFORMANT, FUNERAL FACILITY AND PLACE OF DISPOSITION INFORMATION

INFORMANT'S NAME: JOSE R SANCHEZ

RELATIONSHIP TO DECEDENT: FATHER

INFORMANT'S ADDRESS: 15235 SW 140 STREET, MIAMI, FLORIDA 33196, UNITED STATES

FUNERAL DIRECTOR/LICENSE NUMBER: JENNIFER SOCARRAS, F062313

FUNERAL FACILITY: FUNERARIA MEMORIAL PLAN - WESTCHESTER F081148
9800 CORAL WAY, MIAMI, FLORIDA 33165

METHOD OF DISPOSITION: ENTOMBMENT

PLACE OF DISPOSITION: OUR LADY OF MERCY
MIAMI, FLORIDA

CERTIFIER INFORMATION

TYPE OF CERTIFIER: CERTIFYING PHYSICIAN MEDICAL EXAMINER CASE NUMBER: NOT APPLICABLE

TIME OF DEATH (24 HOUR): 0445 DATE CERTIFIED: AUGUST 16, 2017

CERTIFIER'S NAME: BENJAMIN R VILLALBA

CERTIFIER'S LICENSE NUMBER: ME33974

NAME OF ATTENDING PHYSICIAN (IF OTHER THAN CERTIFIER): NOT ENTERED

, STATE REGISTRAR

REQ: 2018936785

THE ABOVE SIGNATURE CERTIFIES THAT THIS IS A TRUE AND CORRECT COPY OF THE OFFICIAL RECORD ON FILE IN THIS OFFICE.

WARNING: THIS DOCUMENT IS PRINTED OR PHOTOCOPIED ON SECURITY PAPER WITH WATERMARKS OF THE GREAT SEAL OF THE STATE OF FLORIDA. DO NOT ACCEPT WITHOUT VERIFYING THE PRESENCE OF THE WATERMARKS. THE DOCUMENT FACE CONTAINS A MULTICOLORED BACKGROUND, GOLD EMBOSSED SEAL, AND THERMOCHROMIC FL. THE BACK CONTAINS SPECIAL LINES WITH TEXT. THE DOCUMENT WILL NOT PRODUCE A COLOR COPY.

* 3 7 2 2 1 8 9 8 *

DH FORM 1946 (03-13)

CERTIFICATION OF VITAL RECORD

Florida HEALTH

Village of Palmetto Bay Permit Application

Department of Building & Capital Projects
9705 E. Hibiscus Street
Palmetto Bay, Florida 33157
Phone: (305) 259-1250 Fax: (866) 927-5576 Inspections: (305) 259-1253

GENERAL INFORMATION: Please read these instructions carefully before submitting the work for review

This application must be completed and signed by both the property owner and qualifier. Both of these signatures must be notarized. Please print legibly or type in order not to delay your application. For roofing permits, in addition to this permit you must also fill out a roofing permit application. Express permits require an additional fee and will only be accepted between the hours of 8:00 A.M. and 10:00 A.M., Monday through Friday. All other permits/plans must be dropped off before 4:30 p.m. for regular processing. During the processing of your application you may be asked to submit additional information. There may be additional permits and reviews required from other governmental agencies not affiliated with Palmetto Bay.

APPLICATION

Clerk's Initials	Plan Process Number	Master Permit Number	Subsidiary Permit Number(s)	Expiration Date
	Bld-2015-7898			

Job Address: 13940 OLD CUTTLER ROAD. PALMETTO BAY, FL.
Address / Unit number / City / State / Zip Code

Folio Number: _____

Lot: 2 Block: 3

Subdivision: FARMER'S ACRES PB: 50 PG: 65

Current Use of Property: _____

Proposed Use of Property: New Single family

Description of Work: NEW SINGLE FAMILY RES.

Zoning: E-1 Square Feet: 6,600 ft

Tenant Information: Unit Number:

Linear Feet: _____ Units: _____ Stories: _____

Value of Proposed Work: 700,000 Est. Bldg. Value: _____

Tax Assessed Value: _____

Flood Zone: _____ Base Floor Elev.: _____

Homeowner's Association: _____

I affirm that there ☐ are or ☐ are no restrictive covenants associated with the underlying property that would affect the pending application. Failure to disclose this information shall result in the immediate revocation of any type of permit or certificate of use/occupancy.

Check Permit Type		Check Permit Change		Check Type of Improvement			
Building	✓	Change of Contractor		New Construction	✓	Deck/Concrete flatwork	
Electrical		Permit Renewal		Exterior Alteration		Window Replacement	
Mechanical		Plan Revision		Interior Alteration		Shutters	
Plumbing		Permit Extension		Attached Addition		Garage Doors	
LPGX		Supplement		Detached Addition		Storage Shed	
Roofing		Re-inspection Fee		Repair		Railings	
Fence				Repair due to Fire		Stairs	
Sign				Demolish		Windows/Doors	
Public Works				Screen Enclosure		Roofing	
Other				Driveway		Re-Roof	
				Fence		Seal-cote	
				Pool		Other	

Architect Information	Engineer Information
Name: LEOPOLDO BELLON	Name:
License Number: AIA (AR-8737)	License Number:
Address: 13131 SW 132 ST. SUITE 104	Address:
Telephone Number: 305 790 2626	Telephone Number:
Fax Number: 305-278-7473	Fax Number:
Other:	Other:

Property Owner	Contractor
Name: ROUGER SANCHEZ	Company Name
Address: 13940 OLD CUTLER RD.	Qualifier
Home Telephone: 305.219.5966	License Number
Business Telephone:	Address
Other Telephone: 305.	Telephone Number
Fax Number:	Fax Number
Does Property have Homestead Exemption	**Phone Number for Pick Up** 3/219-5966

Bond Company (if applicable)	Mortgage Lender
Name:	Name:
Address:	Address:
City: State: Zip	City: State: Zip

Classification Of Proposed Work
Residential ☑ Duplex ☐ Townhouse ☐ Multi Family ☐ Commercial ☐ Industrial ☐ Other ☐
Effective Code_____ Occupancy_____ Construction Type _____
Zoning: E-1 Variance Number: Remarks:

OWNER AFFIDAVIT

Application is hereby made to obtain a permit to do the work and installation as indicated. I certify that no work or installation has commenced prior to the issuance of a permit and that all work will be performed to meet the standards of all laws regulating construction in this jurisdiction. I understand that a separate permit must be secured for **ELECTRICAL, MECHANICAL, PLUMBING, SIGNS, WELLS, POOLS, ROOFING, SHUTTERS, WINDOWS, FURNACES, BOILERS, HEATERS, TANKS, FENCE, DRIVEWAYS and AIR CONDITIONERS, ETC.** In addition to the requirements of this permit, there may be additional restrictions found in the Public Records, and there may be additional permits required from other governmental entities.

I, the owner of the property, have disclosed all information related to any work that has been performed in the prior twelve months to the Building Division as part of this application. Further, I am fully aware that if the cumulative cost of work to my home or business under this and any other permit equals or exceeds fifty percent of the fair market value of the structure, the entire structure must meet the present federal flood criteria for finished floor elevation. I am also fully aware that if the cost of work to my home or business under this and any other permit equals or exceeds fifty per cent of the replacement cost of the structure, then the entire structure must conform to current code requirements of the Florida Building Code.

I, the owner of the property, understand that a permit application is subject to denial and a validated permit or permit card is subject to revocation or modification based upon applicable deeds, covenants, declarations, easements and any other legal restriction. By issuing a permit, the Village of Palmetto Bay makes no representation as to the existence or validity of any property restriction.

I, the owner of the property certify that all the foregoing information is accurate and that all work will be done in compliance with all applicable laws regulating construction and zoning.

WARNING TO OWNER: YOUR FAILURE TO RECORD A NOTICE OF COMMENCEMENT MAY RESULT IN YOUR PAYING TWICE FOR IMPROVMENTS TO YOUR PROPERTY. A NOTICE OF COMMENCEMENT MUST BE RECORDED AND POSTED ON THE JOB SITE BEFORE THE FIRST INSPECTION. IF YOU INTEND TO OBTAIN FINANCING, CONSULT WITH YOUR LENDER OR AN ATTORNEY BEFORE COMMENCING WORK OR RECORDING YOUR NOTICE OF COMMENCEMENT.

Signature of Owner

State of Florida, County of

Sworn to (or affirmed) and subscribed before this 26 day of OCTOBER 20 19.
by (print name) ROUGER SANCHEZ

Notary Name KELSY LASCANO

Personally known ☑ or I.D.
Type of identification produced

Notary Public State of Florida
Kelsy V Lascano
My Commission FF 227437
Expires 05/10/2019

Signature of Qualifier OWNER

State of Florida, County of

Sworn to (or affirmed) and subscribed before this 26 day of OCTOBER 20 19.
by (print name)

Notary Name KELSY

Personally known or I.D.
Type of identification produced:

Notary Public State of Florida
Kelsy V Lascano
My Commission FF 227437
Expires 05/10/2019

IMPORTANT NOTICES

- Do not begin work without receiving you validated permit and permit card. Applying for a permit does not grant you the right to commence construction. Construction can only occur during the hours of 7:00 a.m. to 6:00 p.m., Monday thru Friday and from the hours of 9:00 a.m. to 5:00 p.m. on Saturdays. No construction activity is permitted on Sunday
- All construction sites must be maintained in a clean and orderly condition free from construction debris. Failure to do so will result in a fine and a suspension of inspections until said property is cleaned.
- Streets and neighboring properties shall be kept free from dirt and debris.
- Swales must be protected from damage by equipment or vehicles and sidewalks cannot be blocked.
- Portable Toilets for construction jobs require a separate permit. If toilet is not available the inspection will not be performed.
- Water cannot be discharged into the right of way or storm drains without the approval of the Public Works Department.
- No equipment or materials can be stored on the right of way; they must only be stored on your property.
- Florida Department of Health approval is required for applications involving Septic Tanks. Department of Environmental Resources Management (DERM) and /or Miami-Dade Water and Sewer Department approval is required for applications involving sewers and water. The tree section of the Department of Environmental Resources Management (DERM) approval is required on all landscape plans and on all tree removal applications.

OFFICE USE ONLY

☐ OWNER-BUILDER FORM (Attached)

☐ FIRE DEPARTMENT APPROVAL (Commercial/multi (family only)

☐ CONCURRENCY (New Construction)

☐ PROOF OF OWNERSHIP (Attached)

☐ CONDO ASSOCIATION APPROVAL

☐ UPFRONT FEES AMOUNT: _____

☐ HEALTH DEPARTMENT APPROVAL (Septic/Sewer)

☐ IMPACT FEE (New Construction)

☐ SCHOOL REVIEW (New Construction)

☐ DERM REVIEW (New Construction/Additions/Tree Removal)

☐ PUBLIC WORKS

☐ PERMIT CLERK REVIEW
By: _____

- ☐ Complete Application
- ☐ Current liability ins.
- ☐ Worker's Comp.
- ☐ Cont. Lic. Check

☐ OTHER (Specify and Attach)

☐ FLORIDA DEPARTMENT OF BUISNESS AND PROFESSIONAL REGULATION APPROVAL (RESTAURANTS)

PERMIT FEES (OFFICE USE ONLY)

Scanning Fees Small (1.85 per sheet)		**Art in Public Places**	
Scanning Fees Large (3.50 per sheet)		**Certificate of Use and Occupancy**	
Village of Palmetto Bay Permit Fees		**Concurrency Fee** (7.35%)	
Miami-Dade County Fees (sq. ft. x $65//1000x0.60)		**Technology Fee** (6.3%)	
Flood Zone Review		**Zoning Inspection Fee** (157.50 per application)	
Radon-Inspector State Educational Fund and DCA State fee		**Administration Fee**	
Code Enforcement Fine		**Express Fee** (25.00)	
Certificate of Completion		**Public Works Fee**	
Construction Sign Fee		**Landscape Review Fee** (175.00 per hour)	
Roll-off Waste Container Fee (105.00 per container site)		**Special Review Fee** (89.25 per hour)	
Rework Fee		**Other**	

PLAN REVIEWER APPROVAL AREA (OFFICE USE ONLY)

SECTION	REVIEWER APPROVAL'S NAME	APPROVAL DATE	REJECTED DATE NUMBER 1	REJECTED DATE NUMBER 2	REJECTED DATE NUMBER 3
COMMUNITY DEVELOPMENT					
ZONING					
ELECTRICAL					
MECHANICAL					
PLUMBING					
FIRE					
ROOFING					
PUBLIC WORKS					
PLANNING					
STRUCTURAL					
BUILDING					
BUILDING OFFICIAL					

REWORKS: A fee of **$105.50** may be charged for failure to make required corrections previously indicated. The fee shall be charged after the initial review plus one follow up review per trade. Please note that Florida Statutes 553.80 section 2(b) states "with respect to evaluation of design professionals documents, if a local government finds it necessary, in order to enforce compliance with the Florida Building Code and issue a permit, to reject design documents required by the code three or more times for failure to correct a code violation specifically noted in each rejection, including but not limited to egress, fire protection, structural stability, energy, accessibility, lighting, ventilation, electrical, mechanical, plumbing, and gas systems, or other requirements identified by rule of the Florida Building Commission adopted pursuant to Chapter 120, the local government shall impose, each time after third such review the plans are rejected for that code violation a fee of **four times the amount** of the proportion of the permit fee attributed to plans review".

ISSUING OFFICAL

FINAL PLAN REVIEWED AND PREPARED FOR ISSUANCE BY: _____ DATE: _____

PLAN TRACKING

Plans Checked out	Date	Clerk	Plans Checked in	Date	Clerk

Palmetto Bay Building Department
Comment Sheet

Department: PLUMBING DIVISION

Inspector: GERARDO URGELLES

Date: 10/29/15

(1) PROVIDE DEPT OF HEALTH APPROVAL
(2) PROVIDE DERM APPROVAL
(3) PROVIDE WASD WATER VERIFICATION LETTER

1/25/16

SAME COMMENTS

3/8/16

SAME COMMENTS RE-REVIEW FEE

Village of Palmetto Bay Permit Application

Department of Building & Capital Projects
9705 E. Hibiscus Street
Palmetto Bay, Florida 33157
Phone: (305) 259-1250 Fax: (866) 927-5576 Inspections: (305) 259-1253

GENERAL INFORMATION: Please read these instructions carefully before submitting the work for review

This application must be completed and signed by both the property owner and qualifier. Both of these signatures must be notarized. Please print legibly or type in order not to delay your application. For roofing permits, in addition to this permit you must also fill out a roofing permit application. Express permits require an additional fee and will only be accepted between the hours of 8:00 A.M. and 10:00 A.M., Monday through Friday. All other permits/plans must be dropped off before 4:30 p.m. for regular processing. During the processing of your application you may be asked to submit additional information. There may be additional permits and reviews required from other governmental agencies not affiliated with Palmetto Bay.

APPLICATION

Clerk's Initials	Plan Process Number	Master Permit Number	Subsidiary Permit Number(s)	Expiration Date
	Bld-2015-7898			

Job Address: 13940 OLD CUTTLER ROAD. PALMETTO BAY, FL.
Address Unit number City State Zip Code

Folio Number:

Lot: 2 Block: 3

Subdivision: FARMER'S ACRES PB: 50 PG: 65

Current Use of Property:

Proposed Use of Property: New Single family

Description of Work: NEW SINGLE FAMILY RES.

Zoning: E-1 Square Feet: 6,600 ft

Tenant Information: Unit Number:

Linear Feet: Units: Stories:

Value of Proposed Work: 700,000 Est. Bldg. Value:

Tax Assessed Value:

Flood Zone: Base Floor Elev.:

Homeowner's Association:

I affirm that there ☐ are or ☐ are no restrictive covenants associated with the underlying property that would affect the pending application. Failure to disclose this information shall result in the immediate revocation of any type of permit or certificate of use/occupancy.

Check Permit Type		Check Permit Change		Check Type of Improvement			
Building	✓	Change of Contractor		New Construction	✓	Deck/Concrete flatwork	
Electrical		Permit Renewal		Exterior Alteration		Window Replacement	
Mechanical		Plan Revision		Interior Alteration		Shutters	
Plumbing		Permit Extension		Attached Addition		Garage Doors	
LPGX		Supplement		Detached Addition		Storage Shed	
Roofing		Re-inspection Fee		Repair		Railings	
Fence				Repair due to Fire		Stairs	
Sign				Demolish		Windows/Doors	
Public Works				Screen Enclosure		Roofing	
Other				Driveway		Re-Roof	
				Fence		Seal-cote	
				Pool		Other	

Architect Information	Engineer Information
Name: LEOPOLDO BELLON	Name:
License Number: AIA (AR-8737)	License Number:
Address: 13131 SW 132 ST. SUITE 104	Address:
Telephone Number: 305 790 2626	Telephone Number:
Fax Number: 305-278-7473	Fax Number:
Other:	Other:

Property Owner	Contractor
Name: ROUGET SANCHEZ	Company Name
Address: 13940 OLD CUTLER RD.	Qualifier
Home Telephone: 305-219-5966	License Number
Business Telephone:	Address
Other Telephone: 305.	Telephone Number
Fax Number:	Fax Number
Does Property have Homestead Exemption	**Phone Number for Pick Up** 3/219-5966

Bond Company (if applicable)	Mortgage Lender
Name:	Name:
Address:	Address:
City: State: Zip	City: State: Zip

Classification Of Proposed Work

Residential ☑ Duplex ☐ Townhouse ☐ Multi Family ☐ Commercial ☐ Industrial ☐ Other ☐

Effective Code_____ Occupancy_____ Construction Type _____

Zoning: E-1 Variance Number: Remarks:

OWNER AFFIDAVIT

Application is hereby made to obtain a permit to do the work and installation as indicated. I certify that no work or installation has commenced prior to the issuance of a permit and that all work will be performed to meet the standards of all laws regulating construction in this jurisdiction. I understand that a separate permit must be secured for **ELECTRICAL, MECHANICAL, PLUMBING, SIGNS, WELLS, POOLS, ROOFING, SHUTTERS, WINDOWS, FURNACES, BOILERS, HEATERS, TANKS, FENCE, DRIVEWAYS and AIR CONDITIONERS, ETC.** In addition to the requirements of this permit, there may be additional restrictions found in the Public Records, and there may be additional permits required from other governmental entities.

I, the owner of the property, have disclosed all information related to any work that has been performed in the prior twelve months to the Building Division as part of this application. Further, I am fully aware that if the cumulative cost of work to my home or business under this and any other permit equals or exceeds fifty percent of the fair market value of the structure, the entire structure must meet the present federal flood criteria for finished floor elevation. I am also fully aware that if the cost of work to my home or business under this and any other permit equals or exceeds fifty per cent of the replacement cost of the structure, then the entire structure must conform to current code requirements of the Florida Building Code.

I, the owner of the property, understand that a permit application is subject to denial and a validated permit or permit card is subject to revocation or modification based upon applicable deeds, covenants, declarations, easements and any other legal restriction. By issuing a permit, the Village of Palmetto Bay makes no representation as to the existence or validity of any property restriction.

I, the owner of the property certify that all the foregoing information is accurate and that all work will be done in compliance with all applicable laws regulating construction and zoning.

WARNING TO OWNER: YOUR FAILURE TO RECORD A NOTICE OF COMMENCEMENT MAY RESULT IN YOUR PAYING TWICE FOR IMPROVMENTS TO YOUR PROPERTY. A NOTICE OF COMMENCEMENT MUST BE RECORDED AND POSTED ON THE JOB SITE BEFORE THE FIRST INSPECTION. IF YOU INTEND TO OBTAIN FINANCING, CONSULT WITH YOUR LENDER OR AN ATTORNEY BEFORE COMMENCING WORK OR RECORDING YOUR NOTICE OF COMMENCEMENT.

Signature of Owner

State of Florida, County of

Sworn to (or affirmed) and subscribed before this 26 day of OCTOBER 20 19.
by (print name) ROUGET SANCHEZ

Notary Name KELSY LASCANO

Personally known ☑ or I.D.
Type of identification produced:

Notary Public State of Florida
Kelsy V Lascano
My Commission FF 227437
Expires 05/10/2019

Signature of Qualifier OWNER

State of Florida, County of

Sworn to (or affirmed) and subscribed before this 26 day of OCTOBER 20 19.
by (print name)

Notary Name KELSY LASCANO

Personally known or I.D.
Type of identification produced:

Notary Public State of Florida
Kelsy V Lascano
My Commission FF 227437
Expires 05/10/2019

IMPORTANT NOTICES

- Do not begin work without receiving you validated permit and permit card. Applying for a permit does not grant you the right to commence construction. Construction can only occur during the hours of 7:00 a.m. to 6:00 p.m., Monday thru Friday and from the hours of 9:00 a.m. to 5:00 p.m. on Saturdays. No construction activity is permitted on Sunday
- All construction sites must be maintained in a clean and orderly condition free from construction debris. Failure to do so will result in a fine and a suspension of inspections until said property is cleaned.
- Streets and neighboring properties shall be kept free from dirt and debris.
- Swales must be protected from damage by equipment or vehicles and sidewalks cannot be blocked.
- Portable Toilets for construction jobs require a separate permit. If toilet is not available the inspection will not be performed.
- Water cannot be discharged into the right of way or storm drains without the approval of the Public Works Department.
- No equipment or materials can be stored on the right of way; they must only be stored on your property.
- Florida Department of Health approval is required for applications involving Septic Tanks. Department of Environmental Resources Management (DERM) and /or Miami-Dade Water and Sewer Department approval is required for applications involving sewers and water. The tree section of the Department of Environmental Resources Management (DERM) approval is required on all landscape plans and on all tree removal applications.

FOR OFFICE USE ONLY

☐ OWNER-BUILDER FORM (Attached)

☐ FIRE DEPARTMENT APPROVAL (Commercial/multi (family only)

☐ CONCURRENCY (New Construction)

☐ PROOF OF OWNERSHIP (Attached)

☐ CONDO ASSOCIATION APPROVAL

☐ UPFRONT FEES AMOUNT: _____

☐ HEALTH DEPARTMENT APPROVAL (Septic/Sewer)

☐ IMPACT FEE (New Construction)

☐ SCHOOL REVIEW (New Construction)

☐ DERM REVIEW (New Construction/Additions/Tree Removal)

☐ PUBLIC WORKS

☐ PERMIT CLERK REVIEW
By: _____

- ☐ Complete Application
- ☐ Current liability ins.
- ☐ Worker's Comp.
- ☐ Cont. Lic. Check

☐ OTHER (Specify and Attach)

☐ FLORIDA DEPARTMENT OF BUISNESS AND PROFESSIONAL REGULATION APPROVAL (RESTAURANTS)

PERMIT FEES OFFICE ONLY

Scanning Fees Small (1.85 per sheet)		**Art in Public Places**	
Scanning Fees Large (3.50 per sheet)		**Certificate of Use and Occupancy**	
Village of Palmetto Bay Permit Fees		**Concurrency Fee** (7.35%)	
Miami-Dade County Fees (sq. ft. x $65//1000x0.60)		**Technology Fee** (6.3%)	
Flood Zone Review		**Zoning Inspection Fee** (157.50 per application)	
Radon-Inspector State Educational Fund and DCA State fee		**Administration Fee**	
Code Enforcement Fine		**Express Fee** (25.00)	
Certificate of Completion		**Public Works Fee**	
Construction Sign Fee		**Landscape Review Fee** (175.00 per hour)	
Roll-off Waste Container Fee (105.00 per container site)		**Special Review Fee** (89.25 per hour)	
Rework Fee		**Other**	

PLAN REVIEWER APPROVAL AREA (OFFICE USE ONLY)

SECTION	REVIEWER APPROVAL'S NAME	APPROVAL DATE	REJECTED DATE NUMBER 1	REJECTED DATE NUMBER 2	REJECTED DATE NUMBER 3
COMMUNITY DEVELOPMENT					
ZONING					
ELECTRICAL					
MECHANICAL					
PLUMBING					
FIRE					
ROOFING					
PUBLIC WORKS					
PLANNING					
STRUCTURAL					
BUILDING					
BUILDING OFFICIAL					

REWORKS: A fee of **$105.50** may be charged for failure to make required corrections previously indicated. The fee shall be charged after the initial review plus one follow up review per trade. Please note that Florida Statutes 553.80 section 2(b) states "with respect to evaluation of design professionals documents, if a local government finds it necessary, in order to enforce compliance with the Florida Building Code and issue a permit, to reject design documents required by the code three or more times for failure to correct a code violation specifically noted in each rejection, including but not limited to egress, fire protection, structural stability, energy, accessibility, lighting, ventilation, electrical, mechanical, plumbing, and gas systems, or other requirements identified by rule of the Florida Building Commission adopted pursuant to Chapter 120, the local government shall impose, each time after third such review the plans are rejected for that code violation a fee of **four times the amount** of the proportion of the permit fee attributed to plans review".

FINAL PLAN REVIEWED AND PREPARED FOR ISSUANCE BY: _____ DATE: _____

Plans Checked out	Date	Clerk	Plans Checked in	Date	Clerk

Village of Palmetto Bay Permit Application

Department of Building & Capital Projects
9705 E. Hibiscus Street
Palmetto Bay, Florida 33157
Phone: (305) 259-1250 Fax: (866) 927-5576 Inspections: (305) 259-1253

GENERAL INFORMATION: Please read these instructions carefully before submitting the work for review

This application must be completed and signed by both the property owner and qualifier. Both of these signatures must be notarized. Please print legibly or type in order not to delay your application. For roofing permits, in addition to this permit you must also fill out a roofing permit application. Express permits require an additional fee and will only be accepted between the hours of 8:00 A.M. and 10:00 A.M., Monday through Friday. All other permits/plans must be dropped off before 4:30 p.m. for regular processing. During the processing of your application you may be asked to submit additional information. There may be additional permits and reviews required from other governmental agencies not affiliated with Palmetto Bay.

APPLICATION:

Clerk's Initials	Plan Process Number	Master Permit Number	Subsidiary Permit Number(s)	Expiration Date
	Bld-2015-7898			

Job Address: 13940 OLD CUTTLER ROAD. PALMETTO BAY, FL.
Address | Unit number | City | State | Zip Code

Folio Number: 33-5023-002-0200

Lot: 2 Block: 3

Subdivision: FARMER'S ACRES PB: 50 PG: 65

Current Use of Property:

Proposed Use of Property: New Single family

Description of Work: NEW SINGLE FAMILY RES.

Zoning: E-1 Square Feet: 6,600 ft

Tenant Information: Unit Number:

Linear Feet: Units: Stories:

Value of Proposed Work: 700,000 Est. Bldg. Value:

Tax Assessed Value:

Flood Zone: Base Floor Elev.:

Homeowner's Association:

I affirm that there ☐ are or ☐ are no restrictive covenants associated with the underlying property that would affect the pending application. Failure to disclose this information shall result in the immediate revocation of any type of permit or certificate of use/occupancy.

Check Permit Type		Check Permit Change		Check Type of Improvement			
Building	✓	Change of Contractor		New Construction	✓	Deck/Concrete flatwork	
Electrical		Permit Renewal		Exterior Alteration		Window Replacement	
Mechanical		Plan Revision		Interior Alteration		Shutters	
Plumbing		Permit Extension		Attached Addition		Garage Doors	
LPGX		Supplement		Detached Addition		Storage Shed	
Roofing		Re-inspection Fee		Repair		Railings	
Fence				Repair due to Fire		Stairs	
Sign				Demolish		Windows/Doors	
Public Works				Screen Enclosure		Roofing	
Other				Driveway		Re-Roof	
				Fence		Seal-cote	
				Pool		Other	

Architect Information	Engineer Information
Name: LEOPOLDO BELLON	Name:
License Number: AIA (AR-8737)	License Number:
Address: 13131 SW 132 ST. SUITE 104.	Address:
Telephone Number: 305 790 2626.	Telephone Number:
Fax Number: 305-278-7473.	Fax Number:
Other:	Other:

Property Owner	Contractor
Name: ROUGET SANCHEZ	Company Name
Address: 13940 OLD CUTLER RD.	Qualifier
Home Telephone: 305.219.5966	License Number
Business Telephone:	Address
Other Telephone: 305.	Telephone Number
Fax Number:	Fax Number
Does Property have Homestead Exemption	**Phone Number for Pick Up** 3/219-5966

Bond Company (if applicable)	Mortgage Lender
Name:	Name:
Address:	Address:
City: State: Zip	City: State: Zip

Classification Of Proposed Work		
Residential ☑ Duplex ☐ Townhouse ☐ Multi Family ☐ Commercial ☐ Industrial ☐ Other ☐		
Effective Code	Occupancy	Construction Type
Zoning: E-1	Variance Number:	Remarks:

OWNER AFFIDAVIT

Application is hereby made to obtain a permit to do the work and installation as indicated. I certify that no work or installation has commenced prior to the issuance of a permit and that all work will be performed to meet the standards of all laws regulating construction in this jurisdiction. I understand that a separate permit must be secured for ELECTRICAL, MECHANICAL, PLUMBING, SIGNS, WELLS, POOLS, ROOFING, SHUTTERS, **WINDOWS, FURNACES, BOILERS, HEATERS, TANKS, FENCE, DRIVEWAYS and AIR CONDITIONERS, ETC.** In addition to the requirements of this permit, there may be additional restrictions found in the Public Records, and there may be additional permits required from other governmental entities.

I, the owner of the property, have disclosed all information related to any work that has been performed in the prior twelve months to the Building Division as part of this application. Further, I am fully aware that if the cumulative cost of work to my home or business under this and any other permit equals or exceeds fifty percent of the fair market value of the structure, the entire structure must meet the present federal flood criteria for finished floor elevation. I am also fully aware that if the cost of work to my home or business under this and any other permit equals or exceeds fifty per cent of the replacement cost of the structure, then the entire structure must conform to current code requirements of the Florida Building Code.

I, the owner of the property, understand that a permit application is subject to denial and a validated permit or permit card is subject to revocation or modification based upon applicable deeds, covenants, declarations, easements and any other legal restriction. By issuing a permit, the Village of Palmetto Bay makes no representation as to the existence or validity of any property restriction.

I, the owner of the property certify that all the foregoing information is accurate and that all work will be done in compliance with all applicable laws regulating construction and zoning.

WARNING TO OWNER: YOUR FAILURE TO RECORD A NOTICE OF COMMENCEMENT MAY RESULT IN YOUR PAYING TWICE FOR IMPROVMENTS TO YOUR PROPERTY. A NOTICE OF COMMENCEMENT MUST BE RECORDED AND POSTED ON THE JOB SITE BEFORE THE FIRST INSPECTION. IF YOU INTEND TO OBTAIN FINANCING, CONSULT WITH YOUR LENDER OR AN ATTORNEY BEFORE COMMENCING WORK OR RECORDING YOUR NOTICE OF COMMENCEMENT.

Signature of Owner

State of Florida, County of

Sworn to (or affirmed) and subscribed before this 26 day of OCTOBER, 20 19.
by (print name) ROUGET SANCHEZ

Notary Name KELSY LASCANO

Personally known ☑ or I.D.
Type of identification produced

Notary Public State of Florida
Kelsy V Lascano
My Commission FF 227437
Expires 05/10/2019

Signature of Qualifier OWNER

State of Florida, County of

Sworn to (or affirmed) and subscribed before this 26 day of OCTOBER, 20 19.
by (print name)

Notary Name KELSY LASCANO

Personally known or I.D.
Type of identification produced:

Notary Public State of Florida
Kelsy V Lascano
My Commission FF 227437
Expires 05/10/2019

IMPORTANT NOTICES

- Do not begin work without receiving you validated permit and permit card. Applying for a permit does not grant you the right to commence construction. Construction can only occur during the hours of 7:00 a.m. to 6:00 p.m., Monday thru Friday and from the hours of 9:00 a.m. to 5:00 p.m. on Saturdays. No construction activity is permitted on Sunday
- All construction sites must be maintained in a clean and orderly condition free from construction debris. Failure to do so will result in a fine and a suspension of inspections until said property is cleaned.
- Streets and neighboring properties shall be kept free from dirt and debris.
- Swales must be protected from damage by equipment or vehicles and sidewalks cannot be blocked.
- Portable Toilets for construction jobs require a separate permit. If toilet is not available the inspection will not be performed.
- Water cannot be discharged into the right of way or storm drains without the approval of the Public Works Department.
- No equipment or materials can be stored on the right of way; they must only be stored on your property.
- Florida Department of Health approval is required for applications involving Septic Tanks. Department of Environmental Resources Management (DERM) and /or Miami-Dade Water and Sewer Department approval is required for applications involving sewers and water. The tree section of the Department of Environmental Resources Management (DERM) approval is required on all landscape plans and on all tree removal applications.

CHECKLIST (OFFICE USE ONLY)

☐ OWNER-BUILDER FORM (Attached)

☐ FIRE DEPARTMENT APPROVAL (Commercial/multi (family only)

☐ CONCURRENCY (New Construction)

☐ PROOF OF OWNERSHIP (Attached)

☐ CONDO ASSOCIATION APPROVAL

☐ HEALTH DEPARTMENT APPROVAL (Septic/Sewer)

☐ IMPACT FEE (New Construction)

☐ SCHOOL REVIEW (New Construction)

☐ DERM REVIEW (New Construction/Additions/Tree Removal)

☐ PUBLIC WORKS

☒ PERMIT CLERK REVIEW
By: _____

- ☒ Complete Application
- ☒ Current liability ins.
- ☒ Worker's Comp.
- ☒ Cont. Lic. Check

☐ OTHER (Specify and Attach)

☐ FLORIDA DEPARTMENT OF BUISNESS AND PROFESSIONAL REGULATION APPROVAL (RESTAURANTS)

☒ UPFRONT FEES AMOUNT: 115.00 Paid 10/26/15

PERMIT FEES (OFFICE USE ONLY)

Scanning Fees Small (1.85 per sheet)		**Art in Public Places**	
Scanning Fees Large (3.50 per sheet)		**Certificate of Use and Occupancy**	
Village of Palmetto Bay Permit Fees	13706.76	**oncurrency Fee** (7.35%)	
Miami-Dade County Fees (sq. ft. x $65//1000x0.60)	217.80	**Technology Fee** (6.3%)	
Flood Zone Review	100.00	**Zoning Inspection Fee** (157.50 per application)	50.00
Radon-Inspector State Educational Fund and DCA State fee	220.74 220.74	**Administration Fee**	50.00
Code Enforcement Fine		**Express Fee** (25.00)	
Certificate of Completion	70.00	**Public Works Fee**	210.00
Construction Sign Fee		**Landscape Review Fee** (175.00 per hour)	25.00
Roll-off Waste Container Fee (105.00 per container site)		**Special Review Fee** (89.25 per hour) Bldg	89.25
Rework Fee 3	595.00	**Other**	

$15,485.29

PLAN REVIEWER APPROVAL AREA (OFFICE USE ONLY)

SECTION	REVIEWER APPROVAL'S NAME	APPROVAL DATE	REJECTED DATE NUMBER 1	REJECTED DATE NUMBER 2	REJECTED DATE NUMBER 3
COMMUNITY DEVELOPMENT					
ZONING	MN	4/28/16	MN 10/20/15	MN 1/20/16	
ELECTRICAL	1.25.16				
MECHANICAL	11.13.15				
PLUMBING		4/15/16	10/29/15	1/25/16	3/8/16
FIRE					
ROOFING					
PUBLIC WORKS	DC	4/25/16	DC 2/9/16	DC 3/7/16	
PLANNING					
STRUCTURAL			11/24/2015	3/8/16	
BUILDING		5/3/16	12/8/15	3/2/16	5/2/16
BUILDING OFFICIAL					

REWORKS: A fee of **$105.50** may be charged for failure to make required corrections previously indicated. The fee shall be charged after the initial review plus one follow up review per trade. Please note that Florida Statutes 553.80 section 2(b) states "with respect to evaluation of design professionals documents, if a local government finds it necessary, in order to enforce compliance with the Florida Building Code and issue a permit, to reject design documents required by the code three or more times for failure to correct a code violation specifically noted in each rejection, including but not limited to egress, fire protection, structural stability, energy, accessibility, lighting, ventilation, electrical, mechanical, plumbing, and gas systems, or other requirements identified by rule of the Florida Building Commission adopted pursuant to Chapter 120, the local government shall impose, each time after third such review the plans are rejected for that code violation a fee of **four times the amount** of the proportion of the permit fee attributed to plans review".

ISSUING OFFICIAL

FINAL PLAN REVIEWED AND PREPARED FOR ISSUANCE BY: _____ DATE: 5/3/16

CONDITIONS OF APPROVAL

SEE attached Approval conditions. DC

PLAN TRACKING

Plans Checked out	Date	Clerk	Plans Checked in	Date	Clerk
X Rowley Spicer	12.14.15				
X Rowley Spicer	4/14/16				

Department of Building & Capital Projects
9705 E Hibiscus Street
Palmetto Bay, Florida 33157
Tel: 305-259-1250
www.palmettobay-fl.gov

OWNER-BUILDER AFFIDAVIT

You have made application for a Building Permit as an Owner-Builder. State law requires construction to be done by licensed contractors. You have applied for a permit under an exemption to that law. Please be advised of the following provisions and requirements.

RESPONSILBILITY: The exemption for which you have applied allows you, as the owner of your property, to act as your own contractor even though you do not have a license. You must supervise the construction yourself. You may build or improve a one-family or two-family residence of a farm outbuilding. You may also build or improve a commercial building at a cost of $25, 0000 or less. The building must be for your own use and occupancy; it may not be built it for sale or lease, which is a violation of this exemption. **You may not hire an unlicensed person as you contractor**. Your construction must be done according to building codes and zoning regulations. It is your responsibility to make sure that people employed by you have licenses required by state law and by county or municipal licensing ordinances.

INSURANCE: Most regular home insurance policies do not cover any damage to persons or property resulting form work of this nature. Your are advised to investigate your liability.

WITHHOLDING TAXES, ETC.: You are advised to investigate your responsibility for withholding Social Security, Federal, and State Unemployment Insurance Taxes, as well as Federal Income taxes from the wages of persons employed by you on this construction, and for making returns thereof to the proper agencies.

APPROVED PLANS: The Building Official shall retain one set of the approved plans and the other set shall be kept at the building site, open to inspection by the Building Official, at all reasonable times. The Building Official may stop work, if such plans are not available at the building site. **THE BUILDING PERMIT AND THIS NOTICE MUST BE POSTED AT THE JOB SITE.**

NOTICE OF COMMENCEMENT: If the improvements cost more than $2,500, you must file a Notice of Commencement before beginning the project. This department can provide the form. You must record the form at the Miami-Dade County Recording Department, 22 NW First Street, Miami, Florida and Room
Failure to record a Notice of Commencement or incorrect information on the Notice of Commencement could contribute to having to pay twice for the same work or materials. It could also prevent the property from passing code inspection.

INSPECTIONS: You will be responsible as Owner-Builder to see that all inspections are called for; you are not to continue work until each inspection has been approved.

ACKNOWLEDGEMENT: I hereby swear and affirm that I am the owner of the property described as:

LOT _____ BLOCK _____ SUBDIVISION _____

ADDRESS _____

I have read the foregoing instructions and am aware of my responsibilities.

_____ 10.26.15
Signature Date Signed

STATE OF FLORIDA)
COUNTY OF MIAMI-DADE)
Sworn to and subscribed before me this 26 day of Oct, 20 15.

Notary Public
ANGELINA HEWLETT
MY COMMISSION # FF 08705
EXPIRES: June 26, 2017
Bonded Thru Notary Public Underwriters

S522-280-67417-0

Sanchez Arango
CONSTRUCTION

Sanchez Residence
13940 Old Cutler Road, Palmetto Bay, Fl 33166

5/6/2016

DESCRIPTION		TOTAL
SHELL	$	122,000
PLUMBING	$	11,500
MECHANICAL:	$	22,979
ELECTRICAL WORK:	$	18,500
	$	174,979

ADD BACK IN
CABINETS 125,00
FINISH CARPENTRY 35,6
FINISHES 151,379

487,026
Remove CABINETS − 125,000

362,026
× .04 4% fee

14,481.04

487,026 × 4% = $19,481.04
IF CABINETS REMOVED
487,026 − 125,000 = 362,026
362,026 × 4% = 14,481.04
15485 − 9826 = 5659
200,000 + misc 9826%

$15,485.29

8651 NW 70th Street
Miami, FL 33166
Tel. (305) 592-9252
Fax. (305) 592-9204
www.sanchezarango.com
CGC-057471

Sanchez Arango
CONSTRUCTION

05-09-16
PLDG DIV

Sanchez Residence
13940 Old Cutler Road, Palmetto Bay, Fl 33166

5/6/2016

DESCRIPTION	TOTAL
SITEWORK: Septic Tank	$ 24,000
SHELL	$ 122,000
METALS:	$ 11,500
CABINETS:	$ 125,000
FINISH CARPENTRY:	$ 35,668
THERMAL & ROOFING	$ 41,724
DOORS AND WINDOWS	$ 77,400
FINISHES:	$ 151,379
PLUMBING	$ 11,500
MECHANICAL:	$ 22,979
ELECTRICAL WORK:	$ 18,500
KITCHEN EQUIPMENT:	$ 58,351
	$ 700,000

SA

8651 NW 70th Street
Miami, FL 33166
Tel. (305) 592-9252
Fax. (305) 592-9204
www.sanchezarango.c
CGC-057471

BUILDING 5-2-16

ORESTES R. GARCIA
BLD2016-7898
13940 Old Cutler Road

COMMENTS

ALL REVISIONS MUST BE CLEARLY MARKED, MECHANICALLY REPRODUCED, SIGNED, SEALED AND DATED BY PROFESSIONAL OF RECORD. NO HAND WRITTEN MODIFICATIONS WILL BE ACCEPTED. VOIDED SHEETS MUST BE MARKED VOID AND RETURNED WITH REVISED SHEETS.
PROVIDE NARRATIVE INCLUDING LOCATION OF REVISIONS FOR EA. COMMENT.

ALL PREVIOUS COMMENTS FROM 12-8-16 & 3-2-16 REVIEWS WITH THE EXEPTION OF COMMENT No. 9 HAVE BEEN ADRESSED PROPERLY BY THE DESIGN PROFESIONAL.

1. Please address 8"x 8" concrete cap shown on sections "B" & "D" on sheets A-4 & A-5 above windows.
   No reinforcement or heights shown. If it's going to be a precast lintel please specify as such and call out for edge tie-in to vertical reinforcement.

VILLAGE OF PALMETTO BAY
Building Permit

Permit No.: **BLD-2015-7898**

Issue Date

Expiration Date: **10/30/2016**

Inspection Requests Require 24 Hour Notice
(305) 259-1253

Permit Type: **NEW CONSTRUCTION RESIDENTIAL 1 OR 2 STORY**

Site Address: 13940 OLD CUTLER RD
PALMETTO BAY FL 33158

Owner: JEMARIE SANCHEZ
Address: 13940 OLD CUTLER RD
PALMETTO BAY FL 33158

Phone:
Fax:

Contractor: SANCHEZ ARANGO CONSTRUCTION
Address: 8651 NW 70TH ST
DORAL FL 33166

Phone: (305) 592-9252
Fax: (305) 592-9204

Business Lic#: CGC057471

Contact: ROUGET SANCHEZ

Phone: (305) 592-9252

Description:

SUPPLEMENTAL INFORMATION:

RESIDENTIAL/COMMERCI.	RESIDENTIAL	# OF WASTE CONTAINER	0
CHARGE UP FRONT FEE?	Y	CHARGE FS DBPR FBC?	Y
ESTIMATED COST VALUE	700000	CHARGE FS DCA FBC?	Y
CHARGE ESTIMATED COST VA	Y		
# OF HOURS (SPECIAL REVIEV	1		
# OF LANDSCAPE HOURS	0		
# OF TRADES	0		
# OF SQ FT ZONING REVIEW	7383		
# OF RE-WORK	3		
NUMBER OF STORIES	ONE STORY		
# OF SQ FT	7383		
# OF SMALL PAGES	0		
# OF LARGE PAGES	0		

FEES:

UPFRONT FEE REQUIRED FOR PE	115.00	ZONING INSPECTION FEE	50.00
ZONING FLOOD REVIEW	100.00	LANDSCAPE REVIEW	25.00
ZONING MIN REVIEW	50.00	PW REVIEW EXCEPT PAVING & DF	210.00
CONST/ADDIT 501-1000 sqft	26,617.94	C.O./COMPLETION FEE	70.00
RE-WORK PER TRADE	525.00	CODE COMPLIANCE	420.00
FLORIDA STATUS FS468.631 DBPR	423.53	SPECIAL REVIEW	89.25
FLORIDA STATUS FS553.721 DCA	423.53		

TOTAL FEES: **29,119.25**

Department of Building & Capital Projects
Comment Sheet

Department: Building

Inspector: O. Garcia

Process Number: BLD 2015-7898
13940 OLD CUT. Rd.

Date: 12/8/15

1.) Need DERM & HRS APPROVAL
2.) Need Demolition permit for existing Structures, Septic tank, Pool etc.
3.) Provide Flood criteria notes
4.) Clarify method of rain water disposal converging from covered terrace & Great room roofs. Note that garage floor is the lowest level.
5.) Show electric & water on site plan
6.) Electric Panel "B" Calls out for irrigation pump. Show location & proposed irrigation well.
7.) Provide special inspector form for Soil/Fill Compaction, Reinforced masonry, Truss installation & Bracing
8.) Please address summer kitchen equipment. Is BBQ gas? Need detail of exhaust hood dotted in on floor plan. Electrical?
9.) 8"x8" conc. cap shown over window openings must be addressed structurally
10) Architectural wall sections on A-4 & A-5 show regular overhangs but typical wall section on A-6 shows a cant called out as an overhang. Please clarify
11.) Soffit must have plywood under lath & stucco when 24" or more.
12) overhangs shown on sections on S-3 do not match those on A-6
13.) Roof slope 6:12 on sheet A-2 & A-3 & 7:12 on A-6.
14.) 5/8" Drywall is not for exterior ceilings. Please revise sections

Department of Building & Capital Projects
Comment Sheet

Department: _____

Inspector: _____

Process Number: _____

Date: _____

15). Describe Components of metal roof. on typ. section
16.) specify on window & door schedules Glass specs required on energy calcs.
17.) Please provide Narrative addressing all comments & the location of revisions

CITY OF PALMETTO BAY

1. Need DERM and HRS approval
RESPONSE: See stamp approval.

2. Need demolition permit for existing structures, septic tank, pool, etc.
RESPONSE: See approval demolition permit.

3. Provide Flood criteria notes
RESPONSE: Please see sheet SP-1 (Cloud # 1).

4. Clarify method of rain water disposal converging from covered terrace and great room roofs. Note that the garage floor is the lowest level.
RESPONSE: Please see sheet A-4, and see Overhand / Gutter detail. (CLOUD # 1).

5. Show electric and water on site plan.
RESPONSE: Please see sheet SP-1 (CLOUD # 1).

6. Electric panel ?B? calls out for irrigation pump. Show location and proposed irrigation well.
RESPONSE: Irrigation pump removed from plans. See sheet E-2.

7. Provide special inspector from for soil/fill compaction reinforced masonry, truss installation and bracing.
RESPONSE: Please see attached form.

8. Please address summer kitchen equipment. Is BBQ gas? Need details of exhaust hood dotted in on floor plan. Electrical?
RESPONSE: Please see sheet E-1, and see Cook Hood Exhaust Riser detail and see Sheet E-2. (Cloud # 1).

9. 8?x8? conc. Cap shown A-5 over A-4 window openings must address structurally. SEC. "D" & "B" NO 8"X8" ON BEAM SCHEDULE ON S-5
RESPONSE: Please see sheet A-5

10. Architectural wall sections on A-4 and A-5 show regular overhangs, but typical wall section on A-6 shows a cant called out as an overhang. Please clarify.
RESPONSE: Please see sheet A-6 (CLOUD # 1)

83-76

11. Soffit must have plywood under lath and stucco when 24? or more
RESPONSE: Please see sheet A-4, A-5, A-6.

12. Overhangs shown on sections on s-3 do not match those on A-6
RESPONSE: Please see sheet A-6.

13. Roof slope 6112 on sheet A-2 and A-3 and 7:12 on A6
RESPONSE: Please see sheet A-6.

14. 5/8? drywall is not for exterior ceilings. Please revise sections
RESPONSE: Please see sheet A-4 Section B, and Sheet A-5 Section C.

15. Describe components of metal roof on typ. Section
RESPONSE: Please see note sheet A-6

16. Specify on window and door schedules glass specs required on energy calcs.
RESPONSE: Please see sheet A-2, A-3.

17. Please provide narrative addressing all comments and the location of revisions.

CITY OF PALMETTO BAY

1. Need DERM and HRS approval
RESPONSE: See stamp approval.

2. Need demolition permit for existing structures, septic tank, pool, etc.
RESPONSE: See approval demolition permit.
3. Provide Flood criteria notes
RESPONSE: Please see sheet SP-1 (Cloud # 1).

4. Clarify method of rain water disposal converging from covered terrace and great room roofs. Note that the garage floor is the lowest level.
RESPONSE: Please see sheet A-4, and see Overhand / Gutter detail. (CLOUD # 1).

5. Show electric and water on site plan.
RESPONSE: Please see sheet SP-1 (CLOUD # 1).

6. Electric panel ?B? calls out for irrigation pump. Show location and proposed irrigation well.
RESPONSE: Irrigation pump removed from plans. See sheet E-2.

7. Provide special inspector from for soil/fill compaction reinforced masonry, truss installation and bracing.
RESPONSE: Please see attached form.

8. Please address summer kitchen equipment. Is BBQ gas? Need details of exhaust hood dotted in on floor plan. Electrical?
RESPONSE: Please see sheet E-1, and see Cook Hood Exhaust Riser detail and see Sheet E-2. (Cloud # 1).

9. 8?x8? conc. Cap shown over window openings must address structurally.
RESPONSE: Please see sheet A-5

10. Architectural wall sections on A-4 and A-5 show regular overhangs, but typical wall section on A-6 shows a cant called out as an overhang. Please clarify.
RESPONSE: Please see sheet A-6 (CLOUD # 1)

8376

11. Soffit must have plywood under lath and stucco when 24? or more
RESPONSE: Please see sheet A-4, A-5, A-6.

12. Overhangs shown on sections on s-3 do not match those on A-6
RESPONSE: Please see sheet A-6.

13. Roof slope 6112 on sheet A-2 and A-3 and 7:12 on A6
RESPONSE: Please see sheet A-6.

14. 5/8? drywall is not for exterior ceilings. Please revise sections
RESPONSE: Please see sheet A-4 Section B, and Sheet A-5 Section C.

15. Describe components of metal roof on typ. Section
RESPONSE: Please see note sheet A-6

16. Specify on window and door schedules glass specs required on energy calcs.
RESPONSE: Please see sheet A-2, A-3.
17. Please provide narrative addressing all comments and the location of revisions.

Department of Building & Capital Projects
Comment Sheet

Department: Building

Inspector: O. Garcia

Process Number: BLD 2015-7898
13940 O.C. Rd.

Date: 3/2/16

1.) Second Review

Need Narrative addressing all comments including the location of the revisions for 12/8/15 Review

Department of Public Works
Planning and Zoning Comment Sheet

Project: New Single Family Residence

Permit No: BLD-2015-7898

Project Site: 13940 OLD CUTLER RD

Reviewer: Danny Casals

Date: April 25, 2016

Approval Conditions:

1. Miami Dade County Permit needed for Driveway Approach on Old Cutler Rd.
2. Property owner must enter into a Covenant for Maintenance of Landscaping within Right of Way Agreement with Miami Dade County Public Works.
3. Miami Dade County Permit needed for work within Old Cutler Rd. Right of Way.

Standard Comments:

1. The Public Works Department reserves the right to add or modify requirements based upon any additional information that may be received during and after this review process.

Department of Building & Capital Projects
Comment Sheet

Department: Structural

Inspector: Mustafa Cankat

Process Number: BLD 2015-7898

Date: 03/08/2016

1) ALL PREVIOUS COMMENTS DATED NOVEMBER 24, 2015 ARE STILL OUTSTANDING (SEE ATTACHED)

2) RESPOND IN WRITING, PROVIDE A NARRATIVE.

November 24, 2015
Village of Palmetto Bay
Building Division

Structural Comment Sheet by Mustafa Cankat, PE.

Permit No: BLD 2015-7898
Address: 13940 Old Cutler Rd.
New SFR

Comments

1) Governing Building Code is Florida Building Code 2014, 5th Edition/High Velocity Hurricane Zone sections.
2) Update ACI & Masonry code references to latest revision dates as per FBC 2014.
3) F6.5 and F 7.0 are not in the footing schedule.
4) Show F4x6 and F7x12.5 on foundation plan. If they are not used delete from the footing schedule.
5) Indicate number of plies for girder trusses on framing plans.
6) Some girder trusses are supported at very close to the corner of the walls. Locate the center of the connection from the corner (provide distance dimension) Check the edge distance of the bolts, if required revise the typical connection detail.
7) Provide wind design pressures for the windows and doors and post them on Architectural elevations. VERIFY
8) Truss connectors should have adequate strength for combined uplift and lateral forces.
   Provide calculation that typical truss with longest span have adequate fastener capacity for combined loads and satisfy the unity equation.
9) Please provide a narrative describing the revisions is made.

Village of Palmetto Bay
9705 East Hibiscus Street
Palmetto Bay, Florida 33157
Phone: (305) 259-1271

DECLARATION OF USE

In consideration of the issuance of a covenant, as hereinafter described, as Owner(s) of the property herein legally described, hereby agree and bind myself, or ourselves, and my, or our, heirs, successors and assigns as follows: ROUGET SANCHEZ.

The property herein described shall be used for single family residence only; the plans submitted for said permits are designated and intended for such use only process numbers BID-2015-7898.

On Lot _____ Block _____ of _____ Plat Book _____, Page _____, of the public Records of Miami-Dade County, Florida.

Also known as (Address): 13940 OLD CUTLER ROAD. PALMETTO BAY, FL 3
Miami Dade County, Florida

This agreement is hereby made and accepted as a condition of the issuance of a building permit for:

It is further understood and agreed that the execution of this covenant acknowledgement puts the property owner on notice of the requirements related above.

City Inspection: As further part of this agreement, it is hereby understood and agreed that any official of the Village of Palmetto Bay or its agents duly authorized, may have the privilege at any time during normal working hours of entering and investigating the use of the premises, to determine whether or not the requirements of the Planing and Zoning Regulations and the conditions herein agreed to are being complied with.

Enforcement: Enforcement shall be by action again and any parties or person violating, or attempting to violate the approved use. The Village may enact an enforcement proceeding against the property owner pursuant to section 2-205 of the Village's Code, and pursuant to the requirements of the Village's Code of Ordinances, and may result in a notice of civil citation of up to $500.00 for a first offense. This enforcement provision shall be in addition to any other remedies available at law or in equity or both.

Witnesses:

Signature	Affiant's signature
Print Name	ROUGET SANCHEZ Print Name Husband
Signature	Affiant's signature
Print Name	Print Name Wife

Sworn to and subscribed before me on the 8th day of April, 2010, Affiant is personal know to me or has produced Drivers License. as identification.

Notary Public State of

My Commission Expires:

ANGELINA HEWLETT
MY COMMISSION # FF 031765
EXPIRES: June 26, 2017
Bonded Thru Notary Public Underwriters

COVENANT FOR MAINTENANCE OF LANDSCAPING AND IRRIGATION WITHIN RIGHT OF WAY

WHEREAS, ROUGET SANCHEZ
hereinafter referred to as the OWNER(s) of the following legally described property:
13940 OLD CUTLER ROAD
PALMETTO BAY, FL 33158

Request(s) permission to maintain ~~(3) MAHOGANY~~ HID
within the public right of way.
(Please provide the type and number of trees to be planted, as well as irrigation system description, if applicable)

Public Works Field Staff Approval Date

IN CONSIDERATION of the approval of this permit by the Village of Palmetto Bay Public Works Department, the Owner(s) agree(s) as follows:

1. To maintain and replace, where necessary, the above-mentioned items including sod and/or any irrigation equipment, installed within the dedicated right of way. If it becomes necessary to for the Village to maintain said items within the public right of way (including, without limitation, restoration of streets) by reason of the Owner's failure to do so, much expense shall be paid by the Owner or shall constitute a lien against the above- described property until paid.

2. The undersigned further agree(s) that these conditions shall be deemed a covenant running with the land in favor of the Village of Palmetto Bay and shall remain in full force and effect and be binding on the undersigned, his/their heirs and assigns, until such time as this obligation has been cancelled by an affidavit filed in the Public Records of the Village of Palmetto Bay, Florida by the Director of the Public Works Department (or his fully authorized representative).

Signed, sealed, executed and acknowledged on 8th day of April, 2016,
at Palmetto Bay, Florida
Signed, sealed and delivered in the presence of:

Owner of Property:

Signature

ROUGET SANCHEZ
Print Name

Address (if different from above)

(305) 219-5966
Telephone No.

Notary:

ANGELINA HEWLETT
MY COMMISSION # FF 031765
EXPIRES: June 26, 2017
Bonded Thru Notary Public Underwriters

Signature

Angelina Hewlett
Print Name

Public Works Director Date

Department of Public Works
Planning and Zoning Comment Sheet

Project: New Single Family Residence

Permit No: BLD-2015-7898

Project Site: 13940 OLD CUTLER RD

Reviewer: Danny Casals

Date: February 9, 2016

Comments:

1. Provide DERM approval.
2. Provide WASD Water Verification Letter.
3. Provide Dept. of Health Approval.
4. Miami Dade County Permit needed for Driveway.
5. Property owner must enter into a Covenant for Maintenance of Landscaping within Right of Way Agreement with Miami Dade County Public Works.

Standard Comments:

1. The Public Works Department reserves the right to add or modify requirements based upon any additional information that may be received during and after this review process.

NOTICE OF COMMENCEMENT

A RECORDED COPY MUST BE POSTED ON THE JOB SITE AT TIME OF FIRST INSPECTION

PERMIT NO._____TAX FOLIO NO._____

STATE OF FLORIDA:
COUNTY OF MIAMI-DADE:

THE UNDERSIGNED hereby gives notice that improvements will be made to certain real property, and in accordance with Chapter 713, Florida Statutes, the following information is provided in this Notice of Commencement.

Space above reserved for use of recording office

1. Legal description of property and street/address: _____

2. Description of improvement: _____

3. Owner(s) name and address: _____
Interest in property: _____
Name and address of fee simple titleholder: _____
4. Contractor's name, address and phone number: _____

5. Surety: (Payment bond required by owner from contractor, if any)
Name, address and phone number: _____
Amount of bond $_____
6. Lender's name and address: _____
7. Persons within the State of Florida designated by Owner upon whom notices or other documents may be served as provided by Section 713.13(1)(a)7., Florida Statutes,
Name, address and phone number: _____

8. In addition to himself, Owners designates the following person(s) to receive a copy of the Lienor's Notice as provided in Section 713.13(1)(b), Florida Statutes.
Name, address and phone number: _____

9. Expiration date of this Notice of Commencement: _____
(the expiration date is 1 year from the date of recording unless a different date is specified)

WARNING TO OWNER: ANY PAYMENTS MADE BY THE OWNER AFTER THE EXPIRATION OF THE NOTICE OF COMMENCEMENT ARE CONSIDERED IMPROPER PAYMENTS UNDER CHAPTER 713, PART I, SECTION 713.13, FLORIDA STATUTES, AND CAN RESULT IN YOUR PAYING TWICE FOR IMPROVEMENTS TO YOUR PROPERTY. A NOTICE OF COMMENCEMENT MUST BE RECORDED AND POSTED ON THE JOB SITE BEFORE THE FIRST INSPECTION. IF YOU INTEND TO OBTAIN FINANCING, CONSULT WITH YOUR LENDER OR AN ATTORNEY BEFORE COMMENCING WORK OR RECORDING YOUR NOTICE OF COMMENCEMENT.

Signature(s) of Owner(s) or Owner(s)' Authorized Officer/Director/Partner/Manager

Prepared By _____ Prepared By _____
Print Name _____ Print Name _____
Title/Office _____ Title/Office _____

STATE OF FLORIDA
COUNTY OF MIAMI-DADE
The foregoing instrument was acknowledged before me this _____ day of _____. _____
By _____
☐ Individually, or ☐ as _____ for _____
☐ Personally known, or ☐ produced the following type of identification: _____
Signature of Notary Public: _____
Print Name: _____
(SEAL)

VERIFICATION PURSUANT TO SECTION 92.525, FLORIDA STATUTES
Under penalties of perjury, I declare that I have read the foregoing and that the facts stated in it are true, to the best of my knowledge and belief.

Signature(s) of Owner(s) or Owner(s)'s Authorized Officer/Director/Partner/Manager who signed above:

By _____ By _____

EXPRESS PERMITS FEE

I understand that an additional fee of $ 25.00 (per-review) will be applied to my permit at final fee.

Authorization: **Date:**

EXPEDITED PLAN REVIEW

I understand that an additional fee of $89.25 (per trade, per review) will be applied to a rush review for permits with plans. (For example: New Construction, Additions, and Remodeling & Revision to plans.

Authorization: **Date:** 4-11-16

Armando Fomeo
786-362-1611

Department of Public Works
Planning and Zoning Comment Sheet

Project: New Single Family Residence

Permit No: BLD-2015-7898

Project Site: 13940 OLD CUTLER RD

Reviewer: Danny Casals

Date: March 7, 2016

Comments:

1. Provide DERM approval.
2. Provide WASD Water Verification Letter.
3. Provide Dept. of Health Approval.
4. Miami Dade County Permit needed for Driveway Approach on Old Cutler Rd.
5. Property owner must enter into a Covenant for Maintenance of Landscaping within Right of Way Agreement with Miami Dade County Public Works.
6. Miami Dade County Permit needed for work within Old Cutler Rd. Right of Way.

Standard Comments:

1. The Public Works Department reserves the right to add or modify requirements based upon any additional information that may be received during and after this review process.

Department of Building & Capital Projects
Comment Sheet

Department: Electrical

Inspector: Tom Flingos

Process Number: BLD 2015. 7898

Date: 11.2.15

1. E 2 Riser Does Not include Panel C
2. Panels in Laundry must comply NEC 110.26 working Space

OFFICE OF THE PROPERTY APPRAISER

Summary Report

Generated On : 10/26/2015

Property Information	
Folio:	33-5023-002-0200
Property Address:	13940 OLD CUTLER RD
Owner	ROUGET SANCHEZ
Mailing Address	13940 OLD CUTLER RD MIAMI , FL 33158
Primary Zone	2300 ESTATES - 1 ACRE
Primary Land Use	0101 RESIDENTIAL - SINGLE FAMILY : 1 UNIT
Beds / Baths / Half	3 / 2 / 0
Floors	1
Living Units	1
Actual Area	3,008 Sq.Ft
Living Area	2,933 Sq.Ft
Adjusted Area	2,581 Sq.Ft
Lot Size	38,768 Sq.Ft
Year Built	1950

Assessment Information			
Year	2015	2014	2013
Land Value	$358,604	$290,760	$222,916
Building Value	$173,548	$170,060	$137,603
XF Value	$18,262	$18,428	$18,595
Market Value	$550,414	$479,248	$379,114
Assessed Value	$387,878	$384,800	$379,114

Taxable Value Information			
	2015	2014	2013
County			
Exemption Value	$50,000	$50,000	$50,000
Taxable Value	$337,878	$334,800	$329,114
School Board			
Exemption Value	$25,000	$25,000	$25,000
Taxable Value	$362,878	$359,800	$354,114
City			
Exemption Value	$50,000	$50,000	$50,000
Taxable Value	$337,878	$334,800	$329,114
Regional			
Exemption Value	$50,000	$50,000	$50,000
Taxable Value	$337,878	$334,800	$329,114

Benefits Information				
Benefit	Type	2015	2014	2013
Save Our Homes Cap	Assessment Reduction	$162,536	$94,448	
Homestead	Exemption	$25,000	$25,000	$25,000
Second Homestead	Exemption	$25,000	$25,000	$25,000

Note: Not all benefits are applicable to all Taxable Values (i.e. County, School Board, City, Regional).

Sales Information			
Previous Sale	Price	OR Book-Page	Qualification Description
09/13/2012	$520,000	28272-4919	Qual by exam of deed
10/01/1998	$0	18323-3002	Qual by exam of deed
02/01/1996	$0	17912-1387	Qual by exam of deed
05/01/1988	$0	00000-00000	Qual by exam of deed

Short Legal Description

23 55 40 .89 AC
FARMERS ACRES PB 50-65
LOT 2 BLK 3
OR 18323-3002 1098 4
F/A/U 30-5023-002-0200

The Office of the Property Appraiser is continually editing and updating the tax roll. This website may not reflect the most current information on record. The Property Appraiser and Miami-Dade County assumes no liability, see full disclaimer and User Agreement at http://www.miamidade.gov/info/disclaimer.asp

Version:

Department of Public Works
Planning and Zoning Comment Sheet

Project: New Single Family Residence

Permit No: BLD-2015-7898

Project Site: 13940 OLD CUTLER RD

Reviewer: Danny Casals

Date: November 17, 2015

Comments:

1. Provide DERM approval.
2. Provide WASD Water Verification Letter.
3. Provide Dept. of Health Approval.

Standard Comments:

1. The Public Works Department reserves the right to add or modify requirements based upon any additional information that may be received during and after this review process.

Home Citizen Services Human Resources Business Services

Permits & Inspections: Actions

My Profile Log Off Help Contact

BLD-2015-7898

Applied	Approved	Issued	Final	Expires
10/26/2015				09/10/2016

Type **NEW CONSTRUCTION RESIDENTIAL 1 OR 2 STORY**

Status **pending**

Permit Description

NEW SFR 6600 SQ FT (5TH EDITION FBC 2014)

Permit Address **13940 OLD CUTLER RD PALMETTO BAY FL 33158**

Applicant **JEMARIE SANCHEZ** Owner **Y** Cust# **00023384**

Owner **JEMARIE SANCHEZ**

Viewing Actions <-- Select the information you would like to view.

Group	Action	Approver	Start Date	Comp'd Date	Comp'd Code	Comment
PERMIT COUNTER	intake - APPLICATION INTAKE	jvillegas		10/26/2015		
PERMIT COUNTER	cuff - COLLECT UPFRONT FEE	jvillegas		10/26/2015		
PLANS PROCESSING	routeplans - ROUTE PLANS FOR REVIEW	jvillegas		10/26/2015		
ZONING REVIEW	zrev - ZONING REVIEW	mrodriguez		10/28/2015	Denied	1- PROVIDE DEMOLITION PERMIT FOR EXISTING HOUSE 2- PROVIDE DERM APPROVAL (STAMP) 3- PROVIDE CORRECT SIZE (AS PER PROPERY APPRAISALS 38768 SQ FT) PROVIDE NOTE THAT FRONT WALL REQUIRES SEPERATE PERMIT 4- PROVIDE COMPLETE ZONING LEGENDE (LANDSCAPE INFORMATION AS PER SECTION 30-50 OF VI;;AGE OF PALMETTO BAY ZONING CODE) 5-MAXIMUN SIZE F9OR GARAGE IS 500 SQUARE FEET AS PER DEFINITION 30-40 6- PROVIDE LOT COVERAGE BREAKDOWN (MUST INCLUDE EVERYTHING UNDER ROOF AND OVERHANGS AS PER DEFINITION 30-40) 7-PROVIDE NUMBER OF STORIES AS PART OF THE ZONING LEGEND 8-PROVIDE SETBACKS ON CONCRETE PAVERS 9-PROVIDE LANDSCAPE PLAN AS PER SECTION 30-100 10- ADDITIONAL COMMENTS WILL BE PROVIDED UPON REVIEW OF A DETAIL RE-SUBMITTAL. THE VILLAGE OF PALMETTO BAY RESERVES THE RIGHT TO COMMENT FURTHER IN THE PROJECTS AS DETAILS AND/OR EXPLANATIONS ARE PROVIDED AND MAY REVISE PREVIOUS COMMENTS

					BASED ON THE ADDITIONAL COMMENTS PROVIDED.
ZONING REVIEW	zrev - ZONING REVIEW	mrodriguez	01/20/2016	Denied	1- PROVIDE DEMOLITION PERMIT FOR EXISTING HOUSE 2- PROVIDE DERM APPROVAL (STAMP) 3- LANDSCAPE LEGEND MUST BE ACCORDING TO PALMETTO BAY ZONING CODE CHAPTER 30 NOT DADE COUNTY 33 4- PROVIDE HEIGHT TO ROOF RIDGE (A-3)D 5- PROVIDE DECLARATION OF USE 6- PROVIDE DERM TREE PERMIT FOR RELOCATION 7- ADDITIONAL COMMENTS WILL BE PROVIDED UPON REVIEW OF A DETAIL RE-SUBMITTAL. THE VILLAGE OF PALMETTO BAY RESERVES THE RIGHT TO COMMENT FURTHER IN THE PROJECTS AS DETAILS AND/OR EXPLANATIONS ARE PROVIDED AND MAY REVISE PREVIOUS COMMENTS BASED ON THE ADDITIONAL COMMENTS PROVIDED.
BUILDING REVIEW	brev - BUILDING REVIEW	soliver	10/30/2015	Pending	
BUILDING REVIEW	brev - BUILDING REVIEW	ogarcia	03/02/2016	Denied	BUILDING DENIED 1. SECOND REVIEW. NEED NARRATIVE ADDRESSING ALL COMMENTS INCLUDING THE LOCATION OF THE REVISIONS FOR 12/8/15 REVIEW
BUILDING REVIEW	brev - BUILDING REVIEW	ogarcia	12/08/2015	Denied	1. Need DERM and HRS approval 2. Need demolition permit for existing structures, septic tank, pool, etc. 3. Provide Flood criteria notes 4. Clarify method of rain water disposal converging from covered terrace and great room roofs. Note that the garage floor is the lowest level. 5. Show electric and water on site plan 6. Electric panel ? B? calls out for irrigation pump. Show location and proposed irrigation well. 7. Provide special inspector from for soil/fill compaction reinforced masonry, truss installation and bracing 8. Please address summer kitchen equipment. Is BBQ gas? Need details of exhaust hood dotted in on floor plan. Electrical? 9. 8?x8? conc. Cap shown over window openings must address structurally. 10. Architectural wall sections on A-4 and A-5 show regular overhangs, but typical wall section on A-6 shows a cant called out as an overhang. Please clarify. 11. Soffit must have plywood under lath and stucco when 24? or more 12. Overhangs shown on sections on s-3 do not match those on A-6 13.

					Roof slope 6112 on sheet A-2 and A-3 and 7:12 on A6 14. 5/8? drywall is not for exterior ceilings. Please revise sections 15. Describe components of metal roof on typ. Section 16. Specify on window and door schedules glass specs required on energy calcs. 17. Please provide narrative addressing all comments and the location of revisions.
STRUCTURAL REVIEW	srev - STRUCTURAL REVIEW	soliver	10/30/2015	Pending	
STRUCTURAL REVIEW	srev - STRUCTURAL REVIEW	mcankat	03/09/2016	Denied	STRUCTURAL DENIED 1. ALL PREVIOUS COMMENTS DATED NOVEMBER 24, 2015 ARE STILL OUTSTANDING 2. RESPOND IN WRITING, PROVIDE NARRATIVE
STRUCTURAL REVIEW	srev - STRUCTURAL REVIEW	mcankat	11/30/2015	Denied	11.24.15 Structural Denied M.Cankat-gb 1) Governing Building COde is Florida Building Code 2014, 5th Edition/ high velocity Hurricane Zone sections. 2) Update ACI & Masonry code references to latest revision datesw as per F.B.C 2014. 3) F6.5 and F7.0 are not in the footing schedule. 4) Show F4X6 and F7X12.5 on foundation plan. If they are not used delete from the footing schedule. 5) Indicate number of plies for girder trusses on framing plans. 6) Some girder trusses are supported at very close to the corner of the walls. Locate the center of the connection from the corner (Provide distance dimension) Check the edge distance of the bolts, if requried revise the typical connection detail. 7) Provide wind design pressures for the windows and doors and post them on Architectural elevations. 8) Truss connectors should have adequate strength for combined uplift and lateral forces. Provide calculation that typical truss with longest span have adequate fastener capacity for combined loads and satisfy the untiy equation. 9) Please provide a narrative describing the revisions is made.
ELECTRICAL REVIEW	erev - ELECTRICAL REVIEW	slugo	11/02/2015	Denied	ELECTRICAL DENIED 1. E2 RISERS DOES NOTR INCLUDE PANEL C 2. PANELS IN LAUNDRY MUST COMPLY NEC 110.26 WORKING SPACE
ELECTRICAL REVIEW	erev - ELECTRICAL REVIEW	tflingos	01/25/2016	Approved	ELECTRICIAL APPROVED
MECHANICAL REVIEW	mrev - MECHANICAL REVIEW	rregula	11/03/2015	Approved	MECHANICAL APPROVED
PLUMBING REVIEW	prev - PLUMBING REVIEW	gurgelles	10/30/2015	Denied	1. PROVIDE DEPT OF HEALTH APPROVAL. 2.

					PROVIDE DERM APPROVAL 3. PROVIDE WASD WATER VERIFICATION LETTER
PLUMBING REVIEW	prev - PLUMBING REVIEW	gurgelles	03/08/2016	Denied	PLUMBING DENIED SAME COMMENTS
PLUMBING REVIEW	prev - PLUMBING REVIEW	gurgelles	01/25/2016	Denied	PLUMBING DENIED SAME COMMENTS 1. PROVIDE DEPT OF HEALTH APPROVAL. 2. PROVIDE DERM APPROVAL 3. PROVIDE WASD WATER VERIFICATION LETTER
PUBLIC WORKS	pwrevc - PUBLIC WORK REVIEW	dcasals	11/17/2015	Denied	11.17.15 Pworks denied D.Casals -gb 1) Provide DERM approval. 2) Provide WASD water verification letter. 3) Provide Dept of Health Approval.
PUBLIC WORKS	pwrevc - PUBLIC WORK REVIEW	dcasals	03/08/2016	Denied	PUBLC WORKS DENIED 1. PROVIDE DERM APPROVAL 2. PROVIDE WASD WATER VERIFICATION LETTER 3. PROVIDE DEPT. OF HEALTH APPROVAL 4. MIAMI DADE COUNTY PERMIT NEEDED FOR DRIVEWAY APPROACH ON OLD CUTLER RD 5. PROPERTY OWNER MUST ENTER INTO A COVENANT FOR MAINTENANCE OF LANDSCAPING WITHIN RIGHT OF WAYAGREEMENT WITH MIAMI DADE COUNTY PUBLIC WORKS 6. MIAMI DADE COUNTY PERMIT NEEDED FOR WORK WITHIN OLD CUTLER RD RIGHT OF WAY STANDARD COMMENTS 1. THE PUBLC WORKS DEPARTMENT RESERVES THE RIGHT TO ADD OR MODIFY REQUIREMENTS BASED UPON ANY ADDITIONAL INFORMATION THAT MAY BE RECEIVED DURING AND AFTER THIS REVIEW PROCESS
PUBLIC WORKS	pwrevc - PUBLIC WORK REVIEW	dcasals	02/09/2016	Denied	PUBLIC WORKS DENIED 1. PROVIDE DERM APPROVAL 2. PROVIDE WASD WATER VERIFICATION LETTER 3. PROVIDE DEPT OF HEALTH APPROVAL 4. MIAMI DADE COUNTY PERMIT NEEDED FOR DRIVEWAY 5. PROPERTY OWNER MUST ENTER INTO A COVENANT FOR MAINTENANCE OF LANDSCAPING WITHIN RIGHT OF WAY AGREEMENT WITH MIAMI DADE COUNTY PUBLIC WORKS STANDARD COMMENTS: 1. THE PUBLIC SERVICES DEPARTMENT RESERVES THE RIGHT TO ADD OR MODIFY REQUIREMENTS BASED UPON ANY ADDITIONAL INFORMATION THAT MAY BE RECEIVED DURING AND AFTER THIS REVIEW PROCESS.
PLANNING	pzrev - PLANNING & ZONING REVIEW				
IMPACT FEES					

	notifycust - NOTIFY CUSTOMER
PLANS PROCESSING	notifycust - NOTIFY CUSTOMER
PERMIT COUNTER	review - REVIEW
PERMIT COUNTER	verifycont - VERIFY CONTRACTOR
PERMIT COUNTER	collissue - COLLECT FEES/ISSUE PERMIT
INSPECTIONS	700 - NOC
INSPECTIONS	601 - FOUNDATION GROUNDING
INSPECTIONS	100 - SETBACK
INSPECTIONS	703 - STEM WALLS
INSPECTIONS	602 - 2ND FLOOR SLAB-ELECTRICAL
INSPECTIONS	603 - EXT UNDERGROUND
INSPECTIONS	607 - SERVICE W/W
INSPECTIONS	604 - ELECTRICAL ROUGH
INSPECTIONS	201 - UNDERGROUND
INSPECTIONS	202 - PARTIAL-MECH
INSPECTIONS	200 - ROUGH-MECH
INSPECTIONS	302 - TEMP TOILET
INSPECTIONS	303 - UNDERGROUND
INSPECTIONS	304 - GROUND ROUGH
INSPECTIONS	305 - TOP OUT
INSPECTIONS	306 - TUB & WATER PIPING
INSPECTIONS	307 - WATER SERVICE
INSPECTIONS	308 - SEWER CONNECTION
INSPECTIONS	320 - LP TANK
INSPECTIONS	701 - FOUNDATION
INSPECTIONS	704 - COMPACTION CERT OR SOIL LETTER
INSPECTIONS	705 - TERMITE TREATMENT
INSPECTIONS	702 - COLUMNS
INSPECTIONS	708 - COLUMN 1ST FLOOR
INSPECTIONS	716 - COLUMNS 2ND FLOOR
INSPECTIONS	707 - SLAB 1 ST FLOOR/ ELEVATION CERTIFICATE
INSPECTIONS	714 - SLAB 2ND FLOOR
INSPECTIONS	710 - REINF MAS/SPECIAL INSP.
INSPECTIONS	711 - TIE BEAM 1 ST FLOOR
INSPECTIONS	712 - POURED CELLS 1ST FLOOR
INSPECTIONS	718 - TIE BEAM 2ND FLOOR
INSPECTIONS	721 - ROOF TRUSSES/BRACING
INSPECTIONS	724 - ROOF FRAMING
INSPECTIONS	726 - PRE-FAB STAIR
INSPECTIONS	722 - ROOF SHEATHING
INSPECTIONS	725 - OTHER SHEATHING

INSPECTIONS	730 - LATHING
INSPECTIONS	727 - FRAMING
INSPECTIONS	728 - FRAMING 2ND FLOOR
INSPECTIONS	723 - WINDOW IN-PROGRESS
INSPECTIONS	729 - INSULATION / CERTIFICATE
INSPECTIONS	719 - DRYWALL
INSPECTIONS	739 - GARAGE DOOR
INSPECTIONS	740 - RAILING
INSPECTIONS	734 - WINDOW FINAL
INSPECTIONS	738 - DOOR FINAL
INSPECTIONS	737 - FINAL SHUTTERS
INSPECTIONS	628 - FINAL ELECTRICAL
INSPECTIONS	216 - FINAL MECHANICAL
INSPECTIONS	327 - FINAL PLUMBING
INSPECTIONS	101 - LANDSCAPING
INSPECTIONS	121 - FINAL ZONING
INSPECTIONS	758 - FINAL STRUCTURAL BUILDING
INSPECTIONS	issueco - CERTIFICATE OF OCCUPANCY/COMPLETION

Water and Sewer
PO Box 330316 • 3071 SW 35 Avenue
Miami, Florida 33233-0316
T 305-665-7471

MIAMI-DADE COUNTY

VERIFICATION FORM

THIS FORM IS NOT VALID WITHOUT A PAID INVOICE AND EXPIRES ONE YEAR FROM THE DATE ON FORM

ATLAS PAGE: N-23 INV#: 17101 FORM #: 201654404 DATE: 2/18/2016

miamidade.gov

NAME OF OWNER:	MR AND MRS R SANCHEZ RESIDENCE - M2016001461
PROPERTY ADDRESS	13940 OLD CUTLER ROAD
PROPOSED USAGE / NO OF UNITS:	8,600 SF (AC) SINGLE FAMILY RESIDENCE PER PAPER PLANS
REPLACES: PREVIOUS USAGE / NO OF UNITS.	SINGLE FAMILY RESIDENCE (PTX 1960) WTR ONLY COB# 4989794970
PROPERTY LEGAL.	22 55 40 .89 AC FARMERS ACRES PB 50-55 LOT 2 BLK 3

FOLIO NUMBER:	33-5023-002-0200			GALLONS PER DAY INCREASE:	330
PROPOSED FLOW:	550	PREVIOUS SQUARE FOOTAGE:	2,581	☐	NEW CONSTRUCTION
PREVIOUS FLOW:	220	PROPOSED SQUARE FOOTAGE:	8,600	☑	INTERIOR RENOVATION
ADOPTED FLOW:	0	☐ CRITICAL HABITAT		☐	SEWER ONLY

THIS IS TO CERTIFY THAT THE MIAMI-DADE WATER AND SEWER DEPARTMENT DOES HAVE A(N) ____8____ INCH WATER MAIN ABUTTING THE SUBJECT LEGALLY DESCRIBED PROPERTY. WE ARE WILLING TO SERVE THE SUBJECT PROPERTY, (OR, IF "WILL HAVE", UPON PROPER CONVEYANCE AND PLACEMENT INTO SERVICE OF WATER FACILITIES BY THE DEVELOPER UNDER AGREEMENT WITH THE DEPARTMENT, (AGREEMENT ID # N/A) SUBJECT TO PROHIBITIONS OR RESTRICTIONS OF GOVERNMENTAL AGENCIES HAVING JURISDICTION OVER MATTERS OF WATER SUPPLY OR WITHDRAWAL.

BY [signature]

SIGNATURE OF REPRESENTATIVE

Nancy Cobb - New Business Representative

AUTHORIZED BY

NEW BUSINESS COMMENTS. WCC=$476.70 WSC=$90.00 VF=$30.00 TOTAL=$578.70 1-INCH SERVICE NEEDS TO BE RENEWED.

THIS IS TO CERTIFY THAT THE MIAMI-DADE WATER AND SEWER DEPARTMENT DOES NOT HAVE A(N) ____-____ INCH GRAVITY SEWER MAIN ABUTTING THE SUBJECT LEGALLY DESCRIBED PROPERTY. WE ARE WILLING TO SERVE THE SUBJECT PROPERTY, (OR, IF "WILL HAVE", UPON PROPER CONVEYANCE AND PLACEMENT INTO SERVICE OF SEWER SEWER FACILITIES BY THE DEVELOPER UNDER AGREEMENT WITH THE DEPARTMENT, (AGREEMENT ID # N/A) SUBJECT TO PROHIBITIONS OR RESTRICTIONS OF GOVERNMENTAL AGENCIES HAVING JURISDICTION OVER MATTERS OF SEWAGE DISPOSAL. FURTHERMORE, APPROVAL OF ALL SEWAGE FLOWS INTO THE DEPARTMENT'S SYSTEM MUST BE OBTAINED FROM D.E.R.M. THE ANTICIPATED DAILY WATER AND/OR SEWAGE FLOW FOR THIS PROJECT WILL BE: THREE HUNDRED THIRTY (330) GALLONS PER DAY INCREASE.

BY [signature]

SIGNATURE OF REPRESENTATIVE

Nancy Cobb - New Business Representative

AUTHORIZED BY

NEW BUSINESS COMMENTS. HRS SEPTIC AP1211646 DATED: 1-25-2016

THIS VERIFICATION LETTER CERTIFIES THE AVAILABILITY OF A WATER AND/OR SEWER MAIN ONLY, AND IT DOES NOT GUARANTEE THE EXISTENCE OF A WATER SERVICE LINE OR OF A SEWER LATERAL WITH SUFFICIENT DEPTH TO SERVE THE PROPERTY. FOR ADDITIONAL INFORMATION CALL 786-268-5249/5295. SHOULD IT BECOME NECESSARY TO INSTALL A SERVICE LINE AND/OR A SEWER LATERAL WASD REQUIRES THAT THE DEVELOPER RETAINS SERVICES FROM DESIGNERS AND CONTRACTORS WITH SKILL SETS FOR DESIGNING, BUILDING AND CONNECTING TO PUBLIC WATER AND SEWER SYSTEMS

CONTACT NAME: RICK TORRENTE
CONTACT PHONE: (305) 970-9541
AUTHORIZED BY: [signature] 2/29/16

Printed On: 2/29/2016 9:22:20 AM

NB: Nancy Cobb
PR:

PERMIT #: 13-SC-1641182
APPLICATION #: AP1211646
DATE PAID:
FEE PAID:
RECEIPT #:
DOCUMENT #: PR1002081

STATE OF FLORIDA
DEPARTMENT OF HEALTH
ONSITE SEWAGE TREATMENT AND DISPOSAL SYSTEM
CONSTRUCTION PERMIT

CONSTRUCTION PERMIT FOR: OSTDS New

APPLICANT: Rouget Sanchez

PROPERTY ADDRESS: 13940 Old Cutler Rd Miami, FL 33158

LOT: 2 BLOCK: 3 SUBDIVISION:

PROPERTY ID #: [SECTION, TOWNSHIP, RANGE, PARCEL NUMBER] [OR TAX ID NUMBER]

SYSTEM MUST BE CONSTRUCTED IN ACCORDANCE WITH SPECIFICATIONS AND STANDARDS OF SECTION 381.0065, F.S., AND CHAPTER 64E-6, F.A.C. DEPARTMENT APPROVAL OF SYSTEM DOES NOT GUARANTEE SATISFACTORY PERFORMANCE FOR ANY SPECIFIC PERIOD OF TIME. ANY CHANGE IN MATERIAL FACTS, WHICH SERVED AS A BASIS FOR ISSUANCE OF THIS PERMIT, REQUIRE THE APPLICANT TO MODIFY THE PERMIT APPLICATION. SUCH MODIFICATIONS MAY RESULT IN THIS PERMIT BEING MADE NULL AND VOID. ISSUANCE OF THIS PERMIT DOES NOT EXEMPT THE APPLICANT FROM COMPLIANCE WITH OTHER FEDERAL, STATE, OR LOCAL PERMITTING REQUIRED FOR DEVELOPMENT OF THIS PROPERTY.

SYSTEM DESIGN AND SPECIFICATIONS

T [1,500] GALLONS / GPD Septic CAPACITY
A [ ] GALLONS / GPD N/A CAPACITY
N [ ] GALLONS GREASE INTERCEPTOR CAPACITY [MAXIMUM CAPACITY SINGLE TANK:1250 GALLONS]
K [ ] GALLONS DOSING TANK CAPACITY [ ]GALLONS @[ ]DOSES PER 24 HRS #Pumps [ ]

D [875] SQUARE FEET Trench configuration drain SYSTEM
R [ ] SQUARE FEET N/A SYSTEM
A TYPE SYSTEM: [x] STANDARD [ ] FILLED [ ] MOUND [ ]
I CONFIGURATION: [x] TRENCH [ ] BED [ ]
N
F LOCATION OF BENCHMARK: CL Old cuttler rd. 13.96' NGVD
I ELEVATION OF PROPOSED SYSTEM SITE [22.30] [INCHES / FT] [ABOVE / BELOW] BENCHMARK/REFERENCE POINT
E BOTTOM OF DRAINFIELD TO BE [52.32] [INCHES / FT] [ABOVE / BELOW] BENCHMARK/REFERENCE POINT
L
D FILL REQUIRED: [0.00] INCHES EXCAVATION REQUIRED: [72.00] INCHES

O
T
H
E
R

*Invert elevation of drainfield to be no less than 10.10' NGVD.
*Bottom of drainfield elevation to be no less than 9.60' NGVD.
*Install 42" of slightly limited soil under the bottom of drainfield.
-Perimeter of excavation area shall be at least 2 ft. wider and longer than the proposed absorption bed or drain trench.
The system is sized for 5 bedrooms with a maximum occupancy of 10 persons (2 per bedroom), for a total estimated flow of 700 gpd.
The licensed contractor installing the system is responsible for installing the minimum category of tank in accordance with

SPECIFICATIONS BY: Teresa J Solomon TITLE: Master Septic Tank Contractor

APPROVED BY: Carlos M Icaza TITLE: Dade CHD

DATE ISSUED: 01/25/2016 EXPIRATION DATE: 07/25/2017

DH 4016, 08/09 (Obsoletes all previous editions which may not be used)
Incorporated: 64E-6.003, FAC

v 1.1.4 AP1211646 SE982958

STATE OF FLORIDA
DEPARTMENT OF HEALTH
ONSITE SEWAGE TREATMENT AND DISPOSAL SYSTEM
SITE EVALUATION AND SYSTEM SPECIFICATION

APPLICATION # AP1211646
PERMIT # 13-SC-1641182
DOCUMENT # SE982968

APPLICANT: Rouget Sanchez

CONTRACTOR / AGENT: Statewide Septic Connections, Inc.

LOT: 2 BLOCK: 3

SUBDIVISION: ID#:

TO BE COMPLETED BY ENGINEER, HEALTH DEPARTMENT EMPLOYEE, OR OTHER QUALIFIED PERSON. ENGINEERS MUST PROVIDE REGISTRATION NUMBER AND SIGN AND SEAL EACH PAGE OF SUBMITTAL. COMPLETE ALL ITEMS.

PROPERTY SIZE CONFORMS TO SITE PLAN: [X]YES [ ]NO NET USABLE AREA AVAILABLE: 0.89 ACRES

TOTAL ESTIMATED SEWAGE FLOW: 700 GALLONS PER DAY [RESIDENCES-TABLE1 / OTHER-TABLE 2]

AUTHORIZED SEWAGE FLOW: 2224.98 GALLONS PER DAY [1500 GPD/ACRE OR 2500 GPD/ACRE]

UNOBSTRUCTED AREA AVAILABLE: 1313.00 SQFT UNOBSTRUCTED AREA REQUIRED: 1313.00 SQFT

BENCHMARK/REFERENCE POINT LOCATION: CL Old cuttler rd. 13.96' NGVD

ELEVATION OF PROPOSED SYSTEM SITE 22.30 [INCHES / FT] [ABOVE / BELOW] BENCHMARK/REFERENCE POINT

THE MINIMUM SETBACK WHICH CAN BE MAINTAINED FROM THE PROPOSED SYSTEM TO THE FOLLOWING FEATURES

SURFACE WATER: FT DITCHES/SWALES: FT NORMALLY WET: [ ]YES [ ]NO

WELLS: PUBLIC: FT LIMITED USE: FT PRIVATE: FT NON-POTABLE: FT

BUILDING FOUNDATIONS: 5 FT PROPERTY LINES: 5 FT POTABLE WATER LINES: 48 FT

SITE SUBJECT TO FREQUENT FLOODING? [ ]YES [X]NO 10 YEAR FLOODING? [ ]YES [X]NO

10 YEAR FLOOD ELEVATION FOR SITE: FT [MSL / NGVD] SITE ELEVATION: 12.10 FT [MSL / NGVD]

SOIL PROFILE INFORMATION SITE 1

USDA SOIL SERIES: Udorthents, limestone substrat

Munsell #/Color	Texture	Depth
10YR 5/1	Sand	0 To 11
REFUSAL	Oolitic Limestone	11 To 72

SOIL PROFILE INFORMATION SITE 2

USDA SOIL SERIES: Udorthents, limestone substrat

Munsell #/Color	Texture	Depth
10YR 5/1	Sand	0 To 8
REFUSAL	Oolitic Limestone	8 To 72

OBSERVED WATER TABLE: INCHES [ABOVE / BELOW] EXISTING GRADE TYPE: [PERCHED / APPARENT]

ESTIMATED WET SEASON WATER TABLE ELEVATION: 85 INCHES [ABOVE / BELOW] EXISTING GRADE

HIGH WATER TABLE VEGETATION: [ ]YES [X]NO MOTTLING: [ ]YES [X]NO DEPTH: INCHES

SOIL TEXTURE/LOADING RATE FOR SYSTEM SIZING: Replacement 4-FS/0.80 DEPTH OF EXCAVATION: 72 INCHES

DRAINFIELD CONFIGURATION: [X] TRENCH [ ] BED [ ] OTHER (SPECIFY)

REMARKS/ADDITIONAL CRITERIA

SITE EVALUATED BY: DATE: 11/03/2015

Solomon, Teresa (Title: Master Septic Tank Contractor) (Statewide Septic Connections Inc.

NOTICE OF RIGHTS

A party whose substantial interest is affected by this order may petition for an administrative hearing pursuant to sections 120.569 and 120.57, Florida Statutes. Such proceedings are governed by Rule 28-106, Florida Administrative Code. A petition for administrative hearing must be in writing and must be received by the Agency Clerk for the Department, within twenty-one (21) days from the receipt of this order. The address of the Agency Clerk is 4052 Bald Cypress Way, BIN # A02, Tallahassee, Florida 32399-1703. The Agency Clerk's facsimile number is 850-410-1448.

Mediation is not available as an alternative remedy.

Your failure to submit a petition for hearing within 21 days from receipt of this order will constitute a waiver of your right to an administrative hearing, and this order shall become a 'final order'.

Should this order become a final order, a party who is adversely affected by it is entitled to judicial review pursuant to Section 120.68, Florida Statutes. Review proceedings are governed by the Florida Rules of Appellate Procedure. Such proceedings may be commenced by filing one copy of a Notice of Appeal with the Agency Clerk of the Department of Health and a second copy, accompanied by the filing fees required by law, with the Court of Appeal in the appropriate District Court. The notice must be filed within 30 days of rendition of the final order.

M20160014 61

NOTE: ALL SHEETS MUST BE REVIEWED

MIAMI-DADE COUNTY DEPARTMENT OF REGULATORY AND ECONOMIC RESOURCES
Herbert S. Saffir Permitting and Inspection Center
11805 SW 26th Street (Coral Way) • Miami, Florida 33175-2474 • (786) 315-2000

APPLICATION FOR MUNICIPAL PERMIT APPLICANTS THAT REQUIRE PLAN REVIEW FROM MIAMI-DADE FIRE RESCUE AND/OR ENVIRONMENTAL SERVICES

PROVIDE MUNICIPAL PROCESS NUMBER HERE

LOCATION OF IMPROVEMENTS

Job Address: 13940 ~~800~~ OLD CUTLER RD
Folio:
Lot: Block:
Subdivision: PBpg:
Metes and bounds:

CONTRACTOR INFORMATION

Contractor No.: DIY OWN
Last four (4) digits of Qualifier No.:
Contractor Name:
Qualifier Name:
Address:
City: State: Zip:

TYPE OF IMPROVEMENTS

- [X] New Construction on Vacant Land
- [ ] Alteration Interior
- [ ] Alteration Exterior
- [ ] Relocation of Structure
- [ ] Enclosure
- [ ] Repair
- [ ] Repair Due to Fire
- [ ] Demolish
- [ ] Shell Only
- [ ] Addition Attached
- [ ] Addition Detached
- [ ] Re-Roof
- [ ] Foundation Only
- [ ] Tent

Current use of property: VACANT
Description of Work: NEW SFR
Sq. Ft.: 6600 Units: Floors:
Value of Work: $700,000

PERMIT TYPE

- [ ] MBLD* Category: 02
- [ ] MELE
- [ ] MPLU
- [ ] MLPG
- [ ] MMEC
- [ ] FIRE

REVIEW STATUS

- [ ] Chg. Contractor
- [ ] Re-Issue
- [ ] Re-Stamp
- [ ] Revision
- [ ] Not Applicable for Fire

OWNER'S NAME

Owner: ROGER SANCHEZ
Address: 13940 OLD CUTLER RD
City: MIAMI State: Zip:
Phone: 3/219 5966
Last four (4) digits of Owner's Social Security No.:

PERSON TO PICK UP PLANS

Name: RICK TORRENTE
Address: 14746 SW 61 CT
City: MIAMI State: FL Zip:
Phone: 3/970 9541

ARCHITECT / ENGINEER

Owner: DELLOW ARCHITECTURE
Address:
City: State: Zip:
Phone:

FIRE SPECIAL REQUEST PLAN REVIEW (SRI)

I am requesting a Special Request Plan Review (SRI) to be scheduled as soon as possible at the rate of $209 for the first hour and $71.50 per each additional hour in addition to the review fees. Minimum charge one-hour.

1st Request: Date:
2nd Request: Date:
3rd Request: Date:

PERA OPTIONAL PLAN REVIEW (OPR)

I am requesting Optional Plan Review (OPR) to be scheduled as soon as possible at the rate of $75 for each discipline. Additional review fees may apply.

1st Request: Date:
2nd Request: Date:
3rd Request: Date:

MIAMI-DADE COUNTY

11805
Miami, Flori

NOTICE TO MIAMI-DADE COUNTY BUILDING DEPARTMENT OF EMPLOYMENT AS SPECIAL INSPECTOR UNDER THE FLORIDA BUILDING CODE

I (We) have been retained by / to perform sp services under the Florida Building Code at the Mr & Mrs. R. Sanchez / Juan Rodriguez project on t structures as of 3-21-16 (date). I am a registered architect or professional engineer State of Florida.

Process Numbers: _____ _____

- ☐ Special inspector for piling, FBC 1822.12.0
- ☑ Special inspector for trusses over 35 ft. long or 6 ft high 2319.17.2.4.2
- ☑ Special inspector for reinforced masonry, FBC 2122.4
- ☑ Special inspector for steel connections, FBC 2218.2
- ☑ Special inspector for soil compaction, FBC 1820.3.1
- ☐ Special inspector for precast units & attachments per FBC 1927.12
- ☐ Special inspector for _____

***Note**: Only the marked boxes apply.*

The following individual(s) employed by this firm or me are authorized representatives to perform inspe

1. LEOPOLDO BELLON 2. _____
3. _____ 4. _____

** Special Inspectors utilizing authorized representatives shall insure the authorized representative is qualified by educat to perform the duties assigned by the Special Inspector. The qualifications shall include licensure as a professional engin graduation from an engineering education program in civil or structural engineering; graduation from an architectural edu successful completion of the NCEES Fundamentals Examination; or registration as building inspector or general contracto*

I, (we) will notify Miami-Dade County Building Department of any changes regarding authorized personne inspection services.

I, (we) understand that a Special Inspector inspection log for each building must be displayed in a conven on the site of reference by the Miami-Dade County Building Department Inspector. All mandatory ins required by the Florida Building Code, must be performed by the County. The County building ins required by the Florida Building Code, must be performed by the County. The County building inspecti called for on all mandatory inspections. *Inspections performed by the Special Inspector hired by the O* ***addition*** *to the mandatory inspections performed by the Department.* Further, upon completion of the each Building Permit I will submit to the Building Inspector at the time of final inspection the completec log form and a sealed statement indicating that, to the best of my knowledge, belief and professional judg portions of the project outlined above meet the intent of the Florida Building Code and are in substantial a with the approved plans.

STATE OF FLORIDA LEOPOLDO BELLON AR8737 REGISTERED ARCHITECT

Signed and Sealed

Date: 03.21.16.

Engineer/Architect
Name LEOPOLDO BELLON
(print)

Address 13131 SW 132 St. F
Miami FL 33186.

Phone No. 305-790-2626

123_01-121 6/06

Water and Sewer
PO Box 330316 • 3071 SW 38 Avenue
Miami, Florida 33233-0316
T 305-665-7471

MIAMI-DADE COUNTY

VERIFICATION FORM

THIS FORM IS NOT VALID WITHOUT A PAID INVOICE AND EXPIRES ONE YEAR FROM THE DATE ON FORM

miamidade.gov

ATLAS PAGE: N-23 INV#: 17101 FORM #: 201634404 DATE 2/18/2016

NAME OF OWNER: MR AND MRS R SANCHEZ RESIDENCE - M2016001461

PROPERTY ADDRESS: 13940 OLD CUTLER ROAD

PROPOSED USAGE / NO OF UNITS: 6,600 SF (AC) SINGLE FAMILY RESIDENCE PER PAPER PLANS

REPLACES: PREVIOUS USAGE / NO OF UNITS: SINGLE FAMILY RESIDENCE (PTX 1950) W/TR ONLY COS# 4989794970

PROPERTY LEGAL: 22 56 40 .89 AC FARMERS ACRES PB 50-65 LOT 2 BLK 3

FOLIO NUMBER: 33-5023-002-0200 GALLONS PER DAY INCREASE: 330

PROPOSED FLOW:	550	PREVIOUS SQUARE FOOTAGE:	2,581	☐ NEW CONSTRUCTION
PREVIOUS FLOW:	220	PROPOSED SQUARE FOOTAGE:	6,600	☑ INTERIOR RENOVATION
ADOPTED FLOW:	0	☐ CRITICAL HABITAT		☐ SEWER ONLY

THIS IS TO CERTIFY THAT THE MIAMI-DADE WATER AND SEWER DEPARTMENT DOES HAVE A(N) ____8____ INCH WATER MAIN ABUTTING THE SUBJECT LEGALLY DESCRIBED PROPERTY. WE ARE WILLING TO SERVE THE SUBJECT PROPERTY, (OR, IF "WILL HAVE", UPON PROPER CONVEYANCE AND PLACEMENT INTO SERVICE OF WATER FACILITIES BY THE DEVELOPER UNDER AGREEMENT WITH THE DEPARTMENT, (AGREEMENT ID # N/A) SUBJECT TO PROHIBITIONS OR RESTRICTIONS OF GOVERNMENTAL AGENCIES HAVING JURISDICTION OVER MATTERS OF WATER SUPPLY OR WITHDRAWAL.

BY: SIGNATURE OF REPRESENTATIVE

Nancy Cobb - New Business Representative
AUTHORIZED BY

NEW BUSINESS COMMENTS: WCC=$478.70 WSC=$90.00 VF=$30.00 TOTAL=$578.70 1-INCH SERVICE NEEDS TO BE RENEWED.

THIS IS TO CERTIFY THAT THE MIAMI-DADE WATER AND SEWER DEPARTMENT DOES NOT HAVE A(N) ____--____ INCH GRAVITY SEWER MAIN ABUTTING THE SUBJECT LEGALLY DESCRIBED PROPERTY. WE ARE WILLING TO SERVE THE SUBJECT PROPERTY, (OR, IF "WILL HAVE", UPON PROPER CONVEYANCE AND PLACEMENT INTO SERVICE OF SEWER SEWER FACILITIES BY THE DEVELOPER UNDER AGREEMENT WITH THE DEPARTMENT, (AGREEMENT ID # N/A) SUBJECT TO PROHIBITIONS OR RESTRICTIONS OF GOVERNMENTAL AGENCIES HAVING JURISDICTION OVER MATTERS OF SEWAGE DISPOSAL. FURTHERMORE, APPROVAL OF ALL SEWAGE FLOWS INTO THE DEPARTMENT'S SYSTEM MUST BE OBTAINED FROM D.E.R.M. THE ANTICIPATED DAILY WATER AND/OR SEWAGE FLOW FOR THIS PROJECT WILL BE THREE HUNDRED THIRTY (330) GALLONS PER DAY INCREASE

BY: SIGNATURE OF REPRESENTATIVE

Nancy Cobb - New Business Representative
AUTHORIZED BY

NEW BUSINESS COMMENTS: HRS SEPTIC AP1211646 DATED 1-25-2016

THIS VERIFICATION LETTER CERTIFIES THE AVAILABILITY OF A WATER AND/OR SEWER MAIN ONLY AND IT DOES NOT GUARANTEE THE EXISTENCE OF A WATER SERVICE LINE OR OF A SEWER LATERAL WITH SUFFICIENT DEPTH TO SERVE THE PROPERTY. FOR ADDITIONAL INFORMATION CALL 786-268-5249/5299. SHOULD IT BECOME NECESSARY TO INSTALL A SERVICE LINE AND/OR A SEWER LATERAL WASD REQUIRES THAT THE DEVELOPER RETAINS SERVICES FROM DESIGNERS AND CONTRACTORS WITH SKILL SETS FOR DESIGNING, BUILDING AND CONNECTING TO PUBLIC WATER AND SEWER SYSTEMS

CONTACT NAME: RICK TORRENTE
CONTACT PHONE: (305) 970-9541
AUTHORIZED BY: 2/20/16

Printed On: 2/23/2016 9:22:23 AM

NB: Nancy Cobb
PR:

PERMIT #: 13-SC-1641182
APPLICATION #: AP1211646
DATE PAID:
FEE PAID:
RECEIPT #:
DOCUMENT #: PR1002081

STATE OF FLORIDA
DEPARTMENT OF HEALTH
ONSITE SEWAGE TREATMENT AND DISPOSAL SYSTEM
CONSTRUCTION PERMIT

CONSTRUCTION PERMIT FOR: OSTDS New

APPLICANT: Rouget Sanchez

PROPERTY ADDRESS: 13940 Old Cutler Rd Miami, FL 33158

LOT: 2 BLOCK: 3 SUBDIVISION:

PROPERTY ID #: [SECTION, TOWNSHIP, RANGE, PARCEL NUMBER] [OR TAX ID NUMBER]

SYSTEM MUST BE CONSTRUCTED IN ACCORDANCE WITH SPECIFICATIONS AND STANDARDS OF SECTION 381.0065, F.S., AND CHAPTER 64E-6, F.A.C. DEPARTMENT APPROVAL OF SYSTEM DOES NOT GUARANTEE SATISFACTORY PERFORMANCE FOR ANY SPECIFIC PERIOD OF TIME. ANY CHANGE IN MATERIAL FACTS, WHICH SERVED AS A BASIS FOR ISSUANCE OF THIS PERMIT, REQUIRE THE APPLICANT TO MODIFY THE PERMIT APPLICATION. SUCH MODIFICATIONS MAY RESULT IN THIS PERMIT BEING MADE NULL AND VOID. ISSUANCE OF THIS PERMIT DOES NOT EXEMPT THE APPLICANT FROM COMPLIANCE WITH OTHER FEDERAL, STATE, OR LOCAL PERMITTING REQUIRED FOR DEVELOPMENT OF THIS PROPERTY.

SYSTEM DESIGN AND SPECIFICATIONS

T [1,500] GALLONS / GPD Septic CAPACITY
A [ ] GALLONS / GPD N/A CAPACITY
N [ ] GALLONS GREASE INTERCEPTOR CAPACITY [MAXIMUM CAPACITY SINGLE TANK:1250 GALLONS]
K [ ] GALLONS DOSING TANK CAPACITY [ ]GALLONS @[ ]DOSES PER 24 HRS #Pumps [ ]

D [875] SQUARE FEET Trench configuration drain SYSTEM
R [ ] SQUARE FEET N/A SYSTEM
A TYPE SYSTEM: [x] STANDARD [ ] FILLED [ ] MOUND [ ]
I CONFIGURATION: [x] TRENCH [ ] BED [ ]
N
F LOCATION OF BENCHMARK: CL Old cuttler rd. 13.96' NGVD
I ELEVATION OF PROPOSED SYSTEM SITE [22.30] [INCHES / FT] [ABOVE / BELOW] BENCHMARK/REFERENCE POINT
E BOTTOM OF DRAINFIELD TO BE [52.32] [INCHES / FT] [ABOVE / BELOW] BENCHMARK/REFERENCE POINT
L
D FILL REQUIRED: [0.00] INCHES EXCAVATION REQUIRED: [72.00] INCHES

O
T
H
E
R

*Invert elevation of drainfield to be no less than 10.10' NGVD.
*Bottom of drainfield elevation to be no less than 9.60' NGVD.
*Install 42" of slightly limited soil under the bottom of drainfield.
-Perimeter of excavation area shall be at least 2 ft. wider and longer than the proposed absorption bed or drain trench.
The system is sized for 5 bedrooms with a maximum occupancy of 10 persons (2 per bedroom), for a total estimated flow of 700 gpd.
The licensed contractor installing the system is responsible for installing the minimum category of tank in accordance with

SPECIFICATIONS BY: Teresa J Solomon TITLE: Master Septic Tank Contractor

APPROVED BY: Carlos M Icaza TITLE: Dade CHD

DATE ISSUED: 01/25/2016 EXPIRATION DATE: 07/25/2017

DH 4016, 08/09 (Obsoletes all previous editions which may not be used)
Incorporated: 64E-6.003, FAC

[illegible] boring adjacent to the drainfield excavation at the [illegible] of final inspection. Prior to Final Approval, the DOH inspector shall witness the soil boring and compare the results to the original site evaluation submitted. A reinspection fee will be assessed if the contractor is not at the jobsite at the arranged time.

STATE OF FLORIDA
DEPARTMENT OF HEALTH
ONSITE SEWAGE TREATMENT AND DISPOSAL SYSTEM
SITE EVALUATION AND SYSTEM SPECIFICATION

APPLICATION # AP1211646
PERMIT # 13-SC-1641182
DOCUMENT # SE982968

APPLICANT: Rouget Sanchez

CONTRACTOR / AGENT: Statewide Septic Connections, Inc.

LOT: 2 BLOCK: 3

SUBDIVISION: ID#:

TO BE COMPLETED BY ENGINEER, HEALTH DEPARTMENT EMPLOYEE, OR OTHER QUALIFIED PERSON. ENGINEERS MUST PROVIDE REGISTRATION NUMBER AND SIGN AND SEAL EACH PAGE OF SUBMITTAL. COMPLETE ALL ITEMS.

PROPERTY SIZE CONFORMS TO SITE PLAN: [X]YES [ ]NO NET USABLE AREA AVAILABLE: 0.89 ACRES

TOTAL ESTIMATED SEWAGE FLOW: 700 GALLONS PER DAY [RESIDENCES-TABLE1 / OTHER-TABLE 2]

AUTHORIZED SEWAGE FLOW: 2224.98 GALLONS PER DAY [1500 GPD/ACRE OR 2500 GPD/ACRE]

UNOBSTRUCTED AREA AVAILABLE: 1313.00 SQFT UNOBSTRUCTED AREA REQUIRED: 1313.00 SQFT

BENCHMARK/REFERENCE POINT LOCATION: CL Old cuttler rd. 13.96' NGVD

ELEVATION OF PROPOSED SYSTEM SITE 22.30 [INCHES / FT] [ABOVE / BELOW] BENCHMARK/REFERENCE POINT

THE MINIMUM SETBACK WHICH CAN BE MAINTAINED FROM THE PROPOSED SYSTEM TO THE FOLLOWING FEATURES

SURFACE WATER: FT DITCHES/SWALES: FT NORMALLY WET: [ ]YES [ ]NO

WELLS: PUBLIC: FT LIMITED USE: FT PRIVATE: FT NON-POTABLE: FT

BUILDING FOUNDATIONS: 5 FT PROPERTY LINES: 5 FT POTABLE WATER LINES: 48 FT

SITE SUBJECT TO FREQUENT FLOODING? [ ]YES [X]NO 10 YEAR FLOODING? [ ]YES [X]NO

10 YEAR FLOOD ELEVATION FOR SITE: FT [MSL / NGVD] SITE ELEVATION: 12.10 FT [MSL / NGVD]

SOIL PROFILE INFORMATION SITE 1

USDA SOIL SERIES: Udorthents, limestone substrat

Munsell #/Color	Texture	Depth
10YR 5/1	Sand	0 To 11
REFUSAL	Oolitic Limestone	11 To 72

SOIL PROFILE INFORMATION SITE 2

USDA SOIL SERIES: Udorthents, limestone substrat

Munsell #/Color	Texture	Depth
10YR 5/1	Sand	0 To 8
REFUSAL	Oolitic Limestone	8 To 72

OBSERVED WATER TABLE: INCHES [ABOVE / BELOW] EXISTING GRADE TYPE: [PERCHED / APPARENT]

ESTIMATED WET SEASON WATER TABLE ELEVATION: 85 INCHES [ABOVE / BELOW] EXISTING GRADE

HIGH WATER TABLE VEGETATION: [ ]YES [X]NO MOTTLING: [ ]YES [X]NO DEPTH: INCHES

SOIL TEXTURE/LOADING RATE FOR SYSTEM SIZING: Replacement 4-FS/0.80 DEPTH OF EXCAVATION: 72 INCHES

DRAINFIELD CONFIGURATION: [X] TRENCH [ ] BED [ ] OTHER (SPECIFY)

REMARKS/ADDITIONAL CRITERIA

SITE EVALUATED BY: DATE: 11/03/2015

Solomon, Teresa (Title: Master Septic Tank Contractor) (Statewide Septic Connections Inc.

08/09 (Obsoletes previous editions which may not be used) Incorporated: 64E-6.001, FAC

NOTICE OF RIGHTS

A party whose substantial interest is affected by this order may petition for an administrative hearing pursuant to sections 120.569 and 120.57, Florida Statutes. Such proceedings are governed by Rule 28-106, Florida Administrative Code. A petition for administrative hearing must be in writing and must be received by the Agency Clerk for the Department, within twenty-one (21) days from the receipt of this order. The address of the Agency Clerk is 4052 Bald Cypress Way, BIN # A02, Tallahassee, Florida 32399-1703. The Agency Clerk's facsimile number is 850-410-1448.

Mediation is not available as an alternative remedy.

Your failure to submit a petition for hearing within 21 days from receipt of this order will constitute a waiver of your right to an administrative hearing, and this order shall become a 'final order'.

Should this order become a final order, a party who is adversely affected by it is entitled to judicial review pursuant to Section 120.68, Florida Statutes. Review proceedings are governed by the Florida Rules of Appellate Procedure. Such proceedings may be commenced by filing one copy of a Notice of Appeal with the Agency Clerk of the Department of Health and a second copy, accompanied by the filing fees required by law, with the Court of Appeal in the appropriate District Court. The notice must be filed within 30 days of rendition of the final order.

M20160014 61

NOTE: ALL SHEETS MUST BE REVIEWED

MIAMI-DADE COUNTY DEPARTMENT OF REGULATORY AND ECONOMIC RESOURCES

Herbert S. Saffir Permitting and Inspection Center

11805 SW 26th Street (Coral Way) • Miami, Florida 33175-2474 • (786) 315-2000

APPLICATION FOR MUNICIPAL PERMIT APPLICANTS THAT REQUIRE PLAN REVIEW FROM MIAMI-DADE FIRE RESCUE AND/OR ENVIRONMENTAL SERVICES

PROVIDE MUNICIPAL PROCESS NUMBER HERE

LOCATION OF IMPROVEMENTS

Job Address: 13940 ~~800~~ OLD CUTLER RD

Folio:

Lot: Block:

Subdivision: PBpg:

Metes and bounds:

CONTRACTOR INFORMATION

Contractor No.: DIY OWN

Last four (4) digits of Qualifier No.:

Contractor Name:

Qualifier Name:

Address:

City: State: Zip:

TYPE OF IMPROVEMENTS

[X] New Construction on Vacant Land
[ ] Alteration Interior
[ ] Alteration Exterior
[ ] Relocation of Structure
[ ] Enclosure
[ ] Repair
[ ] Repair Due to Fire
[ ] Demolish
[ ] Shell Only
[ ] Addition Attached
[ ] Addition Detached
[ ] Re-Roof
[ ] Foundation Only
[ ] Tent

Current use of property: VACANT

Description of Work: NEW SFR

Sq. Ft.: 6600 Units: Floors:

Value of Work: $700,000

PERMIT TYPE

[ ] MBLD* Category: 02
[ ] MELE
[ ] MPLU
[ ] MLPG
[ ] MMEC
[ ] FIRE

REVIEW STATUS

[ ] Chg. Contractor
[ ] Re-Issue
[ ] Re-Stamp
[ ] Revision
[ ] Not Applicable for Fire

OWNER'S NAME

Owner: ROGER SANCHEZ

Address: 13940 OLD CUTLER RD

City: MIAMI State: Zip:

Phone: 3/219 5466

Last four (4) digits of Owner's Social Security No.:

PERSON TO PICK UP PLANS

Name: RICK TORRENTE

Address: 14746 SW 61 CT

City: MIAMI State: FL Zip:

Phone: 3/970 9541

ARCHITECT / ENGINEER

Owner: DELLOW ARCHITECTURE

Address:

City: State: Zip:

Phone:

FIRE SPECIAL REQUEST PLAN REVIEW (SRI)

I am requesting a Special Request Plan Review (SRI) to be scheduled as soon as possible at the rate of $209 for the first hour and $71.50 per each additional hour in addition to the review fees. Minimum charge one-hour.

1st Request: Date:

2nd Request: Date:

3rd Request: Date:

PERA OPTIONAL PLAN REVIEW (OPR)

I am requesting Optional Plan Review (OPR) to be scheduled as soon as possible at the rate of $75 for each discipline. Additional review fees may apply.

1st Request: Date:

2nd Request: Date:

3rd Request: Date:

BUILDING PERMIT CATEGORIES

CATEGORY	DESCRIPTION	PERMIT TYPE
BUILDING		
01	GENERAL BUILDING—COMMERCIAL	MBLD
02	SUB—GENERAL BUILDING—RESIDENTIAL	MBLD
08	CANVAS AWNING	MBLD
10	COMMUNICATION TOWER	MBLD
15	DEMOLITION	MBLD
29	METAL AWNING & STORM SHUTTER	MBLD
48	SCREEN ENCLOSURES	MBLD
51	MURAL SIGNS (NON-ELECTRICAL)	MBLD
55	SWIMMING POOL	MBLD
56	TENNIS COURTS (SURFACE PAVING)	MBLD
86	TRAILER TIE DOWN	MBLD
88	WALK-IN COOLER	MBLD
91	MARINAS	MBLD
92	LOW SLOPE APPLICATIONS (GRAVEL, SMOOTH MODIFIED, SINGLE PLY)	MBLD
95	SHINGLES (ASPHALT, FIBERGLASS)	MBLD
96	SHINGLES (METAL ROOFS/WOOD SHINGLES & SHAKE)	MBLD
97	STAGE 2 VAPOR RECOVERY SYSTEM	MBLD
99	SOIL IMPROVEMENT	MBLD
0100	BULK STORAGE PROPANE TANK	MBLD
0101	REMOVABLE STORM PANELS	MBLD
0107	TILE ROOF	MBLD
0110	WATER MAIN	MBLD
0111	SITE PLAN	MBLD
0112	INDOOR EVENT/EXHIBIT	MBLD
ELECTRICAL		
04	FIRE ALARM SPECIALTY	MELE
16	SPECIALTY WIRING	MELE
38	GENERATORS	MELE
PLUMBING		
0024	INTERCEPTOR/GREASE TRAPS (REPLACEMENT OR INSTALLATION THAT IS NOT PART OF A BUILDING PERMIT)	MPLU
LPGX		
01	LIQUEFIED PETROLEUM GAS	MLPG
02	MISCELLANEOUS	MLPG
04	LIQUEFIED PETROL. GAS/STATE	MLPG
MECHANICAL		
09	ABOVE/BELOW GROUND TANKS/PUMPS & POLLUTANT STORAGE SYSTEM	MMEC
38	COMMERCIAL HOODS	MMEC
43	FIRE CHEMICAL	MMEC
46	SPRAY BOOTHS	MMEC
48	SMOKE CONTROL	MMEC
52	RESIDENTIAL ELEVATOR	MMEC
FIRE		
32	FIRE SPRINKLER	FIRE

STRUCTURAL CALCULATIONS

RESIDENCE LOCATED AT 13940 OLD CUTTLER ROAD PALMETO BAY, FLORIDA.

REVISION 1

PREPARED BY:

JOSE L. GUZMAN P.E.

4869 SW 75TH Ave, Miami, FL 33155

Tel.786.338.1082.

January 23, 2016

JOSE LUIS GUZMAN
LICENSE
No. 56138
STATE OF FLORIDA
PROFESSIONAL ENGINEER

1/22/16

Jose L. Guzman, P.E.
FL P.E. #56138

CITY OFPALMETTO BAY

January 22, 2016

Review Type: ***Structural***
Revision No. 1

1. .
   Response: Please see revised notes on s-5

2. .
   Response: Please see revised notes on s-5

3. .
   Response: Please see new footing schedule.

4. .
   Response: Please see revised footing schedule.

5. .
   Response: Please see revised roof framing plan

6. .
   Response: See revised roof framing plan

7. .
   Response: Please see attached wind load calculations.

8. .
   Response: Please see attached calculation for hanger.

MecaWind Std v2.2.6.1 per ASCE 7-10

Developed by MECA Enterprises, Inc. Copyright www.mecaenterprises.com

Date	: 1/21/2016	Project No.	: JobNo
Company Name	: True	Designed By	: Engineer
Address	: Address	Description	: Description
City	: City	Customer Name	: Customer
State	: State	Proj Location	: Location

File Location: C:\1-projects\`1-2015\1520-sanchez rodrigues\sanchez.wnd

Input Parameters: Directional Procedure All Heights Building (Ch 27 Part 1)

Basic Wind Speed(V)	=	175.00 mph			
Structural Category	=	II	Exposure Category	=	C
Natural Frequency	=	N/A	Flexible Structure	=	No
Importance Factor	=	1.00	Kd Directional Factor	=	0.85
Alpha	=	9.50	Zg	=	900.00 ft
At	=	0.11	Bt	=	1.00
Am	=	0.15	Bm	=	0.65
Cc	=	0.20	l	=	500.00 ft
Epsilon	=	0.20	Zmin	=	15.00 ft
Slope of Roof	=	6 : 12	Slope of Roof(Theta)	=	26.57 Deg
h: Mean Roof Ht	=	27.75 ft	Type of Roof	=	GABLED
RHt: Ridge Ht	=	34.50 ft	Eht: Eave Height	=	21.00 ft
OH: Roof Overhang at Eave	=	3.00 ft	Overhead Type	=	OH w/ soffit
Bldg Length Along Ridge	=	55.00 ft	Bldg Width Across Ridge	=	48.00 ft

Gust Factor Calculations

Gust Factor Category I Rigid Structures - Simplified Method

Gust1: For Rigid Structures (Nat. Freq.>1 Hz) use 0.85 = 0.85

Gust Factor Category II Rigid Structures - Complete Analysis

Zm:	0.6*Ht	=	16.65 ft
lzm:	Cc*(33/Zm)^0.167	=	0.22
Lzm:	l*(Zm/33)^Epsilon	=	436.06 ft
Q:	(1/(1+0.63*((B+Ht)/Lzm)^0.63))^0.5	=	0.91
Gust2:	0.925*((1+1.7*lzm*3.4*Q)/(1+1.7*3.4*lzm))	=	0.88

Gust Factor Summary

Not a Flexible Structure use the Lessor of Gust1 or Gust2 = 0.85

Table 26.11-1 Internal Pressure Coefficients for Buildings, GCpi

GCPi : Internal Pressure Coefficient = +/-0.18

Wind Pressurs Main Wind Force Resisting System (MWFRS) - Ref Figure 27.4-1

Kh:	2.01*(Ht/Zg)^(2/Alpha)	=	0.97
Kht:	Topographic Factor (Figure 6-4)	=	1.00
Qh:	.00256*(V)^2*I*Kh*Kht*Kd	=	38.64 psf
Cpww:	Windward Wall Cp(Ref Fig 6-6)	=	0.80
Roof Area		=	3320.56 ft^2
Reduction Factor based on Roof Area		=	0.80

MWFRS-Wall Pressures for Wind Normal to 55 ft Wall (Normal to Ridge)

All pressures shown are based upon ASD Design, with a Load Factor of .6

Wall	Cp	Pressure +GCpi (psf)	Pressure -GCpi (psf)
Leeward Wall	-0.50	-23.37	-9.47
Side Walls	-0.70	-29.94	-16.03

Wall	Elev ft	Kz	Kzt	Cp	qz psf	Press +GCpi	Press -GCpi	Total +/-GCpi
Windward	21.00	0.91	1.00	0.80	36.43	17.82	31.73	41.19
Windward	11.00	0.85	1.00	0.80	33.94	16.13	30.03	39.50
Windward	1.00	0.85	1.00	0.80	33.94	16.13	30.03	39.50

Roof Location	Cp	Pressure +GCpi(psf)	Pressure -GCpi(psf)
Windward - Min Cp	-0.30	-16.81	-2.90
Windward - Max Cp	0.18	-1.04	12.87
Leeward Norm to Ridge	-0.60	-26.66	-12.75

Overhang Bottom Side (Windward only)	0.80	24.77	24.77

Notes - Normal to Ridge

Note (1) Per Fig 27.4-1 Note 7, Since Theta > 10 Deg base calcs on Mean Ht
Note (2) Wall & Roof Pressures = Qh*(G*Cp - GCPi)
Note (3) +GCpi = Positive Internal Bldg Press, -GCPi = Negative Internal Bldg Press
Note (4) Total Pressure = Leeward Press + Windward Press (For + or - GCPi)
Note (5) Ref Fig 27.4-1, Normal to Ridge (Theta>=10), Theta= 26.6 Deg, h/l= 0.50
Note (6) Overhang bottom based upon windward wall Cp and GCpi = 0.

MWFRS-Wall Pressures for Wind Normal to 48 ft wall (Along Ridge)

All pressures shown are based upon ASD Design, with a Load Factor of .6

Wall	Cp	Pressure +GCpi (psf)	Pressure -GCpi (psf)
Leeward Wall	-0.47	-22.42	-8.51
Side Walls	-0.70	-29.94	-16.03

Wall	Elev ft	Kz	Kzt	Cp	qz psf	Press +GCpi	Press -GCpi	Total +/-GCpi
Windward	34.50	1.01	1.00	0.80	40.45	20.55	34.46	42.97
Windward	21.00	0.91	1.00	0.80	36.43	17.82	31.73	40.24
Windward	11.00	0.85	1.00	0.80	33.94	16.13	30.03	38.54
Windward	1.00	0.85	1.00	0.80	33.94	16.13	30.03	38.54

Roof - Dist from Windward Edge	Cp	Pressure +GCpi(psf)	Pressure -GCpi(psf)
Roof: 0.0 ft to 13.9 ft	-0.90	-36.55	-22.64
Roof: 13.9 ft to 27.8 ft	-0.90	-36.45	-22.54
Roof: 27.8 ft to 55.0 ft	-0.50	-23.43	-9.53

Notes - Along Ridge

Note (1) Ref Fig 27.4-1, Parallel to Ridge (All), h/l= 0.50

Wind Pressure on Components and Cladding (Ch 30 Part 1)

All pressures shown are based upon ASD Design, with a Load Factor of .6

Width of Pressure Coefficient Zone "a" = = 4.80 ft

Description	Width ft	Span ft	Area ft^2	Zone	Max GCp	Min GCp	Max P psf	Min P psf
truss	2.00	31.00	320.3	1	0.30	-0.80	18.54	-37.86
truss	2.00	31.00	320.3	2	0.30	-1.20	18.54	-53.32
truss	2.00	31.00	320.3	2H	0.30	-2.20	11.59	-85.00
wall20'	1.00	20.00	133.3	4	0.80	-0.90	37.91	-41.78
wall 12	1.00	12.00	48.0	4	0.88	-0.98	40.94	-44.80
wall 12	1.00	12.00	48.0	5	0.88	-1.16	40.94	-51.75
1	2.50	5.00	12.5	4	0.98	-1.08	44.93	-48.79
1	2.50	5.00	12.5	5	0.98	-1.37	44.93	-59.72
2	2.00	5.00	10.0	4	1.00	-1.10	45.59	-49.45
2	2.00	5.00	10.0	5	1.00	-1.40	45.59	-61.04
3	3.00	5.00	15.0	4	0.97	-1.07	44.39	-48.25
3	3.00	5.00	15.0	5	0.97	-1.34	44.39	-58.64
4	2.60	8.00	21.3	4	0.94	-1.04	43.34	-47.21
4	2.60	8.00	21.3	5	0.94	-1.28	43.34	-56.55
5	1.30	8.00	21.3	4	0.94	-1.04	43.34	-47.21
5	1.30	8.00	21.3	5	0.94	-1.28	43.34	-56.55
6	2.67	8.00	21.4	4	0.94	-1.04	43.34	-47.20
6	2.67	8.00	21.4	5	0.94	-1.28	43.34	-56.55
7	3.00	3.00	9.0	4	1.00	-1.10	45.59	-49.45
7	3.00	3.00	9.0	5	1.00	-1.40	45.59	-61.04
8	2.67	6.25	16.7	4	0.96	-1.06	44.07	-47.94
8	2.67	6.25	16.7	5	0.96	-1.32	44.07	-58.01

Khcc:Comp. & Clad. Table 6-3 Case 1 = 0.97
Qhcc:.00256*V^2*Khcc*Kht*Kd = 38.64 psf

(1) — 2.5 x 5
(2) — 2 x 5
(3) — 3 x 5
(4) — 2.6 x 8
(5) — 1.3 x 8
(6) — 2.67 x 8

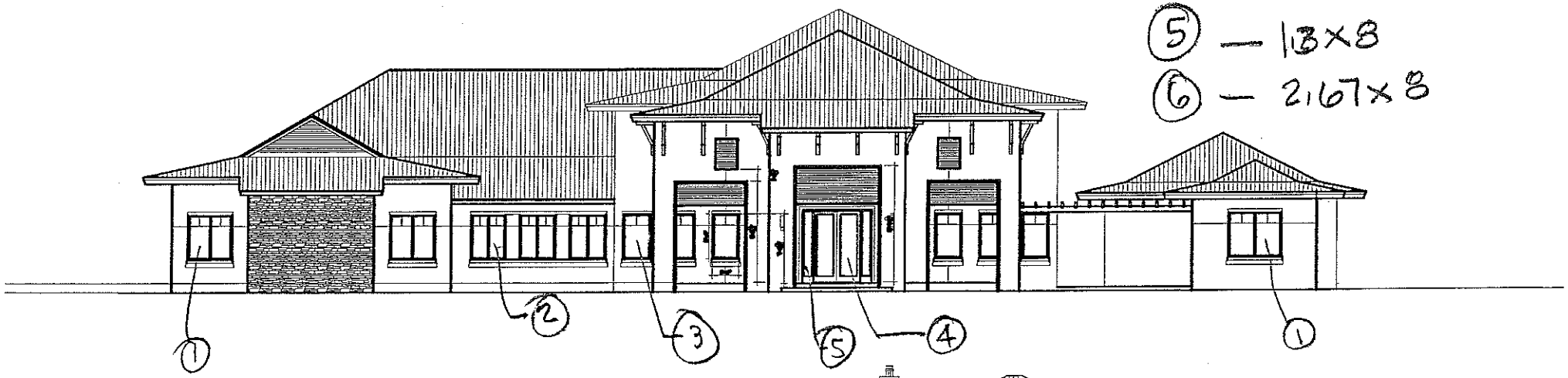

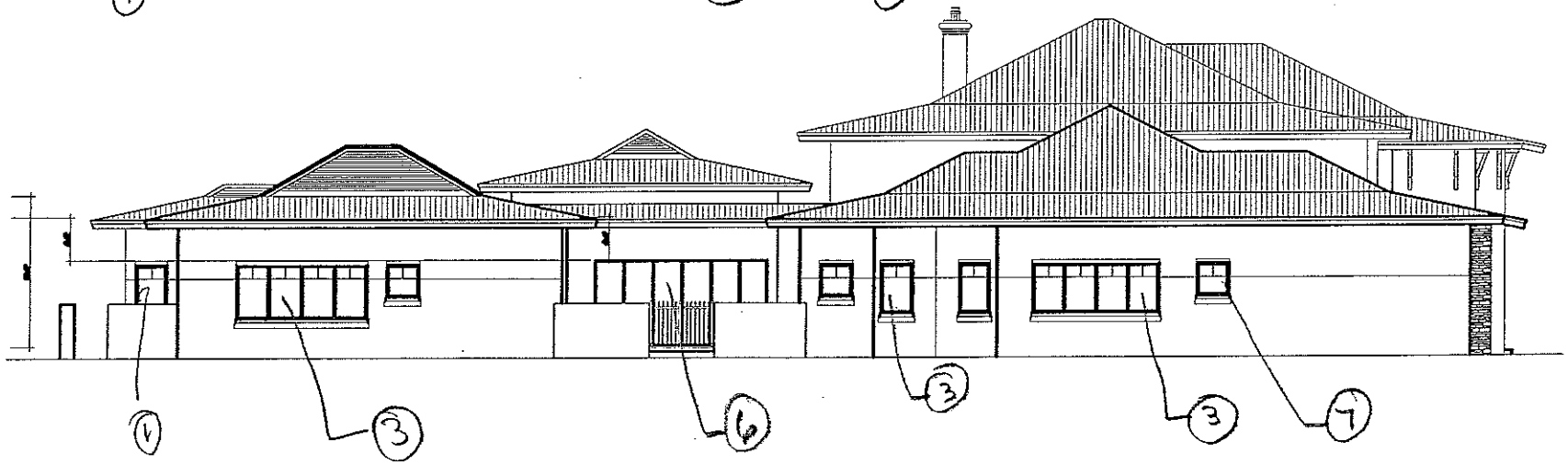

(7) 3 x 3

(8) 2.67 x 6.75

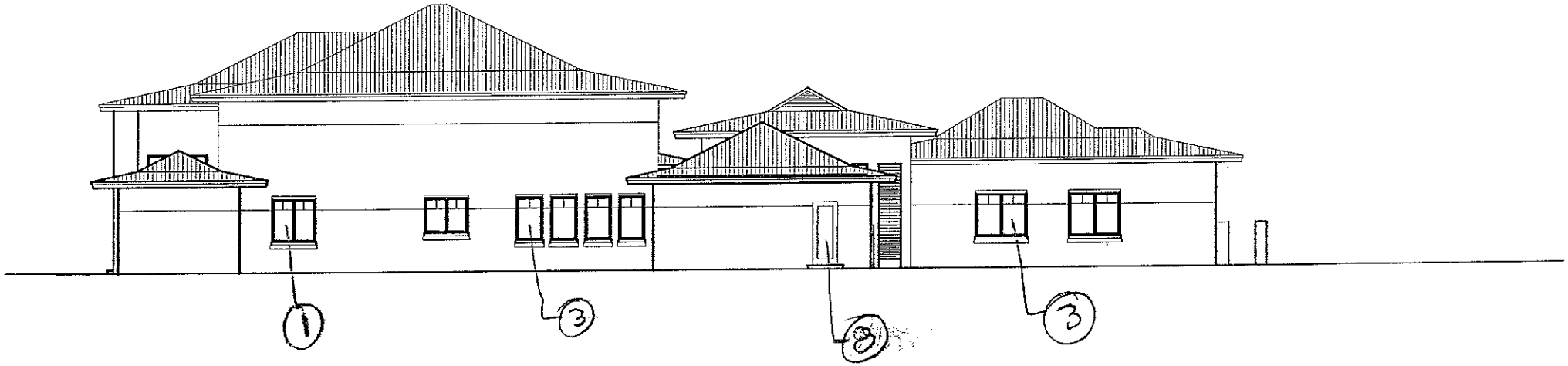

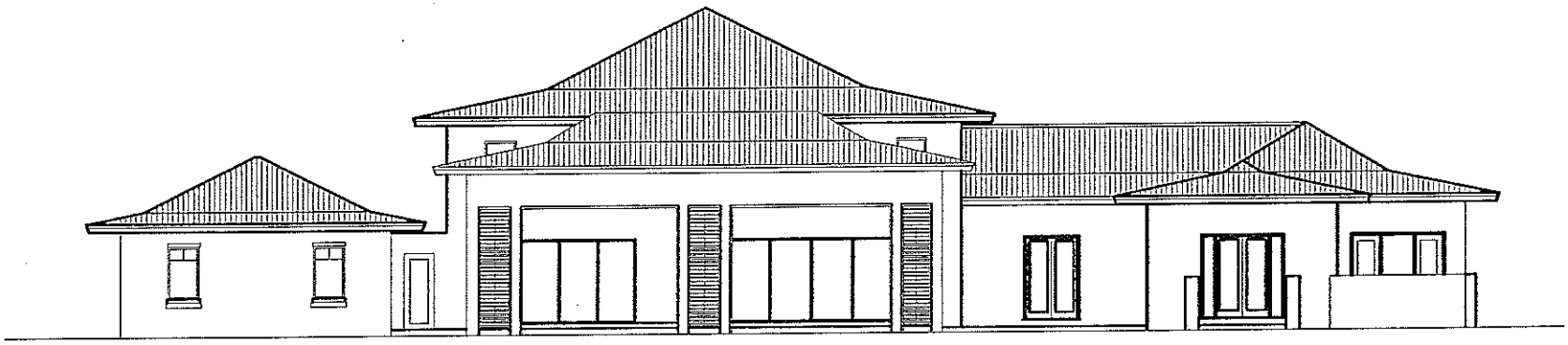

JOSE L. GUZMAN P.E.
4869 SW 75TH AVENUE
MIAMI, FLORIDA
PHONE 786 338 1082

JOB
SHEET NO. OF
CALCULATED BY DATE
CHECKED BY DATE
SCALE

COMMENT # 8

Uplift load = 2040#

Load ⊥ 41.78 × 20/2 × 2 = 835

Load ∥ = 389

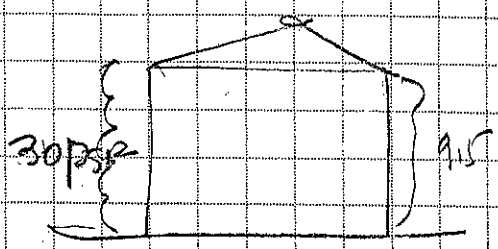

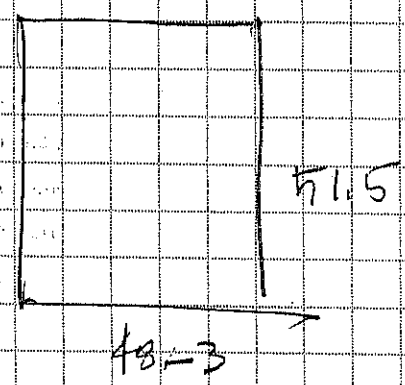

30 + 9.5 = 39.5 psf

39.5 psf × 20/2 = 395 plf

395 plf × 48.25/2 = 9529#

9529#/51.42 = 185.3 × 2 = 371

JOSE L. GUZMAN P.E.
4869 SW 75TH AVENUE
MIAMI, FLORIDA
PHONE 786 338 1082

JOB
SHEET NO. OF
CALCULATED BY DATE
CHECKED BY DATE
SCALE

TRUSS UNIT

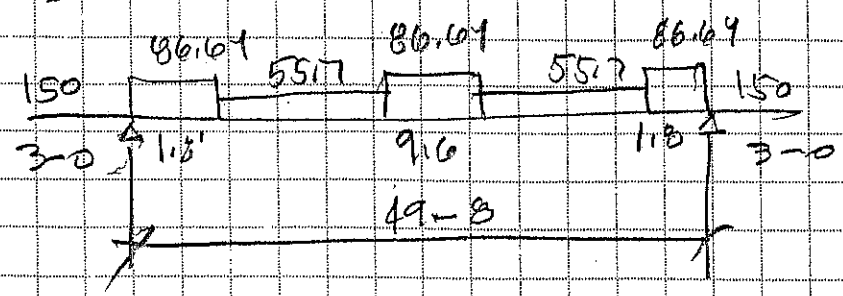

$V = 3 \times 150 + (1.8 + 4.8)\,86.64 + 18.235 \times 55.7$

$V = 2040\#.$

NVHT + NVHC −

$$\frac{2040}{3177+687} + \frac{371}{1575+407} + \frac{835}{2175+308} = 1.06$$

USE CMD EA SIDE

JOSE L. GUZMAN P.E.
4869 SW 75TH AVENUE
MIAMI, FLORIDA
PHONE 786 338 1082

JOB
SHEET NO. OF
CALCULATED BY DATE
CHECKED BY DATE
SCALE

UPLIFT — 2040#

$\perp$ $44.8 \times \frac{12}{2} = 268.8 \times 2 = 538$#.

$\parallel = 0$

$$\frac{2040}{3117} + \frac{538}{2175} + 0 = 0.902 \text{ ok}$$

Nu-Vue INDUSTRIES, Inc.

Manufacturers of Quality Structural & High Velocity Products

WOOD TO CONCRETE

18 Gauge NVHC 43M & NVHC 43-2M Hurricane Clip

		Fastners		Design Loads (lbs)		
Product Code	**Description**	**Masonry Header**	**Joist**	**Uplift**	**L1**	**L2**
NVHC 43	Hurricane Clip - Wide	4- ¼	9-10d	[4]687 per clip	407	308
NVHC 43-2	Hurricane Clip - Wide x2	4- ¼	10-10d	917	547	432

Notes:

1. ¼" Masonry fasteners. 1¼" embedment by IT Buildex Shallconform to Manufacturer's Published information.
2. Masonry Header can be hollow concrete blocks or grouted concrete Blocks or poured concrete beam.

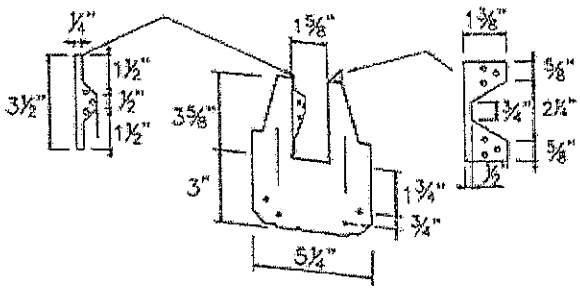

NVHC 43M

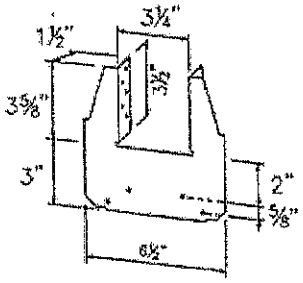

NVHC 43-2M

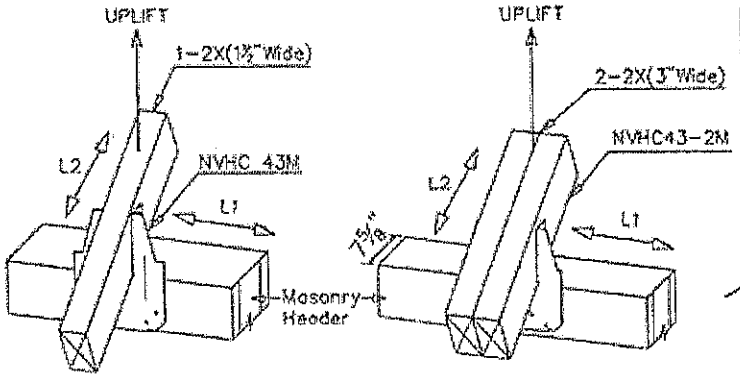

MPIN N. TOLAT, PE(CIVIL)
FL. REG. # 12847
15123 LANTERN CREEK LANE
HOUSTON, TX 77068

5/12/10

05-04-2010

FORM R405-2014

FLORIDA ENERGY EFFICIENCY CODE FOR BUILDING CONSTRUCTION

Florida Department of Business and Professional Regulation - Residential Performance Method

Project Name:	A CUSTOM RESIDENCE SANCHEZ - RODRIGUEZ	Builder Name:	
Street:	13940 OLD CUTTLER RD	Permit Office:	PALMETTO BAY
City, State, Zip:	PALMETTO BAY , FL ,	Permit Number:	
Owner:	MR r SANCHEZ AND MRS NOLAN RODRIGUEZ	Jurisdiction:	231000
Design Location:	FL, Miami		

1. New construction or existing	New (From Plans)
2. Single family or multiple family	Single-family
3. Number of units, if multiple family	1
4. Number of Bedrooms	5
5. Is this a worst case?	No
6. Conditioned floor area above grade (ft²)	6676
Conditioned floor area below grade (ft²)	0

7. Windows(1317.0 sqft.)

	Description	Area
a. U-Factor:	Sgl, U=1.06	1317.00 ft²
SHGC:	SHGC=0.43	
b. U-Factor:	N/A	ft²
SHGC:		
c. U-Factor:	N/A	ft²
SHGC:		
d. U-Factor:	N/A	ft²
SHGC:		

Area Weighted Average Overhang Depth: 3.134 ft.
Area Weighted Average SHGC: 0.430

8. Floor Types (6676.0 sqft.)

	Insulation	Area
a. Slab-On-Grade Edge Insulation	R=0.0	6676.00 ft²
b. N/A	R=	ft²
c. N/A	R=	ft²

9. Wall Types (5934.0 sqft.)

	Insulation	Area
a. Concrete Block - Int Insul, Exterior	R=4.1	5934.00 ft²
b. N/A	R=	ft²
c. N/A	R=	ft²
d. N/A	R=	ft²

10. Ceiling Types (6676.0 sqft.)

	Insulation	Area
a. Under Attic (Vented)	R=30.0	6676.00 ft²
b. N/A	R=	ft²
c. N/A	R=	ft²

11. Ducts

	R	ft²
a. Sup: Attic, Ret: Attic, AH: Master Bedroom	6	140
b. Sup: Attic, Ret: Attic, AH: Family Great	6	380
c. Sup: Attic, Ret: Attic, AH: Bedrooms Area	6	288

12. Cooling systems

	kBtu/hr	Efficiency
a. Central Unit	24.0	SEER:18.00
b. Central Unit	51.4	SEER:18.00
c. Central Unit	51.4	SEER:18.00

13. Heating systems

	kBtu/hr	Efficiency
a. Electric Strip Heat	17.0	COP:1.00
b. Electric Strip Heat	34.0	COP:1.00
c. Electric Strip Heat	34.0	COP:1.00

14. Hot water systems

a. Electric	Tankless	Cap: 1 gallons
b. Conservation features		EF: 0.970
None		

15. Credits Pstat

Glass/Floor Area: 0.197

Total Proposed Modified Loads: 218.85
Total Baseline Loads: 242.09

PASS

I hereby certify that the plans and specifications covered by this calculation are in compliance with the Florida Energy Code.

PREPARED BY:
DATE: 10.23.15

STATE OF FLORIDA
BERNARDO RODRIGUEZ
AR8737
REGISTERED ARCHITECT

I hereby certify that this building, as designed, is in compliance with the Florida Energy Code.

OWNER/AGENT:
DATE:

Review of the plans and specifications covered by this calculation indicates compliance with the Florida Energy Code. Before construction is completed this building will be inspected for compliance with Section 553.908 Florida Statutes.

GREAT SEAL OF THE STATE OF FLORIDA
IN GOD WE TRUST

BUILDING OFFICIAL:
DATE:

- **Compliance requires certification by the air handler unit manufacturer that the air handler enclosure qualifies as certified factory-sealed in accordance with R403.2.2.1.**
- **Compliance requires an Air Barrier and Insulation Inspection Checklist in accordance with R402.4.1.1 and an envelope leakage test report in accordance with R402.4.1.2.**
- **Compliance with a proposed duct leakage Qn requires a Duct Leakage Test Report confirming duct leakage to outdoors, tested in accordance with Section 803 of RESNET Standards, is not greater than 0.017 Qn for whole house.**

FORM R405-2014

PROJECT

Title:	A CUSTOM RESIDENCE SA	Bedrooms:	5	Address Type:	Street Address
Building Type:	User	Conditioned Area:	6676	Lot #	
Owner:	MR r SANCHEZ AND MRS N	Total Stories:	1	Block/SubDivision:	
# of Units:	1	Worst Case:	No	PlatBook:	
Builder Name:		Rotate Angle:	0	Street:	13940 OLD CUTTLER
Permit Office:	PALMETTO BAY	Cross Ventilation:		County:	DADE
Jurisdiction:	231000	Whole House Fan:		City, State, Zip:	PALMETTO BAY , FL ,
Family Type:	Single-family				
New/Existing:	New (From Plans)				
Comment:					

CLIMATE

√	Design Location	TMY Site	IECC Zone	Design Temp 97.5 %	Design Temp 2.5 %	Int Design Temp Winter	Int Design Temp Summer	Heating Degree Days	Design Moisture	Daily Temp Range
____	FL, Miami	FL_MIAMI_INTL_AP	1	51	90	70	75	149.5	56	Low

BLOCKS

Number	Name	Area	Volume
1	Block1	1190	14280
2	Block2	2878	51804
3	Block3	2608	46944

SPACES

Number	Name	Area	Volume	Kitchen	Occupants	Bedrooms	Infil ID	Finished	Cooled	Heated
1	Master Bedroom	1190	14280	No	2	1	1	Yes	Yes	Yes
2	Family Great	2878	51804	Yes	1	0	1	Yes	Yes	Yes
3	Bedrooms Area	2608	46944	No	4	4	1	Yes	Yes	Yes

FLOORS

√	#	Floor Type	Space	Perimeter	Perimeter R-Value	Area	Joist R-Value	Tile	Wood	Carpet
____	1	Slab-On-Grade Edge Insulatio	Master Bedroom	112 ft	0	1190 ft²	----	0	0	1
____	2	Slab-On-Grade Edge Insulatio	Family Great	176 ft	0	2878 ft²	----	0	0	1
____	3	Slab-On-Grade Edge Insulatio	Bedrooms Area	163 ft	0	2608 ft²	----	0	0	1

ROOF

√	#	Type	Materials	Roof Area	Gable Area	Roof Color	Solar Absor.	SA Tested	Emitt	Emitt Tested	Deck Insul.	Pitch (deg)
____	1	Hip	Metal	7231 ft²	0 ft²	Light	0.6	No	0.9	No	0	22.6

ATTIC

√	#	Type	Ventilation	Vent Ratio (1 in)	Area	RBS	IRCC
____	1	Full attic	Vented	300	6676 ft²	N	N

FORM R405-2014

CEILING

√	#	Ceiling Type	Space	R-Value	Area	Framing Frac	Truss Type
____	1	Under Attic (Vented)	Master Bedroom	30	1190 ft²	0.11	Wood
____	2	Under Attic (Vented)	Family Great	30	2878 ft²	0.11	Wood
____	3	Under Attic (Vented)	Bedrooms Area	30	2608 ft²	0.11	Wood

WALLS

√	#	Ornt	Adjacent To	Wall Type	Space	Cavity R-Value	Width Ft In	Height Ft In	Area	Sheathing R-Value	Framing Fraction	Solar Absor.	Below Grade%
____	1	SE	Exterior	Concrete Block - Int Ins	Bedrooms Ar	4.1	49	12	588.0 ft²		0	0.3	0
____	2	SE	Exterior	Concrete Block - Int Ins	Family Great	4.1	49	18	882.0 ft²		0	0.3	0
____	3	NE	Exterior	Concrete Block - Int Ins	Family Great	4.1	60	18	1080.0 ft²		0	0.3	0
____	4	NE	Exterior	Concrete Block - Int Ins	Bedrooms Ar	4.1	28	12	336.0 ft²		0	0.3	0
____	5	NE	Exterior	Concrete Block - Int Ins	Master Bedro	4.1	40	12	480.0 ft²		0	0.3	0
____	6	NW	Exterior	Concrete Block - Int Ins	Family Great	4.1	64	12	768.0 ft²		0	0.3	0
____	7	NW	Exterior	Concrete Block - Int Ins	Master Bedro	4.1	30	12	360.0 ft²		0	0.3	0
____	8	SW	Exterior	Concrete Block - Int Ins	Master Bedro	4.1	38	12	456.0 ft²		0	0.3	0
____	9	SW	Exterior	Concrete Block - Int Ins	Bedrooms Ar	4.1	82	12	984.0 ft²		0	0.3	0

DOORS

√	#	Ornt	Door Type	Space	Storms	U-Value	Width Ft In	Height Ft In	Area
____	1	SE	Wood	Family Great	None	.46	6	8	48 ft²

WINDOWS

Orientation shown is the entered, Proposed orientation.

√	#	Ornt	Wall ID	Frame	Panes	NFRC	U-Factor	SHGC	Area	Overhang Depth	Overhang Separation	Int Shade	Screening
____	1	SE	1	Metal	Single (Tinted)	Yes	1.06	0.43	60.0 ft²	3 ft 0 in	6 ft 0 in	None	None
____	2	SE	1	Metal	Single (Tinted)	Yes	1.06	0.43	50.0 ft²	3 ft 0 in	8 ft 0 in	None	None
____	3	SE	2	Metal	Single (Tinted)	Yes	1.06	0.43	120.0 ft²	3 ft 0 in	14 ft 0 in	None	None
____	4	SE	2	Metal	Single (Tinted)	Yes	1.06	0.43	16.0 ft²	14 ft 0 in	16 ft 0 in	None	None
____	5	SE	2	Metal	Single (Tinted)	Yes	1.06	0.43	25.0 ft²	3 ft 0 in	16 ft 0 in	None	None
____	6	SE	2	Metal	Single (Tinted)	Yes	1.06	0.43	20.0 ft²	3 ft 0 in	15 ft 0 in	None	None
____	7	SE	2	Metal	Single (Tinted)	Yes	1.06	0.43	60.0 ft²	3 ft 0 in	15 ft 0 in	None	None
____	8	NE	4	Metal	Single (Tinted)	Yes	1.06	0.43	128.0 ft²	3 ft 0 in	11 ft 0 in	None	None
____	9	NE	5	Metal	Single (Tinted)	Yes	1.06	0.43	53.0 ft²	3 ft 0 in	8 ft 0 in	None	None
____	10	NW	6	Metal	Single (Tinted)	Yes	1.06	0.43	112.0 ft²	3 ft 0 in	10 ft 0 in	None	None
____	11	NW	6	Metal	Single (Tinted)	Yes	1.06	0.43	192.0 ft²	3 ft 0 in	10 ft 0 in	None	None
____	12	NW	6	Metal	Single (Tinted)	Yes	1.06	0.43	40.0 ft²	3 ft 0 in	11 ft 0 in	None	None
____	13	NW	7	Metal	Single (Tinted)	Yes	1.06	0.43	64.0 ft²	3 ft 0 in	11 ft 0 in	None	None
____	14	NW	7	Metal	Single (Tinted)	Yes	1.06	0.43	72.0 ft²	3 ft 0 in	11 ft 0 in	None	None
____	15	SW	8	Metal	Single (Tinted)	Yes	1.06	0.43	60.0 ft²	3 ft 0 in	9 ft 0 in	None	None
____	16	SW	8	Metal	Single (Tinted)	Yes	1.06	0.43	9.0 ft²	3 ft 0 in	6 ft 0 in	None	None
____	17	SW	9	Metal	Single (Tinted)	Yes	1.06	0.43	128.0 ft²	3 ft 0 in	11 ft 0 in	None	None
____	18	SW	9	Metal	Single (Tinted)	Yes	1.06	0.43	60.0 ft²	3 ft 0 in	9 ft 0 in	None	None
____	19	SW	9	Metal	Single (Tinted)	Yes	1.06	0.43	18.0 ft²	3 ft 0 in	6 ft 0 in	None	None

FORM R405-2014

WINDOWS

Orientation shown is the entered, Proposed orientation.

√	#	Ornt	Wall ID	Frame	Panes	NFRC	U-Factor	SHGC	Area	Overhang Depth	Overhang Separation	Int Shade	Screening
_____	20	SW	9	Metal	Single (Tinted)	Yes	1.06	0.43	30.0 ft²	3 ft 0 in	7 ft 0 in	None	None

INFILTRATION

#	Scope	Method	SLA	CFM 50	ELA	EqLA	ACH	ACH 50
1	Wholehouse	Proposed CFM(50)	.000000	5	.27	.52	.0002	.0027

HEATING SYSTEM

√	#	System Type	Subtype	Efficiency	Capacity	Block	Ducts
_____	1	Electric Strip Heat	None	COP:1	17 kBtu/hr	1	sys#1
_____	2	Electric Strip Heat	None	COP:1	34 kBtu/hr	2	sys#2
_____	3	Electric Strip Heat	None	COP:1	34 kBtu/hr	3	sys#3

COOLING SYSTEM

√	#	System Type	Subtype	Efficiency	Capacity	Air Flow	SHR	Block	Ducts
_____	1	Central Unit	None	SEER: 18	24 kBtu/hr	720 cfm	0.6	1	sys#1
_____	2	Central Unit	None	SEER: 18	51.4 kBtu/hr	1542 cfm	0.6	2	sys#2
_____	3	Central Unit	None	SEER: 18	51.4 kBtu/hr	1542 cfm	0.76	3	sys#3

HOT WATER SYSTEM

√	#	System Type	SubType	Location	EF	Cap	Use	SetPnt	Conservation
_____	1	Electric	Tankless	Family Great	0.97	1 gal	80 gal	120 deg	None

SOLAR HOT WATER SYSTEM

√	FSEC Cert #	Company Name	System Model #	Collector Model #	Collector Area	Storage Volume	FEF
_____	None	None			ft²		

DUCTS

√	#	---- Supply ---- Location	R-Value	Area	---- Return ---- Location	Area	Leakage Type	Air Handler	CFM 25 TOT	CFM25 OUT	QN	RLF	HVAC # Heat	HVAC # Cool
_____	1	Attic	6	140 ft²	Attic	54 ft²	Prop. Leak Free	Master Bed	--- cfm	35.7 cfm	0.03	0.60	1	1
_____	2	Attic	6	380 ft²	Attic	90 ft²	Default Leakage	Family Gre	(Default)	(Default)			2	2
_____	3	Attic	6	288 ft²	Attic	80 ft²	Prop. Leak Free	Bedrooms	--- cfm	78.2 cfm	0.03	0.60	3	3

FORM R405-2014

TEMPERATURES

Programable Thermostat: Y

Ceiling Fans:

	Jan	Feb	Mar	Apr	May	Jun	Jul	Aug	Sep	Oct	Nov	Dec
Cooling	[ ]	[ ]	[ ]	[ ]	[ ]	[X]	[X]	[X]	[X]	[ ]	[ ]	[ ]
Heating	[X]	[X]	[X]	[ ]	[ ]	[ ]	[ ]	[ ]	[ ]	[ ]	[X]	[X]
Venting	[ ]	[ ]	[X]	[X]	[ ]	[ ]	[ ]	[ ]	[ ]	[X]	[X]	[ ]

Thermostat Schedule: HERS 2006 Reference

Hours

Schedule Type		1	2	3	4	5	6	7	8	9	10	11	12
Cooling (WD)	AM	78	78	78	78	78	78	78	78	80	80	80	80
	PM	80	80	78	78	78	78	78	78	78	78	78	78
Cooling (WEH)	AM	78	78	78	78	78	78	78	78	78	78	78	78
	PM	78	78	78	78	78	78	78	78	78	78	78	78
Heating (WD)	AM	66	66	66	66	66	68	68	68	68	68	68	68
	PM	68	68	68	68	68	68	68	68	68	68	66	66
Heating (WEH)	AM	66	66	66	66	66	68	68	68	68	68	68	68
	PM	68	68	68	68	68	68	68	68	68	68	66	66

MECHANICAL VENTILATION

Type	Supply CFM	Exhaust CFM	Fan Watts	HRV	Heating System	Run Time	Cooling System
Runtime Vent w/ Min	50	0		0	1 - Electric Strip Heat	%	1 - Central Unit
Runtime Vent w/ Min	50	0		0	2 - Electric Strip Heat	%	2 - Central Unit
Runtime Vent w/ Min	50	0		0	3 - Electric Strip Heat	%	3 - Central Unit

FORM R405-2014

TABLE 402.4.1.1

AIR BARRIER AND INSULATION INSPECTION COMPONENT CRITERIA

Project Name:	A CUSTOM RESIDENCE SANCHEZ - RODRIGUEZ	Builder Name:	
Street:	13940 OLD CUTTLER RD	Permit Office:	PALMETTO BAY
City, State, Zip:	PALMETTO BAY , FL ,	Permit Number:	
Owner:	MR r SANCHEZ AND MRS NOLAN RODRIGUEZ	Jurisdiction:	231000
Design Location:	FL, Miami		

COMPONENT	CRITERIA	CHECK
Air barrier and thermal barrier	A continuous air barrier shall be installed in the building envelope. Exterior thermal envelope contains a continuous barrier. Breaks or joints in the air barrier shall be sealed. Air-permeable insulation shall not be used as a sealing material.	✓
Ceiling/attic	The air barrier in any dropped ceiling/soffit shall be aligned with the insulation and any gaps in the air barrier shall be sealed. Access openings, drop down stairs or knee wall doors to unconditioned attic spaces shall be sealed.	✓
Walls	Corners and headers shall be insulated and the junction of the foundation and sill plate shall be sealed. The junction of the top plate and the top or exterior walls shall be sealed. Exterior thermal envelope insulation for framed walls shall be installed in substantial contact and continuous alignment with the air barrier. Knee walls shall be sealed.	✓
Windows, skylights and doors	The space between window/door jambs and framing and skylights and framing shall be sealed.	✓
Rim joists	Rim joists are insulated and include an air barrier.	—
Floors (including above-garage and cantilevered floors)	Insulation shall be installed to maintain permanent contact with underside of subfloor decking. The air barrier shall be installed at any exposed edge of insulation.	✓
Crawl space walls	Where provided in lieu of floor insulation, insulation shall be permanently attached to the crawlspace walls. Exposed earth in unvented crawl spaces shall be covered with a Class I vapor retarder with overlapping joints taped.	—
Shafts, penetrations	Duct shafts, utility penetrations, and flue shaft openings to exterior or unconditioned space shall be sealed.	✓
Narrow cavities	Batts in narrow cavities shall be cut to fit, or narrow cavities shall be filled by insulation that on installation readily conforms to the available cavity spaces.	✓
Garage separation	Air sealing shall be provided between the garage and conditioned spaces.	✓
Recessed lighting	Recessed light fixtures installed in the building thermal envelope shall be air tight, IC rated, and sealed to the drywall.	✓
Plumbing and wiring	Batt insulation shall be cut neatly to fit around wiring and plumbing in exterior walls, or insulation that on installation readily conforms to available space shall extend behind piping and wiring.	✓
Shower/tub on exterior wall	Exterior walls adjacent to showers and tubs shall be insulated and the air barrier installed separating them from the showers and tubs.	✓
Electrical/phone box on	The air barrier shall be installed behind electrical or communication boxes or air sealed boxes shall be installed.	✓
HVAC register boots	HVAC register boots that penetrate building thermal envelope shall be sealed to the sub-floor or drywall.	✓
Fireplace	An air barrier shall be installed on fireplace walls. Fireplaces shall have gasketed doors	—

FORM R405-2014

ENERGY PERFORMANCE LEVEL (EPL) DISPLAY CARD

ESTIMATED ENERGY PERFORMANCE INDEX* = 90

The lower the EnergyPerformance Index, the more efficient the home.

13940 OLD CUTTLER RD, PALMETTO BAY, FL,

1. New construction or existing	New (From Plans)
2. Single family or multiple family	Single-family
3. Number of units, if multiple family	1
4. Number of Bedrooms	5
5. Is this a worst case?	No
6. Conditioned floor area (ft²)	6676

7. Windows**	Description	Area
a. U-Factor:	Sgl, U=1.06	1317.00 ft²
SHGC:	SHGC=0.43	
b. U-Factor:	N/A	ft²
SHGC:		
c. U-Factor:	N/A	ft²
SHGC:		
d. U-Factor:	N/A	ft²
SHGC:		

Area Weighted Average Overhang Depth: 3.134 ft.
Area Weighted Average SHGC: 0.430

8. Floor Types	Insulation	Area
a. Slab-On-Grade Edge Insulation	R=0.0	6676.00 ft²
b. N/A	R=	ft²
c. N/A	R=	ft²

9. Wall Types	Insulation	Area
a. Concrete Block - Int Insul, Exterior	R=4.1	5934.00 ft²
b. N/A	R=	ft²
c. N/A	R=	ft²
d. N/A	R=	ft²

10. Ceiling Types	Insulation	Area
a. Under Attic (Vented)	R=30.0	6676.00 ft²
b. N/A	R=	ft²
c. N/A	R=	ft²

11. Ducts	R	ft²
a. Sup: Attic, Ret: Attic, AH: Master Bedroom	6	140
b. Sup: Attic, Ret: Attic, AH: Family Great	6	380
c. Sup: Attic, Ret: Attic, AH: Bedrooms Area	6	288

12. Cooling systems	kBtu/hr	Efficiency
a. Central Unit	24.0	SEER:18.00
b. Central Unit	51.4	SEER:18.00
c. Central Unit	51.4	SEER:18.00

13. Heating systems	kBtu/hr	Efficiency
a. Electric Strip Heat	17.0	COP:1.00
b. Electric Strip Heat	34.0	COP:1.00
c. Electric Strip Heat	34.0	COP:1.00

14. Hot water systems	
a. Electric	Cap: 1 gallons EF: 0.97
b. Conservation features None	

15. Credits Pstat

I certify that this home has complied with the Florida Energy Efficiency Code for Building Construction through the above energy saving features which will be installed (or exceeded) in this home before final inspection. Otherwise, a new EPL Display Card will be completed based on installed Code compliant features.

STATE OF FLORIDA
ROLDO ROLON
AR8737
REGISTERED ARCHITECT

Builder Signature: _____ Date: 10.22.11

Address of New Home: _____ City/FL Zip: _____

GREAT SEAL OF THE STATE OF FLORIDA
IN GOD WE TRUST

*Note: This is not a Building Energy Rating. If your Index is below 70, your home may qualify for energy efficient mortgage (EEM) incentives if you obtain a Florida EnergyGauge Rating. Contact the EnergyGauge Hotline at (321) 638-1492 or see the EnergyGauge web site at energygauge.com for information and a list of certified Raters. For information about the Florida Building Code, Energy Conservation, contact the Florida Building Commission's support staff.

**Label required by Section R303.1.3 of the Florida Building Code, Energy Conservation, if not DEFAULT.

Residential System Sizing Calculation

Summary

MR r SANCHEZ AND MRS NOLAN RODRIGUEZ Project Title:
13940 OLD CUTTLER RD A CUSTOM RESIDENCE SANCHEZ - RODRIGUEZ
PALMETTO BAY, FL

10/21/2015

Location for weather data: Miami, FL - Defaults: Latitude(25.82) Altitude(7 ft.) Temp Range(L)					
Humidity data: Interior RH (50%) Outdoor wet bulb (77F) Humidity difference(56gr.)					
Winter design temperature(TMY3 99%)	49	F	Summer design temperature(TMY3 99%)	92	F
Winter setpoint	70	F	Summer setpoint	75	F
Winter temperature difference	21	F	Summer temperature difference	17	F
Total heating load calculation	**71546**	**Btuh**	**Total cooling load calculation**	**123095**	**Btuh**
Submitted heating capacity	% of calc	Btuh	Submitted cooling capacity	% of calc	Btuh
Total (Electric Strip Heat)	118.8	85000	Sensible (SHR = 0.66)	79.6	84304
			Latent	247.5	42496
			Total	103.0	126800

WINTER CALCULATIONS

Winter Heating Load (for 6676 sqft)

Load component			Load	
Window total	1317	sqft	29316	Btuh
Wall total	4569	sqft	14319	Btuh
Door total	48	sqft	464	Btuh
Ceiling total	6676	sqft	4465	Btuh
Floor total	See detail report		11176	Btuh
Infiltration	0	cfm	0	Btuh
Duct loss			8342	Btuh
Subtotal			**68082**	**Btuh**
Ventilation	150	cfm	3464	Btuh
TOTAL HEAT LOSS			**71546**	**Btuh**

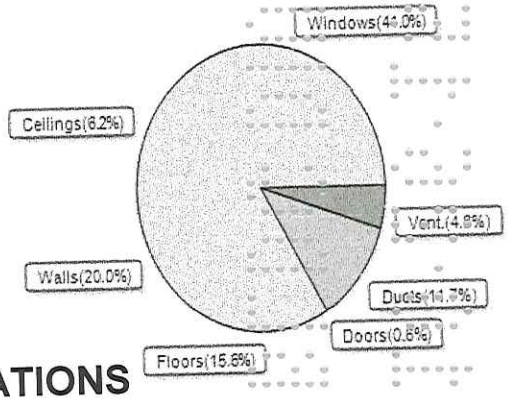

SUMMER CALCULATIONS

Summer Cooling Load (for 6676 sqft)

Load component			Load	
Window total	1317	sqft	62947	Btuh
Wall total	4569	sqft	11591	Btuh
Door total	48	sqft	707	Btuh
Ceiling total	6676	sqft	9780	Btuh
Floor total			0	Btuh
Infiltration	0	cfm	0	Btuh
Internal gain			9210	Btuh
Duct gain			8884	Btuh
Sens. Ventilation	150	cfm	2804	Btuh
Blower Load			0	Btuh
Total sensible gain			**105923**	**Btuh**
Latent gain(ducts)			2461	Btuh
Latent gain(infiltration)			0	Btuh
Latent gain(ventilation)			5711	Btuh
Latent gain(internal/occupants/other)			9000	Btuh
Total latent gain			**17171**	**Btuh**
TOTAL HEAT GAIN			**123095**	**Btuh**

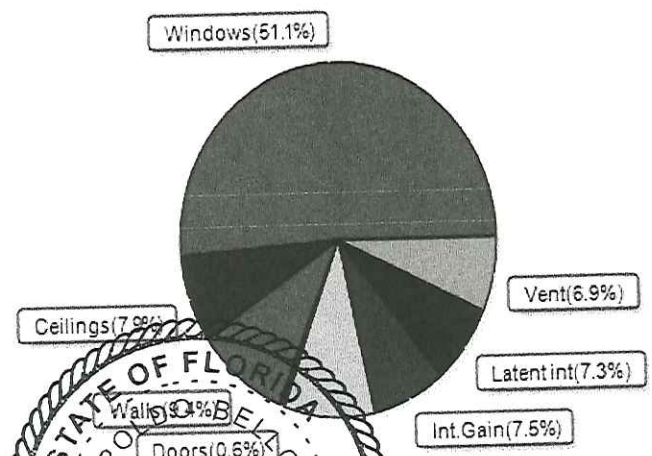

STATE OF FLORIDA
LEOPOLDO BELLO
AB 8737
REGISTERED ARCHITECT

EnergyGauge® System Sizing
PREPARED BY:
DATE: 10-22-15

Powered by ACCA MANUAL J

8th Edition

System Sizing Calculations - Winter

Residential Load - Room by Room Component Details

MR r SANCHEZ AND MRS NOLAN RODRIGUEZ Project Title:
13940 OLD CUTTLER RD A CUSTOM RESIDENCE SANCHEZ - RODRIGUEZ
PALMETTO BAY, FL Building Type: User

10/21/2015

Reference City: Miami, FL (Defaults) Winter Temperature Difference: 21.0 F (TMY3 99%)

Component Loads for Room #1: Master Bedroom

Window	Panes/Type	Frame	U	Orientation	Area(sqft) X	HTM=	Load
9	1, NFRC 0.43	Metal	1.06	NE	53.0	22.3	1180 Btuh
13	1, NFRC 0.43	Metal	1.06	NW	64.0	22.3	1425 Btuh
14	1, NFRC 0.43	Metal	1.06	NW	72.0	22.3	1603 Btuh
15	1, NFRC 0.43	Metal	1.06	SW	60.0	22.3	1336 Btuh
16	1, NFRC 0.43	Metal	1.06	SW	9.0	22.3	200 Btuh
	Window Total				258.0(sqft)		5743 Btuh
Walls	Type	Ornt.	Ueff.	R-Value (Cav/Sh)	Area X	HTM=	Load
5	Conc Blk,Hollow	- Ext	(0.149)	4.1/0.0	427	3.13	1338 Btuh
7	Conc Blk,Hollow	- Ext	(0.149)	4.1/0.0	224	3.13	702 Btuh
8	Conc Blk,Hollow	- Ext	(0.149)	4.1/0.0	387	3.13	1213 Btuh
	Wall Total				1038(sqft)		3253 Btuh
Ceilings	Type/Color/Surface		Ueff.	R-Value	Area X	HTM=	Load
1	Vented Attic/L/Metal		(0.032)	30.0/0.0	1190	0.7	796 Btuh
	Ceiling Total				1190(sqft)		796 Btuh
Floors	Type		Ueff.	R-Value	Size X	HTM=	Load
1	Slab On Grade		(1.180)	0.0	112.0 ft(perim.)	24.8	2775 Btuh
	Floor Total				1190 sqft		2775 Btuh
					Room Envelope Subtotal:		12567 Btuh
Infiltration	Type	Wholehouse	ACH	Room Volume	Wall Ratio	CFM=	
	Natural(Adjusted for ventilation)		0.00	14280	0.23	0.0	0 Btuh
Duct load	Extremely sealed, Supply(R6.0-Attic), Return(R6.0-Attic)					(DLM of 0.096)	1211 Btuh
Room #1					**Sensible Room Subtotal**		**13778 Btuh**

Manual J Winter Calculations

Residential Load - Component Details (continued)

MR r SANCHEZ AND MRS NOLAN RODRIGUEZ Project Title:
13940 OLD CUTTLER RD A CUSTOM RESIDENCE SANCHEZ - RODRIGUEZ
PALMETTO BAY, FL Building Type: User

10/21/2015

Component Loads for Room #2: Family Great

Window	Panes/Type	Frame	U	Orientation	Area(sqft) X	HTM=	Load
3	1, NFRC 0.43	Metal	1.06	SE	120.0	22.3	2671 Btuh
4	1, NFRC 0.43	Metal	1.06	SE	16.0	22.3	356 Btuh
5	1, NFRC 0.43	Metal	1.06	SE	25.0	22.3	556 Btuh
6	1, NFRC 0.43	Metal	1.06	SE	20.0	22.3	445 Btuh
7	1, NFRC 0.43	Metal	1.06	SE	60.0	22.3	1336 Btuh
10	1, NFRC 0.43	Metal	1.06	NW	112.0	22.3	2493 Btuh
11	1, NFRC 0.43	Metal	1.06	NW	192.0	22.3	4274 Btuh
12	1, NFRC 0.43	Metal	1.06	NW	40.0	22.3	890 Btuh
	Window Total				585.0(sqft)		13022 Btuh
Walls	Type	Ornt.	Ueff.	R-Value (Cav/Sh)	Area X	HTM=	Load
2	Conc Blk,Hollow	- Ext	(0.149)	4.1/0.0	593	3.13	1858 Btuh
3	Conc Blk,Hollow	- Ext	(0.149)	4.1/0.0	1080	3.13	3385 Btuh
6	Conc Blk,Hollow	- Ext	(0.149)	4.1/0.0	424	3.13	1329 Btuh
	Wall Total				2097(sqft)		6572 Btuh
Doors	Type	Storm	Ueff.		Area X	HTM=	Load
1	Wood - Exterior,	n	(0.460)		48	9.7	464 Btuh
	Door Total				48(sqft)		464Btuh
Ceilings	Type/Color/Surface		Ueff.	R-Value	Area X	HTM=	Load
2	Vented Attic/L/Metal		(0.032)	30.0/0.0	2878	0.7	1925 Btuh
	Ceiling Total				2878(sqft)		1925Btuh
Floors	Type		Ueff.	R-Value	Size X	HTM=	Load
2	Slab On Grade		(1.180)	0.0	176.0 ft(perim.)	24.8	4361 Btuh
	Floor Total				2878 sqft		4361 Btuh
				Room Envelope Subtotal:			26344 Btuh
Infiltration	Type	Wholehouse	ACH	Room Volume	Wall Ratio	CFM=	
	Natural(Adjusted for ventilation)		0.00	51804	0.46	0.0	0 Btuh
Duct load	Average sealed, Supply(R6.0-Attic), Return(R6.0-Attic)					(DLM of 0.175)	4601 Btuh
Room #2				**Sensible Room Subtotal**			**30945 Btuh**

Manual J Winter Calculations

Residential Load - Component Details (continued)

MR r SANCHEZ AND MRS NOLAN RODRIGUEZ Project Title:
13940 OLD CUTTLER RD A CUSTOM RESIDENCE SANCHEZ - RODRIGUEZ
PALMETTO BAY, FL Building Type: User

10/21/2015

Component Loads for Room #3: Bedrooms Area

Window	Panes/Type	Frame	U	Orientation	Area(sqft) X	HTM=	Load
1	1, NFRC 0.43	Metal	1.06	SE	60.0	22.3	1336 Btuh
2	1, NFRC 0.43	Metal	1.06	SE	50.0	22.3	1113 Btuh
8	1, NFRC 0.43	Metal	1.06	NE	128.0	22.3	2849 Btuh
17	1, NFRC 0.43	Metal	1.06	SW	128.0	22.3	2849 Btuh
18	1, NFRC 0.43	Metal	1.06	SW	60.0	22.3	1336 Btuh
19	1, NFRC 0.43	Metal	1.06	SW	18.0	22.3	401 Btuh
20	1, NFRC 0.43	Metal	1.06	SW	30.0	22.3	668 Btuh
	Window Total				474.0(sqft)		10551 Btuh

Walls	Type	Ornt.	Ueff.	R-Value (Cav/Sh)	Area X	HTM=	Load
1	Conc Blk,Hollow	- Ext	(0.149)	4.1/0.0	478	3.13	1498 Btuh
4	Conc Blk,Hollow	- Ext	(0.149)	4.1/0.0	208	3.13	652 Btuh
9	Conc Blk,Hollow	- Ext	(0.149)	4.1/0.0	748	3.13	2344 Btuh
	Wall Total				1434(sqft)		4494 Btuh

Ceilings	Type/Color/Surface	Ueff.	R-Value	Area X	HTM=	Load
3	Vented Attic/L/Metal	(0.032)	30.0/0.0	2608	0.7	1744 Btuh
	Ceiling Total			2608(sqft)		1744Btuh

Floors	Type	Ueff.	R-Value	Size X	HTM=	Load
3	Slab On Grade	(1.180)	0.0	163.0 ft(perim.)	24.8	4039 Btuh
	Floor Total			2608 sqft		4039 Btuh

	Room Envelope Subtotal:	20829 Btuh

Infiltration	Type	Wholehouse ACH	Room Volume	Wall Ratio	CFM=	
	Natural(Adjusted for ventilation)	0.00	46944	0.31	0.0	0 Btuh

Duct load	Extremely sealed, Supply(R6.0-Attic), Return(R6.0-Attic) (DLM of 0.121)	2530 Btuh
Room #3	**Sensible Room Subtotal**	**23358 Btuh**

SYSTEM GROUPS (BLOCK LOADS)

Heating Loads For System(s):1 Serving Rooms: 1	Block load	13778 Btuh

Manual J Winter Calculations

Residential Load - Component Details (continued)

MR r SANCHEZ AND MRS NOLAN RODRIGUEZ Project Title:
13940 OLD CUTTLER RD A CUSTOM RESIDENCE SANCHEZ - RODRIGUEZ
PALMETTO BAY, FL Building Type: User

10/21/2015

Heating Loads For System(s):2 Serving Rooms: 2	Block load	30945 Btuh

Heating Loads For System(s):3 Serving Rooms: 3	Block load	23358 Btuh

WHOLE HOUSE TOTALS

Totals for Heating	Subtotal Sensible Heat Loss Ventilation Sensible Heat Loss Total Heat Loss	68082 Btuh 3464 Btuh 71546 Btuh

EQUIPMENT

1. Electric Strip Heat 2. Electric Strip Heat 3. Electric Strip Heat		17000 Btuh 34000 Btuh 34000 Btuh

Key: Window types - NFRC (Requires U-Factor and Shading coefficient(SHGC) of glass as numerical values)
or - Glass as 'Clear' or 'Tint' (Uses U-Factor and SHGC defaults)
U - (Window U-Factor)
HTM - (ManualJ Heat Transfer Multiplier)

Version 8

System Sizing Calculations - Summer

Residential Load - Room by Room Component Details

MR r SANCHEZ AND MRS NOLAN RODRIGUEZ Project Title:
13940 OLD CUTTLER RD A CUSTOM RESIDENCE SANCHEZ - RODRIGUEZ
PALMETTO BAY, FL

10/21/2015

Reference City: Miami, FL Temperature Difference: 17.0F(TMY3 99%) Humidity difference: 56gr.

Component Loads for Room #1: Master Bedroom

Window	Type* Panes	SHGC	U	InSh	IS	Ornt	Overhang Len	Hgt	Window Area(sqft) Gross	Shaded	Unshaded	HTM Shaded	Unshaded	Load
9	1 NFRC	0.43,	1.06	No	No	NE	3.0ft	8.0ft	53.0	0.0	53.0	27	48	2529 Btuh
13	1 NFRC	0.43,	1.06	No	No	NW	3.0ft	11.0f	64.0	0.0	64.0	27	48	3054 Btuh
14	1 NFRC	0.43,	1.06	No	No	NW	3.0ft	11.0f	72.0	0.0	72.0	27	48	3435 Btuh
15	1 NFRC	0.43,	1.06	No	No	SW	3.0ft	9.0ft	60.0	0.0	60.0	27	48	2873 Btuh
16	1 NFRC	0.43,	1.06	No	No	SW	3.0ft	6.0ft	9.0	0.0	9.0	27	48	431 Btuh
	Window Total								258 (sqft)					12321 Btuh

Walls	Type	U-Value	R-Value Cav/Sheath	Area(sqft)	HTM	Load
5	Concrete Blk,Hollow - Ext	0.15	4.1/0.0	427.0	2.5	1083 Btuh
7	Concrete Blk,Hollow - Ext	0.15	4.1/0.0	224.0	2.5	568 Btuh
8	Concrete Blk,Hollow - Ext	0.15	4.1/0.0	387.0	2.5	982 Btuh
	Wall Total			1038 (sqft)		2633 Btuh

Ceilings	Type/Color/Surface	U-Value	R-Value	Area(sqft)	HTM	Load
1	Vented Attic/Light/Metal	0.032	30.0/0.0	1190.0	1.46	1743 Btuh
	Ceiling Total			1190 (sqft)		1743 Btuh

Floors	Type	R-Value	Size	HTM	Load
1	Slab On Grade	0.0	1190 (ft-perimeter)	0.0	0 Btuh
	Floor Total		1190.0 (sqft)		0 Btuh

	Zone Envelope Subtotal:	16698 Btuh

Infiltration	Type	Wholehouse ACH	Volume(cuft)	Wall Ratio	CFM=	Load
	Natural(Adjusted for ventilation)	0.00	14280	0.23	0.0	0 Btuh

Internal gain	Occupants	Btuh/occupant		Appliance	Load
	2	X 230	+	0	460 Btuh

	Sensible Envelope Load:	17158 Btuh
Duct load	Extremely sealed, Supply(R6.0-Attic), Return(R6.0-Attic) (DGM of 0.084)	1441 Btuh
	Sensible Zone Load	**18599 Btuh**

Manual J Summer Calculations

Residential Load - Component Details (continued)

MR r SANCHEZ AND MRS NOLAN RODRIGUEZ Project Title: Climate:FL_MIAMI_INTL_AP
13940 OLD CUTTLER RD A CUSTOM RESIDENCE SANCHEZ - RODRIGUEZ
PALMETTO BAY, FL

10/21/2015

Component Loads for Room #2: Family Great

Window	Type* Panes	SHGC	U	InSh	IS	Ornt	Overhang Len	Hgt	Window Area(sqft) Gross	Shaded	Unshaded	HTM Shaded	Unshaded	Load
3	1 NFRC	0.43,	1.06	No	No	SE	3.0ft	14.0f	120.0	0.0	120.0	27	48	5746 Btuh
4	1 NFRC	0.43,	1.06	No	No	SE	14.0f	16.0f	16.0	16.0	0.0	27	48	438 Btuh
5	1 NFRC	0.43,	1.06	No	No	SE	3.0ft	16.0f	25.0	0.0	25.0	27	48	1197 Btuh
6	1 NFRC	0.43,	1.06	No	No	SE	3.0ft	15.0f	20.0	0.0	20.0	27	48	958 Btuh
7	1 NFRC	0.43,	1.06	No	No	SE	3.0ft	15.0f	60.0	0.0	60.0	27	48	2873 Btuh
10	1 NFRC	0.43,	1.06	No	No	NW	3.0ft	10.0f	112.0	0.0	112.0	27	48	5344 Btuh
11	1 NFRC	0.43,	1.06	No	No	NW	3.0ft	10.0f	192.0	0.0	192.0	27	48	9161 Btuh
12	1 NFRC	0.43,	1.06	No	No	NW	3.0ft	11.0f	40.0	0.0	40.0	27	48	1908 Btuh
	Window Total								585 (sqft)					27623 Btuh

Walls	Type	U-Value	R-Value Cav/Sheath	Area(sqft)	HTM	Load
2	Concrete Blk,Hollow - Ext	0.15	4.1/0.0	593.0	2.5	1504 Btuh
3	Concrete Blk,Hollow - Ext	0.15	4.1/0.0	1080.0	2.5	2740 Btuh
6	Concrete Blk,Hollow - Ext	0.15	4.1/0.0	424.0	2.5	1076 Btuh
	Wall Total			2097 (sqft)		5320 Btuh

Doors	Type	Area (sqft)	HTM	Load
1	Wood - Exterior	48.0	14.7	707 Btuh
	Door Total	48 (sqft)		707 Btuh

Ceilings	Type/Color/Surface	U-Value	R-Value	Area(sqft)	HTM	Load
2	Vented Attic/Light/Metal	0.032	30.0/0.0	2878.0	1.46	4216 Btuh
	Ceiling Total			2878 (sqft)		4216 Btuh

Floors	Type	R-Value	Size	HTM	Load
2	Slab On Grade	0.0	2878 (ft-perimeter)	0.0	0 Btuh
	Floor Total		2878.0 (sqft)		0 Btuh
			Zone Envelope Subtotal:		37866 Btuh

Infiltration	Type	Wholehouse ACH	Volume(cuft)	Wall Ratio	CFM=	Load
	Natural(Adjusted for ventilation)	0.00	51804	0.46	0.0	0 Btuh

Internal gain	Occupants		Btuh/occupant		Appliance	Load
	1	X	230	+	2200	2430 Btuh
				Sensible Envelope Load:		40296 Btuh
Duct load	Average sealed, Supply(R6.0-Attic), Return(R6.0-Attic)				(DGM of 0.115)	4643 Btuh
					Sensible Zone Load	**44939 Btuh**

Manual J Summer Calculations

Residential Load - Component Details (continued)

MR r SANCHEZ AND MRS NOLAN RODRIGUEZ Project Title: Climate:FL_MIAMI_INTL_AP
13940 OLD CUTTLER RD A CUSTOM RESIDENCE SANCHEZ - RODRIGUEZ
PALMETTO BAY, FL

10/21/2015

Component Loads for Room #3: Bedrooms Area

Window	Type* Panes	SHGC	U	InSh	IS	Ornt	Overhang Len	Hgt	Window Area(sqft) Gross	Shaded	Unshaded	HTM Shaded	Unshaded	Load
1	1 NFRC	0.43,	1.06	No	No	SE	3.0ft	6.0ft	60.0	0.0	60.0	27	48	2873 Btuh
2	1 NFRC	0.43,	1.06	No	No	SE	3.0ft	8.0ft	50.0	0.0	50.0	27	48	2394 Btuh
8	1 NFRC	0.43,	1.06	No	No	NE	3.0ft	11.0f	128.0	0.0	128.0	27	48	6107 Btuh
17	1 NFRC	0.43,	1.06	No	No	SW	3.0ft	11.0f	128.0	0.0	128.0	27	48	6129 Btuh
18	1 NFRC	0.43,	1.06	No	No	SW	3.0ft	9.0ft	60.0	0.0	60.0	27	48	2873 Btuh
19	1 NFRC	0.43,	1.06	No	No	SW	3.0ft	6.0ft	18.0	0.0	18.0	27	48	862 Btuh
20	1 NFRC	0.43,	1.06	No	No	SW	3.0ft	7.0ft	30.0	0.0	30.0	27	48	1436 Btuh
	Window Total								474 (sqft)					22674 Btuh

Walls	Type	U-Value	R-Value Cav/Sheath	Area(sqft)	HTM	Load
1	Concrete Blk,Hollow - Ext	0.15	4.1/0.0	478.0	2.5	1213 Btuh
4	Concrete Blk,Hollow - Ext	0.15	4.1/0.0	208.0	2.5	528 Btuh
9	Concrete Blk,Hollow - Ext	0.15	4.1/0.0	748.0	2.5	1898 Btuh
	Wall Total			1434 (sqft)		3638 Btuh

Ceilings	Type/Color/Surface	U-Value	R-Value	Area(sqft)	HTM	Load
3	Vented Attic/Light/Metal	0.032	30.0/0.0	2608.0	1.46	3821 Btuh
	Ceiling Total			2608 (sqft)		3821 Btuh

Floors	Type	R-Value	Size	HTM	Load
3	Slab On Grade	0.0	2608 (ft-perimeter)	0.0	0 Btuh
	Floor Total		2608.0 (sqft)		0 Btuh

	Zone Envelope Subtotal:	30132 Btuh

Infiltration	Type	Wholehouse ACH	Volume(cuft)	Wall Ratio	CFM=	Load
	Natural(Adjusted for ventilation)	0.00	46944	0.31	0.0	0 Btuh

Internal gain	Occupants	Btuh/occupant		Appliance	Load
	4	X 230	+	5400	6320 Btuh

	Sensible Envelope Load:	36452 Btuh
Duct load	Extremely sealed, Supply(R6.0-Attic), Return(R6.0-Attic) (DGM of 0.076)	2772 Btuh
	Sensible Zone Load	**39225 Btuh**

The following window Excursion will be assigned to the system loads.

Windows	July excursion for System 1	329 Btuh
	July excursion for System 2	0 Btuh
	July excursion for System 3	0 Btuh
	Excursion Subtotal:	329 Btuh

Manual J Summer Calculations

Residential Load - Component Details (continued)

MR r SANCHEZ AND MRS NOLAN RODRIGUEZ Project Title: Climate:FL_MIAMI_INTL_AP
13940 OLD CUTTLER RD A CUSTOM RESIDENCE SANCHEZ - RODRIGUEZ
PALMETTO BAY, FL

10/21/2015

Duct load		28 Btuh
	Sensible Excursion Load	**356 Btuh**

Manual J Summer Calculations

Residential Load - Component Details (continued)

MR r SANCHEZ AND MRS NOLAN RODRIGUEZ Project Title: Climate:FL_MIAMI_INTL_AP
13940 OLD CUTTLER RD A CUSTOM RESIDENCE SANCHEZ - RODRIGUEZ
PALMETTO BAY, FL

10/21/2015

SYSTEM GROUPS (BLOCK LOADS)

	Sensible Envelope Load	**17158 Btuh**
	Window Excursion	329 Btuh
Cooling Loads	Sensible Duct Load (duct gain multiplier of 0.084) (Includes 28 Btuh due to window excursion)	1469 Btuh
	Sensible ventilation	935 Btuh
For System(s):	**Zone Sensible gain**	**19890 Btuh**
1	Latent infiltration/ventilation gain	1904 Btuh
Serving Zones:	Latent duct gain	239 Btuh
1	Latent occupant gain	400 Btuh
	Latent other gain	0 Btuh
	Total block load	**22482 Btuh**

	Sensible Envelope Load	**40296 Btuh**
	Window Excursion	0 Btuh
Cooling Loads	Sensible Duct Load (duct gain multiplier of 0.115)	4643 Btuh
	Sensible ventilation	935 Btuh
For System(s):	**Zone Sensible gain**	**45874 Btuh**
2	Latent infiltration/ventilation gain	1904 Btuh
Serving Zones:	Latent duct gain	1584 Btuh
2	Latent occupant gain	200 Btuh
	Latent other gain	2200 Btuh
	Total block load	**51761 Btuh**

Manual J Summer Calculations

Residential Load - Component Details (continued)

MR r SANCHEZ AND MRS NOLAN RODRIGUEZ Project Title: Climate:FL_MIAMI_INTL_AP
13940 OLD CUTTLER RD A CUSTOM RESIDENCE SANCHEZ - RODRIGUEZ
PALMETTO BAY, FL

10/21/2015

SYSTEM GROUPS (BLOCK LOADS)

	Sensible Envelope Load	**36452 Btuh**
	Window Excursion	0 Btuh
Cooling Loads	Sensible Duct Load (duct gain multiplier of 0.076)	2772 Btuh
	Sensible ventilation	935 Btuh
For System(s):	**Zone Sensible gain**	**40100 Btuh**
3	Latent infiltration/ventilation gain	1904 Btuh
Serving Zones:	Latent duct gain	588 Btuh
3	Latent occupant gain	300 Btuh
	Latent other gain	5400 Btuh
	Total block load	**48852 Btuh**

WHOLE HOUSE TOTALS

	Sensible Envelope Load All Zones	**94235 Btuh**
	Sensible Duct Load	8884 Btuh
	Total Sensible Zone Loads	**103119 Btuh**
	Sensible ventilation	2804 Btuh
	Blower	0 Btuh
Whole House	**Total sensible gain**	**105923 Btuh**
Totals for Cooling	Latent infiltration gain (for 56 gr. humidity difference)	0 Btuh
	Latent ventilation gain	5711 Btuh
	Latent duct gain	2461 Btuh
	Latent occupant gain (7.0 people @ 200 Btuh per person)	1400 Btuh
	Latent other gain	7600 Btuh
	Latent total gain	**17171 Btuh**
	TOTAL GAIN	**123095 Btuh**

EQUIPMENT

1. Central Unit	#	24000 Btuh
2. Central Unit	#	51400 Btuh
3. Central Unit	#	51400 Btuh

STRUCTURAL CALCULATIONS

RESIDENCE LOCATED AT 13940 OLD CUTTLER ROAD PALMETO BAY, FLORIDA.

PREPARED BY:

JOSE L. GUZMAN P.E.
4869 SW 75TH Ave, Miami, FL 33155
Tel.786.338.1082.

October 23, 2015

10/23/15

Jose L. Guzman, P.E.
FL P.E. # 56138

HURRICANE STRAP SCHEDULE

CONNECTION TYPE	SIMPSON/NUVUE	UPLIFT/DOWN	NAIL SIZE QUANTITY SEAT PLATE	NAIL SIZE QUANTITY	NO. APPROVALS
A	NU-VUE: HVTA-18	1[illegible] *	(6) 16d X 1 1/2	(2) 16d	[illegible]
B	NU-VUE: HVTH-18H	[illegible]	(6) 16d X 1 1/2	(18) 16d X 1 1/2	[illegible]
C	SIMPSON PGTR	[illegible] *	2 (1/2" X 8 TITEN HD)	18 SDS 1/4" X 3"	FL-[illegible]
D	SIMPSON PGTR	[illegible] *	4 (1/2" X 8 TITEN HD)	18 SDS 1/4" X 3"	FL-[illegible]
E	SEE DET. A	[illegible]			

POINT LOAD = [illegible] LBS
AT BOTT. CHORD PANEL POINT
TRUSSES TOP AND BOTT. CORD 6"

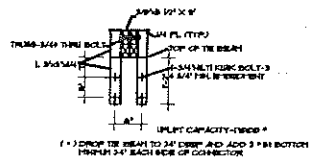

(*) DROP TIE BEAM TO 24" DEEP AND ADD 3 * IN BOTTOM MINIMUM 24" EACH SIDE OF CONNECTOR

DETAIL A
SCALE: 3/4" = 1'-0"

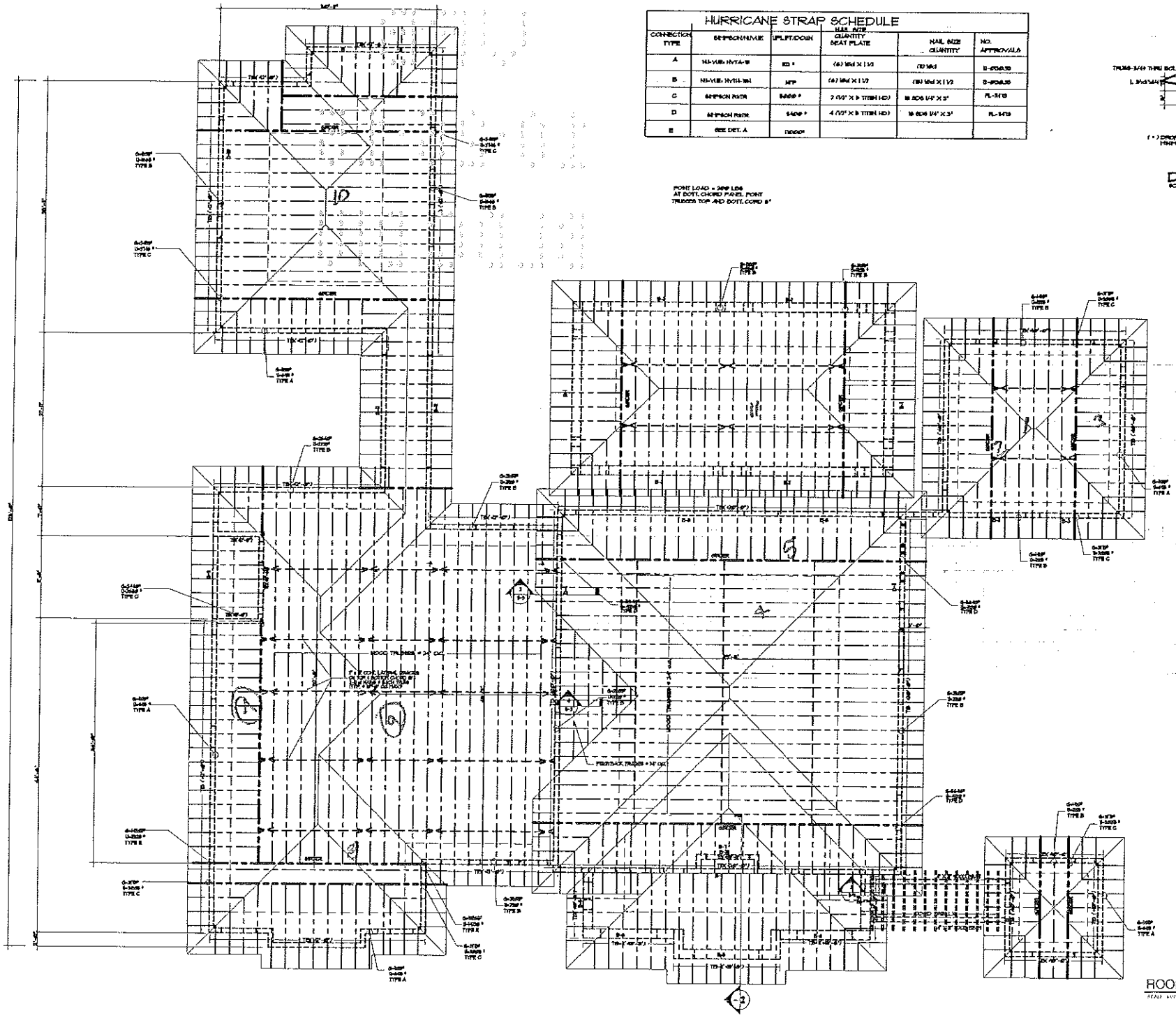

ROOF FRAMIG PLAN
SCALE: 1/4" = 1'-0"

JOSE L GUZMAN P.E.

JOSE L. GUZMAN P.E.
4869 SW 75TH AVENUE
MIAMI, FLORIDA
PHONE 786 338 1082

JOB
SHEET NO. OF
CALCULATED BY J Guzman DATE 10/15
CHECKED BY DATE
SCALE

GRAVITY & UPLIFT LOAD AT TRUSSES

① GARAGE truss

(4.5-10)2 = 70 (8.5-10)2 = 150

3'-0" 25'-4" 3'-0"

$V = 3 \times 150 + \frac{25.33}{2} \times 70 = 1335^{\#}$

$G = \left(\frac{25.33}{2} + 3\right) 90 = 1410^{\#}$

② GIRDER — $V = 2.25 \times 1335 = 3005^{\#}$
$G = 2.25 \times 1410 = 3175^{\#}$

③ 70 150

7'-0" 3'-0"

$V = 3.5 \times 70 + 3 \times 150 = 695^{\#}$
$G = 6.5 \times 90 = 585^{\#}$

④

3'-0" 49'-8" 3'-0

$V = 3 \times 150 + \frac{49.67}{2} \times 70 = 2190^{\#}$

$G = \left(\frac{49.67}{2} + 3\right) 90 = 2505^{\#}$

⑤ GIRDER

$V = 2.25 \times 2190 = 4930^{\#}$
$G = 2.25 \times 2505 = 5640^{\#}$

JOSE L. GUZMAN P.E.
4869 SW 75TH AVENUE
MIAMI, FLORIDA
PHONE 786 338 1082

JOB
SHEET NO. OF
CALCULATED BY DATE
CHECKED BY DATE
SCALE

(6)

3-0 48-3 3-0 SIMILAR TO (4)

(7) GIRDER.

U = 4.5 × 35 = 157.5
G = 4.5 × 45 = 202.5

34'-0"

$U = 157.5 \times \frac{34}{2} = 2678$ $G = 202.5 \times \frac{34}{2} = 3442$

(8) GIRDER.

2678
3442

$\frac{52.67}{2} \times 35 = 921.7$ $\frac{52.67}{2} \times 45 = 1185$

150 70/90

3-0 (A) 7-0 24 (B) 3-0

31-0

$V_{(A)} = 150 \times 3 + 70 \times 7 \times \frac{27.5}{31} + 2678 \times \frac{24}{31} + 921.7 \times 24 \times \frac{12}{31} = 11520^{\#}$

$G_{(A)} = 90 \times 3 + 90 \times 7 \times \frac{27.5}{31} + 3442 \times \frac{24}{31} + 1185 \times \frac{24 \times 12}{31} = 14502^{\#}$

$V_{(B)} = 14220^{\#}$ $G_{(B)} = 18265^{\#}$

(9)

70/90 150/90

52'-9"

$U = \frac{52.67}{2} \times 70 + 150 \times 3 = 2295^{\#}$

$G = \quad \times 90 + 3 \times 90 = 2640^{\#}$

PRODUCT 204-1 (Single Sheets) 205-1 (Padded)

JOSE L. GUZMAN P.E.
4869 SW 75TH AVENUE
MIAMI, FLORIDA
PHONE 786 338 1082

JOB
SHEET NO. OF
CALCULATED BY DATE
CHECKED BY DATE
SCALE

TRUSS (10)

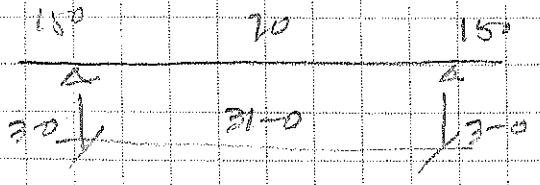

$U = 3 \times 150 + \frac{31}{2} \times 70 = 1535^{\#}$

$G = \left(\frac{31}{2} + 3\right) 90 = 1665^{\#}$

TRUSS (11)

$(38-10)2 = 56$

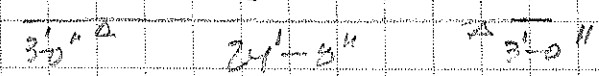

$U = \left(\frac{24.67}{2} + 3\right) 56 = 860^{\#}$

$G = (\quad) 90 = 1380^{\#}$

Cumulative $U = 2.25 \times 860 = 1935^{\#}$

$G = 1380 \times 2.25 = 3105^{\#}$

PRODUCT 204-1 (Single Sheets) 205-1 (Padded)

JOSE L. GUZMAN P.E.
4869 SW 75TH AVENUE
MIAMI, FLORIDA
PHONE 786 338 1082

JOB
SHEET NO. OF
CALCULATED BY DATE
CHECKED BY DATE
SCALE

CONCRETE BEAM.

B-2

20'-4"

DL

$\left(\frac{24.67}{2} + 3\right) 25 = 384$ PLF

LL

$\times 20 = 307$ PLF

B-3 8x36"

B-4

17'-0"

DL

$\left(\frac{49.67}{2} + 3\right) 25 = 696$ PLF

$(20-12)\,65 = 520$ PLF

1216

LL

$\times 20 = 557$ PLF ROOF

WALL

557

B-8

25'-0" 16

DL

$6.5 \times 25 = 162.5$

$(20'-8')\,65 = 780$

943

LL

$6.5 \times 20 = 130$ ROOF

WALL

JOSE L. GUZMAN P.E.
4869 SW 75TH AVENUE
MIAMI, FLORIDA
PHONE 786 338 1082

JOB _____

SHEET NO. _____ OF _____

CALCULATED BY _____ DATE _____

CHECKED BY _____ DATE _____

SCALE _____

BEAM B-12

22-0

DL

$\frac{8}{2} \times 25 = 100$

LL

$\frac{8}{2} \times 20 = 80$

Title :
Dsgnr:
Description :

Job #
Date: 2:20PM, 21 OCT 15

Scope :

Concrete Rectangular & Tee Beam Design

Description B-4

General Information

Code Ref: ACI 318-02, 1997 UBC, 2003 IBC, 2003 NFPA 5000

Span	17.00 ft	f'c	3,000 psi
Depth	24.000 in	Fy	60,000 psi
Width	8.000 in	Concrete Wt.	145.0 pcf
		Seismic Zone	0
		End Fixity	Pinned-Pinned
Beam Weight Added Internally		Live Load acts with Short Term	

Reinforcing

Rebar @ Center of Beam...				Rebar @ Left End of Beam...				Rebar @ Right End of Beam...			
	Count	Size	'd' from Top		Count	Size	'd' from Top		Count	Size	'd' from Top
#1	2	8	21.00in	#1			in	#1			in

Load Factoring

Note: Load factoring supports 2003 IBC and 2003 NFPA 5000 by virtue of their references to ACI 318-02 for concrete design.
Factoring of entered loads to ultimate loads within this program is according to ACI 318-02 C.2

Uniform Loads

	Dead Load	Live Load	Short Term	Start	End
#1	1.220 k	0.560 k	k	0.000 ft	17.000 ft

Summary

Beam Design OK

Span = 17.00ft, Width= 8.00in Depth = 24.00in

Maximum Moment : Mu	105.87 k-ft	Maximum Deflection	-0.2924 in
Allowable Moment : Mn*phi	132.77 k-ft		
Maximum Shear : Vu	19.93 k	Max Reaction @ Left	16.77 k
Allowable Shear : Vn*phi	38.08 k	Max Reaction @ Right	16.77 k

Shear Stirrups...

Stirrup Area @ Section 0.220 in2

Region	0.000	2.833	5.667	8.500	11.333	14.167	17.000 ft
Max. Spacing	10.500	10.500	10.500	10.500	10.500	10.500	10.500 in
Max Vu	19.929	16.740	8.370	8.171	8.171	16.541	19.729 k

Bending & Shear Force Summary

Bending...	Mn*Phi	Mu, Eq. C-1	Mu, Eq. C-2	Mu, Eq. C-3
@ Center	132.77 k-ft	105.87 k-ft	79.40 k-ft	45.95 k-ft
@ Left End	0.00 k-ft	0.00 k-ft	0.00 k-ft	0.00 k-ft
@ Right End	0.00 k-ft	0.00 k-ft	0.00 k-ft	0.00 k-ft
Shear...	**Vn*Phi**	**Vu, Eq. C-[illegible]**	**Vu, Eq. C-[illegible]**	**Vu, Eq. C-[illegible]**
@ Left End	38.08 k	19.93 k	14.95 k	8.65 k
@ Right End	38.08 k	19.73 k	14.80 k	8.56 k

Deflection

Deflections...	Upward			Downward		
DL + [Bm Wt]	0.0000 in	at	0.0000 ft	-0.1878 in	at	8.5000 ft
DL + LL + [Bm Wt]	0.0000 in	at	0.0000 ft	-0.2924 in	at	8.5000 ft
DL + LL + ST + [Bm Wt]	0.0000 in	at	0.0000 ft	-0.2924 in	at	8.5000 ft

Reactions...	@ Left	@ Right
DL + [Bm Wt]]	12.013 k	12.013 k
DL + LL + [Bm Wt]	16.773 k	16.773 k
DL + LL + ST + [Bm Wt]	16.773 k	16.773 k

Description B-4

Section Analysis

Evaluate Moment Capacity...	Center	Left End	Right End
X : Neutral Axis	5.465 in	0.000 in	0.000 in
a = beta * Xneutral	4.645 in	0.000 in	0.000 in
Compression in Concrete	94.763 k	0.000 k	0.000 k
Sum [Steel comp. forces]	0.000 k	0.000 k	0.000 k
Tension in Reinforcing	-94.800 k	0.000 k	0.000 k
Find Max As for Ductile Failure...			
X-Balanced	12.429 in	0.000 in	0.0000 in
Xmax = Xbal * 0.75	9.321 in	0.000 in	0.000 in
a-max = beta * Xbal	10.564 in	0.000 in	0.000 in
Compression in Concrete	161.634 k	0.000 k	0.000 k
Sum [Steel Comp Forces]	0.000 k	0.000 k	0.000 k
Total Compressive Force	161.634 k	0.000 k	0.000 k
AS Max = Tot Force / Fy	2.694 in2	0.000 in2	0.000 in2
Actual Tension As	1.580 OK	0.000 OK	0.000 OK

Additional Deflection Calcs

Neutral Axis	7.135 in	Mcr	26.29 k-ft
Igross	9,216.00 in4	Ms:Max DL + LL	71.29 k-ft
Icracked	3,789.98 in4	R1 = (Ms:DL+LL)/Mcr	0.369
Elastic Modulus	3,122.0 ksi	Ms:Max DL+LL+ST	71.29 k-ft
Fr = 7.5 * f'c^.5	410.792 psi	R2 = (Ms:DL+LL+ST)/Mcr	0.369
Z:Cracking	0.000 k/in	I:eff... Ms(DL+LL)	4,062.163 in4
Z:cracking > 175 : No Good!		I:eff... Ms(DL+LL+ST)	4,062.163 in4
Eff. Flange Width	8.00 in		

ACI Factors (per ACI 318-02, applied internally to entered loads)

ACI C-1 & C-2 DL	1.400	ACI C-2 Group Factor	0.750	Add"l "1.4" Factor for Seismic	1.400
ACI C-1 & C-2 LL	1.700	ACI C-3 Dead Load Factor	0.900	Add"l "0.9" Factor for Seismic	0.900
ACI C-1 & C-2 ST	1.700	ACI C-3 Short Term Factor	1.300		
....seismic = ST * :	1.100				

Title :
Dsgnr:
Description :

Job #
Date: 3:35PM, 21 OCT 15

Scope :

Rev: 580000
User: KW-0605358, Ver 5.8.0, 1-Dec-2003
(c)1983-2003 ENERCALC Engineering Software

Concrete Rectangular & Tee Beam Design

Description B-~~11~~ B-12

General Information

Code Ref: ACI 318-02, 1997 UBC, 2003 IBC, 2003 NFPA 5000

Span	22.00 ft	f'c	3,000 psi
Depth	48.000 in	Fy	60,000 psi
Width	8.000 in	Concrete Wt.	145.0 pcf
		Seismic Zone	0
		End Fixity	Pinned-Pinned
Beam Weight Added Internally		Live Load acts with Short Term	

Reinforcing

Rebar @ Center of Beam...	Count	Size	'd' from Top	Rebar @ Left End of Beam...	Count	Size	'd' from Top	Rebar @ Right End of Beam...	Count	Size	'd' from Top
#1	2	6	45.00 in	#1			in	#1			in

Load Factoring

Note: Load factoring supports 2003 IBC and 2003 NFPA 5000 by virtue of their references to ACI 318-02 for concrete design. Factoring of entered loads to ultimate loads within this program is according to ACI 318-02 C.2

Uniform Loads

	Dead Load	Live Load	Short Term	Start	End
#1	0.100 k	0.100 k	k	0.000 ft	22.000 ft

Summary

Beam Design OK

Span = 22.00ft, Width= 8.00in Depth = 48.00in

Maximum Moment : Mu	51.51 k-ft		
Allowable Moment : Mn*phi	172.94 k-ft	Maximum Deflection	-0.0134 in
Maximum Shear : Vu	6.22 k	Max Reaction @ Left	6.45 k
Allowable Shear : Vn*phi	94.72 k	Max Reaction @ Right	6.45 k

Shear Stirrups...

Stirrup Area @ Section 0.440 in2

Region	0.000	3.667	7.333	11.000	14.667	18.333	22.000 ft
Max. Spacing	Not Req'd	Not Req'd	Not Req'd	Not Req'd	Not Req'd	Not Req'd	Not Req'd in
Max Vu	6.218	6.218	3.147	3.072	3.072	6.143	6.143 k

Bending & Shear Force Summary

Bending...	Mn*Phi	Mu, Eq. C-1	Mu, Eq. C-2	Mu, Eq. C-3
@ Center	172.94 k-ft	51.51 k-ft	38.63 k-ft	26.50 k-ft
@ Left End	0.00 k-ft	0.00 k-ft	0.00 k-ft	0.00 k-ft
@ Right End	0.00 k-ft	0.00 k-ft	0.00 k-ft	0.00 k-ft
Shear...	**Vn*Phi**	**Vu, Eq. C-1**	**Vu, Eq. C-2**	**Vu, Eq. C-3**
@ Left End	94.72 k	6.22 k	4.66 k	3.20 k
@ Right End	94.72 k	6.14 k	4.61 k	3.16 k

Deflection

Deflections...	Upward			Downward		
DL + [Bm Wt]	0.0000 in	at	0.0000 ft	-0.0111 in	at	11.0000 ft
DL + LL + [Bm Wt]	0.0000 in	at	0.0000 ft	-0.0134 in	at	11.0000 ft
DL + LL + ST + [Bm Wt]	0.0000 in	at	0.0000 ft	-0.0134 in	at	11.0000 ft

Reactions...	@ Left	@ Right
DL + [Bm Wt]]	5.353 k	5.353 k
DL + LL + [Bm Wt]	6.453 k	6.453 k
DL + LL + ST + [Bm Wt]	6.453 k	6.453 k

Title :
Dsgnr:
Description :

Job #
Date: 3:35PM, 21 OCT 15

Scope :

Concrete Rectangular & Tee Beam Design

Description ~~B-11~~ B-12

Section Analysis

Evaluate Moment Capacity...	Center	Left End	Right End
X : Neutral Axis	3.040 in	0.000 in	0.000 in
a = beta * Xneutral	2.584 in	0.000 in	0.000 in
Compression in Concrete	52.714 k	0.000 k	0.000 k
Sum [Steel comp. forces]	0.000 k	0.000 k	0.000 k
Tension in Reinforcing	-52.800 k	0.000 k	0.000 k
Find Max As for Ductile Failure...			
X-Balanced	26.633 in	0.000 in	0.0000 in
Xmax = Xbal * 0.75	19.974 in	0.000 in	0.000 in
a-max = beta * Xbal	22.638 in	0.000 in	0.000 in
Compression in Concrete	346.358 k	0.000 k	0.000 k
Sum [Steel Comp Forces]	0.000 k	0.000 k	0.000 k
Total Compressive Force	346.358 k	0.000 k	0.000 k
AS Max = Tot Force / Fy	5.773 in2	0.000 in2	0.000 in2
Actual Tension As	0.880 OK	0.000 OK	0.000 OK

Additional Deflection Calcs

Neutral Axis	8.625 in	Mcr	105.16 k-ft
Igross	73,728.00 in4	Ms:Max DL + LL	35.49 k-ft
Icracked	12,526.60 in4	R1 = (Ms:DL+LL)/Mcr	2.963
Elastic Modulus	3,122.0 ksi	Ms:Max DL+LL+ST	35.49 k-ft
Fr = 7.5 * f'c^.5	410.792 psi	R2 = (Ms:DL+LL+ST)/Mcr	2.963
Z:Cracking	0.000 k/in	I:eff... Ms(DL+LL)	73,728.000 in4
Z:cracking > 175 : No Good!		I:eff... Ms(DL+LL+ST)	73,728.000 in4
Eff. Flange Width	8.00 in		

ACI Factors (per ACI 318-02, applied internally to entered loads)

ACI C-1 & C-2 DL	1.400	ACI C-2 Group Factor	0.750	Add"l "1.4" Factor for Seismic	1.400
ACI C-1 & C-2 LL	1.700	ACI C-3 Dead Load Factor	0.900	Add"l "0.9" Factor for Seismic	0.900
ACI C-1 & C-2 ST	1.700	ACI C-3 Short Term Factor	1.300		
....seismic = ST * :	1.100				

JOSE L. GUZMAN P.E.
4869 SW 75TH AVENUE
MIAMI, FLORIDA
PHONE 786 338 1082

JOB
SHEET NO. OF
CALCULATED BY DATE
CHECKED BY DATE
SCALE

CMU WALL

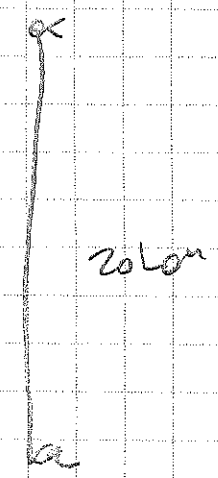

wind load = 41.76 psf.

$\frac{41.76}{0.6} = 69.6$ psf

WALL 12 Lon

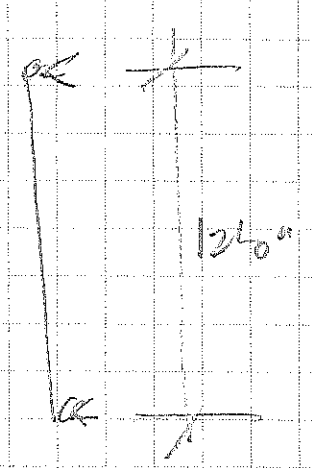

$\frac{51}{0.6} = 85$ psf

Prjct:
Topic:
Page:

Name:
Date:
Chkd:

Design of a Reinforced Masonry Wall with Out-of-Plane Loads
Using the 2011 MSJC Strength Design Code

Material and Construction Data

8 in. CMU, Partial grout, running bond
Wall Weight = 48.89 psf
Type N Masonry cement / Air-entrained PCL Mortar, Coarse Grout
CMU Density = 115.0 pcf
f'_m = 1,500 psi (Specified)
$E_m = 900f'_m$ = 1,350,000 psi

Wall Design Details

Thickness = 7.625 in.
Height = 240.0 in. (Simply Supported Wall, Effective height = H)
x = 3.813 in.
#7 Bars, Fy = 60,000
Reinforcement Spacing = 24.00 in. On-Center
Effective Width = 24.00 in.

Wall Design Section Properties

A_o = 51.30 in^2 per foot width
S_o = 93.20 in^3 per foot width
I_o = 355.3 in^4 per foot width
r_o = 2.632 in

Wall Average Section Properties

A_{avg} = 57.71 in^2 per foot width
I_{avg} = 369.4 in^4 per foot width
r_{avg} = 2.530 in

Wall Support: Simply Supported Wall

Specified Load Components

Load	P (lb)	e (in)	W1(psf)	W2 (psf)	L (lb/ft)	h1 (in)	h2 (in)
Dead	0	0	0	0	0	0	240
Live	0	0	0	0	0	0	240
Soil	0	0	0	0	0	0	240
Fluid	0	0	0	0	0	0	240
Wind	0	0	70	70	0	0	240
Seismic	0	0	0	0	0	0	240
Roof	0	0	0	0	0	0	240
Rain	0	0	0	0	0	0	240
Snow	0	0	0	0	0	0	240

f_1 = 1.000
f_2 = 1.000
f_3 = 0.
f_4 = 0.

Controlling Load Cases

Section Forces at the Location of Controlling Flexure and Axial Load
Critical Load Combination: 36) 1.2D + 1.0W + f_1L + 0.5L_r
x/H = 0.500 from bottom of wall
Moment utilization ratio = 0.827
V_u = 0. lb/ft
M_{Lu} = 42,000 lb-in./ft
P_u = 586.7 lb/ft at e_n = 0. in
$Delta_u$ = 3.322 in
$M_{Tu} = M_{Lu} + P_u e_n + P_u(Delta_u)$ = 43,950 lb-in/ft
P = 0. lb/ft at e_n = 0. in
V = 0. lb/ft
M_L = 0. lb-in/ft
Ultimate Moment Capacity = 53,100 lb-in/ft (4,425 lb-ft/ft) at this axial load
Ultimate Shear Capacity = 3,694 lb/ft at this location

The wall is adequate for these critical section forces.

Section Forces at the Location of Controlling Shearing Force
Critical Load Combination: 57) 0.9D + 1.6H + 1.0W
x/H = 0.970 from bottom of wall
V_u = -658.0 lb/ft
M_{Lu} = 4,889 lb-in./ft
P_u = 26.40 lb/ft at e_n = 0. in
$Delta_u$ = 0.308 in
$M_{Tu} = M_{Lu} + P_u e_n + P_u(Delta_u)$ = 4,897 lb-in/ft
P = 0. lb/ft at e_n = 0. in
V = 0. lb/ft
M_L = 0. lb-in/ft
Ultimate Moment Capacity = 51,710 lb-in/ft at this axial load
Ultimate Shear Capacity = 3,648 lb/ft at this location

The wall is adequate for these critical section forces.

These were found to be load cases that controlled the design.
The flexural, shear and axial forces shown are those occurring

Prjct:
Topic:
Page:

Name:
Date:
Chkd:

at the critical section for the case controlled by flexure and
at the critical section for the case controlled by shear.

Design Calculations: Section with Controlling Bending Moment and Axial Load

Section Design Forces Used
V_u = 0. lb/ft (Computed from Loads)
M_{Lu} = 42,000 lb-in./ft (Computed from Loads)
P_u = 586.7 lb/ft at e = 0. in (Computed from Loads)

Wall Axial Design Data
P_u max = 23,970 lbs/ft (Code Equation 3-17 or 3-18)

Maximum Permitted Axial Load for Combination D+0.75L+0.525Q_e = 497.2 lbs/ft (MSJC 3.3.3.5.1)
P at the bottom of the wall for this combination 977.80 lbs/ft
THE MAXIMUM VALUE HAS BEEN EXCEEDED

Wall Flexural Design Data
A_s Required = 0.471 sq.in. in each grouted cell
A_s Provided = 0.600 sq.in.
Rho_{min} = 0.

Wall Flexural Capacity with Specified Steel
a = 1.381 in.
d = 3.813 in.
M_n = 59,000 lb-in/ft
M_u available = 0.900(59,000) = 53,100 lb-in/ft (4,425 lb-ft/ft)

f_r = 63.67 psi
I_{gr} = 355.3 in^4/ft

Shear Design Data
V_n max = 7,947 lbs/ft (Section 3.3.4.1.2)
V_{nm} = 4,617 lbs/ft (Section 3.3.4.1.2.1)
Maximum available V_u is the lesser of:
V_u max = 0.800(7,947) = 6,358 lbs/ft
V_u max = 0.800(4,617 + 0.) = 3,694 lbs/ft CONTROLS (Note: V_{ns} = 0 for walls with out-of-plane loading.)

Service Load Deflection Limitations (MSJC 3.3.5.4)
Maximum permitted service load deflection = 0.007(H) = 0.007(240.0) = 1.679 in
Maximum service load deflection = 1.7507 in
Load combination with maximum deflection: 0.6D + H + 0.6W

Prjct:	Name:
Topic:	Date:
Page:	Chkd:

Development and Splice Lengths for Longitudinal Reinforcement

K = 3.3750 in.

Required Development Length: l_d = 59.39 in.

Required Lap Splice Length: = 59.39 in.

With transverse reinforcement (A_{sc}), the lap splice can be reduced as follows (MSJC 2.1.7.7.1.2):

Minimum Lap Splice Length = 31.50 in. with A_{sc} = 0.1462 in^2 (#4 or larger bars)

Lap Splice Length = 38.41 in. with #3 Transverse Bars (A_{sc} = 0.110 in^2)

Some codes may require epoxy-coated reinforcement to have longer development and splice lengths.

Prjct:	Name:
Topic:	Date:
Page:	Chkd:

Design of a Reinforced Masonry Wall with Out-of-Plane Loads
Using the 2011 MSJC Strength Design Code

Material and Construction Data

8 in. CMU, Partial grout, running bond
Wall Weight = 44.96 psf
Type N Masonry cement / Air-entrained PCL Mortar, Coarse Grout
CMU Density = 115.0 pcf
f'_m = 1,500 psi (Specified)
$E_m = 900f'_m$ = 1,350,000 psi

Wall Design Details

Thickness = 7.625 in.
Height = 144.0 in. (Simply Supported Wall, Effective height = H)
x = 3.813 in.
#5 Bars, Fy = 60,000
Reinforcement Spacing = 32.00 in. On-Center
Effective Width = 32.00 in.

Wall Design Section Properties

A_o = 45.98 in^2 per foot width
S_o = 90.15 in^3 per foot width
I_o = 343.7 in^4 per foot width
r_o = 2.733 in

Wall Average Section Properties

A_{avg} = 53.66 in^2 per foot width
I_{avg} = 360.5 in^4 per foot width
r_{avg} = 2.592 in

Wall Support: Simply Supported Wall

Specified Load Components

Load	P (lb)	e (in)	W1(psf)	W2 (psf)	L (lb/ft)	h1 (in)	h2 (in)
Dead	0	0	0	0	0	0	144
Live	0	0	0	0	0	0	144
Soil	0	0	0	0	0	0	144
Fluid	0	0	0	0	0	0	144
Wind	0	0	85	85	0	0	144
Seismic	0	0	0	0	0	0	144
Roof	0	0	0	0	0	0	144
Rain	0	0	0	0	0	0	144
Snow	0	0	0	0	0	0	144

Prjct:
Topic:
Page:

Name:
Date:
Chkd:

f_1 = 1.000
f_2 = 1.000
f_3 = 0.
f_4 = 0.

Controlling Load Cases

Section Forces at the Location of Controlling Flexure and Axial Load
Critical Load Combination: 57) 0.9D + 1.6H + 1.0W
x/H = 0.509 from bottom of wall
Moment utilization ratio = 0.798
V_u = -10.20 lb/ft
M_{Lu} = 18,350 lb-in./ft
P_u = 237.9 lb/ft at e_n = 0. in
$Delta_u$ = 0.750 in
$M_{Tu} = M_{Lu} + P_u e_n + P_u(Delta_u)$ = 18,530 lb-in/ft
P = 0. lb/ft at e_n = 0. in
V = 0. lb/ft
M_L = 0. lb-in/ft
Ultimate Moment Capacity = 23,200 lb-in/ft (1,934 lb-ft/ft) at this axial load
Ultimate Shear Capacity = 3,253 lb/ft at this location

The wall is adequate for these critical section forces.

Section Forces at the Location of Controlling Shearing Force
Critical Load Combination: 57) 0.9D + 1.6H + 1.0W
x/H = 0.950 from bottom of wall
V_u = -459.0 lb/ft
M_{Lu} = 3,488 lb-in./ft
P_u = 24.28 lb/ft at e_n = 0. in
$Delta_u$ = 0.112 in
$M_{Tu} = M_{Lu} + P_u e_n + P_u(Delta_u)$ = 3,491 lb-in/ft
P = 0. lb/ft at e_n = 0. in
V = 0. lb/ft
M_L = 0. lb-in/ft
Ultimate Moment Capacity = 22,490 lb-in/ft at this axial load
Ultimate Shear Capacity = 3,216 lb/ft at this location

The wall is adequate for these critical section forces.

These were found to be load cases that controlled the design.
The flexural, shear and axial forces shown are those occurring

at the critical section for the case controlled by flexure and
at the critical section for the case controlled by shear.

Design Calculations: Section with Controlling Bending Moment and Axial Load

Section Design Forces Used
V_u = -10.20 lb/ft (Computed from Loads)
M_{Lu} = 18,350 lb-in./ft (Computed from Loads)
P_u = 237.9 lb/ft at e = 0. in (Computed from Loads)

Wall Axial Design Data
$P_{u\ max}$ = 33,470 lbs/ft (Code Equation 3-17 or 3-18)

Maximum Permitted Axial Load for Combination D+0.75L+0.525Q_e = 10,300 lbs/ft (MSJC 3.3.3.5.1)
P at the bottom of the wall for this combination 539.51 lbs/ft

Wall Flexural Design Data
A_s Required = 0.241 sq.in. in each grouted cell
A_s Provided = 0.310 sq.in.
Rho_{min} = 0.

Wall Flexural Capacity with Specified Steel
a = 0.502 in.
d = 3.813 in.
M_n = 25,780 lb-in/ft
M_u available = 0.900(25,780) = 23,200 lb-in/ft (1,934 lb-ft/ft)

f_r = 53.50 psi
I_{gr} = 343.7 in^4/ft

Shear Design Data
$V_{n\ max}$ = 7,123 lbs/ft (Section 3.3.4.1.2)
V_{nm} = 4,066 lbs/ft (Section 3.3.4.1.2.1)
Maximum available V_u is the lesser of:
$V_{u\ max}$ = 0.800(7,123) = 5,698 lbs/ft
$V_{u\ max}$ = 0.800(4,066 + 0.) = 3,253 lbs/ft CONTROLS (Note: V_{ns} = 0 for walls with out-of-plane loading.)

Service Load Deflection Limitations (MSJC 3.3.5.4)
Maximum permitted service load deflection = 0.007(H) = 0.007(144.0) = 1.008 in
Maximum service load deflection = 0.3274 in
Load combination with maximum deflection: 0.6D + H + 0.6W

Development and Splice Lengths for Longitudinal Reinforcement

Prjct:	Name:
Topic:	Date:
Page:	Chkd:

K = 3.5000 in.

Required Development Length: l_d = 22.48 in.

Required Lap Splice Length: = 22.48 in. (Cannot be reduced MSJC 2.1.7.7.1.2)

Some codes may require epoxy-coated reinforcement to have longer development and splice lengths.

JOSE L. GUZMAN P.E.
4869 SW 75TH AVENUE
MIAMI, FLORIDA
PHONE 786 338 1082

JOB
SHEET NO. OF
CALCULATED BY DATE
CHECKED BY DATE
SCALE

Footing

UPPER GARDEN (B)

LOAD = 14220#

F6 — 6x6x2x150 = 10800#
WALL. 65x11x2 = 1430#
EARTH/SLAB 7x7x1.33x110 = 7169#

19399 x 0.6 = 11639 < 14220
N.G.

7x7x2x150 = 14700
8x8x1.33x110 = 9363
1430

25493 x 0.6 = 15295

F-7 7'-0 x 7'-0 x 24"

UPPER GARDEN TERRACE

Area = 25.7' x 24.67' = 317 SF

UPPER = 317 x 38 PSF = 12023#

BEAM — 1.33x3.75x150x25.7 = 19227#
Foot. 6x6x1x150 = 5400#
EARTH/SLAB 7x7x1.33x110 = 7169#
ROOF 317x10 = 3170#

34966 x 0.6 = 20970
OK

JOSE L. GUZMAN P.E.
4869 SW 75TH AVENUE
MIAMI, FLORIDA
PHONE 786 338 1082

JOB
SHEET NO. OF
CALCULATED BY DATE
CHECKED BY DATE
SCALE

Wall Footing

$\left(\frac{49}{2}+3\right)25 = 688$ PLF

$22 \times 65 = 1430$ PSF

2118

$\left(\frac{49}{2}+3\right)20 = 550$ PLF Roof

550

TOTAL $= 2118 + 550 + 300 = \frac{2968}{2000} \times 12 = 18.18''$

MecaWind Std v2.2.6.1 per ASCE 7-10

Developed by MECA Enterprises, Inc. Copyright www.mecaenterprises.com

Date	: 10/23/2015	Project No.	: JobNo
Company Name	: True	Designed By	: Engineer
Address	: Address	Description	: Description
City	: City	Customer Name	: Customer
State	: State	Proj Location	: Location

File Location: C:\1-projects\'1-2015\1500-sanchez rodrigues\sanchez.wnd

Input Parameters: Directional Procedure All Heights Building (Ch 27 Part 1)

Basic Wind Speed(V)	=	175.00 mph			
Structural Category	=	II	Exposure Category	=	C
Natural Frequency	=	N/A	Flexible Structure	=	No
Importance Factor	=	1.00	Kd Directional Factor	=	0.85
Alpha	=	9.50	Zg	=	900.00 ft
At	=	0.11	Bt	=	1.00
Am	=	0.15	Bm	=	0.65
Cc	=	0.20	l	=	500.00 ft
Epsilon	=	0.20	Zmin	=	15.00 ft
Slope of Roof	=	6 : 12	Slope of Roof(Theta)	=	26.57 Deg
h: Mean Roof Ht	=	27.75 ft	Type of Roof	=	GABLED
RHt: Ridge Ht	=	34.50 ft	Eht: Eave Height	=	21.00 ft
OH: Roof Overhang at Eave	=	3.00 ft	Overhead Type	=	OH w/ soffit
Bldg Length Along Ridge	=	55.00 ft	Bldg Width Across Ridge	=	48.00 ft

Gust Factor Calculations

Gust Factor Category I Rigid Structures - Simplified Method

Gust1: For Rigid Structures (Nat. Freq.>1 Hz) use 0.85 = 0.85

Gust Factor Category II Rigid Structures - Complete Analysis

Zm:	0.6*Ht	=	16.65 ft
lzm:	Cc*(33/Zm)^0.167	=	0.22
Lzm:	l*(Zm/33)^Epsilon	=	436.06 ft
Q:	(1/(1+0.63*((B+Ht)/Lzm)^0.63))^0.5	=	0.91
Gust2:	0.925*((1+1.7*lzm*3.4*Q)/(1+1.7*3.4*lzm))	=	0.88

Gust Factor Summary

Not a Flexible Structure use the Lessor of Gust1 or Gust2 = 0.85

Table 26.11-1 Internal Pressure Coefficients for Buildings, GCpi

GCPi : Internal Pressure Coefficient = +/-0.18

Wind Pressurs Main Wind Force Resisting System (MWFRS) - Ref Figure 27.4-1

Kh:	2.01*(Ht/Zg)^(2/Alpha)	=	0.97
Kht:	Topographic Factor (Figure 6-4)	=	1.00
Qh:	.00256*(V)^2*I*Kh*Kht*Kd	=	38.64 psf
Cpww:	Windward Wall Cp(Ref Fig 6-6)	=	0.80
Roof Area		=	3320.56 ft^2
Reduction Factor based on Roof Area		=	0.80

MWFRS-Wall Pressures for Wind Normal to 55 ft Wall (Normal to Ridge)

All pressures shown are based upon ASD Design, with a Load Factor of .6

Wall	Cp	Pressure +GCpi (psf)	Pressure -GCpi (psf)
Leeward Wall	-0.50	-23.37	-9.47
Side Walls	-0.70	-29.94	-16.03

Wall	Elev ft	Kz	Kzt	Cp	qz psf	Press +GCpi	Press -GCpi	Total +/-GCpi
Windward	21.00	0.91	1.00	0.80	36.43	17.82	31.73	41.19
Windward	11.00	0.85	1.00	0.80	33.94	16.13	30.03	39.50
Windward	1.00	0.85	1.00	0.80	33.94	16.13	30.03	39.50

Roof Location	Cp	Pressure +GCpi(psf)	Pressure -GCpi(psf)
Windward - Min Cp	-0.30	-16.81	-2.90
Windward - Max Cp	0.18	-1.04	12.87
Leeward Norm to Ridge	-0.60	-26.66	-12.75

Overhang Bottom Side (Windward only)	0.80	24.77	24.77

Notes - Normal to Ridge

Note (1) Per Fig 27.4-1 Note 7, Since Theta > 10 Deg base calcs on Mean Ht
Note (2) Wall & Roof Pressures = Qh*(G*Cp - GCPi)
Note (3) +GCpi = Positive Internal Bldg Press, -GCPi = Negative Internal Bldg Press
Note (4) Total Pressure = Leeward Press + Windward Press (For + or - GCPi)
Note (5) Ref Fig 27.4-1, Normal to Ridge (Theta>=10), Theta= 26.6 Deg, h/l= 0.50
Note (6) Overhang bottom based upon windward wall Cp and GCpi = 0.

MWFRS-Wall Pressures for Wind Normal to 48 ft wall (Along Ridge)

All pressures shown are based upon ASD Design, with a Load Factor of .6

Wall	Cp	Pressure +GCpi (psf)	Pressure -GCpi (psf)
Leeward Wall	-0.47	-22.42	-8.51
Side Walls	-0.70	-29.94	-16.03

Wall	Elev ft	Kz	Kzt	Cp	qz psf	Press +GCpi	Press -GCpi	Total +/-GCpi
Windward	34.50	1.01	1.00	0.80	40.45	20.55	34.46	42.97
Windward	21.00	0.91	1.00	0.80	36.43	17.82	31.73	40.24
Windward	11.00	0.85	1.00	0.80	33.94	16.13	30.03	38.54
Windward	1.00	0.85	1.00	0.80	33.94	16.13	30.03	38.54

Roof - Dist from Windward Edge	Cp	Pressure +GCpi (psf)	Pressure -GCpi (psf)
Roof: 0.0 ft to 13.9 ft	-0.90	-36.55	-22.64
Roof: 13.9 ft to 27.8 ft	-0.90	-36.45	-22.54
Roof: 27.8 ft to 55.0 ft	-0.50	-23.43	-9.53

Notes - Along Ridge

Note (1) Ref Fig 27.4-1, Parallel to Ridge (All), h/l= 0.50

Wind Pressure on Components and Cladding (Ch 30 Part 1)

All pressures shown are based upon ASD Design, with a Load Factor of .6

Width of Pressure Coefficient Zone "a" = = 4.80 ft

Description	Width ft	Span ft	Area ft^2	Zone	Max GCp	Min GCp	Max P psf	Min P psf
truss	2.00	31.00	320.3	1	0.30	-0.80	18.54	-37.86
truss	2.00	31.00	320.3	2	0.30	-1.20	18.54	-53.32
truss	2.00	31.00	320.3	2H	0.30	-2.20	11.59	-85.00
wall20'	1.00	20.00	133.3	4	0.80	-0.90	37.91	-41.78
wall 12	1.00	12.00	48.0	4	0.88	-0.98	40.94	-44.80
wall 12	1.00	12.00	48.0	5	0.88	-1.16	40.94	-51.75

Khcc:Comp. & Clad. Table 6-3 Case 1 = 0.97
Qhcc:.00256*V^2*Khcc*Kht*Kd = 38.64 psf

WIND LOAD TERRACE

MecaWind Std v2.2.6.1 per ASCE 7-10

Developed by MECA Enterprises, Inc. Copyright www.mecaenterprises.com

Date	: 10/21/2015	Project No.	: JobNo
Company Name	: True	Designed By	: Engineer
Address	: Address	Description	: Description
City	: City	Customer Name	: Customer
State	: State	Proj Location	: Location

File Location: E:\`1-2015\1520-sanchez rodrigues\sanchezterrace.wnd

Input Parameters: Directional Procedure Open Building (Ch 27 Part 1)

Basic Wind Speed(V)	=	175.00 mph			
Structural Category	=	II	Exposure Category	=	C
Natural Frequency	=	N/A	Flexible Structure	=	No
Importance Factor	=	1.00	Kd Directional Factor	=	0.85
Alpha	=	9.50	Zg	=	900.00 ft
At	=	0.11	Bt	=	1.00
Am	=	0.15	Bm	=	0.65
Cc	=	0.20	l	=	500.00 ft
Epsilon	=	0.20	Zmin	=	15.00 ft
Slope of Roof	=	6 : 12	Slope of Roof(Theta)	=	26.57 Deg
D: Roof Hor. Width	=	46.00 ft	L: Roof Length along Ridge	=	35.00 ft
h: Mean Roof Ht	=	16.00 ft	Type of Roof	=	PITCHED

Gust Factor Calculations

Gust Factor Category I Rigid Structures - Simplified Method

Gust1: For Rigid Structures (Nat. Freq.>1 Hz) use 0.85 = 0.85

Gust Factor Category II Rigid Structures - Complete Analysis

Zm:	0.6*Ht	=	15.00 ft
lzm:	Cc*(33/Zm)^0.167	=	0.23
Lzm:	l*(Zm/33)^Epsilon	=	427.06 ft
Q:	(1/(1+0.63*((B+Ht)/Lzm)^0.63))^0.5	=	0.93
Gust2:	0.925*((1+1.7*lzm*3.4*Q)/(1+1.7*3.4*lzm))	=	0.89

Gust Factor Summary

Not a Flexible Structure use the Lessor of Gust1 or Gust2 = 0.85

Normal to Ridge - Open Building - Pitched Roof per Figure 27.4-5:

Gamma = 0 & 180 degrees, Obstructed Wind Flow

Load Case	Cnw	Cnl	Windward Wind Pres. psf	Leeward Wind Pres. psf
A	-0.930	-0.930	-27.198	-27.198
B	-0.470	-1.370	-13.745	-40.066

Notes - Normal to Ridge

Along Ridge - Open Building - Pitched Roof per Figure 27.4-5:

Gamma = 90 degrees, Obstructed Wind Flow

Length Along Ridge of Roof	Roof Angle (Theta)	Load Case	Cn psf	Wind Pressure Along Ridge psf
<=16.0	Theta<=45 deg	A	-1.20	-35.094
		B	0.50	14.623
>16.0&<=2*16.0	Theta<=45 deg	A	-0.90	-26.321
		B	0.50	14.623

Notes - Along Ridge

Wind Pressure on Components and Cladding (Ch 30 Part 5)

All pressures shown are based upon ASD Design, with a Load Factor of .6

Width of Pressure Coefficient Zone "a" = = 3.00 ft

Description	Width ft	Span ft	Area ft^2	Zone	Cn Max	Cn Min	Max P psf	Min P psf
truss	2.00	31.00	320.3	1	0.50	-1.29	14.62	-37.77
truss	2.00	31.00	320.3	2	0.50	-1.29	14.62	-37.77
truss	2.00	31.00	320.3	3	0.50	-1.29	14.62	-37.77

5/31/2016 old cutler. 13940

NEW Const F/E

Inspection Schedule for jgarcell
Scheduled for May 31, 2016

Permit#	Address	Folio	Contractor
BLD-2015-7898	13940 OLD CUTLER RD	3350230020200	SANCHEZ ARANGO CONSTRUCTION (GENERAL) (305) 592-9252

Master Permit#

Owner
JEMARIE SANCHEZ

Description
NEW ONE STORY SFR WITH GARAGE , COVERED TERRACE,STORAGE & ENTRY PORCH (7383 SQ.FT.) Note: Fee Includes M,E.P) (5TH EDITION FBC 2014)

Previous: Action	Description	Complete	Result	Staff
700	NOC	5/23/16 3:05 pr	apprve	jgarcell
701	APPROVED FOUNDATION	5/23/16 3:05 pr	part	jgarcell

APPROVED PARTIAL PENDING ELECTRICAL BONDING J. GARCELL

Type: 703 STEM WALLS **Time:** 15:19

Notes: * Rejected

Comments:

Date: 5/31/16 **Signature:**

Type: 712 POURED CELLS 1ST FLOOR **Time:** 08:00

Notes: TIE DOWN * Rejected

Comments:

Date: 5/31/16 **Signature:**

* No permit/Plans @ JOB site, No Activity

M

2

Inspection Check List
VILLAGE OF PALMETTO BAY

5/23/2016

W/SIDE.
Old Cutler / N & S CARTEE Rd
F/E.

Inspection Schedule for jgarcell
Scheduled for May 23, 2016

Permit#	Address	Folio	Contractor
BLD-2015-7898	13940 OLD CUTLER RD	3350230020200	SANCHEZ ARANGO CONSTRUCTION (305) 592-9252

Master Permit#

Owner
JEMARIE SANCHEZ

Description
NEW ONE STORY SFR WITH GARAGE , COVERED TERRACE,STORAGE & ENTRY PORCH (7383 SQ.FT.) Note: Fee Includes M,E.P) (5TH EDITION FBC 2014)

Type: 700 NOC OK **Time:** 08:00

Notes:

Comments:

Date: 5/23/16 **Signature:**

Type: 701 FOUNDATION Partial Structural. **Time:** 08:00

Notes:

Comments: Pending Electrical Bonding

Date: 5/23/16 **Signature:**

5/23/16. ARCAT Soil Statement Letter Submitted (ATTACHED) OK

2

BELLON ARCHITECTURE, INC.

13131 SW 132 Street Suite 104
Miami Fl. 33186
T.305-278-7776
AA26002616

May 23, 2016

City of Palmetto Bay
Building & Zoning Department
City of Palmetto Bay, Fl.

Attn: Building Inspector

Re: **SOIL STATEMENT LETTER**
Mr. & Mrs. Rouget Sanchez Residence
13940 Old Cutler Road
Building Permit # 2015-7898

Dear Building Inspector;

We are the architects for the above referenced project.
We inspected the composition of the existing soil for the walls and columns footings and found that the soil is composed mostly of sand and coral rock fragments. The existing soil is suitable for the project design load.

Please feel free to contact the undersigned if additional information be needed.

Sincerely,

Leopoldo Bellon AIA, principal
Registered Architect

1/18/2017

old Cutler. 13940

Inspection Schedule for jgarcell
Scheduled for January 18, 2017

New Const. F/E.

Permit#	Address	Folio	Contractor
BLD-2015-7898	13940 OLD CUTLER RD	3350230020200	SANCHEZ ARANGO CONSTRUCTION (GENERAL) (305) 592-9252

Master Permit#

Owner
JEMARIE SANCHEZ

Description
NEW ONE STORY SFR WITH GARAGE , COVERED TERRACE,STORAGE & ENTRY PORCH (7383 SQ.FT.) Note: Fee Includes M,E.P) (5TH EDITION FBC 2014)

Previous:	Action	Description	Complete	Result	Staff
	700	NOC	5/23/16 3:05 pr	apprve	jgarcell
		APPROVED			
	712	POURED CELLS 1ST FLOOR	5/31/16 11:34 ai	denied	jgarcell
		TIE DOWN			
	703	STEM WALLS	5/31/16 11:34 ai	denied	jgarcell
		DENIED NO PERMIT ON JOB SITE NO ACTIVITY J. GARCELL			
	707	SLAB 1 ST FLOOR/ ELEVATION CERTIFICATE	8/31/16 8:34 ar	denied	jgarcell
		PROVIDE 1ST FLOOR ELEV CERTIFICATE SURVEY AT TIME OF INSPECTION, STEM WA			
	701	FOUNDATION	5/23/16 3:05 pr	part	jgarcell
		APPROVED PARTIAL PENDING ELECTRICAL BONDING J. GARCELL			

Type: 702 COLUMNS OK **Time:** 08:00

Notes: Attached Eng. P.E. Inspection Report submitted,

Comments:

Date: 1/18/ **Signature:**

Type: 708 COLUMN 1ST FLOOR OK **Time:** 08:00

Notes:

Comments:

Date: 1/18/17 **Signature:**

1st fl. Poured Cells. ok.

1

1/18/2017

Inspection Schedule for jgarcell
Scheduled for January 18, 2017

Permit#	Address	Folio	Contractor
BLD-2015-7898	13940 OLD CUTLER RD	3350230020200	SANCHEZ ARANGO CONSTRUCTION (GENERAL) (305) 592-9252

Master Permit#

Owner
JEMARIE SANCHEZ

Description
NEW ONE STORY SFR WITH GARAGE , COVERED TERRACE,STORAGE & ENTRY PORCH (7383 SQ.FT.) Note: Fee Includes M,E.P) (5TH EDITION FBC 2014)

Type: 711 TIE BEAM 1 ST FLOOR **Time:** 08:00

Notes: ok.

Comments: Attached Eng. P.E. / Inspection Report Submitted

Date: 1/18/17 **Signature:**

Jose L. Guzman P.E.

4869 SW 75th Avenue, Miami, Fl 33155
T. 786.338.1082 F. 305.260.0634
E-mail: Jguzmanalba@aol.com

INSPECTION REPORT #1

DATE:

1/12/17

PROJECT NAME AND ADDRESS:	**OWNERS NAME AND ADDRESS:**
Residence located at 13940 Old Cutler Road Palmetto Bay, FL.	

ITEMS INSPECTED:	***Location***	***Remarks/Drawing Reference***
Conc. tb entrance and lateral wall dinning. Conc. columns at kitchen area. Conc. beams at garage area and columns. Conc. beams and columns covered terrace area.		
		Structural drawing
COMMENTS:	***Location***	***Approval status***
As per structural plans		
	Ground level	• ***Approved***

INSPECTED BY:

JOSE LUIS GUZMAN
LICENSE
No. 56138
STATE OF FLORIDA
PROFESSIONAL ENGINEER

Special Inspector #7014120
Jose L. Guzman P.E.

Jose L. Guzman P.E.

4869 SW 75th Avenue, Miami, Fl 33155
T. 786.338.1082 F. 305.260.0634
E-mail: Jguzmanalba@aol.com

INSPECTION REPORT #2

DATE:

1/12/17

PROJECT NAME AND ADDRESS:	**OWNERS NAME AND ADDRESS:**
Residence located at 13940 Old Cutler Road Palmetto Bay, FL.	

ITEMS INSPECTED:	***Location***	***Remarks/Drawing Reference***
Conc. tb and colums bedroom 2 ,3, 4,5 and master area.		
		Structural drawing
COMMENTS:	***Location***	***Approval status***
As per structural plans		
	Ground level	• ***Approved***

INSPECTED BY:

JOSE L. GUZMAN
LICENSE
No. 56138
STATE OF FLORIDA
PROFESSIONAL ENGINEER

Special Inspector #7014120
Jose L. Guzman P.E.

2/1/2017 old cutler 13940 New const.

Inspection Schedule for jgarcell
Scheduled for February 01, 2017

Permit#	Address	Folio	Contractor
BLD-2015-7898	13940 OLD CUTLER RD	3350230020200	SANCHEZ ARANGO CONSTRUCTION (GENERAL) (305) 592-9252

Master Permit#

Owner
JEMARIE SANCHEZ

Description
NEW ONE STORY SFR WITH GARAGE (5TH EDITION FBC 2014)
COVERED TERRACE,STORAGE& ENTRY PORCH
(7383 SQ.FT.) Note: Fee Includes M,E.P)

Previous: Action	Description	Complete	Result	Staff
700	NOC	5/23/16 3:05 pr	apprve	jgarcell
712	APPROVED POURED CELLS 1ST FLOOR	5/31/16 11:34 ai	denied	jgarcell
712	TIE DOWN POURED CELLS 1ST FLOOR	1/18/17 8:49 ar	apprve	jgarcell
703	APPROVED J.GARCELL STEM WALLS	5/31/16 11:34 ai	denied	jgarcell
702	DENIED NO PERMIT ON JOB SITE NO ACTIVITY J. GARCELL COLUMNS	1/18/17 8:49 ar	apprve	jgarcell
708	APPROVED - ATTACHED OK, ENG PE INSPECTION REPORT SUBMITTED - J.GARCELL COLUMN 1ST FLOOR	1/18/17 8:49 ar	apprve	jgarcell
707	APPROVED - OK J.GARCELL SLAB 1 ST FLOOR/ ELEVATION CERTIFICATE	8/31/16 8:34 ar	denied	jgarcell
711	PROVIDE 1ST FLOOR ELEV CERTIFICATE SURVEY AT TIME OF INSPECTION, STEM WA TIE BEAM 1 ST FLOOR	1/18/17 8:49 ar	apprve	jgarcell
701	APPROVED - OK ATTACHED ENG PE INSPECTION REPORT SUBMITTED - J.GARCELL FOUNDATION	5/23/16 3:05 pr	part	jgarcell
785	APPROVED PARTIAL PENDING ELECTRICAL BONDING J. GARCELL ENG P.E LAB TILE UPLIFT TEST	1/18/17 8:49 ar	apprve	jgarcell
	APPROVED J.GARCELL			

2nd Fl Cols FROM Elev. 10' to 20' ok

Type: 708 COLUMN 1ST FLOOR **Time:** 08:00

Notes: Eng. P.E. Inspection Report. Submitted. (Attached)

Comments:

Date: 2/1/17 **Signature:**

2

Inspection Schedule for jgarcell
Scheduled for February 01, 2017

Permit#	Address	Folio	Contractor
BLD-2015-7898	13940 OLD CUTLER RD	3350230020200	SANCHEZ ARANGO CONSTRUCTION (GENERAL) (305) 592-9252

Master Permit#

Owner
JEMARIE SANCHEZ

Description
NEW ONE STORY SFR WITH GARAGE (5TH EDITION FBC 2014)
COVERED TERRACE,STORAGE& ENTRY PORCH
(7383 SQ.FT.) Note: Fee Includes M,E.P)

Type: 711 TIE BEAM 1 ST FLOOR ok. **Time:** 08:00

Notes: ENG. P.E. Inspection Report Submitted Attached.

Comments:

Date: 2/1/17 **Signature:**

Type: 712 POURED CELLS 1ST FLOOR ok **Time:** 08:00

Notes: ENG. P.E. Inspection Report Attached.

Comments:

Date: 2/1/17 **Signature:**

Jose L. Guzman P.E.

4869 SW 75th Avenue, Miami, Fl 33155
T. 786.338.1082 F. 305.260.0634
E-mail: Jguzmanalba@aol.com

INSPECTION REPORT #3

DATE:

1/20/17

PROJECT NAME AND ADDRESS:	**OWNERS NAME AND ADDRESS:**
Residence located at 13940 Old Cutler Road Palmetto Bay, FL.	

ITEMS INSPECTED:	***Location***	***Remarks/Drawing Reference***
Truss strap 12'-0" beam area.		
		Structural drawing
COMMENTS:	***Location***	***Approval status***
As per structural plans		
	Ground level	• ***Approved***

INSPECTED BY:

JOSE LUIS GUZMAN
LICENSE
No. 56138
STATE OF FLORIDA
PROFESSIONAL ENGINEER

Special Inspector #7014120
Jose L. Guzman P.E.

Jose L. Guzman P.E.

4869 SW 75th Avenue, Miami, Fl 33155
T. 786.338.1082 F. 305.260.0634
E-mail: Jguzmanalba@aol.com

INSPECTION REPORT #4

DATE:

1/30/17

PROJECT NAME AND ADDRESS:	**OWNERS NAME AND ADDRESS:**
Residence located at 13940 Old Cutler Road Palmetto Bay, FL.	

ITEMS INSPECTED:	***Location***	***Remarks/Drawing Reference***
Conc. columns and beams garage and center from 12' to 20'		
		Structural drawing
COMMENTS:	***Location***	***Approval status***
As per structural plans		
	Roof plan	• ***Approved***

INSPECTED BY:

JOSE LUIS GUZMAN
LICENSE
No. 56138
STATE OF FLORIDA
PROFESSIONAL ENGINEER

Special Inspector #7014120
Jose L. Guzman P.E.

TERMITE PRETREAT SPECIALISTS

1-800-DILIGENT
MyDiligent.com
State License JB228623

DILIGENT TERMITE SERVICES

Notice of Preventative Treatment for Termites

(as required by Florida Building Code (FBC) 2326.5 and Broward County Chapter FBC 105.2.2)

PEST CONTROL | LAWN, TREE & SHRUB CARE | TERMITE PROTECTION | MOSQUITO CONTROL | RODENT CONTROL

SERVICE ORDER NUMBER _____ SERVICE DATE 8.25.11 TIME 9:37-10:30am WEATHER CONDITIONS Clear

DEVELOPMENT NAME (PROJECT)	CONTRACTOR'S NAME	CONTACT PERSON
Rougets Residence	Sanchez Arango Construction	Andy
STRUCTURE ADDRESS (LOT/BLOCK)	CITY, STATE, ZIP CODE	COUNTY
13940 Old Cutler Rd	Palmetto Bay FL 33158	
CONTACT PHONE NUMBER	NOTES	
305-619-2268		

TREATMENT TYPE/AREA

☐ FLOATING ☑ MONOLITHIC ☐ PATIO ☐ GARAGE ☐ DRIVEWAY ☐ STEM WALL ☐ ADDITION
☐ CUTOUTS ☐ FOOTERS ☐ FRONT ENTRY ☐ EXTERIOR PERIMETER FOR RENEWAL ☐ OTHER _____

TREATMENT TYPE

☑ TAMP & TREAT ☐ TREAT ONLY ☐ FINAL ☐ RETREAT ☐ BORA CARE TREATMENT ☐ TERMITE BAIT STATION

PRODUCT

☐ DOMINION 2L ☑ ADONIS 2F ☐ PREMISE 75WPS ☐ DEMON TC ☐ TERMIDOR TC ☐ BORACARE ☑ OTHER Spray Dye

ACTIVE INGREDIENT Imid.

CONCENTRATION

☐ .05% ☐ .06% ☑ .1% ☐ .12% ☐ .25% ☐ OTHER ____ GALLONS APPLIED 400g

SQUARE FOOTAGE 8000 **LINEAR FOOTAGE** _____

SQUARE FOOTAGE VERIFIED

☑ YES ☐ NO ☐ MEASURED OR VERIFIED PER PLANS

JOB READY CONDITIONS MET

☑ YES ☐ NO DETAILS _____

SAFETY CONDITIONS good

DILIGENT TERMITE SERVICES, INC. CORPORATE SEAL 2007 FLORIDA

As per 2326.5 FBC - If soil chemical barrier method for termite prevention is used. Final exterior treatment shall be completed prior to final building approval.

Certificate of Compliance: The building has received a complete treatment for the prevention of subterranean termites. Treatment is in accordance with rules and laws established by the Florida Department of Agriculture and Consumer Services. (Per the Florida Building Code.)

If this notice is for the **final** exterior treatment, initial and date this line _____ (TERMITE MONITOR INSTALLED ☐ YES ☐ NO)

FINAL STICKER

☐ ELECTRICAL PANEL ☐ WATER HEATER OTHER _____

Payment Terms: Customer's payment in full is due at time of initial service. Customer agrees that a finance charge in the amount of 18% per annum will be assessed on all unpaid balances that are not satisfied by the due date. In the event a collection process becomes necessary to recover an unpaid balance the following fees will be assessed including but not limited to: collection service fee, attorney's fee, finance charges and non-sufficient funds payment fee. Customer will be responsible for paying all costs associated with any collection process.

8.25.11 _____
Date Applicator (Diligent Termite Pretreating, Inc.)

_____
Date Customer (Property Owner or Agent)

1-800-DILIGENT
MyDiligent.com

4/4/2017 old cutler 13940

Inspection Schedule for jgarcell
Scheduled for April 04, 2017

Permit#	Address	Folio	Contractor
BLD-2015-7898	13940 OLD CUTLER RD	3350230020200	SANCHEZ ARANGO CONSTRUCTION (GENERAL) (305) 592-9252

Master Permit#

Owner
JEMARIE SANCHEZ

Description
NEW ONE STORY SFR WITH GARAGE (5TH EDITION FBC 2014)
COVERED TERRACE,STORAGE& ENTRY PORCH
(7383 SQ.FT.) Note: Fee Includes M,E.P)

Type: 702 COLUMNS **Time:** 08:00

Notes: 1st FL. Approved on 1/19/17

Comments:

Date: 4/4/17 **Signature:**

Type: 704 COMPACTION CERT OR SOIL LETTER **Time:** 08:00

Notes: Recorded

Comments: Provide Eng. P.E. compaction & Density Test.

Date: 4/4/17 **Signature:**

Type: 705 TERMITE TREATMENT **Time:** 08:00

Notes: Certificate Submitted. (Attached)

Comments: OK

Date: 4/4/17 **Signature:**

3

Inspection Schedule for jgarcell
Scheduled for April 04, 2017

Permit# BLD-2015-7898

Address 13940 OLD CUTLER RD

Folio 3350230020200

Contractor SANCHEZ ARANGO CONSTRUCTION (GENERAL)
(305) 592-9252

Master Permit#

Owner JEMARIE SANCHEZ

Description
NEW ONE STORY SFR WITH GARAGE (5TH EDITION FBC 2014)
COVERED TERRACE,STORAGE& ENTRY PORCH
(7383 SQ.FT.) Note: Fee Includes M,E.P)

Type: 721 ROOF TRUSSES/BRACING — Rejected **Time:** 08:00

Notes:

Comments: Need Trusses Shop Dwgs.

Date: 4/4/17 **Signature:**

Type: 722 ROOF SHEATHING. OK **Time:** 08:00

Notes:

Comments:

Date: 4/4/17 **Signature:**

Type: 724 ROOF FRAMING N/A **Time:** 08:00

Notes:

Comments:

Date: 4/4/17 **Signature:**

4/4/2017

Inspection Schedule for jgarcell
Scheduled for April 04, 2017

Permit#	Address	Folio	Contractor
BLD-2015-7898	13940 OLD CUTLER RD	3350230020200	SANCHEZ ARANGO CONSTRUCTION (GENERAL) (305) 592-9252

Master Permit#

Owner
JEMARIE SANCHEZ

Description
NEW ONE STORY SFR WITH GARAGE (5TH EDITION FBC 2014)
COVERED TERRACE,STORAGE& ENTRY PORCH
(7383 SQ.FT.) Note: Fee Includes M,E.P)

Inspection Schedule for jgarcell
Scheduled for April 04, 2017

Permit#	Address	Folio	Contractor
BLD-2015-7898	13940 OLD CUTLER RD	3350230020200	SANCHEZ ARANGO CONSTRUCTION (GENERAL) (305) 592-9252

Master Permit#

Owner
JEMARIE SANCHEZ

Description
NEW ONE STORY SFR WITH GARAGE (5TH EDITION FBC 2014)
COVERED TERRACE,STORAGE& ENTRY PORCH
(7383 SQ.FT.) Note: Fee Includes M,E.P)

Previous:	Action	Description	Complete	Result	Staff
	700	NOC	5/23/16 3:05 pr	apprve	jgarcell
		APPROVED			
	712	POURED CELLS 1ST FLOOR	5/31/16 11:34 ai	denied	jgarcell
		TIE DOWN			
	712	POURED CELLS 1ST FLOOR	1/18/17 8:49 ar	apprve	jgarcell
		APPROVED J.GARCELL			
	703	STEM WALLS	5/31/16 11:34 ai	denied	jgarcell
		DENIED NO PERMIT ON JOB SITE NO ACTIVITY J. GARCELL			
	712	POURED CELLS 1ST FLOOR	2/1/17 2:50 pm	apprve	jgarcell
		APPROVED J.GARCELL - OK - ENG PE INSPECTION REPORT SUBMITTED ATTACHED			
	702	COLUMNS	1/18/17 8:49 ar	apprve	jgarcell
		APPROVED - ATTACHED OK, ENG PE INSPECTION REPORT SUBMITTED - J.GARCELL			
	708	COLUMN 1ST FLOOR	1/18/17 8:49 ar	apprve	jgarcell
		APPROVED - OK J.GARCELL			
	707	SLAB 1 ST FLOOR/ ELEVATION CERTIFICATE	8/31/16 8:34 ar	denied	jgarcell
		PROVIDE 1ST FLOOR ELEV CERTIFICATE SURVEY AT TIME OF INSPECTION, STEM WA			
	711	TIE BEAM 1 ST FLOOR	1/18/17 8:49 ar	apprve	jgarcell
		APPROVED - OK ATTACHED ENG PE INSPECTION REPORT SUBMITTED - J.GARCELL			
	701	FOUNDATION	5/23/16 3:05 pr	part	jgarcell
		APPROVED PARTIAL PENDING ELECTRICAL BONDING J. GARCELL			
	708	COLUMN 1ST FLOOR	2/1/17 2:50 pm	apprve	jgarcell
		APPROVED J.GARCELL - SECOND FL COLS, FROM ELEV 10' TO 20' OK			
	711	TIE BEAM 1 ST FLOOR	2/1/17 2:50 pm	apprve	jgarcell
		APPROVED J.GARCELL - OK - ENG PE INSPECTION REPORT SUBMITTED ATTACHED			
	785	ENG P.E LAB TILE UPLIFT TEST	1/18/17 8:49 ar	apprve	jgarcell
		APPROVED J.GARCELL			
	785	ENG P.E LAB TILE UPLIFT TEST	2/1/17 2:50 pm	apprve	jgarcell
		APPROVED J.GARCELL - SUBMITTED ATTACHED			

Permit Action Report
VILLAGE OF PALMETTO BAY

Permit #: BLD-2015-7898
Master permit #:

Permit type: bnew - NEW CONSTRUCTION RESIDI
Routing queue: b10 - NEW CONSTRUCTION RESIDEI

Address: 13940 OLD CUTLER RD
PALMETTO BAY, FL 33158

Group # - Name	Action Code	Action Description	Completion Date	Completion Code	Completed By	Comments
1 - PERMIT COUNTER	intake	APPLICATION INTAKE	10/26/2015		jvillegas	
1 - PERMIT COUNTER	cuff	COLLECT UPFRONT FEE	10/26/2015		jvillegas	
2 - PLANS PROCESSING	routeplans	ROUTE PLANS FOR REVIEW	10/26/2015		jvillegas	
3 - ZONING REVIEW	zrev	ZONING REVIEW	10/28/2015	denied	mrodriguez	1- PROVIDE DEMOLITION PERMIT FOR EXISTING HOUSE 2- PROVIDE DERM APPROVAL (STAMP) 3- PROVIDE CORRECT SIZE (AS PER PROPERY APPRAISALS 38768 SQ FT) PROVIDE NOTE THAT FRONT WALL REQUIRES SEPERATE PERMIT 4- PROVIDE COMPLETE ZONING LEGENDE (LANDSCAPE INFORMATION AS PER SECTION 30-50 OF VI;;AGE OF PALMETTO BAY ZONING CODE) 5-MAXIMUN SIZE F9OR GARAGE IS 500 SQUARE FEET AS PER DEFINITION 30-40 6- PROVIDE LOT COVERAGE BREAKDOWN (MUST INCLUDE EVERYTHING UNDER ROOF AND OVERHANGS AS PER DEFINITION 30-40) 7-PROVIDE NUMBER OF STORIES AS PART OF THE ZONING LEGEND 8-PROVIDE SETBACKS ON CONCRETE PAVERS 9-PROVIDE LANDSCAPE PLAN AS PER SECTION 30-100 10- ADDITIONAL COMMENTS WILL BE PROVIDED UPON REVIEW OF A DETAIL RE-SUBMITTAL. THE VILLAGE OF PALMETTO BAY RESERVES THE RIGHT TO COMMENT FURTHER IN THE PROJECTS AS DETAILS AND/OR EXPLANATIONS ARE PROVIDED AND MAY REVISE PREVIOUS COMMENTS BASED ON THE ADDITIONAL COMMENTS PROVIDED.

Permit #: BLD-2015-7898
Master permit #:

Permit type: bnew - NEW CONSTRUCTION RESIDI
Routing queue: b10 - NEW CONSTRUCTION RESIDEI

Address: 13940 OLD CUTLER RD
PALMETTO BAY, FL 33158

Group # - Name	Action Code	Action Description	Completion Date	Completion Code	Completed By	Comments
4 - BUILDING REVIEW	brev	BUILDING REVIEW	12/8/2015	denied	ogarcia	1. Need DERM and HRS approval 2. Need demolition permit for existing structures, septic tank, pool, etc. 3. Provide Flood criteria notes 4. Clarify method of rain water disposal converging from covered terrace and great room roofs. Note that the garage floor is the lowest level. 5. Show electric and water on site plan 6. Electric panel "B" calls out for irrigation pump. Show location and proposed irrigation well. 7. Provide special inspector from for soil/fill compaction reinforced masonry, truss installation and bracing 8. Please address summer kitchen equipment. Is BBQ gas? Need details of exhaust hood dotted in on floor plan. Electrical? 9. 8"x8" conc. Cap shown over window openings must address structurally. 10. Architectural wall sections on A-4 and A-5 show regular overhangs, but typical wall section on A-6 shows a cant called out as an overhang. Please clarify. 11. Soffit must have plywood under lath and stucco when 24" or more 12. Overhangs shown on sections on s-3 do not match those on A-6 13. Roof slope 6112 on sheet A-2 and A-3 and 7:12 on A6 14. 5/8" drywall is not for exterior ceilings. Please revise sections 15. Describe components of metal roof on typ. Section 16. Specify on window and door schedules glass specs required on energy calcs. 17. Please provide narrative addressing all comments and the location of revisions.
4 - BUILDING REVIEW	brev	BUILDING REVIEW	5/3/2016	apprve	ogarcia	05.03.16 Building approved Orestes Garcia gb

Permit #: BLD-2015-7898
Master permit #:

Permit type: bnew - NEW CONSTRUCTION RESIDI
Routing queue: b10 - NEW CONSTRUCTION RESIDEI

Address: 13940 OLD CUTLER RD
PALMETTO BAY, FL 33158

Group # - Name	Action Code	Action Description	Completion Date	Completion Code	Completed By	Comments
6 - ELECTRICAL REVIEW	erev	ELECTRICAL REVIEW	11/2/2015	denied	slugo	ELECTRICAL DENIED 1. E2 RISERS DOES NOTR INCLUDE PANEL C 2. PANELS IN LAUNDRY MUST COMPLY NEC 110.26 WORKING SPACE
6 - ELECTRICAL REVIEW	erev	ELECTRICAL REVIEW	1/25/2016	apprve	tflingos	ELECTRICIAL APPROVED
7 - MECHANICAL REVIEW	mrev	MECHANICAL REVIEW	11/3/2015	apprve	rregula	MECHANICAL APPROVED
8 - PLUMBING REVIEW	prev	PLUMBING REVIEW	10/30/2015	denied	gurgelles	1. PROVIDE DEPT OF HEALTH APPROVAL. 2. PROVIDE DERM APPROVAL 3. PROVIDE WASD WATER VERIFICATION LETTER
8 - PLUMBING REVIEW	prev	PLUMBING REVIEW	4/15/2016	apprve	gurgelles	PLUMBING APPROVED
8 - PLUMBING REVIEW	prev	PLUMBING REVIEW	3/8/2016	denied	gurgelles	PLUMBING DENIED SAME COMMENTS
8 - PLUMBING REVIEW	prev	PLUMBING REVIEW	1/25/2016	denied	gurgelles	PLUMBING DENIED SAME COMMENTS 1. PROVIDE DEPT OF HEALTH APPROVAL. 2. PROVIDE DERM APPROVAL 3. PROVIDE WASD WATER VERIFICATION LETTER
9 - PUBLIC WORKS	pwrevc	PUBLIC WORK REVIEW	11/17/2015	denied	dcasals	11.17.15 Pworks denied D.Casals -gb 1) Provide DERM approval. 2) Provide WASD water verification letter. 3) Provide Dept of Health Approval.

Permit #: BLD-2015-7898
Master permit #:

Permit type: bnew - NEW CONSTRUCTION RESIDI
Routing queue: b10 - NEW CONSTRUCTION RESIDEI

Address: 13940 OLD CUTLER RD
PALMETTO BAY, FL 33158

Group # - Name	Action Code	Action Description	Completion Date	Completion Code	Completed By	Comments
9 - PUBLIC WORKS	pwrevc	PUBLIC WORK REVIEW	3/8/2016	denied	dcasals	PUBLC WORKS DENIED 1. PROVIDE DERM APPROVAL 2. PROVIDE WASD WATER VERIFICATION LETTER 3. PROVIDE DEPT. OF HEALTH APPROVAL 4. MIAMI DADE COUNTY PERMIT NEEDED FOR DRIVEWAY APPROACH ON OLD CUTLER RD 5. PROPERTY OWNER MUST ENTER INTO A COVENANT FOR MAINTENANCE OF LANDSCAPING WITHIN RIGHT OF WAYAGREEMENT WITH MIAMI DADE COUNTY PUBLIC WORKS 6. MIAMI DADE COUNTY PERMIT NEEDED FOR WORK WITHIN OLD CUTLER RD RIGHT OF WAY STANDARD COMMENTS 1. THE PUBLC WORKS DEPARTMENT RESERVES THE RIGHT TO ADD OR MODIFY REQUIREMENTS BASED UPON ANY ADDITIONAL INFORMATION THAT MAY BE RECEIVED DURING AND AFTER THIS REVIEW PROCESS

Permit #: BLD-2015-7898
Master permit #:

Permit type: bnew - NEW CONSTRUCTION RESIDI
Routing queue: b10 - NEW CONSTRUCTION RESIDEI

Address: 13940 OLD CUTLER RD
PALMETTO BAY, FL 33158

Group # - Name	Action Code	Action Description	Completion Date	Completion Code	Completed By	Comments
20 - INSPECTIONS	703	STEM WALLS	2/15/2019		gbilbraut	
20 - INSPECTIONS	602	2ND FLOOR SLAB-ELECTRICAL	2/15/2019		gbilbraut	
20 - INSPECTIONS	603	EXT UNDERGROUND	2/15/2019		gbilbraut	
20 - INSPECTIONS	607	SERVICE W/W	2/15/2019		gbilbraut	
20 - INSPECTIONS	604	ELECTRICAL ROUGH	2/15/2019		gbilbraut	
20 - INSPECTIONS	201	UNDERGROUND	2/15/2019		gbilbraut	
20 - INSPECTIONS	202	PARTIAL-MECH	2/15/2019		gbilbraut	
20 - INSPECTIONS	200	ROUGH-MECH	2/15/2019		gbilbraut	
20 - INSPECTIONS	302	TEMP TOILET	2/15/2019		gbilbraut	
20 - INSPECTIONS	303	UNDERGROUND	2/15/2019		gbilbraut	
20 - INSPECTIONS	304	GROUND ROUGH	2/15/2019		gbilbraut	
20 - INSPECTIONS	305	TOP OUT	2/15/2019		gbilbraut	
20 - INSPECTIONS	306	TUB & WATER PIPING	2/15/2019		gbilbraut	
20 - INSPECTIONS	307	WATER SERVICE	2/15/2019		gbilbraut	
20 - INSPECTIONS	308	SEWER CONNECTION	2/15/2019		gbilbraut	
20 - INSPECTIONS	320	LP TANK	2/15/2019		gbilbraut	
20 - INSPECTIONS	701	FOUNDATION	5/23/2016	part	jgarcell	APPROVED PARTIAL PENDING ELECTRICAL BONDING J. GARCELL ARCHITECT SOIL STATEMENT LETTER OKAY SUBMITTED J. GARCELL
20 - INSPECTIONS	701	FOUNDATION	2/15/2019		gbilbraut	
20 - INSPECTIONS	704	COMPACTION CERT OR SOIL LETTE	4/4/2017	denied	jgarcell	DENIED J.GARCELL - COMPACTION CERT - PROVIDE ENG Pe COMPACTION AND DENSITY TEST
20 - INSPECTIONS	704	COMPACTION CERT OR SOIL LETTE	2/15/2019		gbilbraut	
20 - INSPECTIONS	705	TERMITE TREATMENT	4/4/2017	apprve	jgarcell	APPROVED J.GARCELL - CERTIFICATE SUBMITTED ATTACHED OK
20 - INSPECTIONS	702	COLUMNS	1/18/2017	apprve	jgarcell	APPROVED - ATTACHED OK, ENG PE INSPECTION REPORT SUBMITTED - J.GARCELL
20 - INSPECTIONS	708	COLUMN 1ST FLOOR	1/18/2017	apprve	jgarcell	APPROVED - OK J.GARCELL
20 - INSPECTIONS	716	COLUMNS 2ND FLOOR	2/15/2019		gbilbraut	
20 - INSPECTIONS	707	SLAB 1 ST FLOOR/ ELEVATION CER	8/31/2016	denied	jgarcell	PROVIDE 1ST FLOOR ELEV CERTIFICATE SURVEY AT TIME OF INSPECTION, STEM WALLS FILL CELLS AND COLUMNS TERMITE SOIL TREATMENT CERT. REJECTED NEED TO PROVIDE CERITICAT AT TIME OF INPSECTION
20 - INSPECTIONS	707	SLAB 1 ST FLOOR/ ELEVATION CER	2/15/2019		gbilbraut	

Permit #: BLD-2015-7898
Master permit #:

Permit type: bnew - NEW CONSTRUCTION RESIDI
Routing queue: b10 - NEW CONSTRUCTION RESIDEI

Address: 13940 OLD CUTLER RD
PALMETTO BAY, FL 33158

Group # - Name	Action Code	Action Description	Completion Date	Completion Code	Completed By	Comments
20 - INSPECTIONS	121	FINAL ZONING	2/15/2019		gbilbraut	
20 - INSPECTIONS	121	FINAL ZONING	1/31/2019	apprve		APPROVED AS PER JV
20 - INSPECTIONS	115	FINAL ELEVATION CERTIFICATE	1/17/2019	apprve	jvillegas	
20 - INSPECTIONS	110	FINAL SURVEY	1/17/2019	apprve	jvillegas	
20 - INSPECTIONS	758	FINAL STRUCTURAL BUILDING	2/4/2019	apprve	mtcausley	Approved by Kassner Flood cert 1597
20 - INSPECTIONS	issueco	CERTIFICATE OF OCCUPANCY/COM	2/15/2019		gbilbraut	
20 - INSPECTIONS	708	COLUMN 1ST FLOOR	2/1/2017	apprve	jgarcell	APPROVED J.GARCELL - SECOND FL COLS, FROM ELEV 10' TO 20' OK
20 - INSPECTIONS	711	TIE BEAM 1 ST FLOOR	2/1/2017	apprve	jgarcell	APPROVED J.GARCELL - OK - ENG PE INSPECTION REPORT SUBMITTED ATTACHED
20 - INSPECTIONS	702	COLUMNS	4/4/2017	apprve	jgarcell	APPROVED J.GARCELL - 1ST FL (01/19/2017)

CITY OF PALMETTO BAY

1. Need DERM and HRS approval
RESPONSE: See stamp approval.

2. Need demolition permit for existing structures, septic tank, pool, etc.
RESPONSE: See approval demolition permit.
3. Provide Flood criteria notes
RESPONSE: Please see sheet SP-1 (Cloud # 1).

4. Clarify method of rain water disposal converging from covered terrace and great room roofs. Note that the garage floor is the lowest level.
RESPONSE: Please see sheet A-4, and see Overhand / Gutter detail. (CLOUD # 1).

5. Show electric and water on site plan.
RESPONSE: Please see sheet SP-1 (CLOUD # 1).

6. Electric panel ?B? calls out for irrigation pump. Show location and proposed irrigation well.
RESPONSE: Irrigation pump removed from plans. See sheet E-2.

7. Provide special inspector from for soil/fill compaction reinforced masonry, truss installation and bracing.
RESPONSE: Please see attached form.

8. Please address summer kitchen equipment. Is BBQ gas? Need details of exhaust hood dotted in on floor plan. Electrical?
RESPONSE: Please see sheet E-1, and see Cook Hood Exhaust Riser detail and see Sheet E-2. (Cloud # 1).

9. 8?x8? conc. Cap shown over window openings must address structurally.
RESPONSE: Please see sheet A-5

10. Architectural wall sections on A-4 and A-5 show regular overhangs, but typical wall section on A-6 shows a cant called out as an overhang. Please clarify.
RESPONSE: Please see sheet A-6 (CLOUD # 1)

11. Soffit must have plywood under lath and stucco when 24? or more
RESPONSE: Please see sheet A-4, A-5, A-6.

12. Overhangs shown on sections on s-3 do not match those on A-6
RESPONSE: Please see sheet A-6.

13. Roof slope 6112 on sheet A-2 and A-3 and 7:12 on A6
RESPONSE: Please see sheet A-6.

14. 5/8? drywall is not for exterior ceilings. Please revise sections
RESPONSE: Please see sheet A-4 Section B, and Sheet A-5 Section C.

15. Describe components of metal roof on typ. Section
RESPONSE: Please see note sheet A-6

16. Specify on window and door schedules glass specs required on energy calcs.
RESPONSE: Please see sheet A-2, A-3.
17. Please provide narrative addressing all comments and the location of revisions.

Home Citizen Services Human Resources Business Services

Permits & Inspections: Actions My Profile Log Off Help Contact

BLD-2015-7898

Applied	Approved	Issued	Final	Expires
10/26/2015				09/10/2016

Type **NEW CONSTRUCTION RESIDENTIAL 1 OR 2 STORY**

Status **pending**

Permit Description

NEW SFR 6600 SQ FT (5TH EDITION FBC 2014)

Permit Address **13940 OLD CUTLER RD PALMETTO BAY FL 33158**

Applicant **JEMARIE SANCHEZ** Owner **Y** Cust# **00023384**

Owner **JEMARIE SANCHEZ**

Viewing Actions <-- Select the information you would like to view.

Group	Action	Approver	Start Date	Comp'd Date	Comp'd Code	Comment
PERMIT COUNTER	intake - APPLICATION INTAKE	jvillegas		10/26/2015		
PERMIT COUNTER	cuff - COLLECT UPFRONT FEE	jvillegas		10/26/2015		
PLANS PROCESSING	routeplans - ROUTE PLANS FOR REVIEW	jvillegas		10/26/2015		
ZONING REVIEW	zrev - ZONING REVIEW	mrodriguez		10/28/2015	Denied	1- PROVIDE DEMOLITION PERMIT FOR EXISTING HOUSE 2- PROVIDE DERM APPROVAL (STAMP) 3- PROVIDE CORRECT SIZE (AS PER PROPERY APPRAISALS 38768 SQ FT) PROVIDE NOTE THAT FRONT WALL REQUIRES SEPERATE PERMIT 4- PROVIDE COMPLETE ZONING LEGENDE (LANDSCAPE INFORMATION AS PER SECTION 30-50 OF VI;;AGE OF PALMETTO BAY ZONING CODE) 5-MAXIMUN SIZE F9OR GARAGE IS 500 SQUARE FEET AS PER DEFINITION 30-40 6- PROVIDE LOT COVERAGE BREAKDOWN (MUST INCLUDE EVERYTHING UNDER ROOF AND OVERHANGS AS PER DEFINITION 30-40) 7-PROVIDE NUMBER OF STORIES AS PART OF THE ZONING LEGEND 8-PROVIDE SETBACKS ON CONCRETE PAVERS 9-PROVIDE LANDSCAPE PLAN AS PER SECTION 30-100 10- ADDITIONAL COMMENTS WILL BE PROVIDED UPON REVIEW OF A DETAIL RE-SUBMITTAL. THE VILLAGE OF PALMETTO BAY RESERVES THE RIGHT TO COMMENT FURTHER IN THE PROJECTS AS DETAILS AND/OR EXPLANATIONS ARE PROVIDED AND MAY REVISE PREVIOUS COMMENTS

					BASED ON THE ADDITIONAL COMMENTS PROVIDED.
ZONING REVIEW	zrev - ZONING REVIEW	mrodriguez	01/20/2016	Denied	1- PROVIDE DEMOLITION PERMIT FOR EXISTING HOUSE 2- PROVIDE DERM APPROVAL (STAMP) 3- LANDSCAPE LEGEND MUST BE ACCORDING TO PALMETTO BAY ZONING CODE CHAPTER 30 NOT DADE COUNTY 33 4- PROVIDE HEIGHT TO ROOF RIDGE (A-3)D 5- PROVIDE DECLARATION OF USE 6- PROVIDE DERM TREE PERMIT FOR RELOCATION 7- ADDITIONAL COMMENTS WILL BE PROVIDED UPON REVIEW OF A DETAIL RE-SUBMITTAL. THE VILLAGE OF PALMETTO BAY RESERVES THE RIGHT TO COMMENT FURTHER IN THE PROJECTS AS DETAILS AND/OR EXPLANATIONS ARE PROVIDED AND MAY REVISE PREVIOUS COMMENTS BASED ON THE ADDITIONAL COMMENTS PROVIDED.
BUILDING REVIEW	brev - BUILDING REVIEW	soliver	10/30/2015	Pending	
BUILDING REVIEW	brev - BUILDING REVIEW	ogarcia	03/02/2016	Denied	BUILDING DENIED 1. SECOND REVIEW. NEED NARRATIVE ADDRESSING ALL COMMENTS INCLUDING THE LOCATION OF THE REVISIONS FOR 12/8/15 REVIEW
BUILDING REVIEW	brev - BUILDING REVIEW	ogarcia	12/08/2015	Denied	1. Need DERM and HRS approval 2. Need demolition permit for existing structures, septic tank, pool, etc. 3. Provide Flood criteria notes 4. Clarify method of rain water disposal converging from covered terrace and great room roofs. Note that the garage floor is the lowest level. 5. Show electric and water on site plan 6. Electric panel ? B? calls out for irrigation pump. Show location and proposed irrigation well. 7. Provide special inspector from for soil/fill compaction reinforced masonry, truss installation and bracing 8. Please address summer kitchen equipment. Is BBQ gas? Need details of exhaust hood dotted in on floor plan. Electrical? 9. 8?x8? conc. Cap shown over window openings must address structurally. 10. Architectural wall sections on A-4 and A-5 show regular overhangs, but typical wall section on A-6 shows a cant called out as an overhang. Please clarify. 11. Soffit must have plywood under lath and stucco when 24? or more 12. Overhangs shown on sections on s-3 do not match those on A-6 13.

					Roof slope 6112 on sheet A-2 and A-3 and 7:12 on A6 14. 5/8? drywall is not for exterior ceilings. Please revise sections 15. Describe components of metal roof on typ. Section 16. Specify on window and door schedules glass specs required on energy calcs. 17. Please provide narrative addressing all comments and the location of revisions.
STRUCTURAL REVIEW	srev - STRUCTURAL REVIEW	soliver	10/30/2015	Pending	
STRUCTURAL REVIEW	srev - STRUCTURAL REVIEW	mcankat	03/09/2016	Denied	STRUCTURAL DENIED 1. ALL PREVIOUS COMMENTS DATED NOVEMBER 24, 2015 ARE STILL OUTSTANDING 2. RESPOND IN WRITING, PROVIDE NARRATIVE
STRUCTURAL REVIEW	srev - STRUCTURAL REVIEW	mcankat	11/30/2015	Denied	11.24.15 Structural Denied M.Cankat-gb 1) Governing Building COde is Florida Building Code 2014, 5th Edition/ high velocity Hurricane Zone sections. 2) Update ACI & Masonry code references to latest revision datesw as per F.B.C 2014. 3) F6.5 and F7.0 are not in the footing schedule. 4) Show F4X6 and F7X12.5 on foundation plan. If they are not used delete from the footing schedule. 5) Indicate number of plies for girder trusses on framing plans. 6) Some girder trusses are supported at very close to the corner of the walls. Locate the center of the connection from the corner (Provide distance dimension) Check the edge distance of the bolts, if requried revise the typical connection detail. 7) Provide wind design pressures for the windows and doors and post them on Architectural elevations. 8) Truss connectors should have adequate strength for combined uplift and lateral forces. Provide calculation that typical truss with longest span have adequate fastener capacity for combined loads and satisfy the untiy equation. 9) Please provide a narrative describing the revisions is made.
ELECTRICAL REVIEW	erev - ELECTRICAL REVIEW	slugo	11/02/2015	Denied	ELECTRICAL DENIED 1. E2 RISERS DOES NOTR INCLUDE PANEL C 2. PANELS IN LAUNDRY MUST COMPLY NEC 110.26 WORKING SPACE
ELECTRICAL REVIEW	erev - ELECTRICAL REVIEW	tflingos	01/25/2016	Approved	ELECTRICIAL APPROVED
MECHANICAL REVIEW	mrev - MECHANICAL REVIEW	rregula	11/03/2015	Approved	MECHANICAL APPROVED
PLUMBING REVIEW	prev - PLUMBING REVIEW	gurgelles	10/30/2015	Denied	1. PROVIDE DEPT OF HEALTH APPROVAL. 2.

					PROVIDE DERM APPROVAL 3. PROVIDE WASD WATER VERIFICATION LETTER
PLUMBING REVIEW	prev - PLUMBING REVIEW	gurgelles	03/08/2016	Denied	PLUMBING DENIED SAME COMMENTS
PLUMBING REVIEW	prev - PLUMBING REVIEW	gurgelles	01/25/2016	Denied	PLUMBING DENIED SAME COMMENTS 1. PROVIDE DEPT OF HEALTH APPROVAL. 2. PROVIDE DERM APPROVAL 3. PROVIDE WASD WATER VERIFICATION LETTER
PUBLIC WORKS	pwrevc - PUBLIC WORK REVIEW	dcasals	11/17/2015	Denied	11.17.15 Pworks denied D.Casals -gb 1) Provide DERM approval. 2) Provide WASD water verification letter. 3) Provide Dept of Health Approval.
PUBLIC WORKS	pwrevc - PUBLIC WORK REVIEW	dcasals	03/08/2016	Denied	PUBLC WORKS DENIED 1. PROVIDE DERM APPROVAL 2. PROVIDE WASD WATER VERIFICATION LETTER 3. PROVIDE DEPT. OF HEALTH APPROVAL 4. MIAMI DADE COUNTY PERMIT NEEDED FOR DRIVEWAY APPROACH ON OLD CUTLER RD 5. PROPERTY OWNER MUST ENTER INTO A COVENANT FOR MAINTENANCE OF LANDSCAPING WITHIN RIGHT OF WAYAGREEMENT WITH MIAMI DADE COUNTY PUBLIC WORKS 6. MIAMI DADE COUNTY PERMIT NEEDED FOR WORK WITHIN OLD CUTLER RD RIGHT OF WAY STANDARD COMMENTS 1. THE PUBLC WORKS DEPARTMENT RESERVES THE RIGHT TO ADD OR MODIFY REQUIREMENTS BASED UPON ANY ADDITIONAL INFORMATION THAT MAY BE RECEIVED DURING AND AFTER THIS REVIEW PROCESS
PUBLIC WORKS	pwrevc - PUBLIC WORK REVIEW	dcasals	02/09/2016	Denied	PUBLIC WORKS DENIED 1. PROVIDE DERM APPROVAL 2. PROVIDE WASD WATER VERIFICATION LETTER 3. PROVIDE DEPT OF HEALTH APPROVAL 4. MIAMI DADE COUNTY PERMIT NEEDED FOR DRIVEWAY 5. PROPERTY OWNER MUST ENTER INTO A COVENANT FOR MAINTENANCE OF LANDSCAPING WITHIN RIGHT OF WAY AGREEMENT WITH MIAMI DADE COUNTY PUBLIC WORKS STANDARD COMMENTS: 1. THE PUBLIC SERVICES DEPARTMENT RESERVES THE RIGHT TO ADD OR MODIFY REQUIREMENTS BASED UPON ANY ADDITIONAL INFORMATION THAT MAY BE RECEIVED DURING AND AFTER THIS REVIEW PROCESS.
PLANNING	pzrev - PLANNING & ZONING REVIEW				
IMPACT FEES					

	notifycust - NOTIFY CUSTOMER
PLANS PROCESSING	notifycust - NOTIFY CUSTOMER
PERMIT COUNTER	review - REVIEW
PERMIT COUNTER	verifycont - VERIFY CONTRACTOR
PERMIT COUNTER	collissue - COLLECT FEES/ISSUE PERMIT
INSPECTIONS	700 - NOC
INSPECTIONS	601 - FOUNDATION GROUNDING
INSPECTIONS	100 - SETBACK
INSPECTIONS	703 - STEM WALLS
INSPECTIONS	602 - 2ND FLOOR SLAB-ELECTRICAL
INSPECTIONS	603 - EXT UNDERGROUND
INSPECTIONS	607 - SERVICE W/W
INSPECTIONS	604 - ELECTRICAL ROUGH
INSPECTIONS	201 - UNDERGROUND
INSPECTIONS	202 - PARTIAL-MECH
INSPECTIONS	200 - ROUGH-MECH
INSPECTIONS	302 - TEMP TOILET
INSPECTIONS	303 - UNDERGROUND
INSPECTIONS	304 - GROUND ROUGH
INSPECTIONS	305 - TOP OUT
INSPECTIONS	306 - TUB & WATER PIPING
INSPECTIONS	307 - WATER SERVICE
INSPECTIONS	308 - SEWER CONNECTION
INSPECTIONS	320 - LP TANK
INSPECTIONS	701 - FOUNDATION
INSPECTIONS	704 - COMPACTION CERT OR SOIL LETTER
INSPECTIONS	705 - TERMITE TREATMENT
INSPECTIONS	702 - COLUMNS
INSPECTIONS	708 - COLUMN 1ST FLOOR
INSPECTIONS	716 - COLUMNS 2ND FLOOR
INSPECTIONS	707 - SLAB 1 ST FLOOR/ ELEVATION CERTIFICATE
INSPECTIONS	714 - SLAB 2ND FLOOR
INSPECTIONS	710 - REINF MAS/SPECIAL INSP.
INSPECTIONS	711 - TIE BEAM 1 ST FLOOR
INSPECTIONS	712 - POURED CELLS 1ST FLOOR
INSPECTIONS	718 - TIE BEAM 2ND FLOOR
INSPECTIONS	721 - ROOF TRUSSES/BRACING
INSPECTIONS	724 - ROOF FRAMING
INSPECTIONS	726 - PRE-FAB STAIR
INSPECTIONS	722 - ROOF SHEATHING
INSPECTIONS	725 - OTHER SHEATHING

INSPECTIONS	730 - LATHING
INSPECTIONS	727 - FRAMING
INSPECTIONS	728 - FRAMING 2ND FLOOR
INSPECTIONS	723 - WINDOW IN-PROGRESS
INSPECTIONS	729 - INSULATION / CERTIFICATE
INSPECTIONS	719 - DRYWALL
INSPECTIONS	739 - GARAGE DOOR
INSPECTIONS	740 - RAILING
INSPECTIONS	734 - WINDOW FINAL
INSPECTIONS	738 - DOOR FINAL
INSPECTIONS	737 - FINAL SHUTTERS
INSPECTIONS	628 - FINAL ELECTRICAL
INSPECTIONS	216 - FINAL MECHANICAL
INSPECTIONS	327 - FINAL PLUMBING
INSPECTIONS	101 - LANDSCAPING
INSPECTIONS	121 - FINAL ZONING
INSPECTIONS	758 - FINAL STRUCTURAL BUILDING
INSPECTIONS	issueco - CERTIFICATE OF OCCUPANCY/COMPLETION

MIAMI-DADE COUNTY

Building
11805 SW 26th Street
Miami, Florida 33175-2474
786-315-2100

miamidade.gov

NOTICE TO MIAMI-DADE COUNTY BUILDING DEPARTMENT OF EMPLOYMENT AS SPECIAL INSPECTOR UNDER THE FLORIDA BUILDING CODE

I (We) have been retained by / to perform special inspector services under the Florida Building Code at the Mr & Mrs. R Sanchez / Holan Rodriguez 3 project on the below listed structures as of 3-21-16 (date). I am a registered architect or professional engineer licensed in the State of Florida.

Process Numbers: _____ _____

- ☐ Special inspector for piling, FBC 1822.12.0
- ☑ Special inspector for trusses over 35 ft. long or 6 ft high 2319.17.2.4.2
- ☑ Special inspector for reinforced masonry, FBC 2122.4
- ☑ Special inspector for steel connections, FBC 2218.2
- ☑ Special inspector for soil compaction, FBC 1820.3.1
- ☐ Special inspector for precast units & attachments per FBC 1927.12
- ☐ Special inspector for _____

***Note**: Only the marked boxes apply.*

The following individual(s) employed by this firm or me are authorized representatives to perform inspection*

1. LEOPOLDO BELLON
2. _____
3. _____
4. _____

** Special Inspectors utilizing authorized representatives shall insure the authorized representative is qualified by education or licensure to perform the duties assigned by the Special Inspector. The qualifications shall include licensure as a professional engineer or architect; graduation from an engineering education program in civil or structural engineering; graduation from an architectural education program; successful completion of the NCEES Fundamentals Examination; or registration as building inspector or general contractor.*

I, (we) will notify Miami-Dade County Building Department of any changes regarding authorized personnel performing inspection services.

I, (we) understand that a Special Inspector inspection log for each building must be displayed in a convenient location on the site of reference by the Miami-Dade County Building Department Inspector. All mandatory inspections, as required by the Florida Building Code, must be performed by the County. The County building inspections, as required by the Florida Building Code, must be performed by the County. The County building inspections must be called for on all mandatory inspections. *Inspections performed by the Special Inspector hired by the Owner are **in addition** to the mandatory inspections performed by the Department.* Further, upon completion of the work under each Building Permit I will submit to the Building Inspector at the time of final inspection the completed inspection log form and a sealed statement indicating that, to the best of my knowledge, belief and professional judgment those portions of the project outlined above meet the intent of the Florida Building Code and are in substantial accordance with the approved plans.

STATE OF FLORIDA
LEOPOLDO BELLON
AR8737
REGISTERED ARCHITECT

Signed and Sealed

Date: 03-21-16.

Engineer/Architect
Name LEOPOLDO BELLON
(print)

Address 13131 SW 132 St. #104
Miami FL 33186.

Phone No. 305-790-2626.

123_01-121 6/06

STRUCTURAL CALCULATIONS

RESIDENCE LOCATED AT 13940 OLD CUTTLER ROAD PALMETO BAY, FLORIDA.

REVISION 1

PREPARED BY:

JOSE L. GUZMAN P.E.

4869 SW 75TH Ave, Miami, FL 33155

Tel.786.338.1082.

January 23, 2016

JOSE LUIS GUZMAN
LICENSE
No. 56138
STATE OF
FLORIDA
PROFESSIONAL ENGINEER

1/22/16

Jose L. Guzman, P.E.
FL P.E. #56138

CITY OFPALMETTO BAY

January 22, 2016

Review Type: ***Structural***
Revision No. 1

1. .
   Response: Please see revised notes on s-5

2. .
   Response: Please see revised notes on s-5

3. .
   Response: Please see new footing schedule.

4. .
   Response: Please see revised footing schedule.

5. .
   Response: Please see revised roof framing plan

6. .
   Response: See revised roof framing plan

7. .
   Response: Please see attached wind load calculations.

8. .
   Response: Please see attached calculation for hanger.

MecaWind Std v2.2.6.1 per ASCE 7-10

Developed by MECA Enterprises, Inc. Copyright www.mecaenterprises.com

Date	: 1/21/2016	Project No.	: JobNo
Company Name	: True	Designed By	: Engineer
Address	: Address	Description	: Description
City	: City	Customer Name	: Customer
State	: State	Proj Location	: Location

File Location: C:\1-projects\'1-2015\1520-sanchez rodrigues\sanchez.wnd

Input Parameters: Directional Procedure All Heights Building (Ch 27 Part 1)

Basic Wind Speed(V)	=	175.00 mph			
Structural Category	=	II	Exposure Category	=	C
Natural Frequency	=	N/A	Flexible Structure	=	No
Importance Factor	=	1.00	Kd Directional Factor	=	0.85
Alpha	=	9.50	Zg	=	900.00 ft
At	=	0.11	Bt	=	1.00
Am	=	0.15	Bm	=	0.65
Cc	=	0.20	l	=	500.00 ft
Epsilon	=	0.20	Zmin	=	15.00 ft
Slope of Roof	=	6 : 12	Slope of Roof(Theta)	=	26.57 Deg
h: Mean Roof Ht	=	27.75 ft	Type of Roof	=	GABLED
RHt: Ridge Ht	=	34.50 ft	Eht: Eave Height	=	21.00 ft
OH: Roof Overhang at Eave	=	3.00 ft	Overhead Type	=	OH w/ soffit
Bldg Length Along Ridge	=	55.00 ft	Bldg Width Across Ridge	=	48.00 ft

Gust Factor Calculations

Gust Factor Category I Rigid Structures - Simplified Method

Gust1: For Rigid Structures (Nat. Freq.>1 Hz) use 0.85 = 0.85

Gust Factor Category II Rigid Structures - Complete Analysis

Zm:	0.6*Ht	=	16.65 ft
lzm:	Cc*(33/Zm)^0.167	=	0.22
Lzm:	l*(Zm/33)^Epsilon	=	436.06 ft
Q:	(1/(1+0.63*((B+Ht)/Lzm)^0.63))^0.5	=	0.91
Gust2:	0.925*((1+1.7*lzm*3.4*Q)/(1+1.7*3.4*lzm))	=	0.88

Gust Factor Summary

Not a Flexible Structure use the Lessor of Gust1 or Gust2 = 0.85

Table 26.11-1 Internal Pressure Coefficients for Buildings, GCpi

GCPi : Internal Pressure Coefficient = +/-0.18

Wind Pressurs Main Wind Force Resisting System (MWFRS) - Ref Figure 27.4-1

Kh: 2.01*(Ht/Zg)^(2/Alpha)	=	0.97
Kht: Topographic Factor (Figure 6-4)	=	1.00
Qh: .00256*(V)^2*I*Kh*Kht*Kd	=	38.64 psf
Cpww: Windward Wall Cp(Ref Fig 6-6)	=	0.80
Roof Area	=	3320.56 ft^2
Reduction Factor based on Roof Area	=	0.80

MWFRS-Wall Pressures for Wind Normal to 55 ft Wall (Normal to Ridge)

All pressures shown are based upon ASD Design, with a Load Factor of .6

Wall	Cp	Pressure +GCpi (psf)	Pressure -GCpi (psf)
Leeward Wall	-0.50	-23.37	-9.47
Side Walls	-0.70	-29.94	-16.03

Wall	Elev ft	Kz	Kzt	Cp	qz psf	Press +GCpi	Press -GCpi	Total +/-GCpi
Windward	21.00	0.91	1.00	0.80	36.43	17.82	31.73	41.19
Windward	11.00	0.85	1.00	0.80	33.94	16.13	30.03	39.50
Windward	1.00	0.85	1.00	0.80	33.94	16.13	30.03	39.50

Roof Location	Cp	Pressure +GCpi(psf)	Pressure -GCpi(psf)
Windward - Min Cp	-0.30	-16.81	-2.90
Windward - Max Cp	0.18	-1.04	12.87
Leeward Norm to Ridge	-0.60	-26.66	-12.75

Overhang Bottom Side (Windward only)	0.80	24.77	24.77

Notes - Normal to Ridge

Note (1) Per Fig 27.4-1 Note 7, Since Theta > 10 Deg base calcs on Mean Ht
Note (2) Wall & Roof Pressures = Qh*(G*Cp - GCPi)
Note (3) +GCpi = Positive Internal Bldg Press, -GCPi = Negative Internal Bldg Press
Note (4) Total Pressure = Leeward Press + Windward Press (For + or - GCPi)
Note (5) Ref Fig 27.4-1, Normal to Ridge (Theta>=10), Theta= 26.6 Deg, h/l= 0.50
Note (6) Overhang bottom based upon windward wall Cp and GCpi = 0.

MWFRS-Wall Pressures for Wind Normal to 48 ft wall (Along Ridge)

All pressures shown are based upon ASD Design, with a Load Factor of .6

Wall	Cp	Pressure +GCpi (psf)	Pressure -GCpi (psf)
Leeward Wall	-0.47	-22.42	-8.51
Side Walls	-0.70	-29.94	-16.03

Wall	Elev ft	Kz	Kzt	Cp	qz psf	Press +GCpi	Press -GCpi	Total +/-GCpi
Windward	34.50	1.01	1.00	0.80	40.45	20.55	34.46	42.97
Windward	21.00	0.91	1.00	0.80	36.43	17.82	31.73	40.24
Windward	11.00	0.85	1.00	0.80	33.94	16.13	30.03	38.54
Windward	1.00	0.85	1.00	0.80	33.94	16.13	30.03	38.54

Roof - Dist from Windward Edge	Cp	Pressure +GCpi (psf)	Pressure -GCpi (psf)
Roof: 0.0 ft to 13.9 ft	-0.90	-36.55	-22.64
Roof: 13.9 ft to 27.8 ft	-0.90	-36.45	-22.54
Roof: 27.8 ft to 55.0 ft	-0.50	-23.43	-9.53

Notes - Along Ridge

Note (1) Ref Fig 27.4-1, Parallel to Ridge (All), h/l= 0.50

Wind Pressure on Components and Cladding (Ch 30 Part 1)

All pressures shown are based upon ASD Design, with a Load Factor of .6

Width of Pressure Coefficient Zone "a" = = 4.80 ft

Description	Width ft	Span ft	Area ft^2	Zone	Max GCp	Min GCp	Max P psf	Min P psf
truss	2.00	31.00	320.3	1	0.30	-0.80	18.54	-37.86
truss	2.00	31.00	320.3	2	0.30	-1.20	18.54	-53.32
truss	2.00	31.00	320.3	2H	0.30	-2.20	11.59	-85.00
wall20'	1.00	20.00	133.3	4	0.80	-0.90	37.91	-41.78
wall 12	1.00	12.00	48.0	4	0.88	-0.98	40.94	-44.80
wall 12	1.00	12.00	48.0	5	0.88	-1.16	40.94	-51.75
1	2.50	5.00	12.5	4	0.98	-1.08	44.93	-48.79
1	2.50	5.00	12.5	5	0.98	-1.37	44.93	-59.72
2	2.00	5.00	10.0	4	1.00	-1.10	45.59	-49.45
2	2.00	5.00	10.0	5	1.00	-1.40	45.59	-61.04
3	3.00	5.00	15.0	4	0.97	-1.07	44.39	-48.25
3	3.00	5.00	15.0	5	0.97	-1.34	44.39	-58.64
4	2.60	8.00	21.3	4	0.94	-1.04	43.34	-47.21
4	2.60	8.00	21.3	5	0.94	-1.28	43.34	-56.55
5	1.30	8.00	21.3	4	0.94	-1.04	43.34	-47.21
5	1.30	8.00	21.3	5	0.94	-1.28	43.34	-56.55
6	2.67	8.00	21.4	4	0.94	-1.04	43.34	-47.20
6	2.67	8.00	21.4	5	0.94	-1.28	43.34	-56.55
7	3.00	3.00	9.0	4	1.00	-1.10	45.59	-49.45
7	3.00	3.00	9.0	5	1.00	-1.40	45.59	-61.04
8	2.67	6.25	16.7	4	0.96	-1.06	44.07	-47.94
8	2.67	6.25	16.7	5	0.96	-1.32	44.07	-58.01

Khcc:Comp. & Clad. Table 6-3 Case 1 = 0.97
Qhcc:.00256*V^2*Khcc*Kht*Kd = 38.64 psf

1 — 2.5 x 5
2 — 2 x 5
3 — 3 x 5
4 — 2.6 x 8
5 — 1.3 x 8
6 — 2.67 x 8

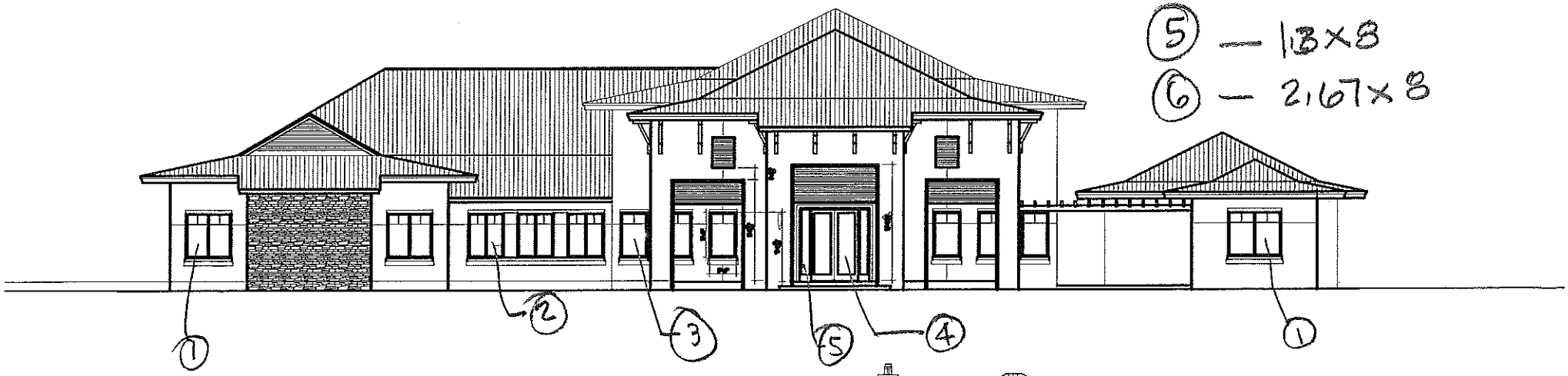

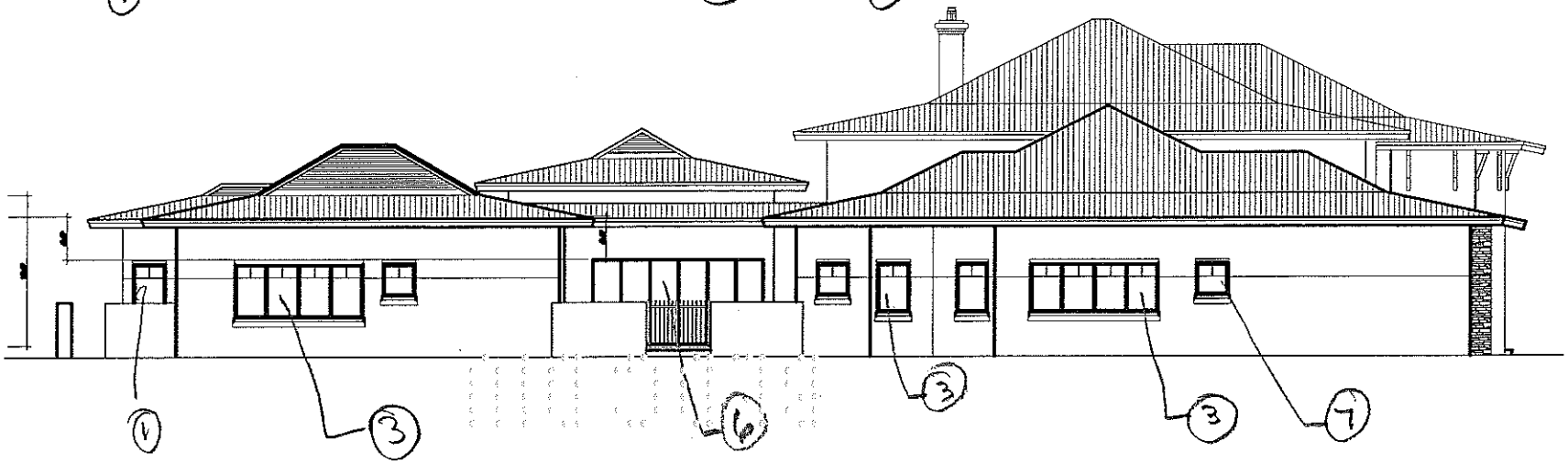

7 3 x 3

(8) 2467 x 6.25

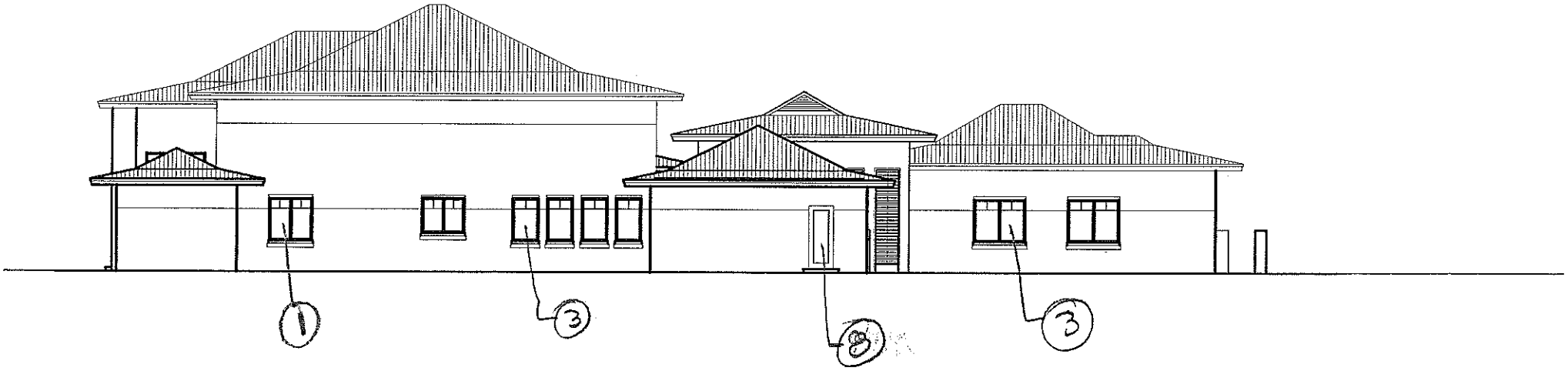

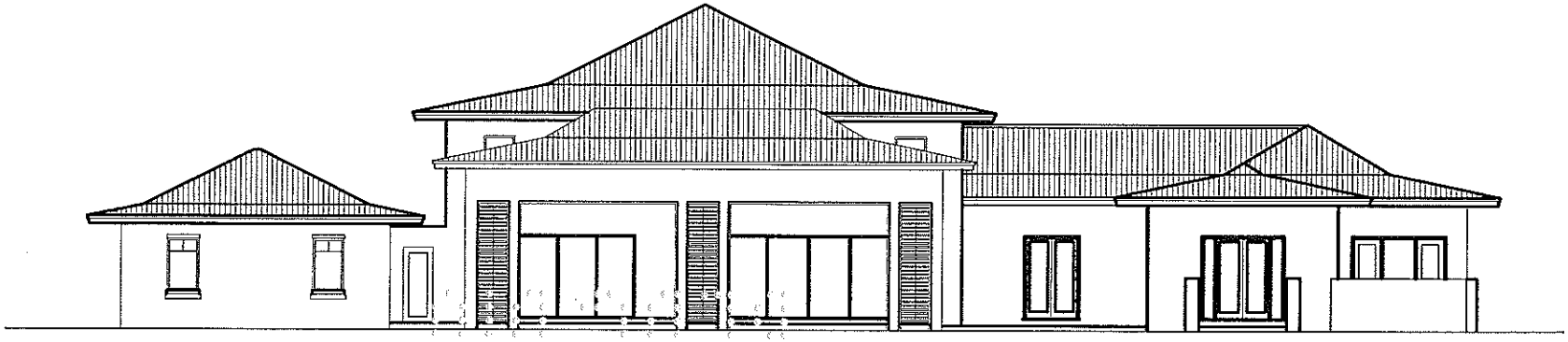

JOSE L. GUZMAN P.E.
4869 SW 75TH AVENUE
MIAMI, FLORIDA
PHONE 786 338 1082

JOB
SHEET NO. OF
CALCULATED BY DATE
CHECKED BY DATE
SCALE

COMMENT # 8

Uplift load = 2040#

load ⊥ 41.78 × 20/2 × 2 = 835

load ∥ = 389

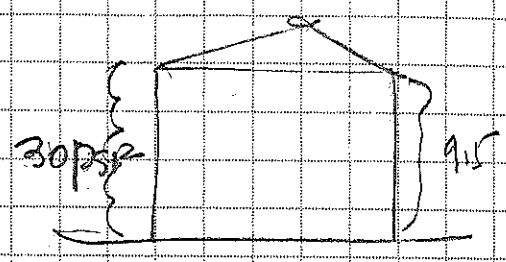

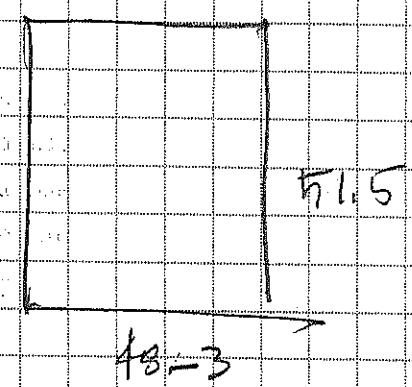

30 + 9.5 = 39.5 psf

39.5 psf × 20/2 = 395 plf

395 plf × 48.25/2 = 9529 #

9529#/5.42 = 1653 × 2 = 371

JOSE L. GUZMAN P.E.
4869 SW 75TH AVENUE
MIAMI, FLORIDA
PHONE 786 338 1082

JOB
SHEET NO. OF
CALCULATED BY DATE
CHECKED BY DATE
SCALE

TRUSS UPLIFT

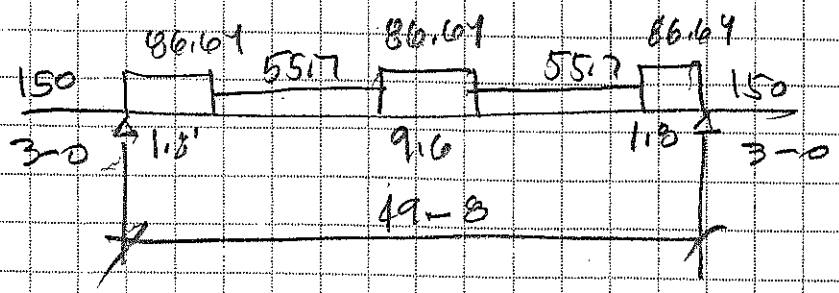

$V = 3 \times 150 + (1.8 + 9.6)\,86.64 + 18.235 \times 55.7$

$V = 2040\#.$

NVHT + NVHC −

$$\frac{2040}{3117+687} + \frac{371}{1575+407} + \frac{835}{2175+308} = 1.06$$

USE CMD EA SIDE

JOSE L. GUZMAN P.E.
4869 SW 75TH AVENUE
MIAMI, FLORIDA
PHONE 786 338 1082

JOB
SHEET NO. OF
CALCULATED BY DATE
CHECKED BY DATE
SCALE

UPLIFT — 2040#

$\perp$ $44.8 \times \frac{12}{2} = 268.8 \times 2 = 538$#.

$\parallel \simeq 0$

$$\frac{2040}{3117} + \frac{538}{2175} + 0 = 0.902 \text{ ok}$$

Nu-Vue INDUSTRIES, Inc.

Manufacturers of Quality Structural & High Velocity Products

WOOD TO CONCRETE

18 Gauge NVHC 43M & NVHC 43-2M Hurricane Clip

		Fastners		Design Loads (lbs)		
Product Code	**Description**	**Masonry Header**	**Joist**	**Uplift**	**L1**	**L2**
NVHC 43	Hurricane Clip - Wide	4- ¼	9-10d	[4]687 per clip	407	308
NVHC 43-2	Hurricane Clip - Wide x2	4- ¼	10-10d	917	547	432

Notes:

1. ¼" Masonry fasteners. 1¼" embedment by IT Buildex Shallconform to Manufacturer's Published information.
2. Masonry Header can be hollow concrete blocks or grouted concrete Blocks or poured concrete beam.

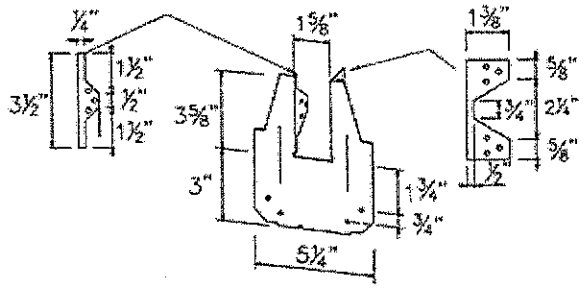

NVHC 43M

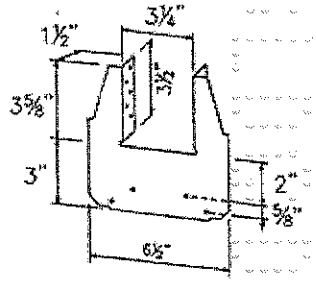

NVHC 43-2M

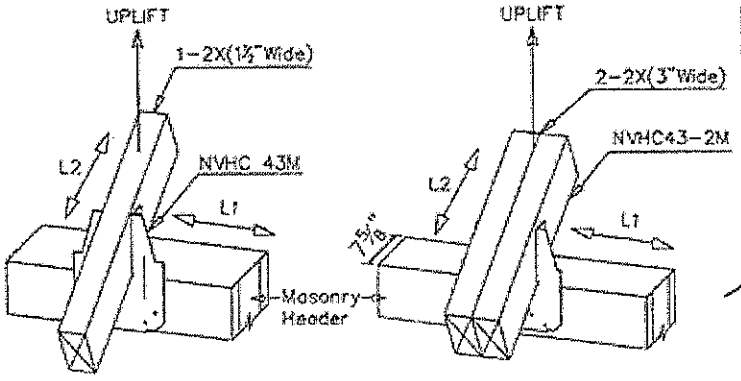

VIPIN N. TOLAT, PE(CIVIL)
FL. REG. # 12847
15123 LANTERN
CREEK LANE
HOUSTON, TX 77068

5/12/10

05-04-2010

FORM R405-2014

FLORIDA ENERGY EFFICIENCY CODE FOR BUILDING CONSTRUCTION

Florida Department of Business and Professional Regulation - Residential Performance Method

Project Name:	A CUSTOM RESIDENCE SANCHEZ - RODRIGUEZ	Builder Name:	
Street:	13940 OLD CUTTLER RD	Permit Office:	PALMETTO BAY
City, State, Zip:	PALMETTO BAY , FL ,	Permit Number:	
Owner:	MR r SANCHEZ AND MRS NOLAN RODRIGUEZ	Jurisdiction:	231000
Design Location:	FL, Miami		

1. New construction or existing	New (From Plans)
2. Single family or multiple family	Single-family
3. Number of units, if multiple family	1
4. Number of Bedrooms	5
5. Is this a worst case?	No
6. Conditioned floor area above grade (ft²)	6676
Conditioned floor area below grade (ft²)	0

7. Windows(1317.0 sqft.)	Description	Area
a. U-Factor:	Sgl, U=1.06	1317.00 ft²
SHGC:	SHGC=0.43	
b. U-Factor:	N/A	ft²
SHGC:		
c. U-Factor:	N/A	ft²
SHGC:		
d. U-Factor:	N/A	ft²
SHGC:		
Area Weighted Average Overhang Depth:		3.134 ft.
Area Weighted Average SHGC:		0.430

8. Floor Types (6676.0 sqft.)	Insulation	Area
a. Slab-On-Grade Edge Insulation	R=0.0	6676.00 ft²
b. N/A	R=	ft²
c. N/A	R=	ft²

9. Wall Types (5934.0 sqft.)	Insulation	Area
a. Concrete Block - Int Insul, Exterior	R=4.1	5934.00 ft²
b. N/A	R=	ft²
c. N/A	R=	ft²
d. N/A	R=	ft²

10. Ceiling Types (6676.0 sqft.)	Insulation	Area
a. Under Attic (Vented)	R=30.0	6676.00 ft²
b. N/A	R=	ft²
c. N/A	R=	ft²

11. Ducts	R	ft²
a. Sup: Attic, Ret: Attic, AH: Master Bedroom	6	140
b. Sup: Attic, Ret: Attic, AH: Family Great	6	380
c. Sup: Attic, Ret: Attic, AH: Bedrooms Area	6	288

12. Cooling systems	kBtu/hr	Efficiency
a. Central Unit	24.0	SEER:18.00
b. Central Unit	51.4	SEER:18.00
c. Central Unit	51.4	SEER:18.00

13. Heating systems	kBtu/hr	Efficiency
a. Electric Strip Heat	17.0	COP:1.00
b. Electric Strip Heat	34.0	COP:1.00
c. Electric Strip Heat	34.0	COP:1.00

14. Hot water systems

a. Electric Tankless — Cap: 1 gallons, EF: 0.970

b. Conservation features

None

15. Credits — Pstat

Glass/Floor Area: 0.197

Total Proposed Modified Loads: 218.85

Total Baseline Loads: 242.09

PASS

I hereby certify that the plans and specifications covered by this calculation are in compliance with the Florida Energy Code.

PREPARED BY: _____

DATE: _____

I hereby certify that this building, as designed, is in compliance with the Florida Energy Code.

OWNER/AGENT: _____

DATE: _____

Review of the plans and specifications covered by this calculation indicates compliance with the Florida Energy Code. Before construction is completed this building will be inspected for compliance with Section 553.908 Florida Statutes.

BUILDING OFFICIAL: _____

DATE: _____

- **Compliance requires certification by the air handler unit manufacturer that the air handler enclosure qualifies as certified factory-sealed in accordance with R403.2.2.1.**
- **Compliance requires an Air Barrier and Insulation Inspection Checklist in accordance with R402.4.1.1 and an envelope leakage test report in accordance with R402.4.1.2.**
- **Compliance with a proposed duct leakage Qn requires a Duct Leakage Test Report confirming duct leakage to outdoors, tested in accordance with Section 803 of RESNET Standards, is not greater than 0.017 Qn for whole house.**

FORM R405-2014

PROJECT

Title:	A CUSTOM RESIDENCE SA	Bedrooms:	5	Address Type:	Street Address
Building Type:	User	Conditioned Area:	6676	Lot #	
Owner:	MR r SANCHEZ AND MRS N	Total Stories:	1	Block/SubDivision:	
# of Units:	1	Worst Case:	No	PlatBook:	
Builder Name:		Rotate Angle:	0	Street:	13940 OLD CUTTLER
Permit Office:	PALMETTO BAY	Cross Ventilation:		County:	DADE
Jurisdiction:	231000	Whole House Fan:		City, State, Zip:	PALMETTO BAY , FL ,
Family Type:	Single-family				
New/Existing:	New (From Plans)				
Comment:					

CLIMATE

√	Design Location	TMY Site	IECC Zone	Design Temp 97.5 %	Design Temp 2.5 %	Int Design Temp Winter	Int Design Temp Summer	Heating Degree Days	Design Moisture	Daily Temp Range
____	FL, Miami	FL_MIAMI_INTL_AP	1	51	90	70	75	149.5	56	Low

BLOCKS

Number	Name	Area	Volume
1	Block1	1190	14280
2	Block2	2878	51804
3	Block3	2608	46944

SPACES

Number	Name	Area	Volume	Kitchen	Occupants	Bedrooms	Infil ID	Finished	Cooled	Heated
1	Master Bedroom	1190	14280	No	2	1	1	Yes	Yes	Yes
2	Family Great	2878	51804	Yes	1	0	1	Yes	Yes	Yes
3	Bedrooms Area	2608	46944	No	4	4	1	Yes	Yes	Yes

FLOORS

√	#	Floor Type	Space	Perimeter	Perimeter R-Value	Area	Joist R-Value	Tile	Wood	Carpet
____	1	Slab-On-Grade Edge Insulatio	Master Bedroom	112 ft	0	1190 ft²	----	0	0	1
____	2	Slab-On-Grade Edge Insulatio	Family Great	176 ft	0	2878 ft²	----	0	0	1
____	3	Slab-On-Grade Edge Insulatio	Bedrooms Area	163 ft	0	2608 ft²	----	0	0	1

ROOF

√	#	Type	Materials	Roof Area	Gable Area	Roof Color	Solar Absor.	SA Tested	Emitt	Emitt Tested	Deck Insul.	Pitch (deg)
____	1	Hip	Metal	7231 ft²	0 ft²	Light	0.6	No	0.9	No	0	22.6

ATTIC

√	#	Type	Ventilation	Vent Ratio (1 in)	Area	RBS	IRCC
____	1	Full attic	Vented	300	6676 ft²	N	N

FORM R405-2014

CEILING

√	#	Ceiling Type	Space	R-Value	Area	Framing Frac	Truss Type
____	1	Under Attic (Vented)	Master Bedroom	30	1190 ft²	0.11	Wood
____	2	Under Attic (Vented)	Family Great	30	2878 ft²	0.11	Wood
____	3	Under Attic (Vented)	Bedrooms Area	30	2608 ft²	0.11	Wood

WALLS

√	#	Ornt	Adjacent To	Wall Type	Space	Cavity R-Value	Width Ft In	Height Ft In	Area	Sheathing R-Value	Framing Fraction	Solar Absor.	Below Grade%
____	1	SE	Exterior	Concrete Block - Int Ins	Bedrooms Ar	4.1	49	12	588.0 ft²		0	0.3	0
____	2	SE	Exterior	Concrete Block - Int Ins	Family Great	4.1	49	18	882.0 ft²		0	0.3	0
____	3	NE	Exterior	Concrete Block - Int Ins	Family Great	4.1	60	18	1080.0 ft²		0	0.3	0
____	4	NE	Exterior	Concrete Block - Int Ins	Bedrooms Ar	4.1	28	12	336.0 ft²		0	0.3	0
____	5	NE	Exterior	Concrete Block - Int Ins	Master Bedro	4.1	40	12	480.0 ft²		0	0.3	0
____	6	NW	Exterior	Concrete Block - Int Ins	Family Great	4.1	64	12	768.0 ft²		0	0.3	0
____	7	NW	Exterior	Concrete Block - Int Ins	Master Bedro	4.1	30	12	360.0 ft²		0	0.3	0
____	8	SW	Exterior	Concrete Block - Int Ins	Master Bedro	4.1	38	12	456.0 ft²		0	0.3	0
____	9	SW	Exterior	Concrete Block - Int Ins	Bedrooms Ar	4.1	82	12	984.0 ft²		0	0.3	0

DOORS

√	#	Ornt	Door Type	Space	Storms	U-Value	Width Ft In	Height Ft In	Area
____	1	SE	Wood	Family Great	None	.46	6	8	48 ft²

WINDOWS

Orientation shown is the entered, Proposed orientation.

√	#	Ornt	Wall ID	Frame	Panes	NFRC	U-Factor	SHGC	Area	Overhang Depth	Overhang Separation	Int Shade	Screening
____	1	SE	1	Metal	Single (Tinted)	Yes	1.06	0.43	60.0 ft²	3 ft 0 in	6 ft 0 in	None	None
____	2	SE	1	Metal	Single (Tinted)	Yes	1.06	0.43	50.0 ft²	3 ft 0 in	8 ft 0 in	None	None
____	3	SE	2	Metal	Single (Tinted)	Yes	1.06	0.43	120.0 ft²	3 ft 0 in	14 ft 0 in	None	None
____	4	SE	2	Metal	Single (Tinted)	Yes	1.06	0.43	16.0 ft²	14 ft 0 in	16 ft 0 in	None	None
____	5	SE	2	Metal	Single (Tinted)	Yes	1.06	0.43	25.0 ft²	3 ft 0 in	16 ft 0 in	None	None
____	6	SE	2	Metal	Single (Tinted)	Yes	1.06	0.43	20.0 ft²	3 ft 0 in	15 ft 0 in	None	None
____	7	SE	2	Metal	Single (Tinted)	Yes	1.06	0.43	60.0 ft²	3 ft 0 in	15 ft 0 in	None	None
____	8	NE	4	Metal	Single (Tinted)	Yes	1.06	0.43	128.0 ft²	3 ft 0 in	11 ft 0 in	None	None
____	9	NE	5	Metal	Single (Tinted)	Yes	1.06	0.43	53.0 ft²	3 ft 0 in	8 ft 0 in	None	None
____	10	NW	6	Metal	Single (Tinted)	Yes	1.06	0.43	112.0 ft²	3 ft 0 in	10 ft 0 in	None	None
____	11	NW	6	Metal	Single (Tinted)	Yes	1.06	0.43	192.0 ft²	3 ft 0 in	10 ft 0 in	None	None
____	12	NW	6	Metal	Single (Tinted)	Yes	1.06	0.43	40.0 ft²	3 ft 0 in	11 ft 0 in	None	None
____	13	NW	7	Metal	Single (Tinted)	Yes	1.06	0.43	64.0 ft²	3 ft 0 in	11 ft 0 in	None	None
____	14	NW	7	Metal	Single (Tinted)	Yes	1.06	0.43	72.0 ft²	3 ft 0 in	11 ft 0 in	None	None
____	15	SW	8	Metal	Single (Tinted)	Yes	1.06	0.43	60.0 ft²	3 ft 0 in	9 ft 0 in	None	None
____	16	SW	8	Metal	Single (Tinted)	Yes	1.06	0.43	9.0 ft²	3 ft 0 in	6 ft 0 in	None	None
____	17	SW	9	Metal	Single (Tinted)	Yes	1.06	0.43	128.0 ft²	3 ft 0 in	11 ft 0 in	None	None
____	18	SW	9	Metal	Single (Tinted)	Yes	1.06	0.43	60.0 ft²	3 ft 0 in	9 ft 0 in	None	None
____	19	SW	9	Metal	Single (Tinted)	Yes	1.06	0.43	18.0 ft²	3 ft 0 in	6 ft 0 in	None	None

WINDOWS

Orientation shown is the entered, Proposed orientation.

√	#	Ornt	Wall ID	Frame	Panes	NFRC	U-Factor	SHGC	Area	Overhang Depth	Overhang Separation	Int Shade	Screening
	20	SW	9	Metal	Single (Tinted)	Yes	1.06	0.43	30.0 ft²	3 ft 0 in	7 ft 0 in	None	None

INFILTRATION

#	Scope	Method	SLA	CFM 50	ELA	EqLA	ACH	ACH 50
1	Wholehouse	Proposed CFM(50)	.000000	5	.27	.52	.0002	.0027

HEATING SYSTEM

√	#	System Type	Subtype	Efficiency	Capacity	Block	Ducts
	1	Electric Strip Heat	None	COP:1	17 kBtu/hr	1	sys#1
	2	Electric Strip Heat	None	COP:1	34 kBtu/hr	2	sys#2
	3	Electric Strip Heat	None	COP:1	34 kBtu/hr	3	sys#3

COOLING SYSTEM

√	#	System Type	Subtype	Efficiency	Capacity	Air Flow	SHR	Block	Ducts
	1	Central Unit	None	SEER: 18	24 kBtu/hr	720 cfm	0.6	1	sys#1
	2	Central Unit	None	SEER: 18	51.4 kBtu/hr	1542 cfm	0.6	2	sys#2
	3	Central Unit	None	SEER: 18	51.4 kBtu/hr	1542 cfm	0.76	3	sys#3

HOT WATER SYSTEM

√	#	System Type	SubType	Location	EF	Cap	Use	SetPnt	Conservation
	1	Electric	Tankless	Family Great	0.97	1 gal	80 gal	120 deg	None

SOLAR HOT WATER SYSTEM

√	FSEC Cert #	Company Name	System Model #	Collector Model #	Collector Area	Storage Volume	FEF
	None	None			ft²		

DUCTS

√	#	Supply Location	Supply R-Value	Supply Area	Return Location	Return Area	Leakage Type	Air Handler	CFM 25 TOT	CFM25 OUT	QN	RLF	HVAC # Heat	HVAC # Coo
	1	Attic	6	140 ft²	Attic	54 ft²	Prop. Leak Free	Master Bed	--- cfm	35.7 cfm	0.03	0.60	1	1
	2	Attic	6	380 ft²	Attic	90 ft²	Default Leakage	Family Gre	(Default)	(Default)			2	2
	3	Attic	6	288 ft²	Attic	80 ft²	Prop. Leak Free	Bedrooms	--- cfm	78.2 cfm	0.03	0.60	3	3

FORM R405-2014

TEMPERATURES

Programable Thermostat: Y

Ceiling Fans:

	Jan	Feb	Mar	Apr	May	Jun	Jul	Aug	Sep	Oct	Nov	Dec
Cooling	[ ]	[ ]	[ ]	[ ]	[ ]	[X]	[X]	[X]	[X]	[ ]	[ ]	[ ]
Heating	[X]	[X]	[X]	[ ]	[ ]	[ ]	[ ]	[ ]	[ ]	[ ]	[X]	[X]
Venting	[ ]	[ ]	[X]	[X]	[ ]	[ ]	[ ]	[ ]	[ ]	[X]	[X]	[ ]

Thermostat Schedule: HERS 2006 Reference

Schedule Type		Hours 1	2	3	4	5	6	7	8	9	10	11	12
Cooling (WD)	AM	78	78	78	78	78	78	78	78	80	80	80	80
	PM	80	80	78	78	78	78	78	78	78	78	78	78
Cooling (WEH)	AM	78	78	78	78	78	78	78	78	78	78	78	78
	PM	78	78	78	78	78	78	78	78	78	78	78	78
Heating (WD)	AM	66	66	66	66	66	68	68	68	68	68	68	68
	PM	68	68	68	68	68	68	68	68	68	68	66	66
Heating (WEH)	AM	66	66	66	66	66	68	68	68	68	68	68	68
	PM	68	68	68	68	68	68	68	68	68	68	66	66

MECHANICAL VENTILATION

Type	Supply CFM	Exhaust CFM	Fan Watts	HRV	Heating System	Run Time	Cooling System
Runtime Vent w/ Min	50	0	0		1 - Electric Strip Heat	%	1 - Central Unit
Runtime Vent w/ Min	50	0	0		2 - Electric Strip Heat	%	2 - Central Unit
Runtime Vent w/ Min	50	0	0		3 - Electric Strip Heat	%	3 - Central Unit

FORM R405-2014

TABLE 402.4.1.1

AIR BARRIER AND INSULATION INSPECTION COMPONENT CRITERIA

Project Name:	A CUSTOM RESIDENCE SANCHEZ - RODRIGUEZ	Builder Name:	
Street:	13940 OLD CUTTLER RD	Permit Office:	PALMETTO BAY
City, State, Zip:	PALMETTO BAY , FL ,	Permit Number:	
Owner:	MR r SANCHEZ AND MRS NOLAN RODRIGUEZ	Jurisdiction:	231000
Design Location:	FL, Miami		

COMPONENT	CRITERIA	CHECK
Air barrier and thermal barrier	A continuous air barrier shall be installed in the building envelope. Exterior thermal envelope contains a continuous barrier. Breaks or joints in the air barrier shall be sealed. Air-permeable insulation shall not be used as a sealing material.	✓
Ceiling/attic	The air barrier in any dropped ceiling/soffit shall be aligned with the insulation and any gaps in the air barrier shall be sealed. Access openings, drop down stairs or knee wall doors to unconditioned attic spaces shall be sealed.	✓
Walls	Corners and headers shall be insulated and the junction of the foundation and sill plate shall be sealed. The junction of the top plate and the top or exterior walls shall be sealed. Exterior thermal envelope insulation for framed walls shall be installed in substantial contact and continuous alignment with the air barrier. Knee walls shall be sealed.	✓
Windows, skylights and doors	The space between window/door jambs and framing and skylights and framing shall be sealed.	✓
Rim joists	Rim joists are insulated and include an air barrier.	—
Floors (including above-garage and cantilevered floors)	Insulation shall be installed to maintain permanent contact with underside of subfloor decking. The air barrier shall be installed at any exposed edge of insulation.	✓
Crawl space walls	Where provided in lieu of floor insulation, insulation shall be permanently attached to the crawlspace walls. Exposed earth in unvented crawl spaces shall be covered with a Class I vapor retarder with overlapping joints taped.	—
Shafts, penetrations	Duct shafts, utility penetrations, and flue shaft openings to exterior or unconditioned space shall be sealed.	✓
Narrow cavities	Batts in narrow cavities shall be cut to fit, or narrow cavities shall be filled by insulation that on installation readily conforms to the available cavity spaces.	✓
Garage separation	Air sealing shall be provided between the garage and conditioned spaces.	✓
Recessed lighting	Recessed light fixtures installed in the building thermal envelope shall be air tight, IC rated, and sealed to the drywall.	✓
Plumbing and wiring	Batt insulation shall be cut neatly to fit around wiring and plumbing in exterior walls, or insulation that on installation readily conforms to available space shall extend behind piping and wiring.	✓
Shower/tub on exterior wall	Exterior walls adjacent to showers and tubs shall be insulated and the air barrier installed separating them from the showers and tubs.	✓
Electrical/phone box on	The air barrier shall be installed behind electrical or communication boxes or air sealed boxes shall be installed.	✓
HVAC register boots	HVAC register boots that penetrate building thermal envelope shall be sealed to the sub-floor or drywall.	✓
Fireplace	An air barrier shall be installed on fireplace walls. Fireplaces shall have gasketed doors	—

FORM R405-2014

ENERGY PERFORMANCE LEVEL (EPL) DISPLAY CARD

ESTIMATED ENERGY PERFORMANCE INDEX* = 90

The lower the EnergyPerformance Index, the more efficient the home.

13940 OLD CUTTLER RD, PALMETTO BAY, FL,

1. New construction or existing		New (From Plans)
2. Single family or multiple family		Single-family
3. Number of units, if multiple family		1
4. Number of Bedrooms		5
5. Is this a worst case?		No
6. Conditioned floor area (ft²)		6676
7. Windows**	Description	Area
a. U-Factor:	Sgl, U=1.06	1317.00 ft²
SHGC:	SHGC=0.43	
b. U-Factor:	N/A	ft²
SHGC:		
c. U-Factor:	N/A	ft²
SHGC:		
d. U-Factor:	N/A	ft²
SHGC:		
Area Weighted Average Overhang Depth:		3.134 ft.
Area Weighted Average SHGC:		0.430

8. Floor Types	Insulation	Area
a. Slab-On-Grade Edge Insulation	R=0.0	6676.00 ft²
b. N/A	R=	ft²
c. N/A	R=	ft²

9. Wall Types	Insulation	Area
a. Concrete Block - Int Insul, Exterior	R=4.1	5934.00 ft²
b. N/A	R=	ft²
c. N/A	R=	ft²
d. N/A	R=	ft²

10. Ceiling Types	Insulation	Area
a. Under Attic (Vented)	R=30.0	5676.00 ft²
b. N/A	R=	ft²
c. N/A	R=	ft²

11. Ducts	R	ft²
a. Sup: Attic, Ret: Attic, AH: Master Bedroom	6	140
b. Sup: Attic, Ret: Attic, AH: Family Great	6	380
c. Sup: Attic, Ret: Attic, AH: Bedrooms Area	6	288

12. Cooling systems	kBtu/hr	Efficiency
a. Central Unit	24.0	SEER:18.00
b. Central Unit	51.4	SEER:18.00
c. Central Unit	51.4	SEER:18.00

13. Heating systems	kBtu/hr	Efficiency
a. Electric Strip Heat	17.0	COP:1.00
b. Electric Strip Heat	34.0	COP:1.00
c. Electric Strip Heat	34.0	COP:1.00

14. Hot water systems

a. Electric — Cap: 1 gallons, EF: 0.97

b. Conservation features

None

15. Credits — Pstat

I certify that this home has complied with the Florida Energy Efficiency Code for Building Construction through the above energy saving features which will be installed (or exceeded) in this home before final inspection. Otherwise, a new EPL Display Card will be completed based on installed Code compliant features.

Builder Signature: _____ Date: 0-22-15

Address of New Home: _____ City/FL Zip: _____

AR8737

*Note: This is not a Building Energy Rating. If your Index is below 70, your home may qualify for energy efficient mortgage (EEM) incentives if you obtain a Florida EnergyGauge Rating. Contact the EnergyGauge Hotline at (321) 638-1492 or see the EnergyGauge web site at energygauge.com for information and a list of certified Raters. For information about the Florida Building Code, Energy Conservation, contact the Florida Building Commission's support staff.

**Label required by Section R303.1.3 of the Florida Building Code, Energy Conservation, if not DEFAULT.

Residential System Sizing Calculation

Summary

MR r SANCHEZ AND MRS NOLAN RODRIGUEZ Project Title:
13940 OLD CUTTLER RD A CUSTOM RESIDENCE SANCHEZ - RODRIGUEZ
PALMETTO BAY, FL

10/21/2015

Location for weather data: Miami, FL - Defaults: Latitude(25.82) Altitude(7 ft.) Temp Range(L)
Humidity data: Interior RH (50%) Outdoor wet bulb (77F) Humidity difference(56gr.)

Winter design temperature(TMY3 99%)	49	F	Summer design temperature(TMY3 99%)	92	F
Winter setpoint	70	F	Summer setpoint	75	F
Winter temperature difference	21	F	Summer temperature difference	17	F
Total heating load calculation	**71546**	**Btuh**	**Total cooling load calculation**	**123095**	**Btuh**
Submitted heating capacity	% of calc	Btuh	Submitted cooling capacity	% of calc	Btuh
Total (Electric Strip Heat)	118.8	85000	Sensible (SHR = 0.66)	79.6	84304
			Latent	247.5	42496
			Total	103.0	126800

WINTER CALCULATIONS

Winter Heating Load (for 6676 sqft)

Load component			Load	
Window total	1317	sqft	29316	Btuh
Wall total	4569	sqft	14319	Btuh
Door total	48	sqft	464	Btuh
Ceiling total	6676	sqft	4465	Btuh
Floor total	See detail report		11176	Btuh
Infiltration	0	cfm	0	Btuh
Duct loss			8342	Btuh
Subtotal			**68082**	**Btuh**
Ventilation	150	cfm	3464	Btuh
TOTAL HEAT LOSS			**71546**	**Btuh**

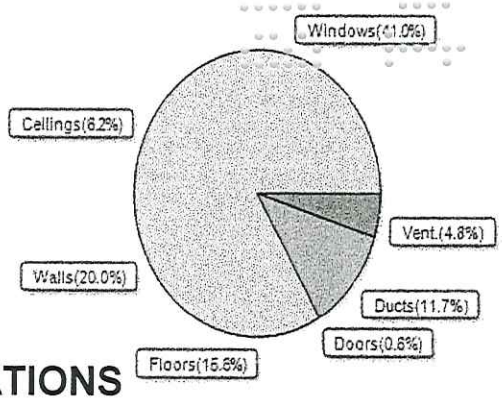

SUMMER CALCULATIONS

Summer Cooling Load (for 6676 sqft)

Load component			Load	
Window total	1317	sqft	62947	Btuh
Wall total	4569	sqft	11591	Btuh
Door total	48	sqft	707	Btuh
Ceiling total	6676	sqft	9780	Btuh
Floor total			0	Btuh
Infiltration	0	cfm	0	Btuh
Internal gain			9210	Btuh
Duct gain			8884	Btuh
Sens. Ventilation	150	cfm	2804	Btuh
Blower Load			0	Btuh
Total sensible gain			**105923**	**Btuh**
Latent gain(ducts)			2461	Btuh
Latent gain(infiltration)			0	Btuh
Latent gain(ventilation)			5711	Btuh
Latent gain(internal/occupants/other)			9000	Btuh
Total latent gain			**17171**	**Btuh**
TOTAL HEAT GAIN			**123095**	**Btuh**

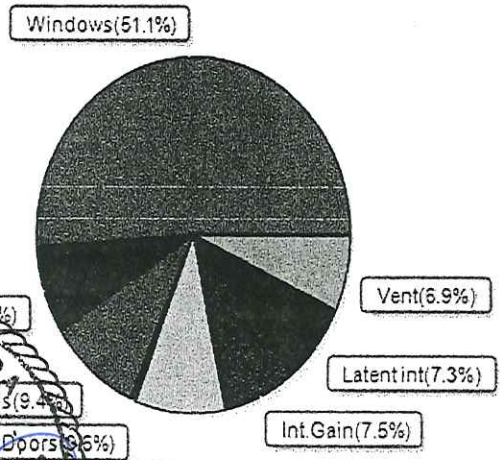

STATE OF FLORIDA
LEOPOLDO BE
AR8737
REGISTERED ARCHITECT

8th Edition

EnergyGauge® System Sizing
PREPARED BY:
DATE: 10 22 15

System Sizing Calculations - Winter

Residential Load - Room by Room Component Details

MR r SANCHEZ AND MRS NOLAN RODRIGUEZ
13940 OLD CUTTLER RD
PALMETTO BAY, FL

Project Title:
A CUSTOM RESIDENCE SANCHEZ - RODRIGUEZ
Building Type: User

10/21/2015

Reference City: Miami, FL (Defaults) Winter Temperature Difference: 21.0 F (TMY3 99%)

Component Loads for Room #1: Master Bedroom

Window	Panes/Type	Frame	U	Orientation	Area(sqft) X	HTM=	Load
9	1, NFRC 0.43	Metal	1.06	NE	53.0	22.3	1180 Btuh
13	1, NFRC 0.43	Metal	1.06	NW	64.0	22.3	1425 Btuh
14	1, NFRC 0.43	Metal	1.06	NW	72.0	22.3	1603 Btuh
15	1, NFRC 0.43	Metal	1.06	SW	60.0	22.3	1336 Btuh
16	1, NFRC 0.43	Metal	1.06	SW	9.0	22.3	200 Btuh
	Window Total				258.0(sqft)		5743 Btuh

Walls	Type	Ornt.	Ueff.	R-Value (Cav/Sh)	Area X	HTM=	Load
5	Conc Blk,Hollow	- Ext	(0.149)	4.1/0.0	427	3.13	1336 Btuh
7	Conc Blk,Hollow	- Ext	(0.149)	4.1/0.0	224	3.13	702 Btuh
8	Conc Blk,Hollow	- Ext	(0.149)	4.1/0.0	387	3.13	1213 Btuh
	Wall Total				1038(sqft)		3253 Btuh

Ceilings	Type/Color/Surface	Ueff.	R-Value	Area X	HTM=	Load
1	Vented Attic/L/Metal	(0.032)	30.0/0.0	1190	0.7	796 Btuh
	Ceiling Total			1190(sqft)		796Btuh

Floors	Type	Ueff.	R-Value	Size X	HTM=	Load
1	Slab On Grade	(1.180)	0.0	112.0 ft(perim.)	24.8	2775 Btuh
	Floor Total			1190 sqft		2775 Btuh

	Room Envelope Subtotal:	12567 Btuh

Infiltration	Type	Wholehouse ACH	Room Volume	Wall Ratio	CFM=	
	Natural(Adjusted for ventilation)	0.00	14280	0.23	0.0	0 Btuh

Duct load	Extremely sealed, Supply(R6.0-Attic), Return(R6.0-Attic) (DLM of 0.096)	1211 Btuh
Room #1	**Sensible Room Subtotal**	**13778 Btuh**

Manual J Winter Calculations

Residential Load - Component Details (continued)

MR r SANCHEZ AND MRS NOLAN RODRIGUEZ Project Title:
13940 OLD CUTTLER RD A CUSTOM RESIDENCE SANCHEZ - RODRIGUEZ
PALMETTO BAY, FL Building Type: User

10/21/2015

Component Loads for Room #2: Family Great

Window	Panes/Type	Frame	U	Orientation	Area(sqft) X	HTM=	Load
3	1, NFRC 0.43	Metal	1.06	SE	120.0	22.3	2671 Btuh
4	1, NFRC 0.43	Metal	1.06	SE	16.0	22.3	356 Btuh
5	1, NFRC 0.43	Metal	1.06	SE	25.0	22.3	556 Btuh
6	1, NFRC 0.43	Metal	1.06	SE	20.0	22.3	445 Btuh
7	1, NFRC 0.43	Metal	1.06	SE	60.0	22.3	1336 Btuh
10	1, NFRC 0.43	Metal	1.06	NW	112.0	22.3	2493 Btuh
11	1, NFRC 0.43	Metal	1.06	NW	192.0	22.3	4274 Btuh
12	1, NFRC 0.43	Metal	1.06	NW	40.0	22.3	890 Btuh
	Window Total				585.0(sqft)		13022 Btuh

Walls	Type	Ornt.	Ueff.	R-Value (Cav/Sh)	Area X	HTM=	Load
2	Conc Blk,Hollow	- Ext	(0.149)	4.1/0.0	593	3.13	1858 Btuh
3	Conc Blk,Hollow	- Ext	(0.149)	4.1/0.0	1080	3.13	3385 Btuh
6	Conc Blk,Hollow	- Ext	(0.149)	4.1/0.0	424	3.13	1329 Btuh
	Wall Total				2097(sqft)		6572 Btuh

Doors	Type	Storm	Ueff.	Area X	HTM=	Load
1	Wood - Exterior,	n	(0.460)	48	9.7	464 Btuh
	Door Total			48(sqft)		464Btuh

Ceilings	Type/Color/Surface	Ueff.	R-Value	Area X	HTM=	Load
2	Vented Attic/L/Metal	(0.032)	30.0/0.0	2878	0.7	1925 Btuh
	Ceiling Total			2878(sqft)		1925Btuh

Floors	Type	Ueff.	R-Value	Size X	HTM=	Load
2	Slab On Grade	(1.180)	0.0	176.0 ft(perim.)	24.8	4361 Btuh
	Floor Total			2878 sqft		4361 Btuh

	Room Envelope Subtotal:					26344 Btuh

Infiltration	Type	Wholehouse ACH	Room Volume	Wall Ratio	CFM=	
	Natural(Adjusted for ventilation)	0.00	51804	0.46	0.0	0 Btuh

Duct load	Average sealed, Supply(R6.0-Attic), Return(R6.0-Attic)	(DLM of 0.175)	4601 Btuh
Room #2	**Sensible Room Subtotal**		**30945 Btuh**

Manual J Winter Calculations

Residential Load - Component Details (continued)

MR r SANCHEZ AND MRS NOLAN RODRIGUEZ Project Title:
13940 OLD CUTTLER RD A CUSTOM RESIDENCE SANCHEZ - RODRIGUEZ
PALMETTO BAY, FL Building Type: User

10/21/2015

Component Loads for Room #3: Bedrooms Area

Window	Panes/Type	Frame	U	Orientation	Area(sqft) X	HTM=	Load
1	1, NFRC 0.43	Metal	1.06	SE	60.0	22.3	1336 Btuh
2	1, NFRC 0.43	Metal	1.06	SE	50.0	22.3	1113 Btuh
8	1, NFRC 0.43	Metal	1.06	NE	128.0	22.3	2849 Btuh
17	1, NFRC 0.43	Metal	1.06	SW	128.0	22.3	2849 Btuh
18	1, NFRC 0.43	Metal	1.06	SW	60.0	22.3	1336 Btuh
19	1, NFRC 0.43	Metal	1.06	SW	18.0	22.3	401 Btuh
20	1, NFRC 0.43	Metal	1.06	SW	30.0	22.3	668 Btuh
	Window Total				474.0(sqft)		10551 Btuh

Walls	Type	Ornt.	Ueff.	R-Value (Cav/Sh)	Area X	HTM=	Load
1	Conc Blk,Hollow	- Ext	(0.149)	4.1/0.0	478	3.13	1498 Btuh
4	Conc Blk,Hollow	- Ext	(0.149)	4.1/0.0	208	3.13	652 Btuh
9	Conc Blk,Hollow	- Ext	(0.149)	4.1/0.0	748	3.13	2344 Btuh
	Wall Total				1434(sqft)		4494 Btuh

Ceilings	Type/Color/Surface	Ueff.	R-Value	Area X	HTM=	Load
3	Vented Attic/L/Metal	(0.032)	30.0/0.0	2608	0.7	1744 Btuh
	Ceiling Total			2608(sqft)		1744Btuh

Floors	Type	Ueff.	R-Value	Size X	HTM=	Load
3	Slab On Grade	(1.180)	0.0	163.0 ft(perim.)	24.8	4039 Btuh
	Floor Total			2608 sqft		4039 Btuh

	Room Envelope Subtotal:	20829 Btuh

Infiltration	Type	Wholehouse ACH	Room Volume	Wall Ratio	CFM=	
	Natural(Adjusted for ventilation)	0.00	46944	0.31	0.0	0 Btuh

Duct load	Extremely sealed, Supply(R6.0-Attic), Return(R6.0-Attic) (DLM of 0.121)	2530 Btuh
Room #3	**Sensible Room Subtotal**	**23358 Btuh**

SYSTEM GROUPS (BLOCK LOADS)

Heating Loads For System(s):1 Serving Rooms: 1	Block load	13778 Btuh

Manual J Winter Calculations

Residential Load - Component Details (continued)

MR r SANCHEZ AND MRS NOLAN RODRIGUEZ Project Title:
13940 OLD CUTTLER RD A CUSTOM RESIDENCE SANCHEZ - RODRIGUEZ
PALMETTO BAY, FL Building Type: User

10/21/2015

Heating Loads For System(s):2 Serving Rooms: 2	Block load	30945 Btuh

Heating Loads For System(s):3 Serving Rooms: 3	Block load	23358 Btuh

WHOLE HOUSE TOTALS

Totals for Heating	Subtotal Sensible Heat Loss Ventilation Sensible Heat Loss Total Heat Loss	68082 Btuh 3464 Btuh 71546 Btuh

EQUIPMENT

1. Electric Strip Heat 2. Electric Strip Heat 3. Electric Strip Heat		17000 Btuh 34000 Btuh 34000 Btuh

Key: Window types - NFRC (Requires U-Factor and Shading coefficient(SHGC) of glass as numerical values)
or - Glass as 'Clear' or 'Tint' (Uses U-Factor and SHGC defaults)
U - (Window U-Factor)
HTM - (ManualJ Heat Transfer Multiplier)

Version 8

System Sizing Calculations - Summer

Residential Load - Room by Room Component Details

MR r SANCHEZ AND MRS NOLAN RODRIGUEZ Project Title:
13940 OLD CUTTLER RD A CUSTOM RESIDENCE SANCHEZ - RODRIGUEZ
PALMETTO BAY, FL

10/21/2015

Reference City: Miami, FL Temperature Difference: 17.0F(TMY3 99%) Humidity difference: 56gr.

Component Loads for Room #1: Master Bedroom

Window	Type* Panes	SHGC	U	InSh	IS	Ornt	Overhang Len	Hgt	Window Area(sqft) Gross	Shaded	Unshaded	HTM Shaded	Unshaded	Load
9	1 NFRC	0.43,	1.06	No	No	NE	3.0ft	8.0ft	53.0	0.0	53.0	27	48	2529 Btuh
13	1 NFRC	0.43,	1.06	No	No	NW	3.0ft	11.0f	64.0	0.0	64.0	27	48	3054 Btuh
14	1 NFRC	0.43,	1.06	No	No	NW	3.0ft	11.0f	72.0	0.0	72.0	27	48	3435 Btuh
15	1 NFRC	0.43,	1.06	No	No	SW	3.0ft	9.0ft	60.0	0.0	60.0	27	48	2370 Btuh
16	1 NFRC	0.43,	1.06	No	No	SW	3.0ft	6.0ft	9.0	0.0	9.0	27	48	431 Btuh
	Window Total								258 (sqft)					12321 Btuh

Walls	Type	U-Value	R-Value Cav/Sheath	Area(sqft)	HTM	Load
5	Concrete Blk,Hollow - Ext	0.15	4.1/0.0	427.0	2.5	1083 Btuh
7	Concrete Blk,Hollow - Ext	0.15	4.1/0.0	224.0	2.5	568 Btuh
8	Concrete Blk,Hollow - Ext	0.15	4.1/0.0	387.0	2.5	982 Btuh
	Wall Total			1038 (sqft)		2633 Btuh

Ceilings	Type/Color/Surface	U-Value	R-Value	Area(sqft)	HTM	Load
1	Vented Attic/Light/Metal	0.032	30.0/0.0	1190.0	1.46	1743 Btuh
	Ceiling Total			1190 (sqft)		1743 Btuh

Floors	Type	R-Value	Size	HTM	Load
1	Slab On Grade	0.0	1190 (ft-perimeter)	0.0	0 Btuh
	Floor Total		1190.0 (sqft)		0 Btuh

	Zone Envelope Subtotal:	16698 Btuh

Infiltration	Type	Wholehouse ACH	Volume(cuft)	Wall Ratio	CFM=	Load
	Natural(Adjusted for ventilation)	0.00	14280	0.23	0.0	0 Btuh

Internal gain	Occupants	Btuh/occupant		Appliance	Load
	2	X 230	+	0	460 Btuh

	Sensible Envelope Load:	17158 Btuh
Duct load	Extremely sealed, Supply(R6.0-Attic), Return(R6.0-Attic) (DGM of 0.084)	1441 Btuh
	Sensible Zone Load	**18599 Btuh**

Manual J Summer Calculations

Residential Load - Component Details (continued)

MR r SANCHEZ AND MRS NOLAN RODRIGUEZ Project Title: Climate:FL_MIAMI_INTL_AP
13940 OLD CUTTLER RD A CUSTOM RESIDENCE SANCHEZ - RODRIGUEZ
PALMETTO BAY, FL

10/21/2015

Component Loads for Room #2: Family Great

Window	Type* Panes	SHGC	U	InSh	IS	Ornt	Overhang Len	Hgt	Window Area(sqft) Gross	Shaded	Unshaded	HTM Shaded	Unshaded	Load
3	1 NFRC	0.43,	1.06	No	No	SE	3.0ft	14.0f	120.0	0.0	120.0	27	48	5746 Btuh
4	1 NFRC	0.43,	1.06	No	No	SE	14.0f	16.0f	16.0	16.0	0.0	27	48	438 Btuh
5	1 NFRC	0.43,	1.06	No	No	SE	3.0ft	16.0f	25.0	0.0	25.0	27	48	1197 Btuh
6	1 NFRC	0.43,	1.06	No	No	SE	3.0ft	15.0f	20.0	0.0	20.0	27	48	956 Btuh
7	1 NFRC	0.43,	1.06	No	No	SE	3.0ft	15.0f	60.0	0.0	60.0	27	48	2873 Btuh
10	1 NFRC	0.43,	1.06	No	No	NW	3.0ft	10.0f	112.0	0.0	112.0	27	48	5344 Btuh
11	1 NFRC	0.43,	1.06	No	No	NW	3.0ft	10.0f	192.0	0.0	192.0	27	48	9161 Btuh
12	1 NFRC	0.43,	1.06	No	No	NW	3.0ft	11.0f	40.0	0.0	40.0	27	48	1908 Btuh
	Window Total								585 (sqft)					27623 Btuh

Walls	Type	U-Value	R-Value Cav/Sheath	Area(sqft)	HTM	Load
2	Concrete Blk,Hollow - Ext	0.15	4.1/0.0	593.0	2.5	1504 Btuh
3	Concrete Blk,Hollow - Ext	0.15	4.1/0.0	1080.0	2.5	2740 Btuh
6	Concrete Blk,Hollow - Ext	0.15	4.1/0.0	424.0	2.5	1076 Btuh
	Wall Total			2097 (sqft)		5320 Btuh

Doors	Type	Area (sqft)	HTM	Load
1	Wood - Exterior	48.0	14.7	707 Btuh
	Door Total	48 (sqft)		707 Btuh

Ceilings	Type/Color/Surface	U-Value	R-Value	Area(sqft)	HTM	Load
2	Vented Attic/Light/Metal	0.032	30.0/0.0	2878.0	1.46	4216 Btuh
	Ceiling Total			2878 (sqft)		4216 Btuh

Floors	Type	R-Value	Size	HTM	Load
2	Slab On Grade	0.0	2878 (ft-perimeter)	0.0	0 Btuh
	Floor Total		2878.0 (sqft)		0 Btuh
			Zone Envelope Subtotal:		37866 Btuh

Infiltration	Type	Wholehouse ACH	Volume(cuft)	Wall Ratio	CFM=	Load
	Natural(Adjusted for ventilation)	0.00	51804	0.46	0.0	0 Btuh

Internal gain	Occupants		Btuh/occupant		Appliance	Load
	1	X	230	+	2200	2430 Btuh
			Sensible Envelope Load:			40296 Btuh
Duct load	Average sealed, Supply(R6.0-Attic), Return(R6.0-Attic)				(DGM of 0.115)	4643 Btuh
					Sensible Zone Load	**44939 Btuh**

Manual J Summer Calculations

Residential Load - Component Details (continued)

MR r SANCHEZ AND MRS NOLAN RODRIGUEZ Project Title: Climate:FL_MIAMI_INTL_AP
13940 OLD CUTTLER RD A CUSTOM RESIDENCE SANCHEZ - RODRIGUEZ
PALMETTO BAY, FL

10/21/2015

Component Loads for Room #3: Bedrooms Area

Window	Type* Panes	SHGC	U	InSh	IS	Ornt	Overhang Len	Hgt	Window Area(sqft) Gross	Shaded	Unshaded	HTM Shaded	Unshaded	Load
1	1 NFRC	0.43,	1.06	No	No	SE	3.0ft	6.0ft	60.0	0.0	60.0	27	48	2873 Btuh
2	1 NFRC	0.43,	1.06	No	No	SE	3.0ft	8.0ft	50.0	0.0	50.0	27	48	2394 Btuh
8	1 NFRC	0.43,	1.06	No	No	NE	3.0ft	11.0f	128.0	0.0	128.0	27	48	6107 Btuh
17	1 NFRC	0.43,	1.06	No	No	SW	3.0ft	11.0f	128.0	0.0	128.0	27	48	6129 Btuh
18	1 NFRC	0.43,	1.06	No	No	SW	3.0ft	9.0ft	60.0	0.0	60.0	27	48	2873 Btuh
19	1 NFRC	0.43,	1.06	No	No	SW	3.0ft	6.0ft	18.0	0.0	18.0	27	48	862 Btuh
20	1 NFRC	0.43,	1.06	No	No	SW	3.0ft	7.0ft	30.0	0.0	30.0	27	48	1436 Btuh
	Window Total								474 (sqft)					22674 Btuh

Walls	Type	U-Value	R-Value Cav/Sheath	Area(sqft)	HTM	Load
1	Concrete Blk,Hollow - Ext	0.15	4.1/0.0	478.0	2.5	1213 Btuh
4	Concrete Blk,Hollow - Ext	0.15	4.1/0.0	208.0	2.5	528 Btuh
9	Concrete Blk,Hollow - Ext	0.15	4.1/0.0	748.0	2.5	1898 Btuh
	Wall Total			1434 (sqft)		3638 Btuh

Ceilings	Type/Color/Surface	U-Value	R-Value	Area(sqft)	HTM	Load
3	Vented Attic/Light/Metal	0.032	30.0/0.0	2608.0	1.46	3821 Btuh
	Ceiling Total			2608 (sqft)		3821 Btuh

Floors	Type	R-Value	Size	HTM	Load
3	Slab On Grade	0.0	2608 (ft-perimeter)	0.0	0 Btuh
	Floor Total		2608.0 (sqft)		0 Btuh

	Zone Envelope Subtotal:	30132 Btuh

Infiltration	Type	Wholehouse ACH	Volume(cuft)	Wall Ratio	CFM=	Load
	Natural(Adjusted for ventilation)	0.00	46944	0.31	0.0	0 Btuh

Internal gain	Occupants		Btuh/occupant		Appliance	Load
	4	X	230	+	5400	6320 Btuh

	Sensible Envelope Load:	36452 Btuh
Duct load	Extremely sealed, Supply(R6.0-Attic), Return(R6.0-Attic) (DGM of 0.076)	2772 Btuh
	Sensible Zone Load	**39225 Btuh**

The following window Excursion will be assigned to the system loads.

Windows		
	July excursion for System 1	329 Btuh
	July excursion for System 2	0 Btuh
	July excursion for System 3	0 Btuh
	Excursion Subtotal:	329 Btuh

Manual J Summer Calculations

Residential Load - Component Details (continued)

MR r SANCHEZ AND MRS NOLAN RODRIGUEZ Project Title: Climate:FL_MIAMI_INTL_AP
13940 OLD CUTTLER RD A CUSTOM RESIDENCE SANCHEZ - RODRIGUEZ
PALMETTO BAY, FL

10/21/2015

Duct load		28 Btuh
	Sensible Excursion Load	**356 Btuh**

Manual J Summer Calculations

Residential Load - Component Details (continued)

MR r SANCHEZ AND MRS NOLAN RODRIGUEZ Project Title: Climate:FL_MIAMI_INTL_AP
13940 OLD CUTTLER RD A CUSTOM RESIDENCE SANCHEZ - RODRIGUEZ
PALMETTO BAY, FL

10/21/2015

SYSTEM GROUPS (BLOCK LOADS)

	Sensible Envelope Load	**17153 Btuh**
	Window Excursion	329 Btuh
Cooling Loads	Sensible Duct Load (duct gain multiplier of 0.084) (Includes 28 Btuh due to window excursion)	1469 Btuh
	Sensible ventilation	935 Btuh
For System(s):	**Zone Sensible gain**	**19890 Btuh**
1	Latent infiltration/ventilation gain	1904 Btuh
Serving Zones:	Latent duct gain	289 Btuh
1	Latent occupant gain	400 Btuh
	Latent other gain	0 Btuh
	Total block load	**22482 Btuh**

	Sensible Envelope Load	**40296 Btuh**
	Window Excursion	0 Btuh
Cooling Loads	Sensible Duct Load (duct gain multiplier of 0.115)	4643 Btuh
	Sensible ventilation	935 Btuh
For System(s):	**Zone Sensible gain**	**45874 Btuh**
2	Latent infiltration/ventilation gain	1904 Btuh
Serving Zones:	Latent duct gain	1584 Btuh
2	Latent occupant gain	200 Btuh
	Latent other gain	2200 Btuh
	Total block load	**51761 Btuh**

Manual J Summer Calculations

Residential Load - Component Details (continued)

MR r SANCHEZ AND MRS NOLAN RODRIGUEZ Project Title: Climate:FL_MIAMI_INTL_AP
13940 OLD CUTTLER RD A CUSTOM RESIDENCE SANCHEZ - RODRIGUEZ
PALMETTO BAY, FL

10/21/2015

SYSTEM GROUPS (BLOCK LOADS)

	Sensible Envelope Load	**36452 Btuh**
	Window Excursion	0 Btuh
Cooling Loads	Sensible Duct Load (duct gain multiplier of 0.076)	2772 Btuh
	Sensible ventilation	935 Btuh
For System(s):	**Zone Sensible gain**	**40160 Btuh**
3	Latent infiltration/ventilation gain	1904 Btuh
Serving Zones:	Latent duct gain	588 Btuh
3	Latent occupant gain	800 Btuh
	Latent other gain	5400 Btuh
	Total block load	**48852 Btuh**

WHOLE HOUSE TOTALS

	Sensible Envelope Load All Zones	**94235 Btuh**
	Sensible Duct Load	8884 Btuh
	Total Sensible Zone Loads	**103119 Btuh**
	Sensible ventilation	2804 Btuh
	Blower	0 Btuh
Whole House	**Total sensible gain**	**105923 Btuh**
Totals for Cooling	Latent infiltration gain (for 56 gr. humidity difference)	0 Btuh
	Latent ventilation gain	5711 Btuh
	Latent duct gain	2461 Btuh
	Latent occupant gain (7.0 people @ 200 Btuh per person)	1400 Btuh
	Latent other gain	7600 Btuh
	Latent total gain	**17171 Btuh**
	TOTAL GAIN	**123095 Btuh**

EQUIPMENT

1. Central Unit	#	24000 Btuh
2. Central Unit	#	51400 Btuh
3. Central Unit	#	51400 Btuh

STRUCTURAL CALCULATIONS

RESIDENCE LOCATED AT 13940 OLD CUTTLER ROAD PALMETO BAY, FLORIDA.

PREPARED BY:

JOSE L. GUZMAN P.E.
4869 SW 75TH Ave, Miami, FL 33155
Tel.786.338.1082.

October 23, 2015

STATE OF FLORIDA
PROFESSIONAL ENGINEER
JOSE LUIS GUZMAN
LICENSE
56138
10/23/15
Jose L. Guzman, P.E.
FL P.E. #56138

HURRICANE STRAP SCHEDULE

CONNECTION TYPE	SIMPSON/NUMBER	UPLIFT/DOWN	NAIL SIZE QUANTITY SEAT PLATE	NAIL SIZE QUANTITY	NO. APPROVALS
A	HU-VUE/NVTA-18	122 #	(6) 16d X 1 1/2	(8) 16d	[illegible]
B	HU-VUE/NVTH-18	347#	(6) 16d X 1 1/2	(10) 16d X 1 1/2	[illegible]
C	SIMPSON PSTR	3000 #	2 (1/2" X 8 TITAN HD)	16 SDS 1/4" X 3"	PL-3473
D	SIMPSON PSTR	4400 #	4 (1/2" X 8 TITAN HD)	16 SDS 1/4" X 3"	PL-3473
E	SEE DET. A	11000#			

POINT LOAD = 300 LBS
AT BOTT. CHORD PANEL POINT
TRUSSES TOP AND BOTT. CORD 6"

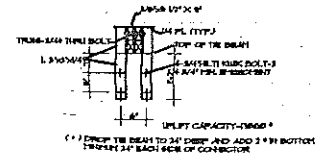

(*) DROP TIE BEAM TO 24" DEEP AND ADD 2 # IN BOTTOM TENSION 24" EACH SIDE OF CONNECTOR

DETAIL A
SCALE: 3/4" = 1'-0"

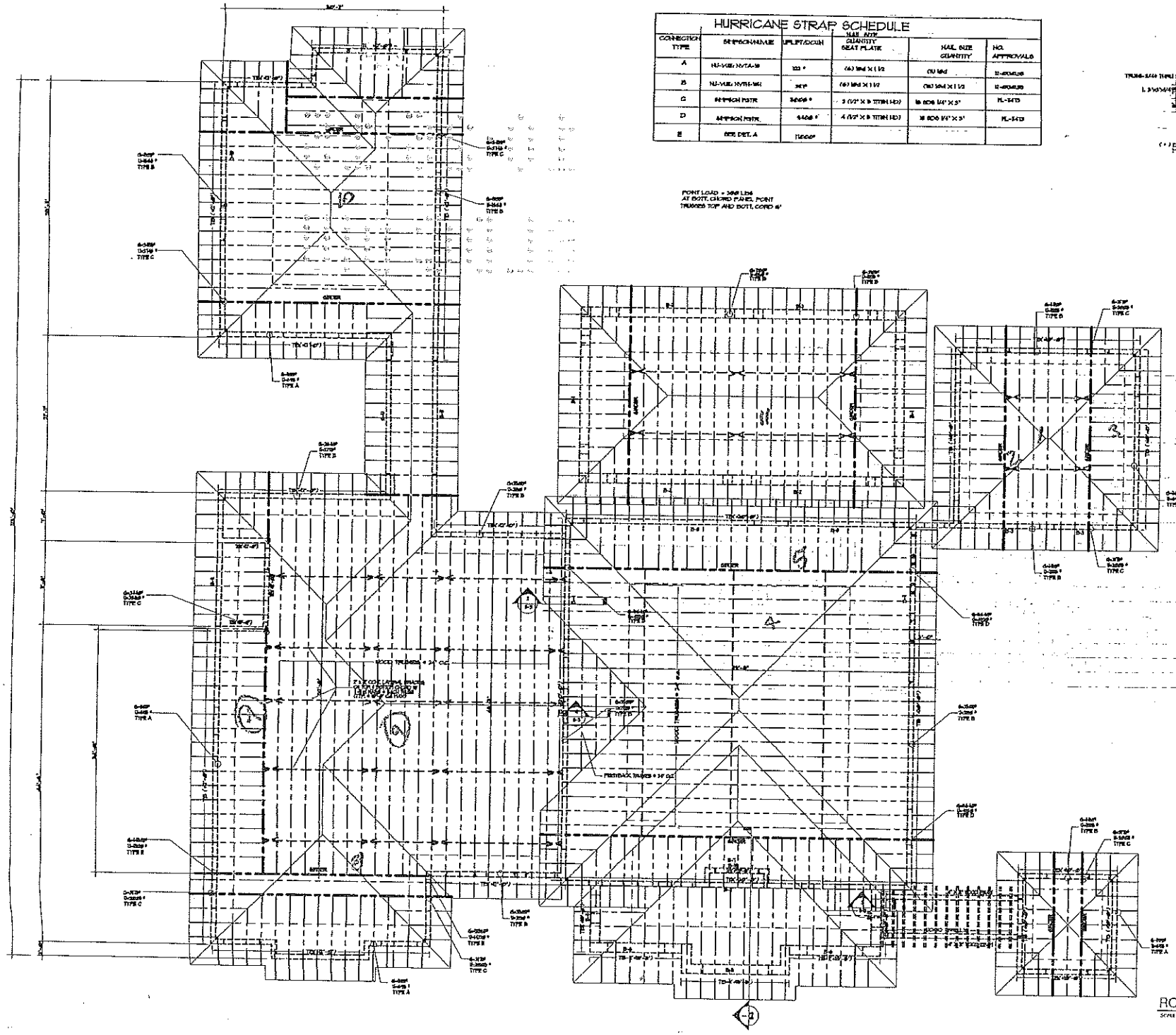

ROOF FRAMIG PLAN
SCALE: 3/16" = 1'-0"

JOSE L. GUZMAN P.E.
4815 SW 25TH AVENUE
MIAMI, FLORIDA 33155
PHONE 785-[illegible]
FAX 785-[illegible]

JOSE L. GUZMAN P.E.
4869 SW 75TH AVENUE
MIAMI, FLORIDA
PHONE 786 338 1082

JOB
SHEET NO. OF
CALCULATED BY J Guzman DATE 10/15
CHECKED BY DATE
SCALE

GRAVITY & UPLIFT LOAD AT TRUSSES

① GARAGE truss

(45-10)2 = 70 (85-10)2 = 150

3'-0" 25'-4" 3'-0"

$U = 3 \times 150 + \frac{25.33}{2} \times 70 = 1335^{\#}$

$G = \left(\frac{25.33}{2} + 3\right) 90 = 1410^{\#}$

② GIRDER — $U = 2.25 \times 1335 = 3005^{\#}$
$G = 2.25 \times 1410 = 3175^{\#}$

③ 70 150

7'-0" 3'-0"

$U = 3.5 \times 70 + 3 \times 150 = 695^{\#}$
$G = 6.5 \times 90 = 585^{\#}$

④

3-0 49'-8" 3-0

$U = 3 \times 150 + \frac{49.67}{2} \times 70 = 2190^{\#}$

$G = \left(\frac{49.67}{2} + 3\right) 90 = 2505^{\#}$

⑤ GIRDER

$U = 2.25 \times 2190 = 4930^{\#}$
$G = 2.25 \times 2505 = 5640^{\#}$

PRODUCT 204-1 (Single Sheets) 205-1 (Padded)

JOSE L. GUZMAN P.E.
4869 SW 75TH AVENUE
MIAMI, FLORIDA
PHONE 786 338 1082

JOB
SHEET NO. OF
CALCULATED BY DATE
CHECKED BY DATE
SCALE

(6)

3-0 48-3 3-0 SIMILAR TO (4)

(7) GIRDER:

U = 4.5 x 35 = 157.5
G = 4.5 x 45 = 202.5

34'-0"

$U = 157.5 \times \frac{34}{2} = 2678$ $G = 202.5 \times \frac{34}{2} = 3442$

(8) GIRDER:

2678
3442

$\frac{52.67}{2} \times 35 = 921.7$ / $\frac{52.67}{2} \times 45 = 1185$

150 70/90 150
3-0 (A) 1-0 24 (B) 3-0
31-0

$U_{(A)} = 150 \times 3 + 70 \times 7 \times \frac{27.5}{31} + 2678 \times \frac{24}{31} + 921.7 \times 24 \times \frac{12}{31} = 11520^{\#}$

$G_{(A)} = 90 \times 3 + 90 \times 7 \times \frac{27.5}{31} + 3442 \times \frac{24}{31} + 1185 \times \frac{24 \times 12}{31} = 14502^{\#}$

$U_{(B)} = 14220^{\#}$ $G_{(B)} = 18265^{\#}$

(9)

70/90 150/90
52'-9"

$U = \frac{52.67}{2} \times 70 + 150 \times 3 = 2295^{\#}$

$G = \quad \times 90 + 3 \times 90 = 2640^{\#}$

PRODUCT 204-1 (Single Sheets) 205-1 (Padded)

JOSE L. GUZMAN P.E.
4869 SW 75TH AVENUE
MIAMI, FLORIDA
PHONE 786 338 1082

JOB
SHEET NO. OF
CALCULATED BY DATE
CHECKED BY DATE
SCALE

TRUSS (10)

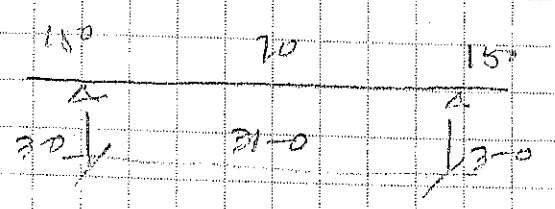

$U = 3 \times 180 + \frac{31}{2} \times 70 = 1535^{\#}$

$G = \left(\frac{31}{2} + 3\right) 90 = 1665^{\#}$

TRUSS (11)

$(38-10)2 = 56$

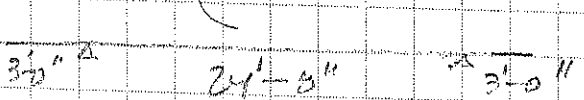

$U = \left(\frac{24.67}{2} + 3\right) 56 = 860^{\#}$

$G = (\quad) 90 = 1350^{\#}$

Summary $U = 2.25 \times 860 = 1935^{\#}$

$G = 1380 \times 2.25 = 3105^{\#}$

JOSE L. GUZMAN P.E.
4869 SW 75TH AVENUE
MIAMI, FLORIDA
PHONE 786 338 1082

JOB
SHEET NO. OF
CALCULATED BY DATE
CHECKED BY DATE
SCALE

CONCRETE BEAM.

B-2

20'-4

DL

$\left(\frac{24.67}{2} + 3\right) 25 = 384$ PLF

in

$\times 20 = 307$ PLF

B-3 8X36"

B-4

17'-0"

DL

$\left(\frac{49.67}{2} + 3\right) 25 = 696$ PLF

$(20-12)\,65 = 520$ PLF

1216

LL

$\times 20 = 557$ PLF ROOF

WALL

557

B-8

25-0 16

DL

$6.5 \times 25 = 162.5$

$(20'-8')\,65 = 780$

943

LL

$6.5 \times 20 = 130$ ROOF

WALL

JOSE L. GUZMAN P.E.
4869 SW 75TH AVENUE
MIAMI, FLORIDA
PHONE 786 338 1082

JOB
SHEET NO. OF
CALCULATED BY DATE
CHECKED BY DATE
SCALE

BEAM B-12

22-0

DL

$\frac{8}{2} \times 25 = 100$

LL

$\frac{8}{2} \times 20 = 80$

PRODUCT 204-1 (Single Sheets) 205-1 (Padded)

Title :
Dsgnr:
Description :

Job #
Date: 2:20PM, 21 OCT 15

Scope :

Concrete Rectangular & Tee Beam Design

Description B-4

General Information

Code Ref: ACI 318-02, 1997 UBC, 2003 IBC, 2003 NFPA 5000

Span	17.00 ft	f'c	3,000 psi
Depth	24.000 in	Fy	60,000 psi
Width	8.000 in	Concrete Wt.	145.0 pcf
		Seismic Zone	0
		End Fixity	Pinned-Pinned
Beam Weight Added Internally		Live Load acts with Short Term	

Reinforcing

	Rebar @ Center of Beam...			Rebar @ Left End of Beam...			Rebar @ Right End of Beam...		
	Count	Size	'd' from Top		Count	Size	'd' from Top	Count	Size	'd' from Top
#1	2	8	21.00 in	#1			in	#1		in

Load Factoring

Note: Load factoring supports 2003 IBC and 2003 NFPA 5000 by virtue of their references to ACI 318-02 for concrete design.
Factoring of entered loads to ultimate loads within this program is according to ACI 318-02 C.2

Uniform Loads

	Dead Load	Live Load	Short Term	Start	End
#1	1.220 k	0.560 k	k	0.000 ft	17.000 ft

Summary

Beam Design OK

Span = 17.00ft, Width= 8.00in Depth = 24.00in

Maximum Moment : Mu	105.87 k-ft	Maximum Deflection	-0.2924 in
Allowable Moment : Mn*phi	132.77 k-ft		
Maximum Shear : Vu	19.93 k	Max Reaction @ Left	16.77 k
Allowable Shear : Vn*phi	38.08 k	Max Reaction @ Right	16.77 k

Shear Stirrups...
Stirrup Area @ Section 0.220 in2

Region	0.000	2.833	5.667	8.500	11.333	14.167	17.000 ft
Max. Spacing	10.500	10.500	10.500	10.500	10.500	10.500	10.500 in
Max Vu	19.929	16.740	8.370	8.171	8.171	16.541	19.729 k

Bending & Shear Force Summary

Bending...	Mn*Phi	Mu, Eq. C-1	Mu, Eq. C-2	Mu, Eq. C-3
@ Center	132.77 k-ft	105.87 k-ft	79.40 k-ft	45.95 k-ft
@ Left End	0.00 k-ft	0.00 k-ft	0.00 k-ft	0.00 k-ft
@ Right End	0.00 k-ft	0.00 k-ft	0.00 k-ft	0.00 k-ft
Shear...	**Vn*Phi**	**Vu, Eq. C-1**	**Vu, Eq. C-2**	**Vu, Eq. C-3**
@ Left End	38.08 k	19.93 k	14.95 k	8.65 k
@ Right End	38.08 k	19.73 k	14.80 k	8.56 k

Deflection

Deflections...	Upward			Downward		
DL + [Bm Wt]	0.0000 in	at	0.0000 ft	-0.1878 in	at	8.5000 ft
DL + LL + [Bm Wt]	0.0000 in	at	0.0000 ft	-0.2924 in	at	8.5000 ft
DL + LL + ST + [Bm Wt]	0.0000 in	at	0.0000 ft	-0.2924 in	at	8.5000 ft

Reactions...	@ Left	@ Right
DL + [Bm Wt]]	12.013 k	12.013 k
DL + LL + [Bm Wt]	16.773 k	16.773 k
DL + LL + ST + [Bm Wt]	16.773 k	16.773 k

Rev: 580000
User: KW-0605358, Ver 5.8.0, 1-Dec-2003
(c)1983-2003 ENERCALC Engineering Software

Concrete Rectangular & Tee Beam Design

Description B-4

Section Analysis

Evaluate Moment Capacity...	Center	Left End	Right End
X : Neutral Axis	5.465 in	0.000 in	0.000 in
a = beta * Xneutral	4.645 in	0.000 in	0.000 in
Compression in Concrete	94.763 k	0.000 k	0.000 k
Sum [Steel comp. forces]	0.000 k	0.000 k	0.000 k
Tension in Reinforcing	-94.800 k	0.000 k	0.000 k
Find Max As for Ductile Failure...			
X-Balanced	12.429 in	0.000 in	0.0000 in
Xmax = Xbal * 0.75	9.321 in	0.000 in	0.000 in
a-max = beta * Xbal	10.564 in	0.000 in	0.000 in
Compression in Concrete	161.634 k	0.000 k	0.000 k
Sum [Steel Comp Forces]	0.000 k	0.000 k	0.000 k
Total Compressive Force	161.634 k	0.000 k	0.000 k
AS Max = Tot Force / Fy	2.694 in2	0.000 in2	0.000 in2
Actual Tension As	1.580 OK	0.000 OK	0.000 OK

Additional Deflection Calcs

Neutral Axis	7.135 in	Mcr	26.29 k-ft
Igross	9,216.00 in4	Ms:Max DL + LL	71.29 k-ft
Icracked	3,789.98 in4	R1 = (Ms:DL+LL)/Mcr	0.369
Elastic Modulus	3,122.0 ksi	Ms:Max DL+LL+ST	71.29 k-ft
Fr = 7.5 * f'c^.5	410.792 psi	R2 = (Ms:DL+LL+ST)/Mcr	0.369
Z:Cracking	0.000 k/in	I:eff... Ms(DL+LL)	4,062.163 in4
Z:cracking > 175 : No Good!		I:eff... Ms(DL+LL+ST)	4,062.163 in4
Eff. Flange Width	8.00 in		

ACI Factors (per ACI 318-02, applied internally to entered loads)

ACI C-1 & C-2 DL	1.400	ACI C-2 Group Factor	0.750	Add"l "1.4" Factor for Seismic	1.400
ACI C-1 & C-2 LL	1.700	ACI C-3 Dead Load Factor	0.900	Add"l "0.9" Factor for Seismic	0.900
ACI C-1 & C-2 ST	1.700	ACI C-3 Short Term Factor	1.300		
....seismic = ST * :	1.100				

Title :
Dsgnr:
Description :

Scope :

Job #
Date: 3:35PM, 21 OCT 15

Rev: 580000
User: KW-0605358, Ver 5.8.0, 1-Dec-2003
(c)1983-2003 ENERCALC Engineering Software

Concrete Rectangular & Tee Beam Design

Description B-~~11~~ B-12

General Information

Code Ref: ACI 318-02, 1997 UBC, 2003 IBC, 2003 NFPA 5000

Span	22.00 ft	f'c	3,000 psi
Depth	48.000 in	Fy	60,000 psi
Width	8.000 in	Concrete Wt.	145.0 pcf
		Seismic Zone	0
		End Fixity	Pinned-Pinned
		Live Load acts with Short Term	

Beam Weight Added Internally

Reinforcing

	Rebar @ Center of Beam...			Rebar @ Left End of Beam...			Rebar @ Right End of Beam...		
	Count	Size	'd' from Top	Count	Size	'd' from Top	Count	Size	'd' from Top
#1	2	6	45.00 in	#1		in	#1		in

Load Factoring

Note: Load factoring supports 2003 IBC and 2003 NFPA 5000 by virtue of their references to ACI 318-02 for concrete design.
Factoring of entered loads to ultimate loads within this program is according to ACI 318-02 C.2

Uniform Loads

	Dead Load	Live Load	Short Term	Start	End
#1	0.100 k	0.100 k	k	0.000 ft	22.000 ft

Summary

Beam Design OK

Span = 22.00ft, Width= 8.00in Depth = 48.00in

Maximum Moment : Mu	51.51 k-ft	Maximum Deflection	-0.0134 in
Allowable Moment : Mn*phi	172.94 k-ft		
Maximum Shear : Vu	6.22 k	Max Reaction @ Left	6.45 k
Allowable Shear : Vn*phi	94.72 k	Max Reaction @ Right	6.45 k

Shear Stirrups...

Stirrup Area @ Section	0.440 in2						
Region	0.000	3.667	7.333	11.000	14.667	18.333	22.000 ft
Max. Spacing	Not Req'd	Not Req'd	Not Req'd	Not Req'd	Not Req'd	Not Req'd	Not Req'd in
Max Vu	6.218	6.218	3.147	3.072	3.072	6.143	6.143 k

Bending & Shear Force Summary

Bending...	Mn*Phi	Mu, Eq. C-1	Mu, Eq. C-2	Mu, Eq. C-3
@ Center	172.94 k-ft	51.51 k-ft	38.63 k-ft	26.50 k-ft
@ Left End	0.00 k-ft	0.00 k-ft	0.00 k-ft	0.00 k-ft
@ Right End	0.00 k-ft	0.00 k-ft	0.00 k-ft	0.00 k-ft
Shear...	**Vn*Phi**	**Vu, Eq. C-1**	**Vu, Eq. C-2**	**Vu, Eq. C-3**
@ Left End	94.72 k	6.22 k	4.66 k	3.20 k
@ Right End	94.72 k	6.14 k	4.61 k	3.16 k

Deflection

Deflections...	Upward			Downward		
DL + [Bm Wt]	0.0000 in	at	0.0000 ft	-0.0111 in	at	11.0000 ft
DL + LL + [Bm Wt]	0.0000 in	at	0.0000 ft	-0.0134 in	at	11.0000 ft
DL + LL + ST + [Bm Wt]	0.0000 in	at	0.0000 ft	-0.0134 in	at	11.0000 ft

Reactions...	@ Left	@ Right
DL + [Bm Wt]]	5.353 k	5.353 k
DL + LL + [Bm Wt]	6.453 k	6.453 k
DL + LL + ST + [Bm Wt]	6.453 k	6.453 k

Rev: 580000
User: KW-0605358, Ver 5.8.0, 1-Dec-2003
(c)1983-2003 ENERCALC Engineering Software

Concrete Rectangular & Tee Beam Design

Description B-11 B-12

Section Analysis

Evaluate Moment Capacity...	Center	Left End	Right End
X : Neutral Axis	3.040 in	0.000 in	0.000 in
a = beta * Xneutral	2.584 in	0.000 in	0.000 in
Compression in Concrete	52.714 k	0.000 k	0.000 k
Sum [Steel comp. forces]	0.000 k	0.000 k	0.000 k
Tension in Reinforcing	-52.800 k	0.000 k	0.000 k
Find Max As for Ductile Failure...			
X-Balanced	26.633 in	0.000 in	0.0000 in
Xmax = Xbal * 0.75	19.974 in	0.000 in	0.000 in
a-max = beta * Xbal	22.638 in	0.000 in	0.000 in
Compression in Concrete	346.358 k	0.000 k	0.000 k
Sum [Steel Comp Forces]	0.000 k	0.000 k	0.000 k
Total Compressive Force	346.358 k	0.000 k	0.000 k
AS Max = Tot Force / Fy	5.773 in2	0.000 in2	0.000 in2
Actual Tension As	0.880 OK	0.000 OK	0.000 OK

Additional Deflection Calcs

Neutral Axis	8.625 in	Mcr	105.16 k-ft
Igross	73,728.00 in4	Ms:Max DL + LL	35.49 k-ft
Icracked	12,526.60 in4	R1 = (Ms:DL+LL)/Mcr	2.963
Elastic Modulus	3,122.0 ksi	Ms:Max DL+LL+ST	35.49 k-ft
Fr = 7.5 * fc^.5	410.792 psi	R2 = (Ms:DL+LL+ST)/Mcr	2.963
Z:Cracking	0.000 k/in	I:eff... Ms(DL+LL)	73,728.000 in4
Z:cracking > 175 : No Good!		I:eff... Ms(DL+LL+ST)	73,728.000 in4
Eff. Flange Width	8.00 in		

ACI Factors (per ACI 318-02, applied internally to entered loads)

ACI C-1 & C-2 DL	1.400	ACI C-2 Group Factor	0.750	Add"l "1.4" Factor for Seismic	1.400
ACI C-1 & C-2 LL	1.700	ACI C-3 Dead Load Factor	0.900	Add"l "0.9" Factor for Seismic	0.900
ACI C-1 & C-2 ST	1.700	ACI C-3 Short Term Factor	1.300		
....seismic = ST * :	1.100				

JOSE L. GUZMAN P.E.
4869 SW 75TH AVENUE
MIAMI, FLORIDA
PHONE 786 338 1082

JOB
SHEET NO. OF
CALCULATED BY DATE
CHECKED BY DATE
SCALE

CMU WALL

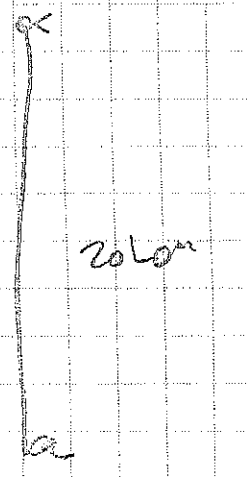

wind load = 41.76 psf

$\frac{41.76}{0.6} = 69.6$ psf

WALL 12' 0"

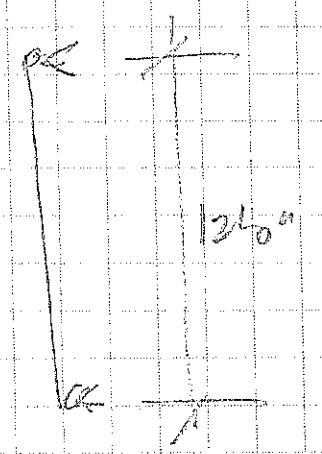

$\frac{51}{0.6} = 85$ psf

Prjct:	Name:
Topic:	Date:
Page:	Chkd:

Design of a Reinforced Masonry Wall with Out-of-Plane Loads
Using the 2011 MSJC Strength Design Code

Material and Construction Data

8 in. CMU, Partial grout, running bond
Wall Weight = 48.89 psf
Type N Masonry cement / Air-entrained PCL Mortar, Coarse Grout
CMU Density = 115.0 pcf
f'_m = 1,500 psi (Specified)
$E_m = 900f'_m$ = 1,350,000 psi

Wall Design Details

Thickness = 7.625 in.
Height = 240.0 in. (Simply Supported Wall, Effective height = H)
x = 3.813 in.
#7 Bars, Fy = 60,000
Reinforcement Spacing = 24.00 in. On-Center
Effective Width = 24.00 in.

Wall Design Section Properties

A_o = 51.30 in^2 per foot width
S_o = 93.20 in^3 per foot width
I_o = 355.3 in^4 per foot width
r_o = 2.632 in

Wall Average Section Properties

A_{avg} = 57.71 in^2 per foot width
I_{avg} = 369.4 in^4 per foot width
r_{avg} = 2.530 in

Wall Support: Simply Supported Wall

Specified Load Components

Load	P (lb)	e (in)	W1(psf)	W2 (psf)	L (lb/ft)	h1 (in)	h2 (in)
Dead	0	0	0	0	0	0	240
Live	0	0	0	0	0	0	240
Soil	0	0	0	0	0	0	240
Fluid	0	0	0	0	0	0	240
Wind	0	0	70	70	0	0	240
Seismic	0	0	0	0	0	0	240
Roof	0	0	0	0	0	0	240
Rain	0	0	0	0	0	0	240
Snow	0	0	0	0	0	0	240

Prjct:	Name:
Topic:	Date:
Page:	Chkd:

f_1 = 1.000
f_2 = 1.000
f_3 = 0.
f_4 = 0.

Controlling Load Cases

Section Forces at the Location of Controlling Flexure and Axial Load
Critical Load Combination: 36) 1.2D + 1.0W + f_1L + 0.5L_r
x/H = 0.500 from bottom of wall
Moment utilization ratio = 0.827
V_u = 0. lb/ft
M_{Lu} = 42,000 lb-in./ft
P_u = 586.7 lb/ft at e_n = 0. in
$Delta_u$ = 3.322 in
$M_{Tu} = M_{Lu} + P_u e_n + P_u(Delta_u)$ = 43,950 lb-in/ft
P = 0. lb/ft at e_n = 0. in
V = 0. lb/ft
M_L = 0. lb-in/ft
Ultimate Moment Capacity = 53,100 lb-in/ft (4,425 lb-ft/ft) at this axial load
Ultimate Shear Capacity = 3,694 lb/ft at this location

The wall is adequate for these critical section forces.

Section Forces at the Location of Controlling Shearing Force
Critical Load Combination: 57) 0.9D + 1.6H + 1.0W
x/H = 0.970 from bottom of wall
V_u = -658.0 lb/ft
M_{Lu} = 4,889 lb-in./ft
P_u = 26.40 lb/ft at e_n = 0. in
$Delta_u$ = 0.308 in
$M_{Tu} = M_{Lu} + P_u e_n + P_u(Delta_u)$ = 4,897 lb-in/ft
P = 0. lb/ft at e_n = 0. in
V = 0. lb/ft
M_L = 0. lb-in/ft
Ultimate Moment Capacity = 51,710 lb-in/ft at this axial load
Ultimate Shear Capacity = 3,648 lb/ft at this location

The wall is adequate for these critical section forces.

These were found to be load cases that controlled the design.
The flexural, shear and axial forces shown are those occurring

Prjct:	Name:
Topic:	Date:
Page:	Chkd:

at the critical section for the case controlled by flexure and
at the critical section for the case controlled by shear.

Design Calculations: Section with Controlling Bending Moment and Axial Load

Section Design Forces Used
V_u = 0. lb/ft (Computed from Loads)
M_{Lu} = 42,000 lb-in./ft (Computed from Loads)
P_u = 586.7 lb/ft at e = 0. in (Computed from Loads)

Wall Axial Design Data
P_u max = 23,970 lbs/ft (Code Equation 3-17 or 3-18)

Maximum Permitted Axial Load for Combination D+0.75L+0.525Q_e = 497.2 lbs/ft (MSJC 3.3.3.5.1)
P at the bottom of the wall for this combination 977.80 lbs/ft
THE MAXIMUM VALUE HAS BEEN EXCEEDED

Wall Flexural Design Data
A_s Required = 0.471 sq.in. in each grouted cell
A_s Provided = 0.600 sq.in.
Rho_{min} = 0.

Wall Flexural Capacity with Specified Steel
a = 1.381 in.
d = 3.813 in.
M_n = 59,000 lb-in/ft
M_u available = 0.900(59,000) = 53,100 lb-in/ft (4,425 lb-ft/ft)

f_r = 63.67 psi
I_{gr} = 355.3 in^4/ft

Shear Design Data
V_n max = 7,947 lbs/ft (Section 3.3.4.1.2)
V_{nm} = 4,617 lbs/ft (Section 3.3.4.1.2.1)
Maximum available V_u is the lesser of:
V_u max = 0.800(7,947) = 6,358 lbs/ft
V_u max = 0.800(4,617 + 0.) = 3,694 lbs/ft CONTROLS (Note: V_{ns} = 0 for walls with out-of-plane loading.)

Service Load Deflection Limitations (MSJC 3.3.5.4)
Maximum permitted service load deflection = 0.007(H) = 0.007(240.0) = 1.679 in
Maximum service load deflection = 1.7507 in
Load combination with maximum deflection: 0.6D + H + 0.6W

Prjct:	Name:
Topic:	Date:
Page:	Chkd:

Development and Splice Lengths for Longitudinal Reinforcement

K = 3.3750 in.

Required Development Length: l_d = 59.39 in.

Required Lap Splice Length: = 59.39 in.

With transverse reinforcement (A_{sc}), the lap splice can be reduced as follows (MSJC 2.1.7.7.1.2):

Minimum Lap Splice Length = 31.50 in. with A_{sc} = 0.1462 in^2 (#4 or larger bars)

Lap Splice Length = 38.41 in. with #3 Transverse Bars (A_{sc} = 0.110 in^2)

Some codes may require epoxy-coated reinforcement to have longer development and splice lengths.

MecaWind Std v2.2.6.1 per ASCE 7-10

Developed by MECA Enterprises, Inc. Copyright www.mecaenterprises.com

Date	: 10/23/2015	Project No.	: JobNo
Company Name	: True	Designed By	: Engineer
Address	: Address	Description	: Description
City	: City	Customer Name	: Customer
State	: State	Proj Location	: Location

File Location: C:\1-projects\1-2015\1500-sanchez rodrigues\sanchez.wnd

Input Parameters: Directional Procedure All Heights Building (Ch 27 Part 1)

Basic Wind Speed(V)	=	175.00 mph			
Structural Category	=	II	Exposure Category	=	C
Natural Frequency	=	N/A	Flexible Structure	=	No
Importance Factor	=	1.00	Kd Directional Factor	=	0.85
Alpha	=	9.50	Zg	=	900.00 ft
At	=	0.11	Bt	=	1.00
Am	=	0.15	Bm	=	0.65
Cc	=	0.20	l	=	500.00 ft
Epsilon	=	0.20	Zmin	=	15.00 ft
Slope of Roof	=	6 : 12	Slope of Roof(Theta)	=	26.57 Deg
h: Mean Roof Ht	=	27.75 ft	Type of Roof	=	GABLED
RHt: Ridge Ht	=	34.50 ft	Eht: Eave Height	=	21.00 ft
OH: Roof Overhang at Eave	=	3.00 ft	Overhead Type	=	OH w/ soffit
Bldg Length Along Ridge	=	55.00 ft	Bldg Width Across Ridge	=	48.00 ft

Gust Factor Calculations

Gust Factor Category I Rigid Structures - Simplified Method

Gust1: For Rigid Structures (Nat. Freq.>1 Hz) use 0.85 = 0.85

Gust Factor Category II Rigid Structures - Complete Analysis

Zm:	0.6*Ht	= 16.65 ft
lzm:	Cc*(33/Zm)^0.167	= 0.22
Lzm:	l*(Zm/33)^Epsilon	= 436.06 ft
Q:	(1/(1+0.63*((B+Ht)/Lzm)^0.63))^0.5	= 0.91
Gust2:	0.925*((1+1.7*lzm*3.4*Q)/(1+1.7*3.4*lzm))	= 0.88

Gust Factor Summary

Not a Flexible Structure use the Lessor of Gust1 or Gust2 = 0.85

Table 26.11-1 Internal Pressure Coefficients for Buildings, GCpi

GCPi : Internal Pressure Coefficient = +/-0.18

Wind Pressurs Main Wind Force Resisting System (MWFRS) - Ref Figure 27.4-1

Kh:	2.01*(Ht/Zg)^(2/Alpha)	= 0.97
Kht:	Topographic Factor (Figure 6-4)	= 1.00
Qh:	.00256*(V)^2*I*Kh*Kht*Kd	= 38.64 psf
Cpww:	Windward Wall Cp(Ref Fig 6-6)	= 0.80
Roof Area		= 3320.56 ft^2
Reduction Factor based on Roof Area		= 0.80

MWFRS-Wall Pressures for Wind Normal to 55 ft Wall (Normal to Ridge)

All pressures shown are based upon ASD Design, with a Load Factor of .6

Wall	Cp	Pressure +GCpi (psf)	Pressure -GCpi (psf)
Leeward Wall	-0.50	-23.37	-9.47
Side Walls	-0.70	-29.94	-16.03

Wall	Elev ft	Kz	Kzt	Cp	qz psf	Press +GCpi	Press -GCpi	Total +/-GCpi
Windward	21.00	0.91	1.00	0.80	36.43	17.82	31.73	41.19
Windward	11.00	0.85	1.00	0.80	33.94	16.13	30.03	39.50
Windward	1.00	0.85	1.00	0.80	33.94	16.13	30.03	39.50

Roof Location	Cp	Pressure +GCpi(psf)	Pressure -GCpi(psf)
Windward - Min Cp	-0.30	-16.81	-2.90
Windward - Max Cp	0.18	-1.04	12.87
Leeward Norm to Ridge	-0.60	-26.66	-12.75

Overhang Bottom Side (Windward only)	0.80	24.77	24.77

Notes - Normal to Ridge

Note (1) Per Fig 27.4-1 Note 7, Since Theta > 10 Deg base calcs on Mean Ht
Note (2) Wall & Roof Pressures = Qh*(G*Cp - GCPi)
Note (3) +GCpi = Positive Internal Bldg Press, -GCPi = Negative Internal Bldg Press
Note (4) Total Pressure = Leeward Press + Windward Press (For + or - GCPi)
Note (5) Ref Fig 27.4-1, Normal to Ridge (Theta>=10), Theta= 26.6 Deg, h/l= 0.50
Note (6) Overhang bottom based upon windward wall Cp and GCpi = 0.

MWFRS-Wall Pressures for Wind Normal to 48 ft wall (Along Ridge)

All pressures shown are based upon ASD Design, with a Load Factor of .6

Wall	Cp	Pressure +GCpi (psf)	Pressure -GCpi (psf)
Leeward Wall	-0.47	-22.42	-8.51
Side Walls	-0.70	-29.94	-16.03

Wall	Elev ft	Kz	Kzt	Cp	qz psf	Press +GCpi	Press -GCpi	Total +/-GCpi
Windward	34.50	1.01	1.00	0.80	40.45	20.55	34.46	42.97
Windward	21.00	0.91	1.00	0.80	36.43	17.82	31.73	40.24
Windward	11.00	0.85	1.00	0.80	33.94	16.13	30.03	38.54
Windward	1.00	0.85	1.00	0.80	33.94	16.13	30.03	38.54

Roof - Dist from Windward Edge	Cp	Pressure +GCpi (psf)	Pressure -GCpi (psf)
Roof: 0.0 ft to 13.9 ft	-0.90	-36.55	-22.64
Roof: 13.9 ft to 27.8 ft	-0.90	-36.45	-22.54
Roof: 27.8 ft to 55.0 ft	-0.50	-23.43	-9.53

Notes - Along Ridge

Note (1) Ref Fig 27.4-1, Parallel to Ridge (All), h/l= 0.50

Wind Pressure on Components and Cladding (Ch 30 Part 1)

All pressures shown are based upon ASD Design, with a Load Factor of .6

Width of Pressure Coefficient Zone "a" = = 4.80 ft

Description	Width ft	Span ft	Area ft^2	Zone	Max GCp	Min GCp	Max P psf	Min P psf
truss	2.00	31.00	320.3	1	0.30	-0.80	18.54	-37.86
truss	2.00	31.00	320.3	2	0.30	-1.20	18.54	-53.32
truss	2.00	31.00	320.3	2H	0.30	-2.20	11.59	-85.00
wall20'	1.00	20.00	133.3	4	0.80	-0.90	37.91	-41.78
wall 12	1.00	12.00	48.0	4	0.88	-0.98	40.94	-44.80
wall 12	1.00	12.00	48.0	5	0.88	-1.16	40.94	-51.75

Khcc:Comp. & Clad. Table 6-3 Case 1 = 0.97
Qhcc:.00256*V^2*Khcc*Kht*Kd = 38.64 psf

HURRICANE STRAP SCHEDULE

CONNECTION TYPE	SIMPSON/NUVUE	UPLIFT/DOWN	NAIL SIZE QUANTITY SEAT PLATE	NAIL SIZE QUANTITY	NO. APPROVALS
A	NU-VUE NVTA-18	[illegible]	(6) 16d X 1 1/2	(8) 16d	[illegible]
B	NU-VUE NVTH-18	[illegible]	(6) 16d X 1 1/2	(8) 16d X 1 1/2	[illegible]
C	SIMPSON PGTR	[illegible]	2 (1/2" X 8 TITAN HD)	16 SDS 1/4" X 3"	PL-[illegible]
D	SIMPSON PGTR	[illegible]	4 (1/2" X 8 TITAN HD)	16 SDS 1/4" X 3"	PL-[illegible]
E	SEE DET. A	[illegible]			

POINT LOAD = [illegible] LBS
AT BOTT. CHORD PANEL POINT
TRUSSES TOP AND BOTT. CORD 8"

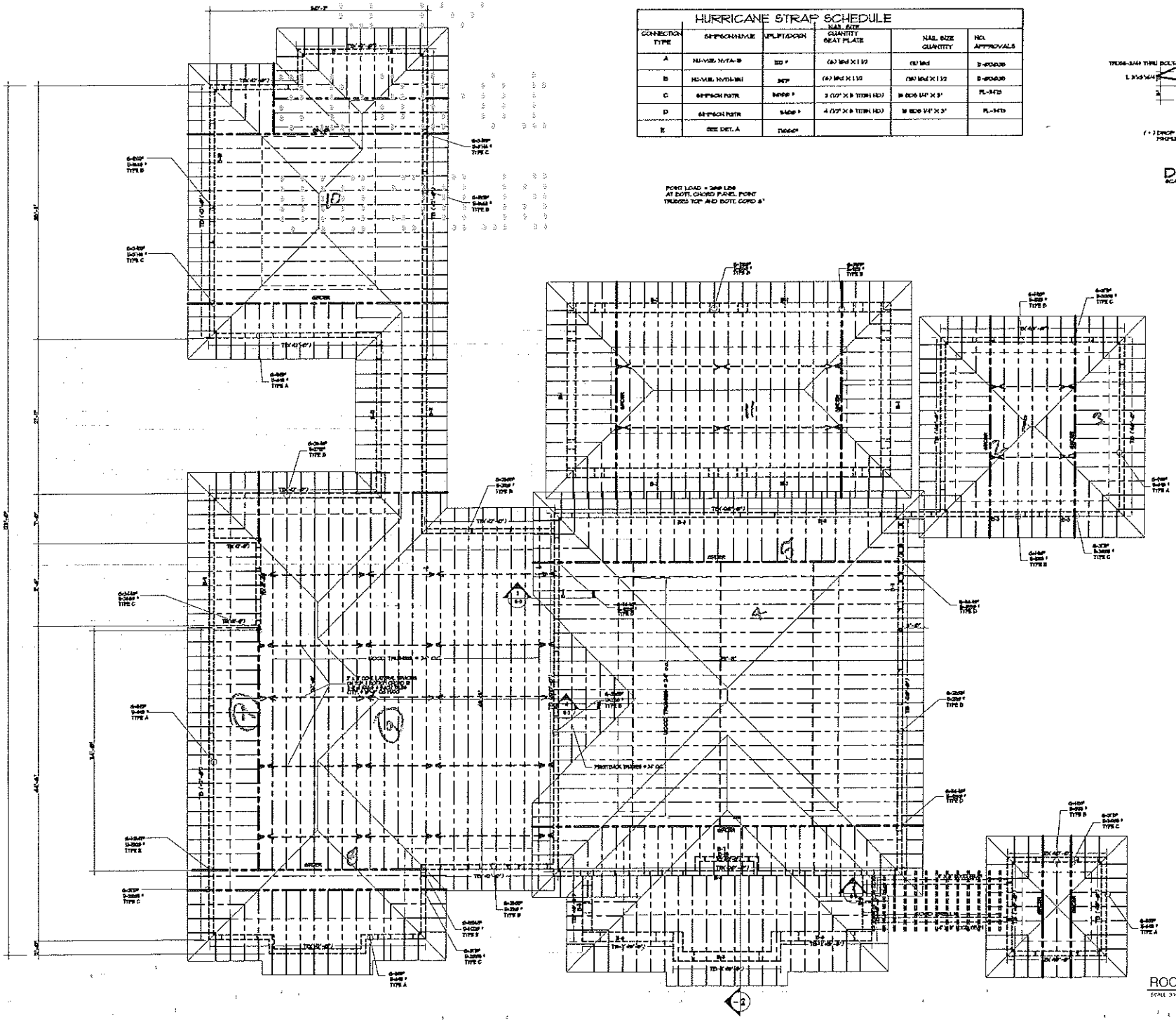

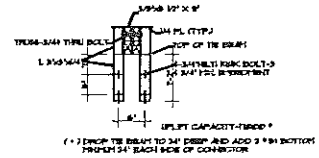

(*) DROP TIE BEAM TO 24" DEEP AND ADD 2 #8 BOTTOM MINIMUM 24" EACH SIDE OF CONNECTOR

DETAIL A
SCALE: 3/4" = 1'-0"

ROOF FRAMIG PLAN
SCALE: 3/32" = 1'-0"

JOSE L GUZMAN P.E.
[illegible]

WIND LOAD TERRACE

MecaWind Std v2.2.6.1 per ASCE 7-10

Developed by MECA Enterprises, Inc. Copyright www.mecaenterprises.com

Date	: 10/21/2015	Project No.	: JobNo
Company Name	: True	Designed By	: Engineer
Address	: Address	Description	: Description
City	: City	Customer Name	: Customer
State	: State	Proj Location	: Location

File Location: E:\`1-2015\1520-sanchez rodrigues\sanchezterrace.wnd

Input Parameters: Directional Procedure Open Building (Ch 27 Part 1)

Basic Wind Speed(V)	=	175.00 mph			
Structural Category	=	II	Exposure Category	=	C
Natural Frequency	=	N/A	Flexible Structure	=	No
Importance Factor	=	1.00	Kd Directional Factor	=	0.85
Alpha	=	9.50	Zg	=	900.00 ft
At	=	0.11	Bt	=	1.00
Am	=	0.15	Bm	=	0.65
Cc	=	0.20	l	=	500.00 ft
Epsilon	=	0.20	Zmin	=	15.00 ft
Slope of Roof	=	6 : 12	Slope of Roof(Theta)	=	26.57 Deg
D: Roof Hor. Width	=	46.00 ft	L: Roof Length along Ridge	=	25.00 ft
h: Mean Roof Ht	=	16.00 ft	Type of Roof	=	PITCHED

Gust Factor Calculations

Gust Factor Category I Rigid Structures - Simplified Method

Gust1: For Rigid Structures (Nat. Freq.>1 Hz) use 0.85 = 0.85

Gust Factor Category II Rigid Structures - Complete Analysis

Zm:	0.6*Ht	=	15.00 ft
lzm:	Cc*(33/Zm)^0.167	=	0.23
Lzm:	l*(Zm/33)^Epsilon	=	427.06 ft
Q:	(1/(1+0.63*((B+Ht)/Lzm)^0.63))^0.5	=	0.93
Gust2:	0.925*((1+1.7*lzm*3.4*Q)/(1+1.7*3.4*lzm))	=	0.89

Gust Factor Summary

Not a Flexible Structure use the Lessor of Gust1 or Gust2 = 0.85

Normal to Ridge - Open Building - Pitched Roof per Figure 27.4-5:

Gamma = 0 & 180 degrees, Obstructed Wind Flow

Load Case	Cnw	Cnl	Windward Wind Pres. psf	Leeward Wind Pres. psf
A	-0.930	-0.930	-27.198	-27.198
B	-0.470	-1.370	-13.745	-40.066

Notes - Normal to Ridge

Along Ridge - Open Building - Pitched Roof per Figure 27.4-5:

Gamma = 90 degrees, Obstructed Wind Flow

Length Along Ridge of Roof	Roof Angle (Theta)	Load Case	Cn psf	Wind Pressure Along Ridge psf
<=16.0	Theta<=45 deg	A	-1.20	-35.094
		B	0.50	14.623
>16.0&<=2*16.0	Theta<=45 deg	A	-0.90	-26.321
		B	0.50	14.623

Notes - Along Ridge

Wind Pressure on Components and Cladding (Ch 30 Part 5)

All pressures shown are based upon ASD Design, with a Load Factor of .6

Width of Pressure Coefficient Zone "a" = = 3.00 ft

Description	Width ft	Span ft	Area ft^2	Zone	Cn Max	Cn Min	Max P psf	Min P psf
truss	2.00	31.00	320.3	1	0.50	-1.29	14.62	-37.77
truss	2.00	31.00	320.3	2	0.50	-1.29	14.62	-37.77
truss	2.00	31.00	320.3	3	0.50	-1.29	14.62	-37.77

WIND LOAD TERRACE

MecaWind Std v2.2.6.1 per ASCE 7-10

Developed by MECA Enterprises, Inc. Copyright www.mecaenterprises.com

Date	: 10/21/2015	Project No.	: JobNo
Company Name	: True	Designed By	: Engineer
Address	: Address	Description	: Description
City	: City	Customer Name	: Customer
State	: State	Proj Location	: Location

File Location: E:\`1-2015\1520-sanchez rodrigues\sanchezterrace.wnd

Input Parameters: Directional Procedure Open Building (Ch 27 Part 1)

Basic Wind Speed(V)	= 175.00 mph				
Structural Category	= II	Exposure Category	=	C	
Natural Frequency	= N/A	Flexible Structure	=	NO	
Importance Factor	= 1.00	Kd Directional Factor	=	0.85	
Alpha	= 9.50	Zg	=	900.00	ft
At	= 0.11	Bt	=	1.00	
Am	= 0.15	Bm	=	0.65	
Cc	= 0.20	l	=	500.00	ft
Epsilon	= 0.20	Zmin	=	15.00	ft
Slope of Roof	= 6 : 12	Slope of Roof(Theta)	=	26.57	Deg
D: Roof Hor. Width	= 46.00 ft	L: Roof Length along Ridge	=	25.00	ft
h: Mean Roof Ht	= 16.00 ft	Type of Roof	=	PITCHED	

Gust Factor Calculations

Gust Factor Category I Rigid Structures - Simplified Method

Gust1: For Rigid Structures (Nat. Freq.>1 Hz) use 0.85 = 0.85

Gust Factor Category II Rigid Structures - Complete Analysis

Zm:	0.6*Ht	=	15.00 ft
lzm:	Cc*(33/Zm)^0.167	=	0.23
Lzm:	l*(Zm/33)^Epsilon	=	427.06 ft
Q:	(1/(1+0.63*((B+Ht)/Lzm)^0.63))^0.5	=	0.93
Gust2:	0.925*((1+1.7*lzm*3.4*Q)/(1+1.7*3.4*lzm))	=	0.89

Gust Factor Summary

Not a Flexible Structure use the Lessor of Gust1 or Gust2 = 0.85

Normal to Ridge - Open Building - Pitched Roof per Figure 27.4-5:

Gamma = 0 & 180 degrees, Obstructed Wind Flow

Load Case	Cnw	Cnl	Windward Wind Pres. psf	Leeward Wind Pres. psf
A	-0.930	-0.930	-27.198	-27.198
B	-0.470	-1.370	-13.745	-40.066

Notes - Normal to Ridge

Along Ridge - Open Building - Pitched Roof per Figure 27.4-5:

Gamma = 90 degrees, Obstructed Wind Flow

Length Along Ridge of Roof	Roof Angle (Theta)	Load Case	Cn psf	Wind Pressure Along Ridge psf
<=16.0	Theta<=45 deg	A	-1.20	-35.094
		B	0.50	14.623
>16.0&<=2*16.0	Theta<=45 deg	A	-0.90	-26.321
		B	0.50	14.623

Notes - Along Ridge

Wind Pressure on Components and Cladding (Ch 30 Part 5)

All pressures shown are based upon ASD Design, with a Load Factor of .6

Width of Pressure Coefficient Zone "a" = = 3.00 ft

Description	Width ft	Span ft	Area ft^2	Zone	Cn Max	Cn Min	Max P psf	Min P psf
truss	2.00	31.00	320.3	1	0.50	-1.29	14.62	-37.77
truss	2.00	31.00	320.3	2	0.50	-1.29	14.62	-37.77
truss	2.00	31.00	320.3	3	0.50	-1.29	14.62	-37.77

Village of Palmetto Bay Florida

PLANS PROCESSING

Process Number: Bld-2015-7898

Description of Work: New SFR

Property Address: 13940 Old Cutler Rd

Department	Date In	Date Out	Total Business Days	Approved	Denied	Comments
Planning & Zoning	10/26/15	10/28/15			✓	
	1/20/16	1/20/16				
Building	11/25/15	12/8/15			✓	
ADA Review		3/2/16			✓	DTTSCHED
					✓	DTTSCHED
Structural	11/20/15	11/24/15	2	✓	✓	
Electrical	11/2/15	11/2/15	1		✓	
	1/20/16	1/25/16		✓		
Mechanical	10/30/15	11/3/15		✓		
Plumbing	10/28/2015	10/29/15			✓	
	1/25/16	1/25/16			✓	
Public Works	11/4/15	11/20/15				
	1/25/16	2/9/16			✓	
Pending Corrections	12/11/15					Comment sheet
Code Enforcement Verification	3/7/16	3/7/16			✓	Comment sheet
Job Cost/ Value of Work (Inspector Approval)	700,000					
Building Official approval						
Final Signature						
Pricing						
Call for Pick up						

198 small

Flag

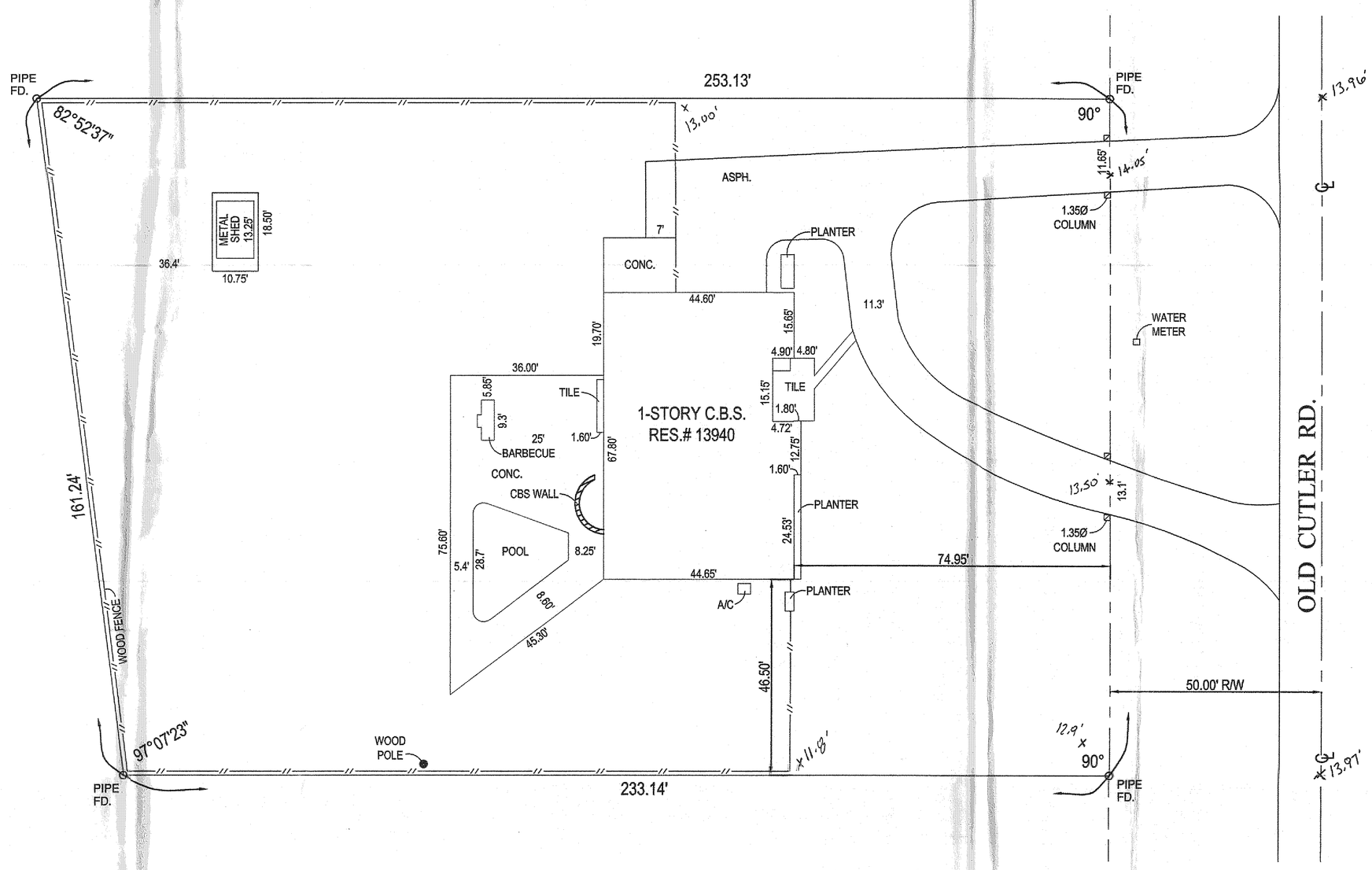

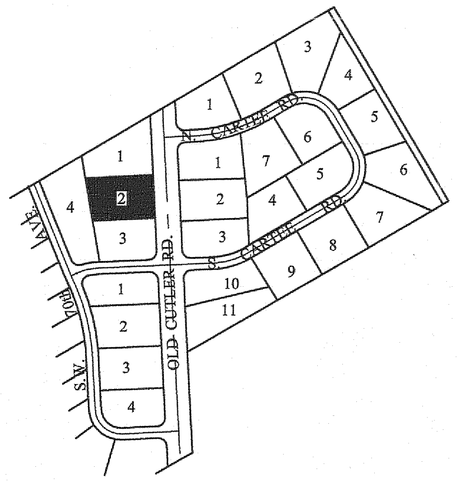

LOCATION MAP

SCALE: N.T.S.

LEGAL DESCRIPTION:

LOT 2 IN BLOCK 3 OF FARMER'S ACRES, ACCORDING TO THE PLAT THEREOF, AS RECORDED IN PLAT BOOK 50 AT PAGE 65 OF THE PUBLIC RECORDS OF MIAMI-DADE COUNTY, FLORIDA.

SURVEYORS NOTES:

1). LEGEAL DESCRIPTION PROVIDED BY CLIENT.
2.) ONLY RECORD PLAT EASEMENTS ARE SHOWN.
3). RIGHT OF WAY INFORMATION OBTAINED FROM RECORD PLAT.
4). IN FEDERAL FLOOD ZONE X, PANEL 0468 LAST REVISED 09/11/2009.
5). BENCHMARK USED - DCBM# T-612.
6). ELEVATIONS ARE REFERENCED TO THE NATIONAL GEODETIC VERTICLE DATUM 1929 ADJUSTMENT (NGVD1929).

SURVEYOR'S CERTIFICATION:

NOT VALID UNLESS SEALED WITH AN EMBOSSED SURVEYORS SEAL.
I HEREBY CERTIFY THAT THE SURVEY REPRESENTED HEREON COMPLIES WITH THE MINIMUM TECHNICAL STANDARD ADOPTED BY THE FLORIDA BOARD OF PROFESSIONAL SURVEYORS AND MAPPERS IN CHAPTER 5J-17 OF THE FLORIDA ADMINISTRATIVE CODE, PURSUANT TO SECTION 472.027, FLORIDA STATUTES.

COUNTY-WIDE LAND SURVEYORS, INC. LB 4680

DATE: 10-19-2015

BY:
JOSEPH L. MARTIN
PROFESSIONAL SURVEYOR & MAPPER No 4368
STATE OF FLORIDA

COUNTY-WIDE LAND SURVEYORS, INC.
LAND SURVEYORS - PLANNERS
PO BOX 823271
SOUTH FLORIDA, FLORIDA 33082-3271
305-772-0766
15358 S.W. 140 ST. MIAMI, FL. 3319

RECORD OF REVISION				
No.	DATE	DESCRIPTION	BY	APP.
			JM	JM

BOUNDARY SURVEY

ADDRESS: ROUGET SANCHEZ
13940 OLD CUTLER RD. PALMETTO BAY, FLORIDA

SCALE:	1"= 20'
SURVEYOR:	JLM
DRAWN BY:	JLM
CHECKED BY:	JLM
SET #:	
DATE:	10/17/2015
PROJECT No:	2015-107
SHEET:	1 OF 1

UPB
10-20-15
BLDG DIV

CUSTOM RESIDENCE

MR. & MRS. R. SANCHEZ / NOLAN RODRIGUEZ

PALMETTO BAY, FLORIDA

BELLON ARCHITECTURE
13131 S.W. 132 Street
MIAMI, FL. 33186

ZONING LEGEND

ZONING: E-1

NET LOT AREA: 38,900 S.F. (.89 ACRES)

HEIGHT (TO RIDGE OF ROOF): 31'-3" (35' MAX. ALLOWED)

LOT COVERAGE (EVERYTHING UNDER ROOF): 7,654 S.F.

MAX. ALLOWED S.F. (22 % OF NET AREA) — PROPOSED S.F. (22 % OF NET AREA)

SETBACKS:	REQUIRED	PROPOSED
FRONT	50'-0"	51'-8"
SIDE RIGHT	15'-0"	15'-0"
SIDE LEFT	15'-0"	15'-0"
REAR	25'-0"	53'-1"

- SITE TO BE FILLED TO COUNTY FLOOD CRITERIA ELEVATION N.G.V.D. OR AN ELEVATION NO LESS THAN THE HIGHEST APPROVED CROWN ELEVATION OF THE ROAD ABUTTING THE PROPERTY.

- AREA ADJACENT TO LAKE OR CANAL TO BE GRADED SO AS TO PREVENT DIRECT OVERLAND DISCHARGE OF STORMWATER INTO LAKE OR CANAL.

- LOT WILL BE GRADED SO AS TO PREVENT DIRECT OVERLAND DISCHARGE OF STORMWATER ONTO ADJACENT PROPERTY. APPLICANT WILL PROVIDE CERTIFICATION PRIOR TO FINAL INSPECTION.

- IN ADDITION TO THE REQUIREMENTS OF THIS PERMIT, THERE MAY BE ADDITIONAL RESTRICTIONS APPLICABLE TO THIS PROPERTY THAT MAY BE FOUND IN THE PUBLIC RECORDS OF THIS COUNTY, SECTION 553.79 (10), FLORIDA STATUTES, EFFECTIVE 7/10/87.

- A SEPARATE PERMIT WILL BE REQUIRED FOR ALL DRIVEWAY APPROACHES. CONTACT PUBLIC WORKS DEPARTMENT.

- THE HEIGHT OF FENCES, WALLS AND HEDGES SHALL NOT EXCEED 2.5 FEET IN HEIGHT WITHIN 10 FEET OF THE EDGE OF ANY DRIVEWAY LEADING TO A RIGHT OF WAY. THE HEIGHT OF FENCES IS BEING MEASURED FROM GRADE. GRADE ELEVATION = ELEVATION OF PUBLIC SIDEWALK OR CROWN OF ROAD.

- O.S.F.H. (OUTSIDE SPECIAL FLOOD HAZARD): ALL ELECTRICAL AND MECHANICAL EQUIPMENT MUST BE LOCATED AT OR ABOVE THE REQUIRED LOWEST FLOOR ELEVATION.

- S.F.H. (SPECIAL FLOOD HAZARD) ALL ELECTRICAL AND MECHANICAL EQUIPMENT MUST BE LOCATED AT OR ABOVE THE BASE FLOOD ELEVATION OR REQUIRED LOWEST FLOOR ELEVATION WHICH EVER IS HIGHER.

- LOWEST FLOOR - Shall mean the lowest floor of the lowest enclosed area (including basement). An unfinished or flood resistant enclosure, usable for parking of vehicles, building access or storage in an area other than a basement area, is not considered a building's lowest floor; provided that such enclosure is not built as to render the structure in violation of the applicable non-elevation design requirements in sections 11c-3,11c-4, 11c-5.

- GARAGE OR STORAGE (FHA, OSHA 11c-5-f): Fully enclosed areas below the base elevations shall be designed to preclude finished living space except allowable uses i.e.parking,limited storage and building access and shall be designed to allow for the entry and exit of flood-waters to automatically equalize hydrostatic flood forces on exterior walls.

Design for complying with this requirement must be either certified by a proffessional engineer or architect and meet the following criteria:

1. Provide a minimum of two (2) openings, having a total net area of not less than one (1) square inch for every square foot of enclosed area size. Bottom of all openings shall be not higher than one (1) foot above grade.
2. The interior portion of such enclosed areas shall NOT be partitioned or finish into separate rooms or air conditioned.

GENERAL NOTES:

1. CONTRACTOR SHALL VERIFY ALL DIMENSIONS AND FIELD CONDITIONS AND NOTIFY ARCHITECT IF ANY DISCREPANCIES BEFORE ANY WORK IS PERFORMED.
2. IN THE EVENT OF ANY ERRORS OR OMISSIONS IN THESE PLANS, ARCHITECT TO BE NOTIFIED AT ONCE.
3. ALL SHOP DRAWINGS TO BE SUBMITTED TO ARCHITECT FOR APPROVAL, PRIOR TO FABRICATION OR INSTALLATION.
4. SEE STRUCTURAL, PLUMBING, AND ELECTRICAL DRAWINGS FOR DETAILS.
5. ALL WORK TO BE IN ACCORDANCE TO THE LATEST COUNTY CODE AND THE SOUTH FLORIDA BUILDING CODE.
6. ELECTRICAL AND PLUMBING CONTRACTORS TO HAVE SEPARATE BUILDING PERMITS.
7. CONCRETE COMPRESSIVE STRENGTH TO BE 2500 PI IN 28 DAYS UNLESS OTHERWISE NOTED.
8. REINFORCING STEEL SHALL CONFORM WITH ASTM A-615 GR. 60 SPECS LATEST REVISIONS.
9. STRUCTURAL STEEL SHALL CONFORM WITH ASTM A-36 LATEST REVISIONS.
10. ALL WOOD IN CONTACT WITH CONCRETE AND MASONRY SHOULD BE PRESSURE TREATED.
11. STRUCTURAL LUMBER SHALL HAVE A MINIMUM BENDING STRESS OF 1200 PSI.
12. DO NOT SCALE DRAWINGS, USE FIGURED DIMENSIONS ONLY.

LEGAL DESCRIPTION :

LOT 2 IN BLOCK 3 OF FARMERS ACRES, ACCORDING TO THE PLAT THEREOF, AS RECORDED IN PLAT BOOK 50 AT PAGE 65 OF THE PUBLIC RECORDS OF MIAMI-DADE COUNTY, FLORIDA.

SOIL STATEMENT :

SOIL AT THIS SITE IS ROCK & SAND ADEQUATE TO SUPPORT THE DESIGN LOAD OF 2000 PSF AFTER EXCAVATION. A SIGNED & SEALED LETTER WILL BE SUBMITTED BY THE ARCHITECT OR THE ENGINEER ATTESTING THAT THE SITE HAS BEEN OBSERVED AND THE FOUNDATION CONDITIONS ARE SIMILAR TO THOSE UPON WHICH THE DESIGN IS BASED ON.

TERMITE SOIL STATEMENT :

ALL BUILDING SHALL HAVE A PRE-CONSTRUCTION TREATMENT PROTECTION AGAINTS SUBTERRANEAN TERMITES, THE RULES AND LAWS AS ESTABLISHED BY THE FLORIDA DEPARTMENT OF AGRICULTURE AND CONSUMER SERVICES SHALL BE DEEMED AS APPROVED WITH RESPECT TO PRECONSTRUCTION SOIL TREATMENT FOR PROTECTION AGAINST SUBTERRANEAN TERMITES. A CERTIFICATE OF COMPLIANCE SHALL BE ISSUED TO THE BUILDING DEPARTMENT BY THE LICENSED PEST CONTROL COMPANY THAT CONTAINS THE FOLLOWING STATEMENT: " THE BUILDING HAS RECEIVED A COMPLETE TREATMENT FOR THE PREVENTION OF SUBTERRANEAN TERMITES. TREATMENT IS IN ACCORDANCE WITH RULES AND LAWS ESTABLISHED BY THE FLORIDA DEPARTMENT OF AGRICULTURE AND CONSUMER SERVICES (AS PER R4409.13.5 FBC 2014)

VIOLATION NOTE:

FAILURE TO MAINTAIN LANDSCAPING ACCORDING TO APPROVED PLANS IS A CODE VIOLATION. FAILURE TO PLANT, PRESERVE, OR MAINTAIN IS A SEPARATE VIOLATION, EACH PLANT, EACH DAY. 18A-13 (C)

* VISIBILITY TRIANGLES NOTE:

ALL TRIANGLES OF VISIBILITY SHALL BE KEPT CLEAR OF VISUAL OBSTRUCTIONS BETWEEN A HEIGHT OF TWO AND A HALF (2.5) FEET AND EIGHT (8) FEET ABOVE THE ESTABLISHED GRADE.

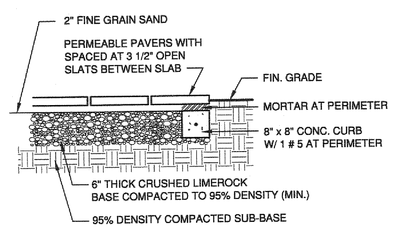

A PRECAST CONC. SLAB DETAIL
NTS

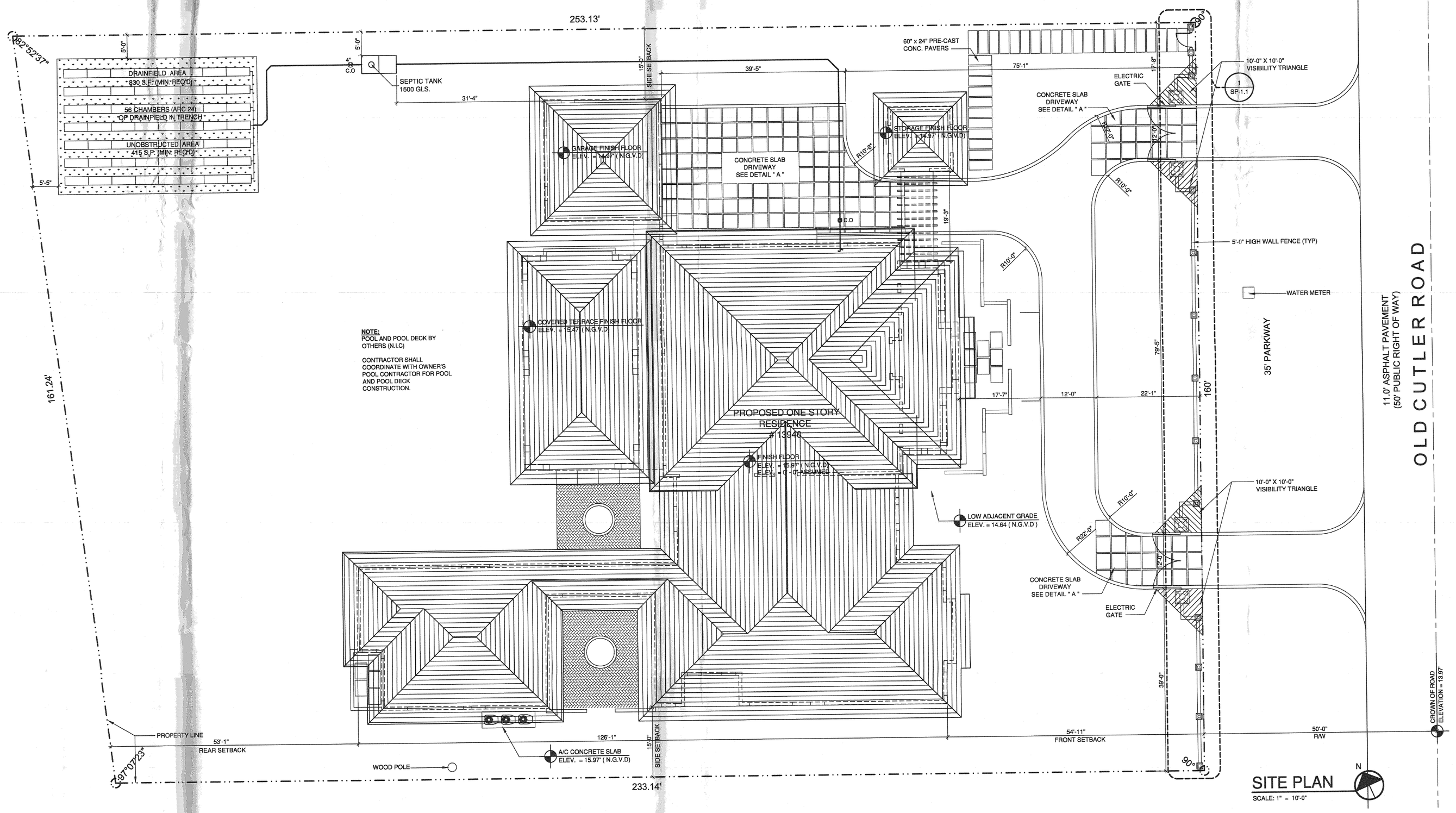

SITE PLAN
SCALE: 1" = 10'-0"

BELLON architecture

13131 S.W. 132 STREET
SUITE 104
MIAMI, FLORIDA 33186

T. (305) 278-7776
F. (305) 278-7473
WWW.BELLONMILANES.COM
AA-26002616

ARCHITECTURE
LAND PLANNING
INTERIORS

CONSTRUCTION MANAGEMENT

CONSULTANTS

A CUSTOM RESIDENCE FOR:

Mr. AND MRS. R. SANCHEZ / NOLAN RODRIGUEZ

13940 OLD CUTLER ROAD

PALMETTO BAY, FLORIDA

MARK	DATE	DESCRIPTION

PROJECT No. LB269

DRAWN BY: JP / AM

CHECKED BY: LB

DATE: 06-18-14

STATE OF FLORIDA · LEOPOLDO BELLON · AR-8737 · REGISTERED ARCHITECT

LEOPOLDO BELLON, AIA (AR-8737)

SHEET TITLE

SITE PLAN

SP-1

SHEET OF

ZONING LEGEND

ONE STORY RESIDENCE 1

ZONING: E-1

NET LOT AREA: 38,768 S.F. (.88 ACRES) 1

HEIGHT (TO RIDGE OF ROOF): 30'-2" 2

LOT COVERAGE (EVERYTHING UNDER ROOF): 8,526 S.F. 1

	MAX. ALLOWED	PROPOSED
	(8,528 s.f.) S.F. (22 % OF NET AREA)	8,526 s.f. S.F. (22 % OF NET AREA) 1

SETBACKS:	REQUIRED	PROPOSED
FRONT	50'-0"	51'-8"
SIDE RIGHT	15'-0"	19'-0" 1
SIDE LEFT	15'-0"	15'-0"
REAR	25'-0"	53'-1"

- SITE TO BE FILLED TO COUNTY FLOOD CRITERIA ELEVATION N.G.V.D. OR AN ELEVATION NO LESS THAN THE HIGHEST APPROVED CROWN ELEVATION OF THE ROAD ABUTTING THE PROPERTY.

- AREA ADJACENT TO LAKE OR CANAL TO BE GRADED SO AS TO PREVENT DIRECT OVERLAND DISCHARGE OF STORMWATER INTO LAKE OR CANAL.

- LOT WILL BE GRADED SO AS TO PREVENT DIRECT OVERLAND DISCHARGE OF STORMWATER ONTO ADJACENT PROPERTY. APPLICANT WILL PROVIDE CERTIFICATION PRIOR TO FINAL INSPECTION.

- IN ADDITION TO THE REQUIREMENTS OF THIS PERMIT, THERE MAY BE ADDITIONAL RESTRICTIONS APPLICABLE TO THIS PROPERTY THAT MAY BE FOUND IN THE PUBLIC RECORDS OF THIS COUNTY, SECTION 553.79 (10), FLORIDA STATUTES, EFFECTIVE 7/1/87.

- A SEPARATE PERMIT WILL BE REQUIRED FOR ALL DRIVEWAY APPROACHES. CONTACT PUBLIC WORKS DEPARTMENT.

- THE HEIGHT OF FENCES, WALLS AND HEDGES SHALL NOT EXCEED 2.5 FEET IN HEIGHT WITHIN 10 FEET OF THE EDGE OF ANY DRIVEWAY LEADING TO A RIGHT OF WAY. THE HEIGHT OF FENCES IS BEING MEASURED FROM GRADE.
GRADE ELEVATION = ELEVATION OF PUBLIC SIDEWALK OR CROWN OF ROAD.

- O.S.F.H. (OUTSIDE SPECIAL FLOOD HAZARD): ALL ELECTRICAL AND MECHANICAL EQUIPMENT MUST BE LOCATED AT OR ABOVE THE REQUIRED LOWEST FLOOR ELEVATION.

- S.F.H. (SPECIAL FLOOD HAZARD) ALL ELECTRICAL AND MECHANICAL EQUIPMENT MUST BE LOCATED AT OR ABOVE THE BASE FLOOD ELEVATION OR REQUIRED LOWEST FLOOR ELEVATION WHICH EVER IS HIGHER.

- LOWEST FLOOR - Shall mean the lowest floor of the lowest enclosed area (including basement). An unfinished or flood resistant enclosure, usable for parking of vehicles, building access or storage in an area other than a basement area, is not considered a building's lowest floor; provided that such enclosure is not built as to render the structure in violation of the applicable non-elevation design requirements in sections 11c-3,11c-4, 11c-5.

- GARAGE OR STORAGE (FHA, OSHA 11c-5-f): Fully enclosed areas below the base elevations shall be designed to preclude finished living space except allowable uses i.e.parking,limited storage and building access and shall be designed to allow for the entry and exit of flood-waters to automatically equalize hydrostatic flood forces on exterior walls.

Design for complying with this requirement must be either certified by a proffessional engineer or architect and meet the following criteria:

1. Provide a minimum of two (2) openings, having a total net area of not less than one (1) square inch for every square foot of enclosed area size. Bottom of all openings shall be not higher than one (1) foot above grade.
2. The interior portion of such enclosed areas shall NOT be partitioned or finish into separate rooms or air conditioned.

GENERAL NOTES:

1. CONTRACTOR SHALL VERIFY ALL DIMENSIONS AND FIELD CONDITIONS AND NOTIFY ARCHITECT IF ANY DISCREPANCIES BEFORE ANY WORK IS PERFORMED.
2. IN THE EVENT OF ANY ERRORS OR OMISSIONS IN THESE PLANS, ARCHITECT TO BE NOTIFIED AT ONCE.
3. ALL SHOP DRAWINGS TO BE SUBMITTED TO ARCHITECT FOR APPROVAL, PRIOR TO FABRICATION OR INSTALLATION.
4. SEE STRUCTURAL, PLUMBING, AND ELECTRICAL DRAWINGS FOR DETAILS.
5. ALL WORK TO BE IN ACCORDANCE TO THE LATEST COUNTY CODE AND THE SOUTH FLORIDA BUILDING CODE.
6. ELECTRICAL AND PLUMBING CONTRACTORS TO HAVE SEPARATE BUILDING PERMITS.
7. CONCRETE COMPRESSIVE STRENGTH TO BE 2500 PI IN 28 DAYS UNLESS OTHERWISE NOTED.
8. REINFORCING STEEL SHALL CONFORM WITH ASTM A-615 GR. 60 SPECS LATEST REVISIONS.
9. STRUCTURAL STEEL SHALL CONFORM WITH ASTM A-36 LATEST REVISIONS.
10. ALL WOOD IN CONTACT WITH CONCRETE AND MASONRY SHOULD BE PRESSURE TREATED.
11. STRUCTURAL LUMBER SHALL HAVE A MINIMUM BENDING STRESS OF 1200 PSI.
12. DO NOT SCALE DRAWINGS, USE FIGURED DIMENSIONS ONLY.

LEGAL DESCRIPTION :

LOT 2 IN BLOCK 3 OF FARMERS ACRES, ACCORDING TO THE PLAT THEREOF, AS RECORDED IN PLAT BOOK 50 AT PAGE 65 OF THE PUBLIC RECORDS OF MIAMI-DADE COUNTY, FLORIDA.

SOIL STATEMENT :

SOIL AT THIS SITE IS ROCK & SAND ADEQUATE TO SUPPORT THE DESIGN LOAD OF 2000 PSF AFTER EXCAVATION. A SIGNED & SEALED LETTER WILL BE SUBMITTED BY THE ARCHITECT OR THE ENGINEER ATTESTING THAT THE SITE HAS BEEN OBSERVED AND THE FOUNDATION CONDITIONS ARE SIMILAR TO THOSE UPON WHICH THE DESIGN IS BASED ON.

TERMITE SOIL STATEMENT :

ALL BUILDING SHALL HAVE A PRE-CONSTRUCTION TREATMENT PROTECTION AGAINTS SUBTERRANEAN TERMITES. THE RULES AND LAWS AS ESTABLISHED BY THE FLORIDA DEPARTMENT OF AGRICULTURE AND CONSUMER SERVICES SHALL BE DEEMED AS APPROVED WITH RESPECT TO PRECONSTRUCTION SOIL TREATMENT FOR PROTECTION AGAINST SUBTERRANEAN TERMITES. A CERTIFICATE OF COMPLIANCE SHALL BE ISSUED TO THE BUILDING DEPARTMENT BY THE LICENSED PEST CONTROL COMPANY THAT CONTAINS THE FOLLOWING STATEMENT: " THE BUILDING HAS RECEIVED A COMPLETE TREATMENT FOR THE PREVENTION OF SUBTERRANEAN TERMITES. TREATMENT IS IN ACCORDANCE WITH RULES AND LAWS ESTABLISHED BY THE FLORIDA DEPARTMENT OF AGRICULTURE AND CONSUMER SERVICES (AS PER R4409.13.5 FBC 2014)

VIOLATION NOTE:

FAILURE TO MAINTAIN LANDSCAPING ACCORDING TO APPROVED PLANS IS A CODE VIOLATION. FAILURE TO PLANT, PRESERVE, OR MAINTAIN IS A SEPARATE VIOLATION, EACH PLANT, EACH DAY. 18A-13 (C)

* VISIBILITY TRIANGLES NOTE:

ALL TRIANGLES OF VISIBILITY SHALL BE KEPT CLEAR OF VISUAL OBSTRUCTIONS BETWEEN A HEIGHT OF TWO AND A HALF (2.5) FEET AND EIGHT (8) FEET ABOVE THE ESTABLISHED GRADE.

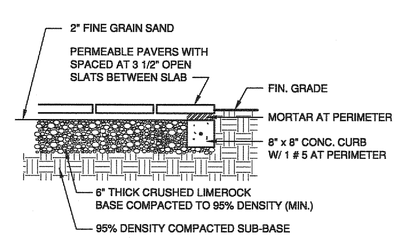

A PRECAST CONC. SLAB DETAIL
NTS

FLOOD NOTE:

THE A/C CONDENSING UNITS AND POOL EQUIPMENT, WILL BE AT THE BFE (15.97' NGVD) MINIMUM.

FLOOD LEGEND
Residential New Construction

ADDRESS: 13940 OLD CUTTLER ROAD PALMETTO BAY, FL FOLIO: 33-5023-002-0200

LOT: 2 BLOCK: 3 PLAT BOOK: 50 PAGE: 65

FLOOD ZONE: X BASE FLOOD ELEVATION: -9999

HIGHEST CROWN OF ROAD ELEVATION: 13.97', TAKEN FROM THE ATTACHED CERTIFIED SURVEY, OR A CERTIFIED SURVEY PREPARED BY:

JOSEPH L. MARTIN (SURVEYOR'S NAME) PLS LIC.#: 4368

	LOWEST FLOOR ELEVATION	GARAGE / STORAGE FLOOR ELEVATION	ADJACENT GRADE ELEVATION	LOWEST EQUIPMT. ELEV.
REQUIRED	-9999 FT. NGVD	-9999 FT. NGVD	-9999 FT. NGVD	-9999 FT. NGVD
PROPOSED	15.97 FT. NGVD	14.97 FT. NGVD	14.64 FT. NGVD	15.97 FT. NGVD

ALL ELECTRICAL, MECHANICAL AND PLUMBING WILL BE PLACED AT OR ABOVE THE BASE FLOOD ELEVATION. (B.F.E.)

ALL AREAS BELOW B.F.E. SHALL BE PROVIDED WITH A MINIMUM OF TWO (2) OPENINGS, HAVING A TOTAL NET AREA OF NO LESS THAN ONE SQUARE INCH OF OPENING FOR EVERY SQUARE FOOT OF ENCLOSED AREA SUBJECT TO FLOODING. THE BOTTOM OF THE OPENING WILL BE NO HIGHER THAN ONE (1) FOOT ABOVE GRADE AND LOCATED ON DIFFERENT SIDES OF THE ENCLOSED AREA. OPENINGS WILL BE EQUIPPED WITH SCREENS OR LOUVERS. FLOOD RESISTANT MATERIALS WILL BE USED BELOW B.F.E.

THE SITE WILL BE GRADED IN A MANNER TO PREVENT THE FLOODING OF ADJACENT PROPERTIES. WHERE NECESSARY INTERCEPTOR SWALES WILL BE CONSTRUCTED ON-SITE WITH NO ENCROACHMENT OVER ADJACENT PROPERTIES.

0'-0"=15.97 NGVD

1

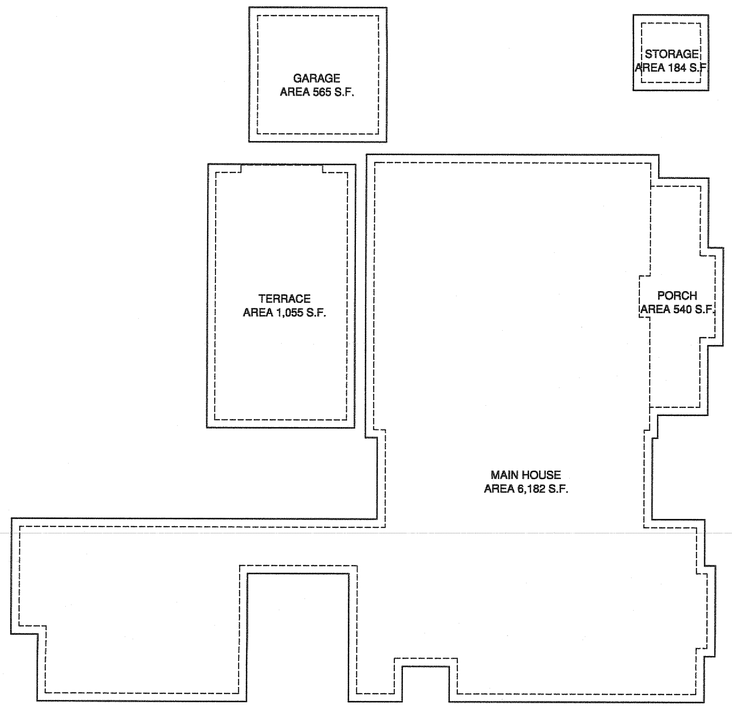

AREA STUDY
SCALE: 1/16 = 1'-0"

AREA BREAKDOWN COMPUTATION

SPACE	ACTUAL AREA	ROOF OVERHANGS	TOTAL
MAIN HOUSE	5,505 S.F.	677 S.F.	6,182 S.F.
GARAGE	458 S.F.	107 S.F.	565 S.F.
STORAGE	121 S.F.	63 S.F.	184 S.F.
COVERED TERRACE	887 S.F.	168 S.F.	1,055 S.F.
ENTRY PORCH	412 S.F.	128 S.F.	540 S.F.
GRAN TOTAL			8,526 S.F.

1

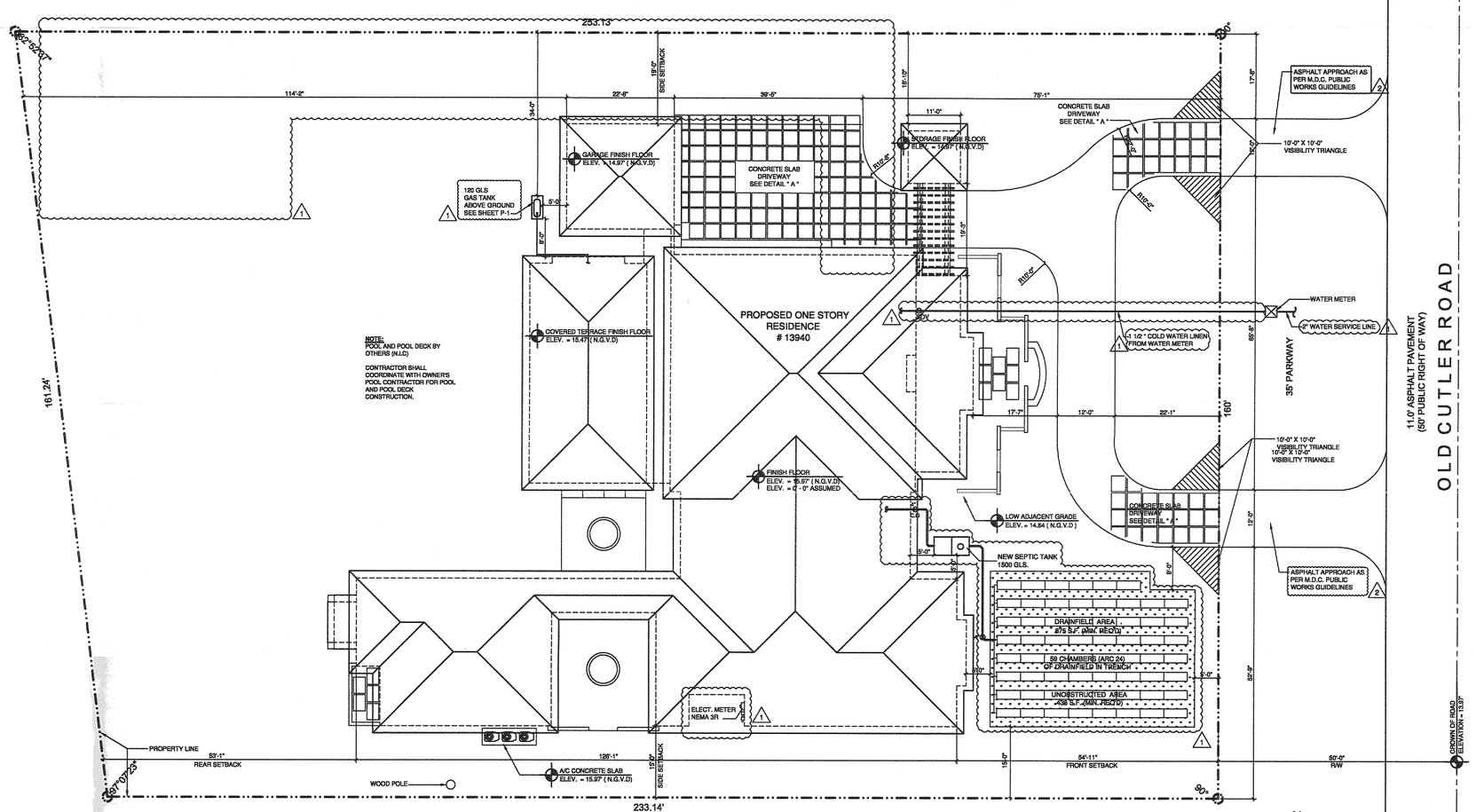

SITE PLAN
SCALE: 1/16 = 1'-0"

N

BELLÓN architecture

13131 S.W. 132 STREET
SUITE 104
MIAMI, FLORIDA 33186

T. (305) 276-7776
F. (305) 276-7473
WWW.BELLONMILANO5.COM
AA-26002616

ARCHITECTURE
LAND PLANNING
INTERIORS
CONSTRUCTION MANAGEMENT

CONSULTANTS

A CUSTOM RESIDENCE FOR:
Mr. AND MRS. R. SANCHEZ / NOLAN RODRIGUEZ
13940 OLD CUTTLER ROAD
PALMETTO BAY, FLORIDA

MARK	DATE	DESCRIPTION
1	12-17-15	B.D.C
2	03-18-16	B.D.C

PROJECT No. LB269
DRAWN BY: JP / AM
CHECKED BY: LB
DATE: 06-18-14

STATE OF FLORIDA LEOPOLDO BELLON REGISTERED ARCHITECT 03-18-16

LEOPOLDO BELLON, AIA (AR-8737)

SHEET TITLE
SITE PLAN

SP-1

SHEET OF

ZONING LEGEND (ONE STORY RESIDENCE) 1

ZONING: E-1
NET LOT AREA: 38,768 S.F. (.88 ACRES) 1
HEIGHT (TO RIDGE OF ROOF): 31'-3" (35' MAX. ALLOWED)
LOT COVERAGE (EVERYTHING UNDER ROOF): 8,526 S.F. 1

	MAX. ALLOWED	PROPOSED
	S.F. (22 % OF NET AREA) (8,528 s.f.)	S.F. (22 % OF NET AREA) (8,526 s.f.) 1
SETBACKS:	REQUIRED	PROPOSED
FRONT	50'-0"	51'-8"
SIDE RIGHT	15'-0"	19'-0" 1
SIDE LEFT	15'-0"	15'-0"
REAR	25'-0"	53'-1"

- SITE TO BE FILLED TO COUNTY FLOOD CRITERIA ELEVATION N.G.V.D. OR AN ELEVATION NO LESS THAN THE HIGHEST APPROVED CROWN ELEVATION OF THE ROAD ABUTTING THE PROPERTY.

- AREA ADJACENT TO LAKE OR CANAL TO BE GRADED SO AS TO PREVENT DIRECT OVERLAND DISCHARGE OF STORMWATER INTO LAKE OR CANAL.

- LOT WILL BE GRADED SO AS TO PREVENT DIRECT OVERLAND DISCHARGE OF STORMWATER ONTO ADJACENT PROPERTY. APPLICANT WILL PROVIDE CERTIFICATION PRIOR TO FINAL INSPECTION.

- IN ADDITION TO THE REQUIREMENTS OF THIS PERMIT, THERE MAY BE ADDITIONAL RESTRICTIONS APPLICABLE TO THIS PROPERTY THAT MAY BE FOUND IN THE PUBLIC RECORDS OF THIS COUNTY, SECTION 553.79 (10), FLORIDA STATUTES, EFFECTIVE 7/10/87.

- A SEPARATE PERMIT WILL BE REQUIRED FOR ALL DRIVEWAY APPROACHES. CONTACT PUBLIC WORKS DEPARTMENT.

- THE HEIGHT OF FENCES, WALLS AND HEDGES SHALL NOT EXCEED 2.5 FEET IN HEIGHT WITHIN 10 FEET OF THE EDGE OF ANY DRIVEWAY LEADING TO A RIGHT OF WAY. THE HEIGHT OF FENCES IS BEING MEASURED FROM GRADE. GRADE ELEVATION = ELEVATION OF PUBLIC SIDEWALK OR CROWN OF ROAD.

- O.S.F.H. (OUTSIDE SPECIAL FLOOD HAZARD): ALL ELECTRICAL AND MECHANICAL EQUIPMENT MUST BE LOCATED AT OR ABOVE THE REQUIRED LOWEST FLOOR ELEVATION.

- S.F.H. (SPECIAL FLOOD HAZARD) ALL ELECTRICAL AND MECHANICAL EQUIPMENT MUST BE LOCATED AT OR ABOVE THE BASE FLOOD ELEVATION OR REQUIRED LOWEST FLOOR ELEVATION WHICH EVER IS HIGHER.

- LOWEST FLOOR - Shall mean the lowest floor of the lowest enclosed area (including basement). An unfinished or flood resistant enclosure, usable for parking of vehicles, building access or storage in an area other than a basement area, is not considered a building's lowest floor; provided that such enclosure is not built as to render the structure in violation of the applicable non-elevation design requirements in sections 11c-3,11c-4, 11c-5.

- GARAGE OR STORAGE (FHA, OSHA 11c-5-f): Fully enclosed areas below the base elevations shall be designed to preclude finished living space except allowable uses i.e.parking,limited storage and building access and shall be designed to allow for the entry and exit of flood-waters to automatically equalize hydrostatic flood forces on exterior walls.

Design for complying with this requirement must be either certified by a proffessional engineer or architect and meet the following criteria:

1. Provide a minimum of two (2) openings, having a total net area of not less than one (1) square inch for every square foot of enclosed area size. Bottom of all openings shall be not higher than one (1) foot above grade.
2. The interior portion of such enclosed areas shall NOT be partitioned or finish into separate rooms or air conditioned.

GENERAL NOTES:

1. CONTRACTOR SHALL VERIFY ALL DIMENSIONS AND FIELD CONDITIONS AND NOTIFY ARCHITECT IF ANY DISCREPANCIES BEFORE ANY WORK IS PERFORMED.
2. IN THE EVENT OF ANY ERRORS OR OMISSIONS IN THESE PLANS, ARCHITECT TO BE NOTIFIED AT ONCE.
3. ALL SHOP DRAWINGS TO BE SUBMITTED TO ARCHITECT FOR APPROVAL, PRIOR TO FABRICATION OR INSTALLATION.
4. SEE STRUCTURAL, PLUMBING, AND ELECTRICAL DRAWINGS FOR DETAILS.
5. ALL WORK TO BE IN ACCORDANCE TO THE LATEST COUNTY CODE AND THE SOUTH FLORIDA BUILDING CODE.
6. ELECTRICAL AND PLUMBING CONTRACTORS TO HAVE SEPARATE BUILDING PERMITS.
7. CONCRETE COMPRESSIVE STRENGTH TO BE 2500 PI IN 28 DAYS UNLESS OTHERWISE NOTED.
8. REINFORCING STEEL SHALL CONFORM WITH ASTM A-615 GR. 60 SPECS LATEST REVISIONS.
9. STRUCTURAL STEEL SHALL CONFORM WITH ASTM A-36 LATEST REVISIONS.
10. ALL WOOD IN CONTACT WITH CONCRETE AND MASONRY SHOULD BE PRESSURE TREATED.
11. STRUCTURAL LUMBER SHALL HAVE A MINIMUM BENDING STRESS OF 1200 PSI.
12. DO NOT SCALE DRAWINGS, USE FIGURED DIMENSIONS ONLY.

LEGAL DESCRIPTION :

LOT 2 IN BLOCK 3 OF FARMERS ACRES, ACCORDING TO THE PLAT THEREOF, AS RECORDED IN PLAT BOOK 50 AT PAGE 65 OF THE PUBLIC RECORDS OF MIAMI-DADE COUNTY, FLORIDA.

SOIL STATEMENT :

SOIL AT THIS SITE IS ROCK & SAND ADEQUATE TO SUPPORT THE DESIGN LOAD OF 2000 PSF AFTER EXCAVATION. A SIGNED & SEALED LETTER WILL BE SUBMITTED BY THE ARCHITECT OR THE ENGINEER ATTESTING THAT THE SITE HAS BEEN OBSERVED AND THE FOUNDATION CONDITIONS ARE SIMILAR TO THOSE UPON WHICH THE DESIGN IS BASED ON.

TERMITE SOIL STATEMENT :

ALL BUILDING SHALL HAVE A PRE-CONSTRUCTION TREATMENT PROTECTION AGAINTS SUBTERRANEAN TERMITES. THE RULES AND LAWS AS ESTABLISHED BY THE FLORIDA DEPARTMENT OF AGRICULTURE AND CONSUMER SERVICES SHALL BE DEEMED AS APPROVED WITH RESPECT TO PRECONSTRUCTION SOIL TREATMENT FOR PROTECTION AGAINST SUBTERRANEAN TERMITES. A CERTIFICATE OF COMPLIANCE SHALL BE ISSUED TO THE BUILDING DEPARTMENT BY THE LICENSED PEST CONTROL COMPANY THAT CONTAINS THE FOLLOWING STATEMENT: " THE BUILDING HAS RECEIVED A COMPLETE TREATMENT FOR THE PREVENTION OF SUBTERRANEAN TERMITES. TREATMENT IS IN ACCORDANCE WITH RULES AND LAWS ESTABLISHED BY THE FLORIDA DEPARTMENT OF AGRICULTURE AND CONSUMER SERVICES (AS PER R4409.13.5 FBC 2014)

VIOLATION NOTE:

FAILURE TO MAINTAIN LANDSCAPING ACCORDING TO APPROVED PLANS IS A CODE VIOLATION. FAILURE TO PLANT, PRESERVE, OR MAINTAIN IS A SEPARATE VIOLATION, EACH PLANT, EACH DAY. 18A-13 (C)

* VISIBILITY TRIANGLES NOTE:

ALL TRIANGLES OF VISIBILITY SHALL BE KEPT CLEAR OF VISUAL OBSTRUCTIONS BETWEEN A HEIGHT OF TWO AND A HALF (2.5) FEET AND EIGHT (8) FEET ABOVE THE ESTABLISHED GRADE.

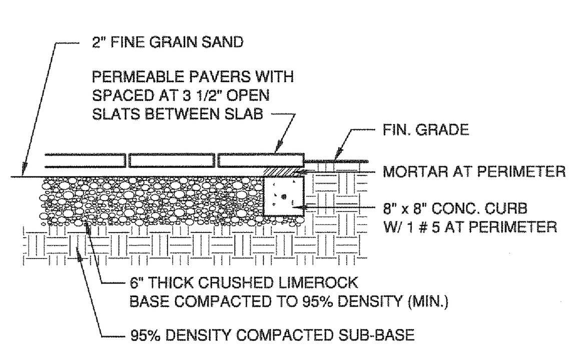

(A) PRECAST CONC. SLAB DETAIL
NTS

FLOOD NOTE:

THE A/C CONDENSING UNITS AND POOL EQUIPMENT, WILL BE AT THE BFE (15.97' NGVD) MINIMUM.

FLOOD LEGEND
Residential New Construction

ADDRESS: 13940 OLD CUTTLER ROAD PALMETTO BAY, FL FOLIO: 33-5023-002-0200

LOT: 2 BLOCK: 3 PLAT BOOK: 50 PAGE: 65

FLOOD ZONE: X BASE FLOOD ELEVATION: -9999

HIGHEST CROWN OF ROAD ELEVATION: 13.97', TAKEN FROM THE ATTACHED CERTIFIED SURVEY, OR A CERTIFIED SURVEY PREPARED BY:

JOSEPH L. MARTIN (SURVEYOR'S NAME) PLS LIC.#: 4368

	LOWEST FLOOR ELEVATION	GARAGE / STORAGE FLOOR ELEVATION	ADJACENT GRADE ELEVATION	LOWEST EQUPMT. ELEV.
REQUIRED	-9999 FT. NGVD	-9999 FT. NGVD	-9999 FT. NGVD	-9999 FT. NGVD
PROPOSED	15.97 FT. NGVD	14.97 FT. NGVD	14.64 FT. NGVD	15.97 FT. NGVD

ALL ELECTRICAL, MECHANICAL AND PLUMBING WILL BE PLACED AT OR ABOVE THE BASE FLOOD ELEVATION. (B.F.E.)

ALL AREAS BELOW B.F.E. SHALL BE PROVIDED WITH A MINIMUM OF TWO (2) OPENINGS, HAVING A TOTAL NET AREA OF NO LESS THAN ONE SQUARE INCH OF OPENING FOR EVERY SQUARE FOOT OF ENCLOSED AREA SUBJECT TO FLOODING. THE BOTTOM OF THE OPENING WILL BE NO HIGHER THAN ONE (1) FOOT ABOVE GRADE AND LOCATED ON DIFFERENT SIDES OF THE ENCLOSED AREA. OPENINGS WILL BE EQUIPPED WITH SCREENS OR LOUVERS. FLOOD RESISTANT MATERIALS WILL BE USED BELOW B.F.E.

THE SITE WILL BE GRADED IN A MANNER TO PREVENT THE FLOODING OF ADJACENT PROPERTIES. WHERE NECESARY INTERCEPTOR SWALES WILL BE CONSTRUCTED ON-SITE WITH NO ENCROACHMENT OVER ADJACENT PROPERTIES.

0'-0"=15.97 NGVD

1

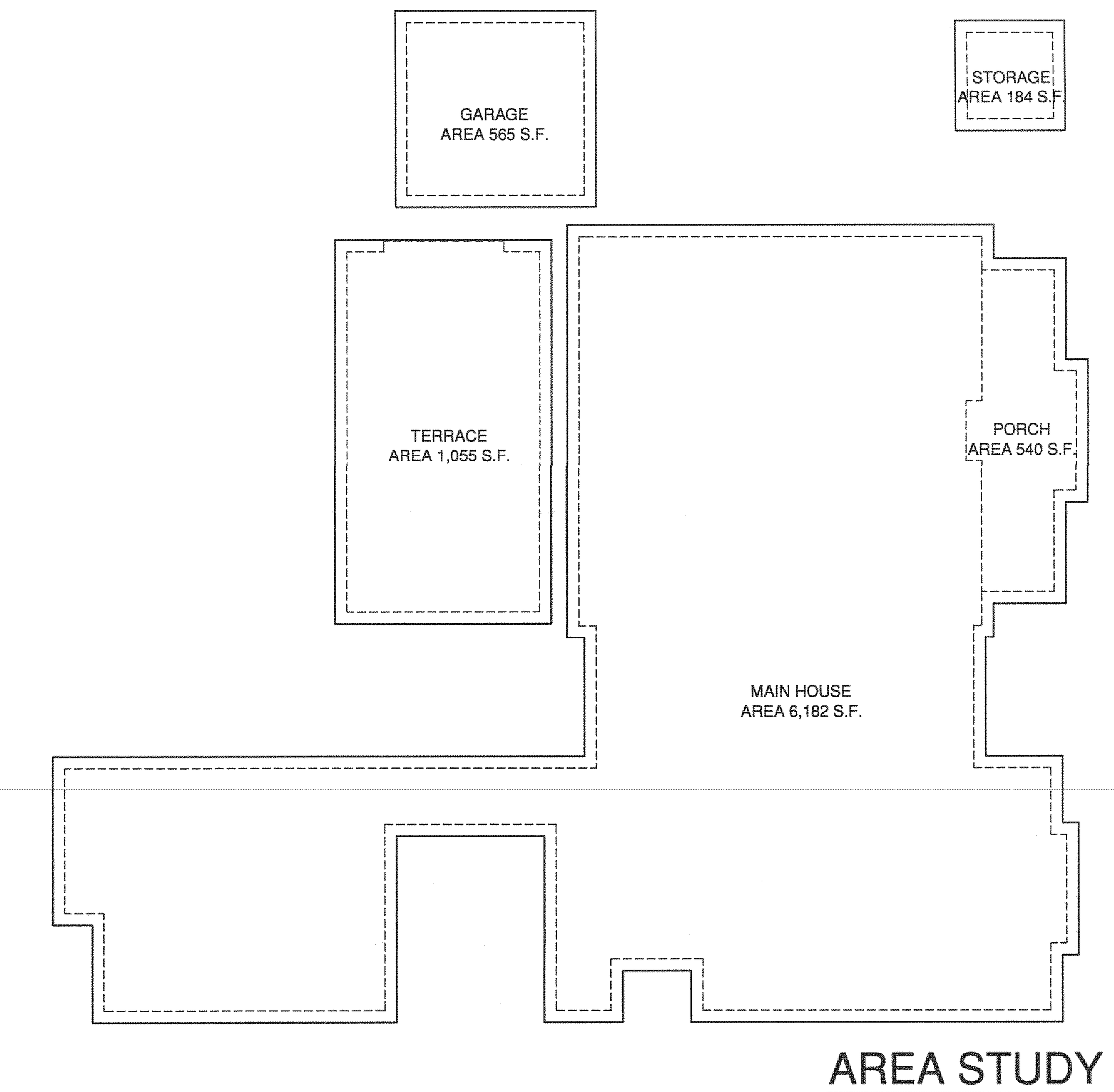

AREA STUDY
SCALE: 1/16 = 1'-0"

AREA BREAKDOWN COMPUTATION			
SPACE	ACTUAL AREA	ROOF OVERHANGS	TOTAL
MAIN HOUSE	5,505 S.F.	677 S.F.	6,182 S.F.
GARAGE	458 S.F.	107 S.F.	565 S.F.
STORAGE	121 S.F.	63 S.F.	184 S.F.
COVERED TERRACE	887 S.F.	168 S.F.	1,055 S.F.
ENTRY PORCH	412 S.F.	128 S.F.	540 S.F.
GRAN TOTAL			8,526 S.F.

1

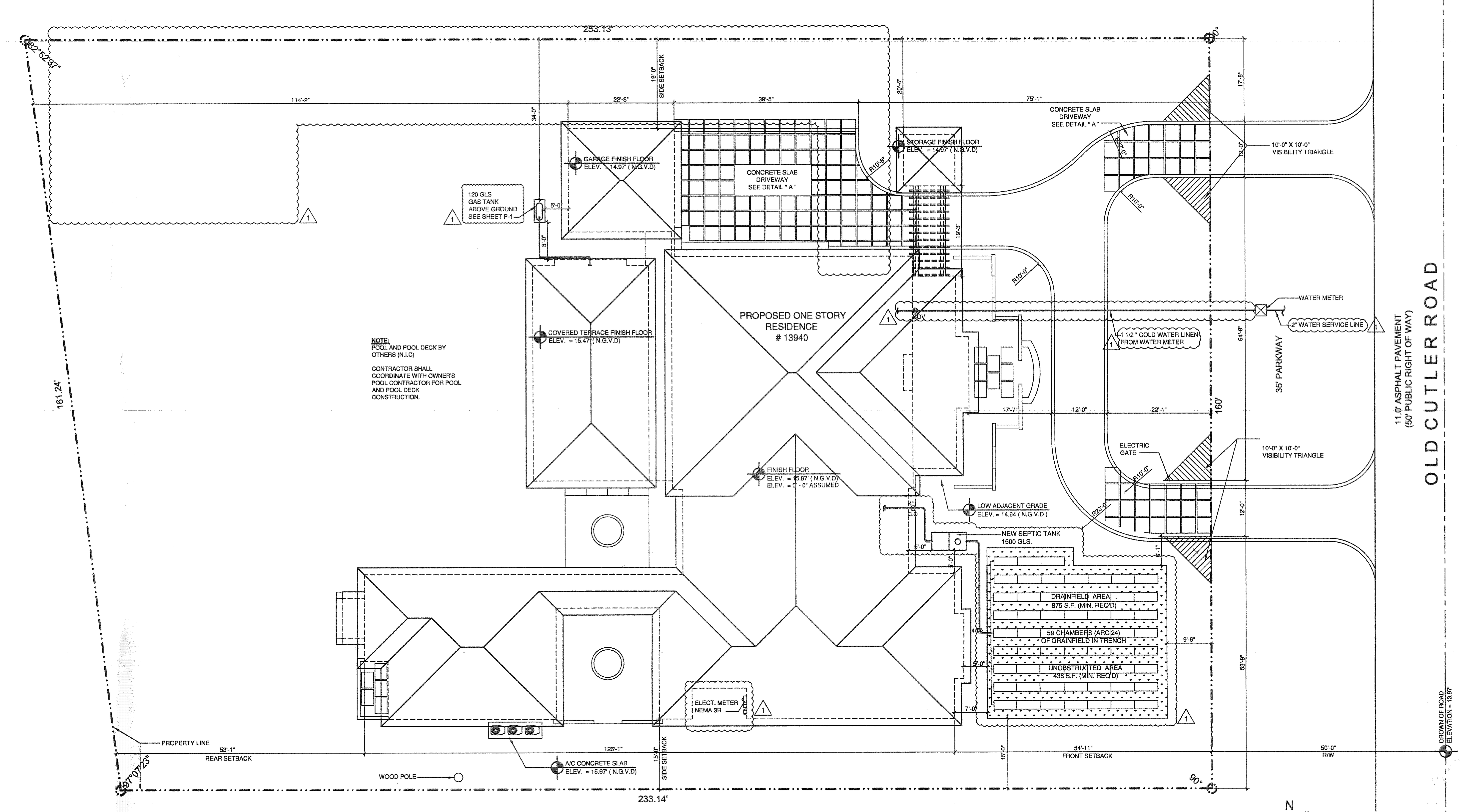

SITE PLAN
SCALE: 1/16 = 1'-0"

N

A CUSTOM RESIDENCE FOR:
Mr. AND MRS. R. SANCHEZ / NOLAN RODRIGUEZ
13940 OLD CUTTLER ROAD
PALMETTO BAY, FLORIDA

BELLÓN architecture
13131 S.W. 132 STREET
SUITE 104
MIAMI, FLORIDA 33186
T. (305) 278-7776
F. (305) 278-7473
WWW.BELLONMILANES.COM
AA-26002616
ARCHITECTURE
LAND PLANNING
INTERIORS
CONSTRUCTION MANAGEMENT

CONSULTANTS

MARK	DATE	DESCRIPTION
1	12-17-15	B.D.C

PROJECT No. LB269
DRAWN BY: JP / AM
CHECKED BY: LB
DATE: 06-18-14

STATE OF FLORIDA LEOPOLDO BELLON ARCHITECT AR0008737

LEOPOLDO BELLON, AIA (AR-8737)

SHEET TITLE
SITE PLAN

SHEET
SP-1
OF

ZONING LEGEND

ZONING: E-1

NET LOT AREA: 38,900 S.F. (.89 ACRES)

HEIGHT (TO RIDGE OF ROOF): 31'-3" (35' MAX. ALLOWED)

LOT COVERAGE (EVERYTHING UNDER ROOF): 7,654 S.F.

	MAX. ALLOWED S.F. (22 % OF NET AREA)	PROPOSED S.F. (22 % OF NET AREA)
	REQUIRED	PROPOSED
SETBACKS: FRONT	50'-0"	51'-8"
SIDE RIGHT	15'-0"	15'-0"
SIDE LEFT	15'-0"	15'-0"
REAR	25'-0"	53'-1"

- SITE TO BE FILLED TO COUNTY FLOOD CRITERIA ELEVATION N.G.V.D. OR AN ELEVATION NO LESS THAN THE HIGHEST APPROVED CROWN ELEVATION OF THE ROAD ABUTTING THE PROPERTY.

- AREA ADJACENT TO LAKE OR CANAL TO BE GRADED SO AS TO PREVENT DIRECT OVERLAND DISCHARGE OF STORMWATER INTO LAKE OR CANAL.

- LOT WILL BE GRADED SO AS TO PREVENT DIRECT OVERLAND DISCHARGE OF STORMWATER ONTO ADJACENT PROPERTY. APPLICANT WILL PROVIDE CERTIFICATION PRIOR TO FINAL INSPECTION.

- IN ADDITION TO THE REQUIREMENTS OF THIS PERMIT, THERE MAY BE ADDITIONAL RESTRICTIONS APPLICABLE TO THIS PROPERTY THAT MAY BE FOUND IN THE PUBLIC RECORDS OF THIS COUNTY, SECTION 553.79 (10), FLORIDA STATUTES, EFFECTIVE 7/10/87.

- A SEPARATE PERMIT WILL BE REQUIRED FOR ALL DRIVEWAY APPROACHES. CONTACT PUBLIC WORKS DEPARTMENT.

- THE HEIGHT OF FENCES, WALLS AND HEDGES SHALL NOT EXCEED 2.5 FEET IN HEIGHT WITHIN 10 FEET OF THE EDGE OF ANY DRIVEWAY LEADING TO A RIGHT OF WAY. THE HEIGHT OF FENCES IS BEING MEASURED FROM GRADE.
GRADE ELEVATION = ELEVATION OF PUBLIC SIDEWALK OR CROWN OF ROAD.

- O.S.F.H. (OUTSIDE SPECIAL FLOOD HAZARD): ALL ELECTRICAL AND MECHANICAL EQUIPMENT MUST BE LOCATED AT OR ABOVE THE REQUIRED LOWEST FLOOR ELEVATION.

- S.F.H. (SPECIAL FLOOD HAZARD) ALL ELECTRICAL AND MECHANICAL EQUIPMENT MUST BE LOCATED AT OR ABOVE THE BASE FLOOD ELEVATION OR REQUIRED LOWEST FLOOR ELEVATION WHICH EVER IS HIGHER.

- LOWEST FLOOR - Shall mean the lowest floor of the lowest enclosed area (including basement). An unfinished or flood resistant enclosure, usable for parking of vehicles, building access or storage in an area other than a basement area, is not considered a building's lowest floor; provided that such enclosure is not built as to render the structure in violation of the applicable non-elevation design requirements in sections 11c-3,11c-4, 11c-5.

- GARAGE OR STORAGE (FHA, OSHA 11c-5-I): Fully enclosed areas below the base elevations shall be designed to preclude finished living space except allowable uses i.e.parking,limited storage and building access and shall be designed to allow for the entry and exit of flood-waters to automatically equalize hydrostatic flood forces on exterior walls.

Design for complying with this requirement must be either certified by a proffessional engineer or architect and meet the following criteria:

1. Provide a minimum of two (2) openings, having a total net area of not less than one (1) square inch for every square foot of enclosed area size. Bottom of all openings shall be not higher than one (1) foot above grade.
2. The interior portion of such enclosed areas shall NOT be partitioned or finish into separate rooms or air conditioned.

GENERAL NOTES:

1. CONTRACTOR SHALL VERIFY ALL DIMENSIONS AND FIELD CONDITIONS AND NOTIFY ARCHITECT IF ANY DISCREPANCIES BEFORE ANY WORK IS PERFORMED.
2. IN THE EVENT OF ANY ERRORS OR OMISSIONS IN THESE PLANS, ARCHITECT TO BE NOTIFIED AT ONCE.
3. ALL SHOP DRAWINGS TO BE SUBMITTED TO ARCHITECT FOR APPROVAL, PRIOR TO FABRICATION OR INSTALLATION.
4. SEE STRUCTURAL, PLUMBING, AND ELECTRICAL DRAWINGS FOR DETAILS.
5. ALL WORK TO BE IN ACCORDANCE TO THE LATEST COUNTY CODE AND THE SOUTH FLORIDA BUILDING CODE.
6. ELECTRICAL AND PLUMBING CONTRACTORS TO HAVE SEPARATE BUILDING PERMITS.
7. CONCRETE COMPRESSIVE STRENGTH TO BE 2500 PI IN 28 DAYS UNLESS OTHERWISE NOTED.
8. REINFORCING STEEL SHALL CONFORM WITH ASTM A-615 GR. 60 SPECS LATEST REVISIONS.
9. STRUCTURAL STEEL SHALL CONFORM WITH ASTM A-36 LATEST REVISIONS.
10. ALL WOOD IN CONTACT WITH CONCRETE AND MASONRY SHOULD BE PRESSURE TREATED.
11. STRUCTURAL LUMBER SHALL HAVE A MINIMUM BENDING STRESS OF 1200 PSI.
12. DO NOT SCALE DRAWINGS, USE FIGURED DIMENSIONS ONLY.

LEGAL DESCRIPTION :

LOT 2 IN BLOCK 3 OF FARMERS ACRES, ACCORDING TO THE PLAT THEREOF, AS RECORDED IN PLAT BOOK 50 AT PAGE 65 OF THE PUBLIC RECORDS OF MIAMI-DADE COUNTY, FLORIDA.

SOIL STATEMENT :

SOIL AT THIS SITE IS ROCK & SAND ADEQUATE TO SUPPORT THE DESIGN LOAD OF 2000 PSF AFTER EXCAVATION. A SIGNED & SEALED LETTER WILL BE SUBMITTED BY THE ARCHITECT OR THE ENGINEER ATTESTING THAT THE SITE HAS BEEN OBSERVED AND THE FOUNDATION CONDITIONS ARE SIMILAR TO THOSE UPON WHICH THE DESIGN IS BASED ON.

TERMITE SOIL STATEMENT :

ALL BUILDING SHALL HAVE A PRE-CONSTRUCTION TREATMENT PROTECTION AGAINTS SUBTERRANEAN TERMITES. THE RULES AND LAWS AS ESTABLISHED BY THE FLORIDA DEPARTMENT OF AGRICULTURE AND CONSUMER SERVICES SHALL BE DEEMED AS APPROVED WITH RESPECT TO PRECONSTRUCTION SOIL TREATMENT FOR PROTECTION AGAINST SUBTERRANEAN TERMITES. A CERTIFICATE OF COMPLIANCE SHALL BE ISSUED TO THE BUILDING DEPARTMENT BY THE LICENSED PEST CONTROL COMPANY THAT CONTAINS THE FOLLOWING STATEMENT: " THE BUILDING HAS RECEIVED A COMPLETE TREATMENT FOR THE PREVENTION OF SUBTERRANEAN TERMITES. TREATMENT IS IN ACCORDANCE WITH RULES AND LAWS ESTABLISHED BY THE FLORIDA DEPARTMENT OF AGRICULTURE AND CONSUMER SERVICES (AS PER R4409.13.5 FBC 2014)

VIOLATION NOTE:

FAILURE TO MAINTAIN LANDSCAPING ACCORDING TO APPROVED PLANS IS A CODE VIOLATION. FAILURE TO PLANT, PRESERVE, OR MAINTAIN IS A SEPARATE VIOLATION, EACH PLANT, EACH DAY. 18A-13 (C)

* VISIBILITY TRIANGLES NOTE:

ALL TRIANGLES OF VISIBILITY SHALL BE KEPT CLEAR OF VISUAL OBSTRUCTIONS BETWEEN A HEIGHT OF TWO AND A HALF (2.5) FEET AND EIGHT (8) FEET ABOVE THE ESTABLISHED GRADE.

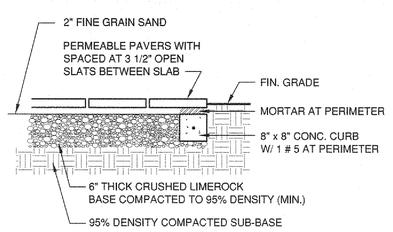

A PRECAST CONC. SLAB DETAIL
NTS

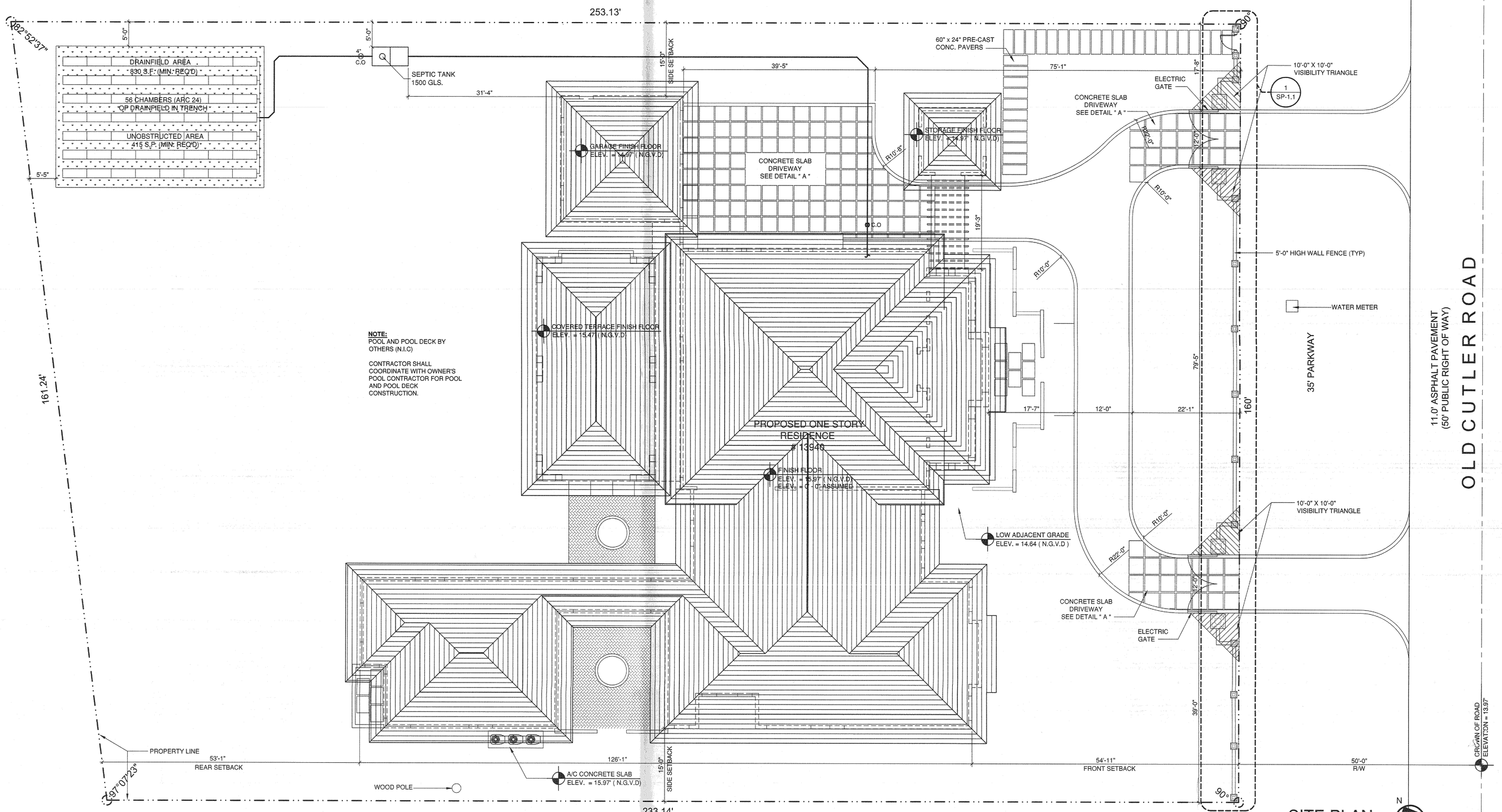

SITE PLAN
SCALE: 1" = 10'-0"

BELLÓN
architecture

13131 S.W. 132 STREET
SUITE 104
MIAMI, FLORIDA 33186

T. (305) 278-7776
F. (305) 278-7473
WWW.BELLONMIAMI.COM
AA-26002616

ARCHITECTURE
LAND PLANNING
INTERIORS
CONSTRUCTION MANAGEMENT

CONSULTANTS

A CUSTOM RESIDENCE FOR:

Mr. AND MRS. R. SANCHEZ / NOLAN RODRIGUEZ

13940 OLD CUTTLER ROAD
PALMETTO BAY, FLORIDA

MARK	DATE	DESCRIPTION

PROJECT No. LB269
DRAWN BY: JP / AM
CHECKED BY: LB
DATE: 06-18-14

STATE OF FLORIDA
LEOPOLDO BELLÓN
AR8737
REGISTERED ARCHITECT

LEOPOLDO BELLÓN, AIA (AR-8737)

SHEET TITLE
SITE PLAN

SP-1

SHEET OF

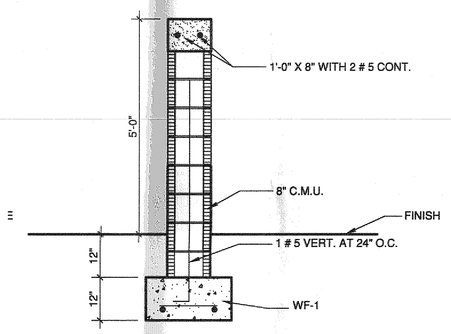

2 FENCE SECTION DETAIL
NTS

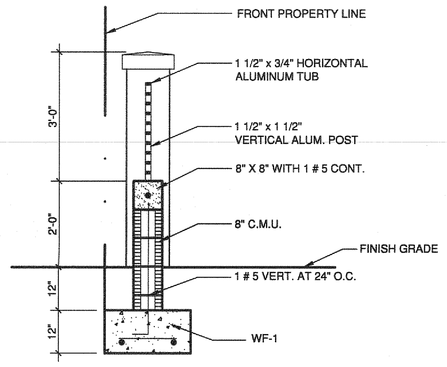

3 SECTION THRU LOW WALL
NTS

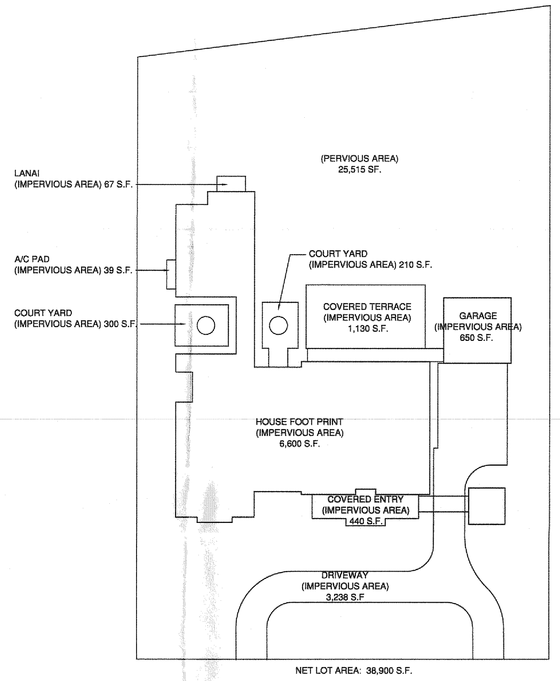

PERVIOUS AND IMPERVIOUS AREA STUDY
NTS

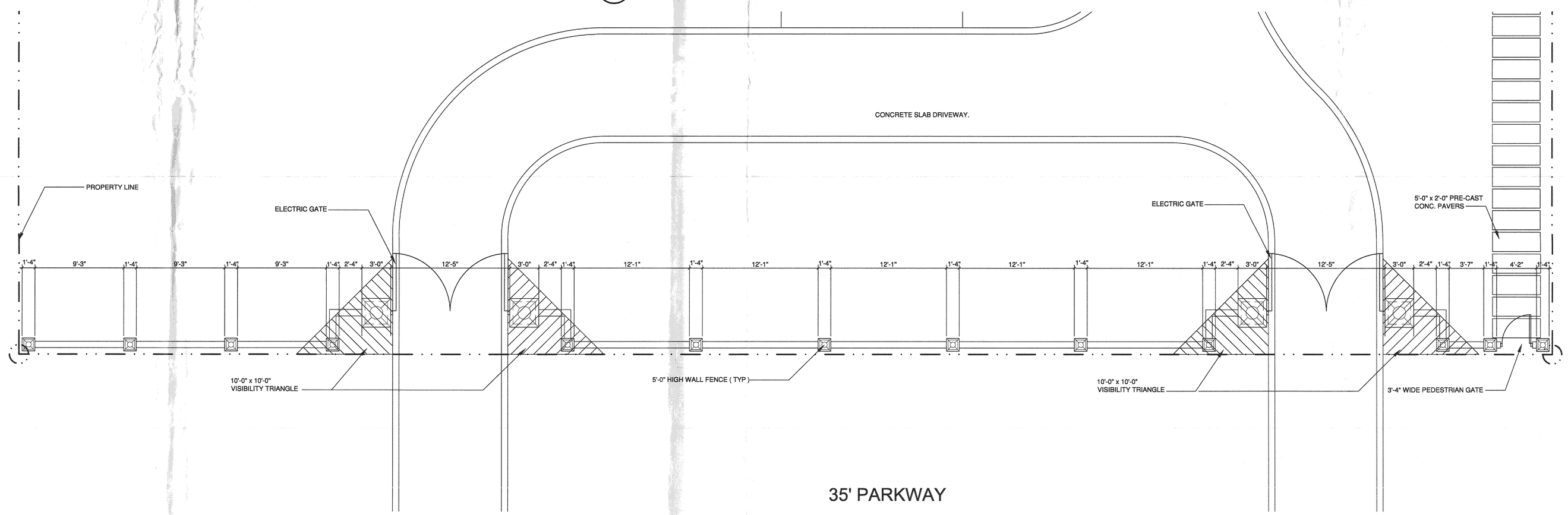

ENTRY WALL FLOOR PLAN
SCALE: 3/16" = 1'-0"

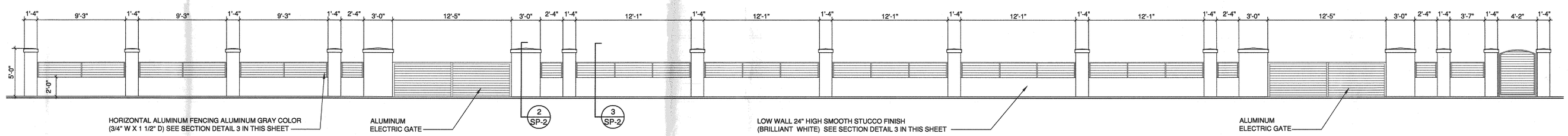

1 ENTRY WALL FENCE
SCALE: 3/16" =1'-0"

BELLON architecture

13131 S.W. 132 STREET
SUITE 104
MIAMI, FLORIDA 33186
T. (305) 278-7776
F. (305) 278-7473
WWW.BELLONMILANES.COM
AA-26002616

ARCHITECTURE
LAND PLANNING
INTERIORS
CONSTRUCTION MANAGEMENT

CONSULTANTS

A CUSTOM RESIDENCE FOR:

Mr. AND MRS. R. SANCHEZ / NOLAN RODRIGUEZ
13940 OLD CUTTLER ROAD
PALMETTO BAY, FLORIDA

MARK	DATE	DESCRIPTION

PROJECT No. LB269
DRAWN BY: JP / AM
CHECKED BY: LB
DATE: 06-18-14

STATE OF FLORIDA · LEOPOLDO BELLON · REGISTERED ARCHITECT

LEOPOLDO BELLON, AIA (AR-5737)

SHEET TITLE
SITE PLAN DETAILS

SP-1.1
SHEET OF

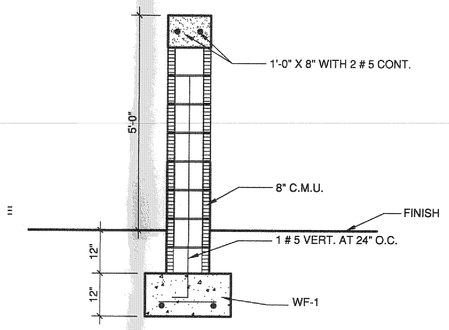

2 FENCE SECTION DETAIL
NTS

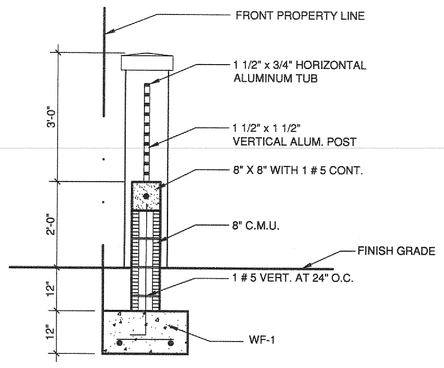

3 SECTION THRU LOW WALL
NTS

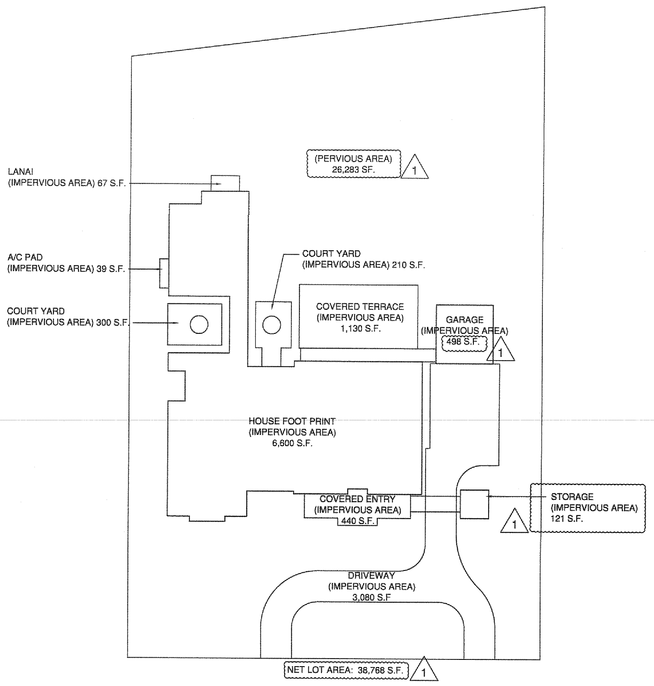

PERVIOUS AND IMPERVIOUS AREA STUDY
NTS

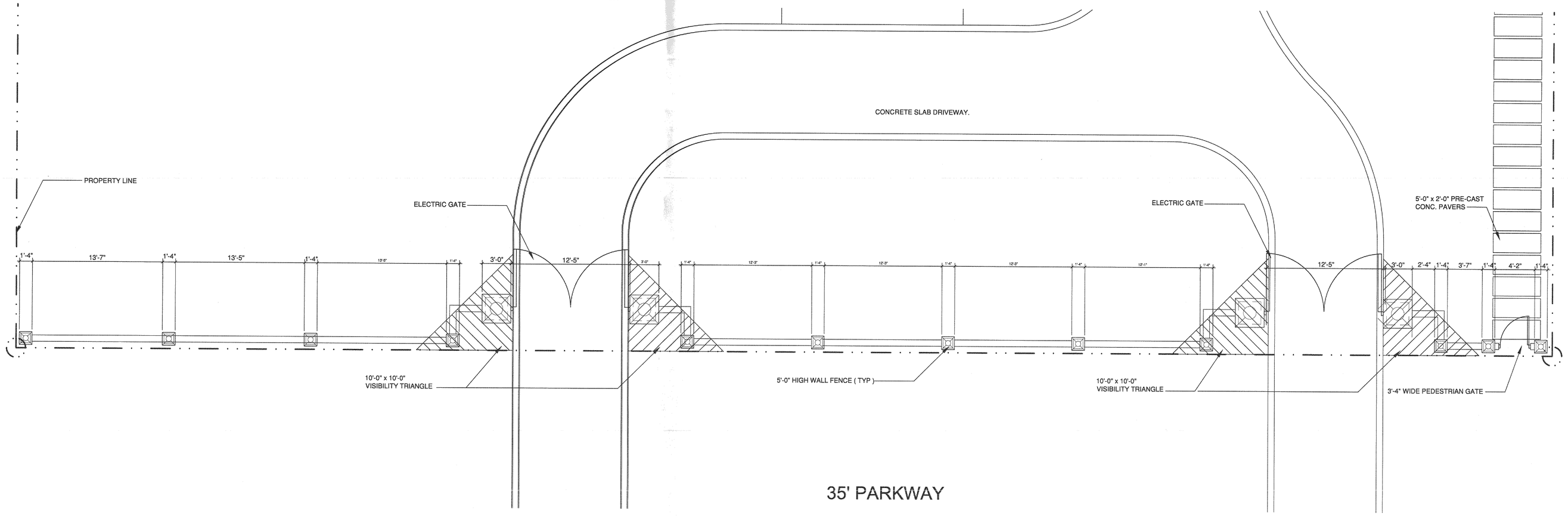

ENTRY WALL FLOOR PLAN
SCALE: 3/16" = 1'-0"
(NOT THIS PERMIT) 1

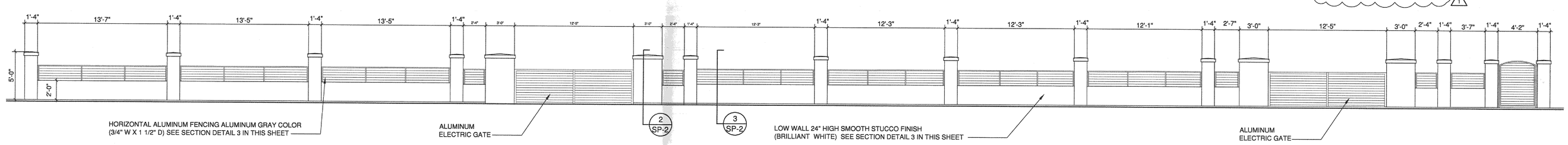

1 ENTRY WALL FENCE
SCALE: 3/16" =1'-0"
(NOT THIS PERMIT) 1

BELLÓN architecture
13131 S.W. 132 STREET
SUITE 104
MIAMI, FLORIDA 33186
T. (305) 278-7776
F. (305) 278-7473
WWW.BELLONMILANES.COM
AA-26002616
ARCHITECTURE
LAND PLANNING
INTERIORS
CONSTRUCTION MANAGEMENT

CONSULTANTS

A CUSTOM RESIDENCE FOR:
Mr. AND MRS. R. SANCHEZ / NOLAN RODRIGUEZ
13940 OLD CUTTLER ROAD
PALMETTO BAY, FLORIDA

MARK	DATE	DESCRIPTION
1	12-15-15	B.D.C

PROJECT No. LB269
DRAWN BY: JP / AM
CHECKED BY: LB
DATE: 06-18-14

STATE OF FLORIDA
LEOPOLDO BELLON
AR0007737

LEOPOLDO BELLON, AIA (AR-8737)

SHEET TITLE
SITE PLAN DETAILS

SP-1.1
SHEET OF

UPD
10-20-15
BLDG DIV

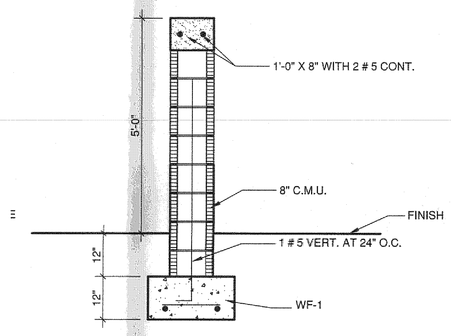

2 FENCE SECTION DETAIL
NTS

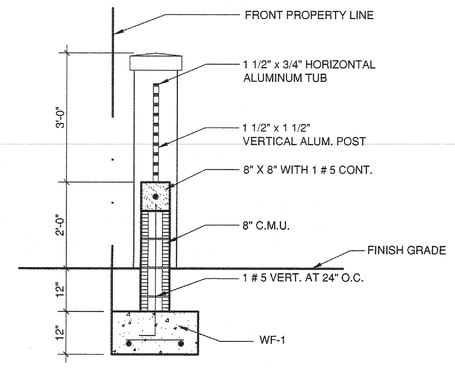

3 SECTION THRU LOW WALL
NTS

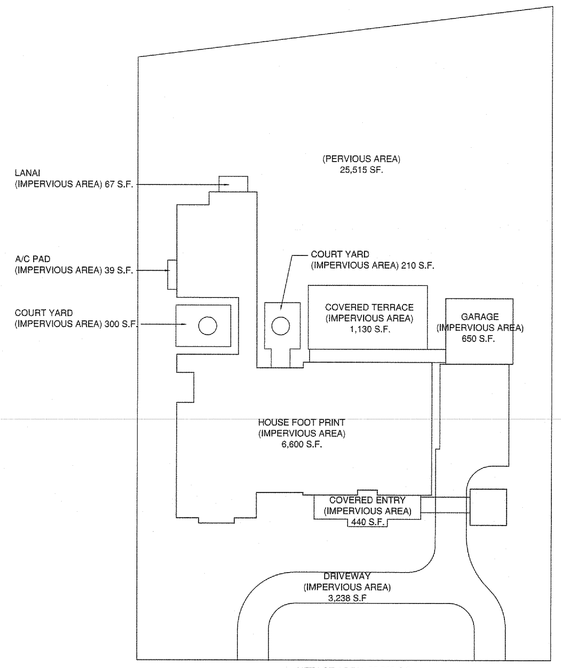

PERVIOUS AND IMPERVIOUS AREA STUDY
NTS

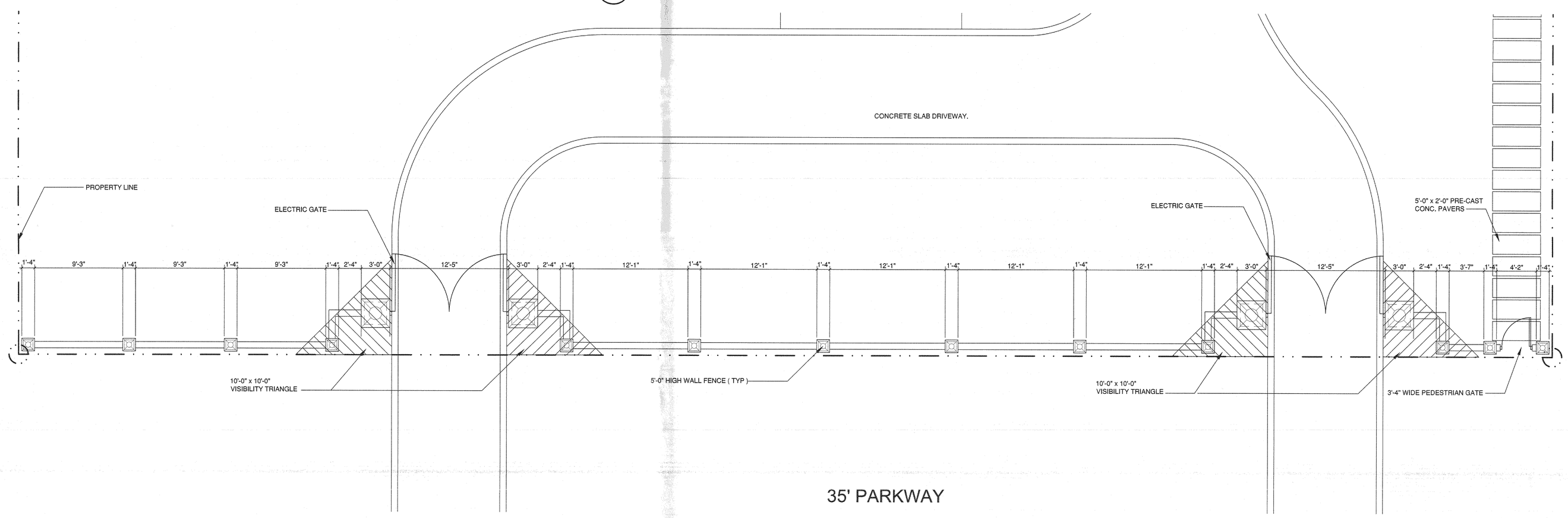

ENTRY WALL FLOOR PLAN
SCALE: 3/16" = 1'-0"

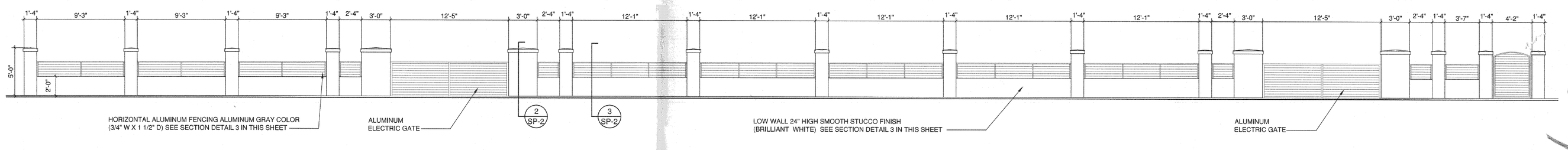

1 ENTRY WALL FENCE
SCALE: 3/16" =1'-0"

BELLÓN
architecture

13131 S.W. 132 STREET
SUITE 104
MIAMI, FLORIDA 33186
T. (305) 278-7776
F. (305) 278-7473
WWW.BELLONMIAMI.COM
AA-26002616

ARCHITECTURE
LAND PLANNING
INTERIORS
CONSTRUCTION MANAGEMENT

CONSULTANTS

A CUSTOM RESIDENCE FOR:
Mr. AND MRS. R. SANCHEZ / NOLAN RODRIGUEZ
13940 OLD CUTTLER ROAD
PALMETTO BAY, FLORIDA

MARK	DATE	DESCRIPTION

PROJECT No. LB269
DRAWN BY: JP / AM
CHECKED BY: LB
DATE: 08-18-14

STATE OF FLORIDA
LEOPOLDO BELLON
AR8737
REGISTERED ARCHITECT

LEOPOLDO BELLON, AIA (AR-8737)

SHEET TITLE
SITE PLAN DETAILS

SP-1.1
SHEET OF

NOTE

ALL PLANT MATERIAL SHALL BE IRRIGATED BY HOSE BIB IF NO SPRINKER SYSTEMS IS PROVIDED HOSE BIB SHALL BE SPACED EVERY 75' O.C. ALONG UNIT AND PROPERTY.

VIOLATION NOTE

FAILURE TO MAINTAIN LANDSCAPING ACCORDING TO APPROVED PLANS IS A CODE VIOLATION. FAILURE TO PLANT, PRESERVE, OR MAINTAIN IS A SEPARATE VIOLATION, EACH PLANT, EACH DAY. 18A-13 (C)

* VISIBILITY TRIANGLES NOTE:

ALL TRIANGLES OF VISIBILITY SHALL BE KEPT CLEAR OF VISUAL OBSTRUCTIONS BETWEEN A HEIGHT OF TWO AND A HALF (2.5) FEET AND EIGHT (8) FEET ABOVE THE ESTABLISHED GRADE.

LANDSCAPE LEGEND

VILLAGE OF PALMETTO BAY LANDSCAPE CODE

ZONING DISTRICT E1

NET LOT AREA 38,768 SQ/FT 0.88 (acres)

	REQ.	PROV.
LANDSCAPE PERVIOUS AREA (if applicable)	45% MIN. 17,445 SQ/FT	67.8% 26,283 SQ/FT
MAXIMUM LAWN AREA (50 %)	N/A	N/A
TREES	18	13 (existing to remain) 5 NEW

TREES PER ACRES (NOTE:30%OF REQUIRED TREES AND/OR PALMS SHALL BE NATIVE SPECIES.

NO MORE THAN 20% OF THE NATIVE TREE REQUIRED SHALL BE SABAL PALMETTO (CABBAGE PALM)

	REQ.	PROV.
STREET TREES	3	3

(TREES IN THE RIGTH OF WAY(*) OR ON PRIVATE PROPERTY)* WILL REQUIRE PUBLIC WORKS APPROVAL OR SPECIAL TAXING DISTRICT.

TOTAL NUMBER OF TREES	21	21
SHRUBS(10 SHRUBS FOR EA.TREE REQUIRED)	210	210

*30% SHRUBS/HEDGES SHALL BE NATIVE SPECIES.

*IRRIGATION SYSTEM REQUIRED PURSUANT TO PALMETTO BAY ZONING CODE CHAPTER 30

MATERIAL LIST (TREES & SHRUBS)

QUAN.	KEY	BOTANICAL NAME/COMMON NAME	HEIGHT/SPREAD		CALIPER
2	A	QUERCUS VIRGINIANA / LIVE OAK	15'	10'	10"
1	B	SWETENIA MAHOGANY / MAHOGANY	10'	7'	8'
2	C	ROYAL PALM	20'	15'	20'

		SHRUB LEGEND	
105	1	CHRYSOBALANUS/RED TIP COCOPLUM	3 GAL. @ 30" O.C.
105	2	IXORA MAUI / IXORA	3 GAL. @ 24" O.C.

EXISTING TREES LEGEND

TREE IDENTIFICATION	SPECIE	DIAMETER	CANOPY	HEIGHT	REMARK
1 - 2	MAHOGANY	1.0'	30'	25'	REMAIN
3	MAHOGANY	1.0'	30'	25'	REMAIN
4	GUMBO LIMBO	1.0'	30'	20'	REMOVED
5 - 6	COCONUT PALM	1.0'	20'	30'	REMOVED
7	PALM	1.0'	15'	40'	REMOVED
8	PALM	1.0'	15'	30'	REMOVED
9	AVOCADO	0.7'	30'	20'	REMOVED
10	GUMBO LIMBO	1.1'	40'	25'	REMOVED
11	OAK	1.2'	50'	30'	REMAIN
12	OAK	0.9'	20'	20'	REMOVED
13	AVOCADO	1.1'	40'	30'	REMOVED
14 - 15	QUEEN PALM	0.6'	20'	20'	REMOVED
16	MANGO	0.8'	30'	25'	REMAIN
17	GUMBO LIMBO	1.0'	40'	25'	REMAIN
18	GUMBO LIMBO	1.0'	40'	30'	REMAIN
19	AVOCADO	1.3'	40'	30'	REMAIN
20	MANGO	1.0'	30'	30'	REMAIN
21	OAK	1.4'	20'	40'	REMAIN
22	MANGO	1.0'	40'	30'	REMAIN
23	MANGO	0.8'	20'	20'	REMOVED
24	ROYAL PALM	1.0'	20'	30'	REMAIN
25	GUMBO LIMBO	1.0'	30'	30'	REMAIN

LANDSCAPE NOTES

1. IRRIGATION SYSTEM
PROVIDE AN IRRIGATION SYSTEM TO BE OPERATED WITH A TIMER AND TO COVER ALL LANDSCAPED AREAS WITHIN PROPERTY LINE. IRRIGATION SYSTEM SHALL BE DESIGNED TO ALLOW DIFFERENTIAL OPERATION SCHEDULES FOR HIGH AND LOW WATER REQUIREMENT AREAS. PLUMBING CODE, 2010 EDITION,(APPENDIX F)

2. TREE SIZE. ALL TREES, EXCEPT STREET TREES, SHALL BE A MINIMUM OF TEN (10)FEET HIGH AND HAVE A MINIMUM DIAMETER AT BREAST HEIGHT(DBH) OF TWO (2) INCHES AT THE TIME OF PLANTING EXCEPT THAT THIRTY (30) PERCENT OF THE THREE REQUIREMENT MAY BE MET BY NATIVE SPECIES WITH A MINIMUM HEIGHT OF EIGHT (8) FEET AND A MINIMUM DBH OF ONE ANDONE-HALF (1 1/2) INCHES AT TIME OF PLANTING.

3. STREET TREE SIZE AND SPACING. STREET TREES SHALL HAVE A CLEAR TRUNK OF FOUR (4) FEET, AN OVERALL HEIGHT OF TWELVE (12) FEET AND A MINIMUM DBH OF TWO (2) INCHES AT TIME OF PLANTING AND SHALL BE PROVIDED ALONG ALL ROADWAYS AT A MAXIMUM AVERAGE SPACING OF THIRTY-FIVE (35) FEET O/C. WHERE TREES ARE PLANTED ON PRIVATE PROPERTY, THEY SHALL BE PLACED WITHIN SEVEN (7) FEET OF THE EDGE OF THE DEDICATED RIGHT-OF-WAY OR WITHIN SEVEN (7) FEET OF THE EDGE OF THE ROADWAY AND/OR INSIDE EDGE OF A SIDEWALK ON PRIVATE ROADS.

4. NATIVE SPECIES. THIRTY (30) PERCENT OF THE REQUIRED TREES AND /OR PALMS SHALL BE NATIVE SPECIES.

5. PALMETTO. NO MORE THAN TWENTY (20) PERCENT OF THE NATIVE TREE REQUIREMENTS SHALL BE SABAL PALMETTO (CABBAGE) PALM.

6. SHRUBS. SHALL BE A MINIMUM OF EIGHTEEN (18) INCHES IN HEIGHT WHEN MEASURED IMMEDIATELY AFTER PLANTING HEDGES. WHERE REQUIRED, SHALL BE PAINTED AT A MAXIMUM SPACING OF THIRTY (30) INCHES O.C., AND MAINTAINED SO AS TO FORM A CONTINUOUS,UNBROKEN AND SOIL VISUAL SCREEN WITHING A MAXIMUM OF ONE (1) YEAR AFTER TIME OF PLANTING.

7. PLANT QUALITY: PLANTS INSTALLED PURSUANT TO THIS CODE SHALL CONFORM TO, OR EXCEED, THE MINIMUM STANDARDS FOR FLORIDA NUMBER ONE AS PROVIDED IN THE MOST CURRENT EDITION OF "GRADES AND STANDARDS FOR NURSERY PLANTS PART I AND II," PREPARED BY THE STATES OF FLORIDA DEPARTMENT OF AGRICULTURE AND CONSUMER SERVICE.

8. THE LANDSCAPE CONTRACTOR IS TO LOCATE AND VERIFY ALL UNDERGROUND AND OVERHEAD UTILITIES PRIOR TO BEGINNING WORK. CONTACT PROPER UTILITY COMPANIES AND/OR GENERAL CONTRACTOR PRIOR TO DIXGGING FOR FIELD VERIFICATION. THE OWNER AND THE LANDSCAPE ARCHITECT SHALL NOT BE RESPONSIBLE FOR ANY DAMAGES TO UTILITY OR IRRIGATION LINES.

9. LANDSCAPE CONTRACTOR IS TO VERIFY ALL CURRENT DRAWINGS AND CHECK FOR DISCREPANCIES AND BRING TO THE ATTENTION OF THE LANDSCAPE ARCHITECT PRIOR TO COMMENCING WITH THE WORK.

10. ALL UNATTENDED AND UNPLANTED TREES PITS ARE TO BE PROPERTY BARRICADED AND FLAGGED DURING INSTALLATION.

11. ALL PLANTING PLANS ARE ISSUED AS DIRECTIVES FOR SITE LAYOUT, ANY DEVIATIONS, SITE CHANGES, ETCETERA, ARE TO BE BROUGHT TO THE ATTENTION OF THE LANDSCAPE ARCHITECT FOR CLARIFICATION PRIOR TO INSTALLATION.

TERMITE SOIL STATEMENT

ALL BUILDING SHALL HAVE A PRE-CONSTRUCTION TREATMENT PROTECTION AGAINTS SUBTERRANEAN TERMITES. THE RULES AND LAWS AS ESTABLISHED BY THE FLORIDA DEPARTMENT OF AGRICULTURE AND CONSUMER SERVICES SHALL BE DEEMED AS APPROVED WITH RESPECT TO PRECONSTRUCTION SOIL TREATMENT FOR PROTECTION AGAINST SUBTERRANEAN TERMITES. A CERTIFICATE OF COMPLIANCE SHALL BE ISSUED TO THE BUILDING DEPARTMENT BY THE LICENSED PEST CONTROL COMPANY THAT CONTAINS THE FOLLOWING STATEMENT: " THE BUILDING HAS RECEIVED A COMPLETE TREATMENT FOR THE PREVENTION OF SUBTERRANEAN TERMITES. TREATMENT IS IN ACCORDANCE WITH RULES AND LAWS ESTABLISHED BY THE FLORIDA DEPARTMENT OF AGRICULTURE AND CONSUMER SERVICES (AS PER R4409.13.5 FBC 2014)

PLANTING NOTES

1. ALL PLANT MATERIAL IS TO BE FLORIDA No.1 OR BETTER PURSUANT TO THE FLORIDA DEPARTMENT OF AGRICULTURE'S GRADES AND STANDARDS FOR NURSERY PLANTS.
2. -SOD IS TO BE GRADE "A" WEI FREE.
3. -ALL AREAS MARKED "LAWN" SHALL BE SOLID SODDED WITH ST. AUGUSTINE "FLORATAM" SOLID SOD. SEE LIMIT ON PLANS.
   -ALL AREAS MARKED "BAHIA GRASS" SHALL BE SOLID SODDED WITHPASPALUM NOTATUM.
   -ALL SOD IS TO BE LAID LEVEL, TIGHT, AND CUT EVEN ALONG PLANTING BEDS.
4. -ALL PLANTS ARE TO BE TOP DRESSED WITH A MINIMUM 3"LAYER OFMELALUCA MULCH, EUCALYPTUS MULCH OR EQUAL.
5. -PLANTING PLANS SHALL TAKE PRECEDENCE OVER PLANT LIST IN CASE OF DISCREPANCIES.
6. -NO CHANGES ARE TO BE MADE WITHOUT THE PRIOR CONSENT OF THE LANDSCAPE ARCHITECT AND OWNER. ADDITIONS AND/OR DELETIONS TO THE PLANT MATERIAL MUST BE APPROVED BY THE PROJECT ENGINEER.
7. -LANDSCAPE CONTRACTOR IS RESPONSIBLE FOR PROVIDING THEIR OWN SQUARE FOOTAGE TAKE OFFS AND FIELD VERIFICATIONS FOR 100% SOD COVERAGE FOR ALL AREAS SPECIFIED.
8. -ALL LANDSCAPE AREAS ARE TO BE PROVIDED WITH AUTOMATIC SPRINKLER SYSTEM WHICH PROVIDES 100% COVERAGE, AND 50% OVERLAP.
9. -ALL TREES IN LAWN AREAS TO RECEIVE A 24' DIAMETER MULCHED SAUCER AT THE BASE OF THE TRUNK.
10. -ALL LAWN LOCATED IN PARKING ISLANDS IS TO BE SET FLUSH WITH TOP OF CURB. PROVIDE ADEQUATE SOIL WITHIN 3" OF TOP OF CURB.
11. -TREES ARE TO BE PLANTED WITHIN PARKING ISLANDS AFTER SOIL IS BROUGHT UP TO GRADE. DEEPLY SET ROOT BALLS ARE NOT ACCEPTABLE.
12. -PLANTING SOIL FOR TOPSOIL AND BLACKFILL SHALL BE 50/50 MIX, NEMATODE FREE BY MORRIS MAGIC SOIL, HIALEAH, FLORIDA.PLANTING SOIL FOR ANNUAL BEDS TO BE COMPRISED OF 50% CANADIAN PEAT MOSES, 25% SALT FREE COARSE SAND AND 25% AERLITE.
13. -TREE AND SHRUB PITS WILL BE SUPPLEMENTED WITH "AGRIFORM PELLS", 21 GRAM SIZE WITH A 20-10-5 ANALYSIS, OR SUBSTITUTE APPLICATION.

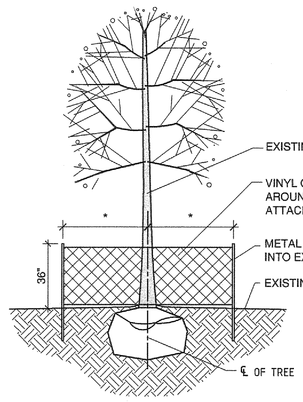

EXISTING TREE BARRIER DETAIL SECTION
TO PROTECTS TREE DURING CONSTRUCTION N.T.S.

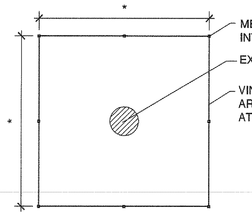

* "X" DIMENSION AS FOLLOWS=
6- 8' FOR TREE TRUNKS UNDER 18" DIA.
10'-12' FOR TREE TRUNKS GREATER THAN 18" DIA.

EXISTING TREE BARRIER DETAIL - PLAN VIEW DETAIL
TREE PROTECTION DURING CONSTRUCTION N.T.S.

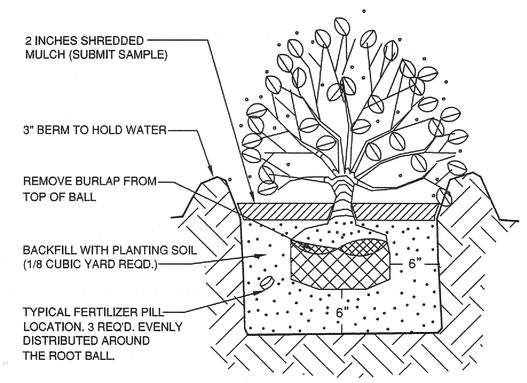

SHRUB PLANTING DETAIL

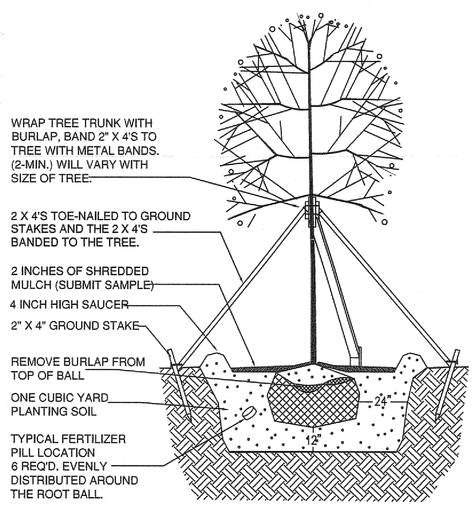

TREE PLANTING DETAIL
N.T.S.

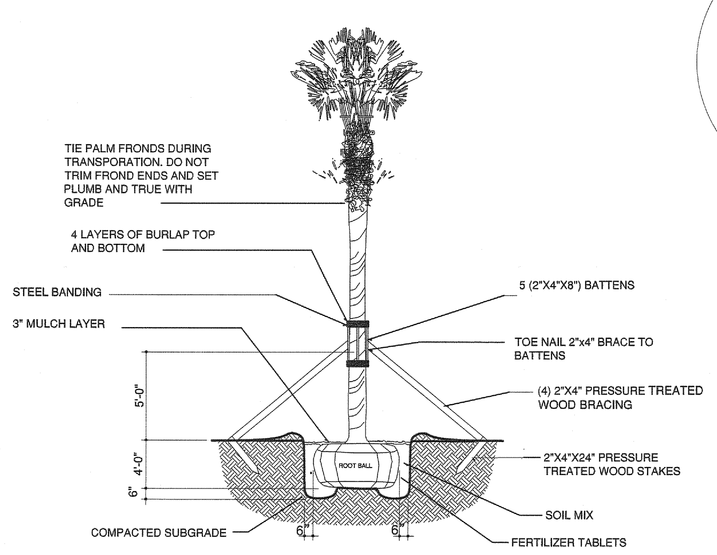

PALM PLANTING DETAIL

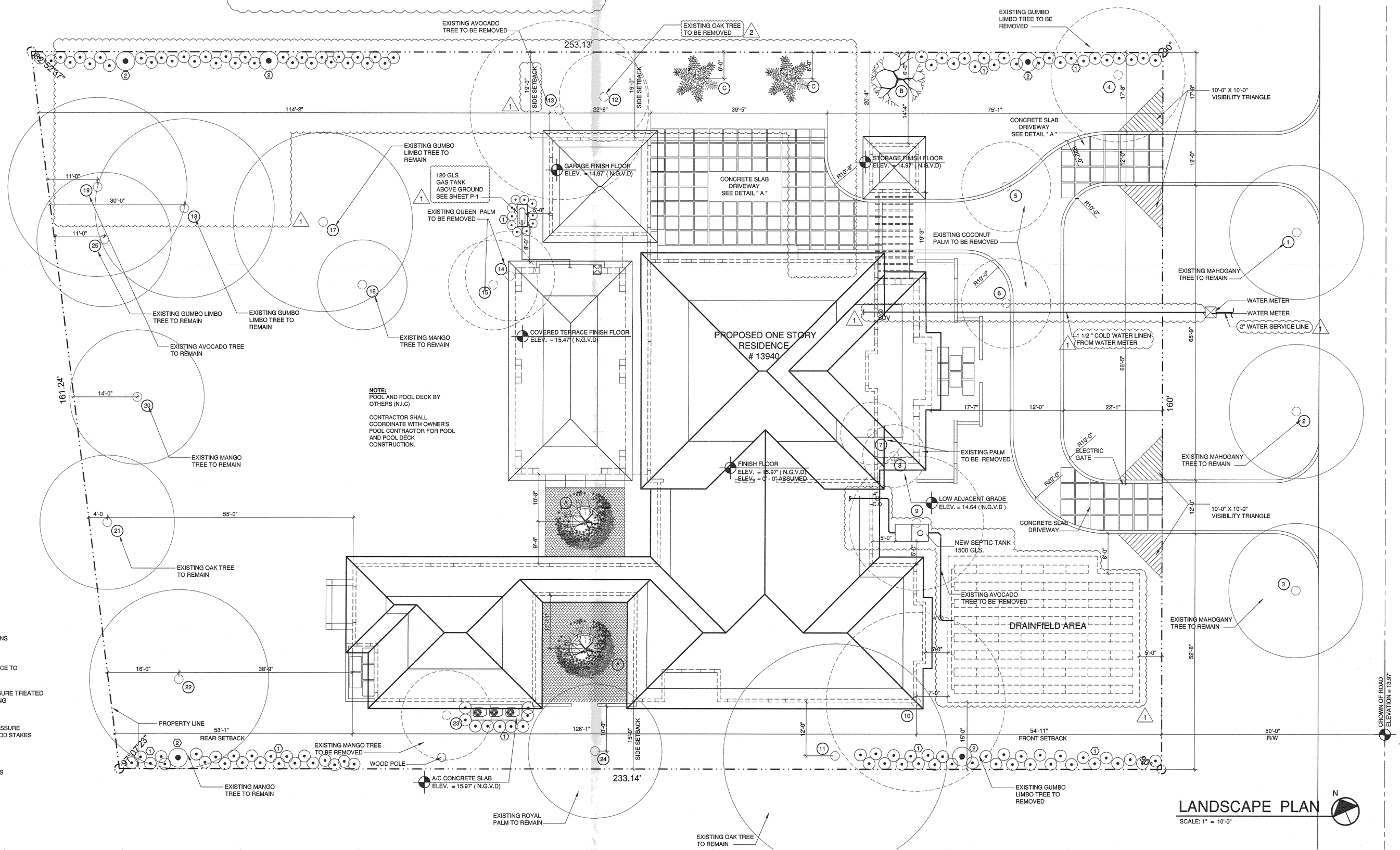

LANDSCAPE PLAN
SCALE: 1" = 10'-0"

BELLÓN architecture
13131 S.W. 132 STREET
SUITE 104
MIAMI, FLORIDA 33186
T. (305) 278-7776
F. (305) 278-7473
WWW.BELLONMIAMI25.COM
AA-26002616
ARCHITECTURE
LAND PLANNING
INTERIORS
CONSTRUCTION MANAGEMENT
CONSULTANTS

A CUSTOM RESIDENCE FOR:
Mr. AND MRS. R. SANCHEZ / NOLAN RODRIGUEZ
13940 OLD CUTTLER ROAD
PALMETTO BAY, FLORIDA

MARK	DATE	DESCRIPTION
1	12-17-15	B.D.C
2	03-18-16	B.D.C

PROJECT No.	LB269
DRAWN BY:	JP / AM
CHECKED BY:	LB
DATE:	06-18-14

STATE OF FLORIDA LEOPOLDO BELLON 03-18-16 REGISTERED ARCHITECT

LEOPOLDO BELLON, AIA (AR-9737)

SHEET TITLE
LANDSCAPE PLAN

LP-1
SHEET OF

LANDSCAPE LEGEND

VILLAGE OF PALMETTO BAY LANDSCAPE CODE

	REQ.	PROV.
ZONING DISTRICT: E1		
NET LOT AREA 38,768 SQ/FT 0.88 (acres)		
LANDSCAPE PERVIOUS AREA (if applicable)	30% MIN. 11,630 SQ/FT	67.8% 26,283 SQ/FT
MAXIMUM LAWN AREA (50 %)	N/A	N/A
TREES	18	13 (existing to remain) 5 NEW
TREES PER LOT (NOTE:30%OF REQUIRED TREES AND/OR PALMS SHALL BE NATIVE SPECIES.		
NO MORE THAN 20% OF THE NATIVE TREE REQUIRED SHALL BE SABAL PALMETTO (CABBAGE PALM)		
STREET TREES	3	3
(TREES IN THE RIGTH OF WAY(*) OR ON PRIVATE PROPERTY)* WILL REQUIRE PUBLIC WORKS APPROVAL OR SPECIAL TAXING DISTRICT.		
TOTAL NUMBER OF TREES	21	21
SHRUBS(10 SHRUBS FOR EA.TREE REQUIRED)	210	210

*30% SHRUBS/HEDGES SHALL BE NATIVE SPECIES.
*IRRIGATION SYSTEM REQUIRED PURSUANT TO CHAPTER 33 DADE COUNTY

NOTE

ALL PLANT MATERIAL SHALL BE IRRIGATED BY HOSE BIB IF NO SPRINKER SYSTEMS IS PROVIDED HOSE BIB SHALL BE SPACED EVERY 75' O.C. ALONG UNIT AND PROPERTY.

VIOLATION NOTE

FAILURE TO MAINTAIN LANDSCAPING ACCORDING TO APPROVED PLANS IS A CODE VIOLATION. FAILURE TO PLANT, PRESERVE, OR MAINTAIN IS A SEPARATE VIOLATION, EACH PLANT, EACH DAY. 18A-13 (C)

* VISIBILITY TRIANGLES NOTE:

ALL TRIANGLES OF VISIBILITY SHALL BE KEPT CLEAR OF VISUAL OBSTRUCTIONS BETWEEN A HEIGHT OF TWO AND A HALF (2.5) FEET AND EIGHT (8) FEET ABOVE THE ESTABLISHED GRADE.

MATERIAL LIST (TREES & SHRUBS)

QUAN.	KEY	BOTANICAL NAME/COMMON NAME	HEIGHT/SPREAD		CALIPER
2	A	QUERCUS VIRGINIANA / LIVE OAK	15'	10'	10"
1	B	SWETENIA MAHOGANY / MAHOGANY	10'	7'	8'
2	C	ROYAL PALM	20'	15'	20'

SHRUB LEGEND

QUAN.	KEY	BOTANICAL NAME/COMMON NAME	SIZE
105	1	CHRYSOBALANUS/RED TIP COCOPLUM	3 GAL. @ 30" O.C.
105	2	IXORA MAUI / IXORA	3 GAL. @ 24" O.C.

EXISTING TREES LEGEND

TREE IDENTIFICATION	SPECIE	DIAMETER	CANOPY	HEIGHT	REMARK
1 - 2	MAHOGANY	1.0'	30'	25'	REMAIN
3	MAHOGANY	1.0'	30'	25'	REMAIN
4	GUMBO LIMBO	1.0'	30'	20'	REMOVED
5 - 6	COCONUT PALM	1.0'	20'	30'	REMOVED
7	PALM	1.0'	15'	40'	REMOVED
8	PALM	1.0'	15'	30'	REMOVED
9	AVOCADO	0.7'	30'	20'	REMOVED
10	GUMBO LIMBO	1.1'	40'	25'	REMOVED
11	OAK	1.2'	50'	30'	REMAIN
12	OAK	0.9'	20'	20'	RELOCATED
13	AVOCADO	1.1'	40'	30'	REMOVED
14 - 15	QUEEN PALM	0.6'	20'	20'	REMOVED
16	MANGO	0.8'	30'	25'	REMAIN
17	GUMBO LIMBO	1.0'	40'	25'	REMAIN
18	GUMBO LIMBO	1.0'	40'	30'	REMAIN
19	AVOCADO	1.3'	40'	30'	REMAIN
20	MANGO	1.0'	30'	30'	REMAIN
21	OAK	1.4'	20'	40'	REMAIN
22	MANGO	1.0'	40'	30'	REMAIN
23	MANGO	0.8'	20'	20'	REMOVED
24	ROYAL PALM	1.0'	20'	30'	REMAIN
25	GUMBO LIMBO	1.0'	30'	30'	REMAIN

LANDSCAPE NOTES

1. IRRIGATION SYSTEM. PROVIDE AN IRRIGATION SYSTEM TO BE OPERATED WITH A TIMER AND TO COVER ALL LANDSCAPED AREAS WITHIN PROPERTY LINE. IRRIGATION SYSTEM SHALL BE DESIGNED TO ALLOW DIFFERENTIAL OPERATION SCHEDULES FOR HIGH AND LOW WATER REQUIREMENT AREAS. PLUMBING CODE, 2010 EDITION,(APPENDIX F)
2. TREE SIZE. ALL TREES, EXCEPT STREET TREES, SHALL BE A MINIMUM OF TEN (10)FEET HIGH AND HAVE A MINIMUM DIAMETER AT BREAST HEIGHT(DBH) OF TWO (2) INCHES AT THE TIME OF PLANTING EXCEPT THAT THIRTY (30) PERCENT OF THE THREE REQUIREMENT MAY BE MET BY NATIVE SPECIES WITH A MINIMUM HEIGHT OF EIGHT (8) FEET AND A MINIMUM DBH OF ONE ANDONE-HALF (1 1/2) INCHES AT TIME OF PLANTING.
3. STREET TREE SIZE AND SPACING. STREET TREES SHALL HAVE A CLEAR TRUNK OF FOUR (4) FEET, AN OVERALL HEIGHT OF TWELVE (12) FEET AND A MINIMUM DBH OF TWO (2) INCHES AT TIME OF PLANTING AND SHALL BE PROVIDED ALONG ALL ROADWAYS AT A MAXIMUM AVERAGE SPACING OF THIRTY-FIVE (35) FEET O/C. WHERE TREES ARE PLANTED ON PRIVATE PROPERTY, THEY SHALL BE PLACED WITHIN SEVEN (7) FEET OF THE EDGE OF THE DEDICATED RIGHT-OF-WAY OR WITHIN SEVEN (7) FEET OF THE EDGE OF THE ROADWAY AND/OR INSIDE EDGE OF A SIDEWALK ON PRIVATE ROADS.
4. NATIVE SPECIES. THIRTY (30) PERCENT OF THE REQUIRED TREES AND /OR PALMS SHALL BE NATIVE SPECIES.
5. PALMETTO. NO MORE THAN TWENTY (20) PERCENT OF THE NATIVE TREE REQUIREMENTS SHALL BE SABAL PALMETTO (CABBAGE) PALM.
6. SHRUBS. SHALL BE A MINIMUM OF EIGHTEEN (18) INCHES IN HEIGHT WHEN MEASURED IMMEDIATELY AFTER PLANTING HEDGES, WHERE REQUIRED, SHALL BE PAINTED AT A MAXIMUM SPACING OF THIRTY (30) INCHES O.C., AND MAINTAINED SO AS TO FORM A CONTINUOUS,UNBROKEN AND SOIL VISUAL SCREEN WITHING A MAXIMUM OF ONE (1) YEAR AFTER TIME OF PLANTING.
7. PLANT QUALITY: PLANTS INSTALLED PURSUANT TO THIS CODE SHALL CONFORM TO, OR EXCEED, THE MINIMUM STANDARD FOR FLORIDA NUMBER ONE AS PROVIDED IN THE MOST CURRENT EDITION OF "GRADES AND STANDARDS FOR NURSERY PLANTS PART 1 AND 11," PREPARED BY THE STATES OF FLORIDA DEPARTMENT OF AGRICULTURE AND CONSUMER SERVICE.
8. THE LANDSCAPE CONTRACTOR IS TO LOCATE AND VERIFY ALL UNDERGROUND AND OVERHEAD UTILITIES PRIOR TO BEGINNING WORK. CONTACT PROPER UTILITY COMPANIES AND/OR GENERAL CONTRACTOR PRIOR TO DIGGING FOR FIELD VERIFICATION. THE OWNER AND THE LANDSCAPE ARCHITECT SHALL NOT BE RESPONSIBLE FOR ANY DAMAGES TO UTILITY OR IRRIGATION LINES.
9. LANDSCAPE CONTRACTOR IS TO VERIFY ALL CURRENT DRAWINGS AND CHECK FOR DISCREPANCIES AND BRING TO THE ATTENTION OF THE LANDSCAPE ARCHITECT PRIOR TO COMMENCING WITH THE WORK.
10. ALL UNATTENDED AND UNPLANTED TREES PITS ARE TO BE PROPERTY BARRICADED AND FLAGGED DURING INSTALLATION.
11. ALL PLANTING PLANS ARE ISSUED AS DIRECTIVES FOR SITE LAYOUT. ANY DEVIATIONS, SITE CHANGES, ETCETERA, ARE TO BE BROUGHT TO THE ATTENTION OF THE LANDSCAPE ARCHITECT FOR CLARIFICATION PRIOR TO INSTALLATION.

TERMITE SOIL STATEMENT

ALL BUILDING SHALL HAVE A PRE-CONSTRUCTION TREATMENT PROTECTION AGAINTS SUBTERRANEAN TERMITES. THE RULES AND LAWS AS ESTABLISHED BY THE FLORIDA DEPARTMENT OF AGRICULTURE AND CONSUMER SERVICES SHALL BE DEEMED AS APPROVED WITH RESPECT TO PRECONSTRUCTION SOIL TREATMENT FOR PROTECTION AGAINST SUBTERRANEAN TERMITES. A CERTIFICATE OF COMPLIANCE SHALL BE ISSUED TO THE BUILDING DEPARTMENT BY THE LICENSED PEST CONTROL COMPANY THAT CONTAINS THE FOLLOWING STATEMENT: " THE BUILDING HAS RECEIVED A COMPLETE TREATMENT FOR THE PREVENTION OF SUBTERRANEAN TERMITES. TREATMENT IS IN ACCORDANCE WITH RULES AND LAWS ESTABLISHED BY THE FLORIDA DEPARTMENT OF AGRICULTURE AND CONSUMER SERVICES (AS PER R4409.13.5 FBC 2014)

PLANTING NOTES

1. ALL PLANT MATERIAL IS TO BE FLORIDA No.1 OR BETTER PURSUANT TO THE FLORIDA DEPARTMENT OF AGRICULTURE'S GRADES AND STANDARDS FOR NURSERY PLANTS.
2. -SOD IS TO BE GRADE "A" WED FREE.
3. -ALL AREAS MARKED "LAWN" SHALL BE SOLID SODDED WITH ST. AUGUSTINE "FLORATAM" SOLID SOD. SEE LIMIT ON PLANS.
-ALL AREAS MARKED "BAHIA GRASS" SHALL BE SOLID SODDED WITHPASPALUM NOTATUM.
-ALL SOD IS TO BE LAID LEVEL, TIGHT, AND CUT EVEN ALONG PLANTING BEDS.
4. -ALL PLANTS ARE TO BE TOP DRESSED WITH A MINIMUM 3"LAYER OFMELALUCA MULCH, EUCALYPTUS MULCH OR EQUAL.
5. -PLANTING PLANS SHALL TAKE PRECEDENCE OVER PLANT LIST IN CASE OF DISCREPANCIES.
6. -NO CHANGES ARE TO BE MADE WITHOUT THE PRIOR CONSENT OF THE LANDSCAPE ARCHITECT AND OWNER. ADDITIONS AND/OR DELETIONS TO THE PLANT MATERIAL MUST BE APPROVED BY THE PROJECT ENGINEER.
7. -LANDSCAPE CONTRACTOR IS RESPONSIBLE FOR PROVIDING THEIR OWN SQUARE FOOTAGE TAKE OFFS AND FIELD VERIFICATIONS FOR 100% SOD COVERAGE FOR ALL AREAS SPECIFIED.
8. -ALL LANDSCAPE AREAS ARE TO BE PROVIDED WITH AUTOMATIC SPRINKLER SYSTEM WHICH PROVIDE 100% COVERAGE, AND 50% OVERLAP.
9. -ALL TREES IN LAWN AREAS TO RECEIVE A 24' DIAMETER MULCHED SAUCER AT THE BASE OF THE TRUNK.
10. -ALL LAWN LOCATED IN PARKING ISLANDS IS TO BE SET FLUSH WITH TOP OF CURB. PROVIDE ADEQUATE SOIL WITHIN 3" OF TOP OF CURB.
11. -TREES ARE TO BE PLANTED WITHIN PARKING ISLANDS AFTER SOIL IS BROUGHT UP TO GRADE. DEEPLY SET ROOT BALLS ARE NOT ACCEPTABLE.
12. -PLANTING SOIL FOR TOPSOIL AND BLACKFILL SHALL BE 50/50 MIX, NEMATODE FREE BY MORRIS MAGIC SOIL, HIALEAH, FLORIDA.PLANTING SOIL FOR ANNUAL BEDS TO BE COMPRISED OF 50% CANADIAN PEAT MOSES, 25% SALT FREE COARSE SAND AND 25% AEROLITE.
13. -TREE AND SHRUB PITS WILL BE SUPPLEMENTED WITH "AGRIFORM PELLS", 21 GRAM SIZE WITH A 20-10-5 ANALYSIS, OR SUSBTITUTE APPLICATION.

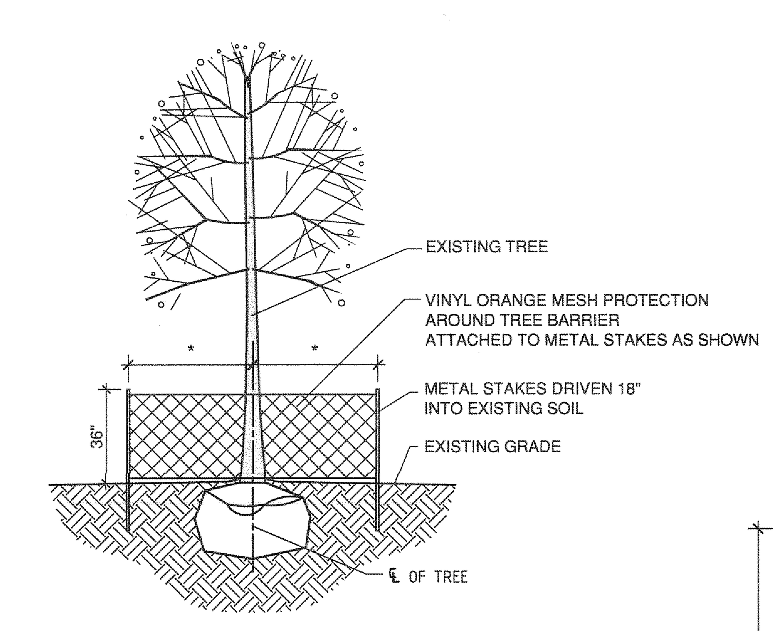

EXISTING TREE BARRIER DETAIL SECTION

TO PROTECTS TREE DURING CONSTRUCTION
N.T.S.

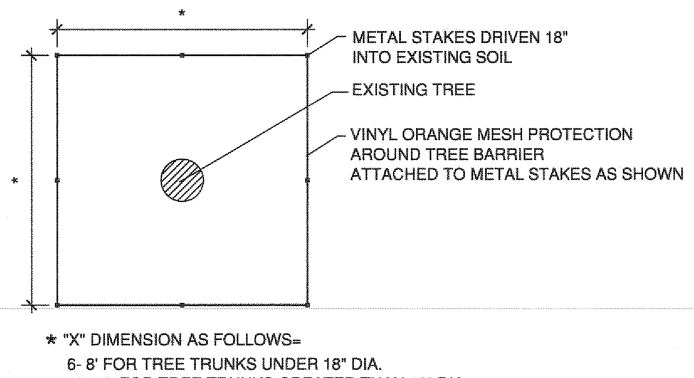

* "X" DIMENSION AS FOLLOWS=
6- 8' FOR TREE TRUNKS UNDER 18" DIA.
10'-12' FOR TREE TRUNKS GREATER THAN 18" DIA.

EXISTING TREE BARRIER DETAIL - PLAN VIEW DETAIL

TREE PROTECTION DURING CONSTRUCTION
N.T.S.

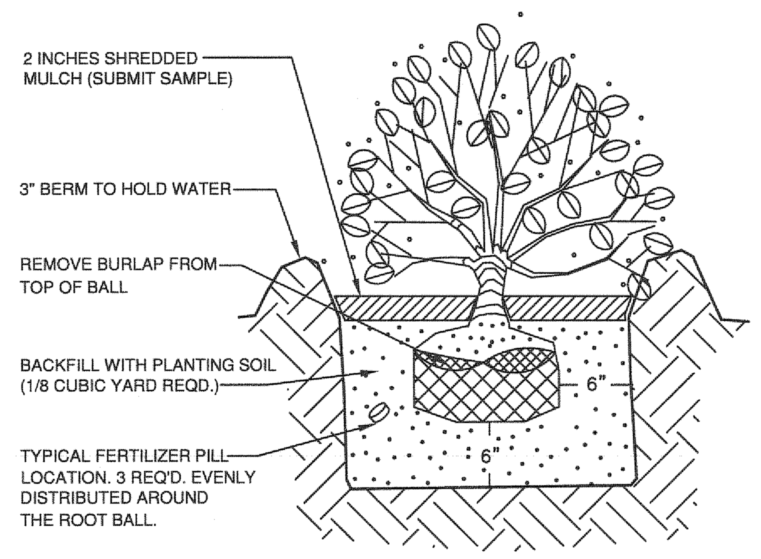

SHRUB PLANTING DETAIL

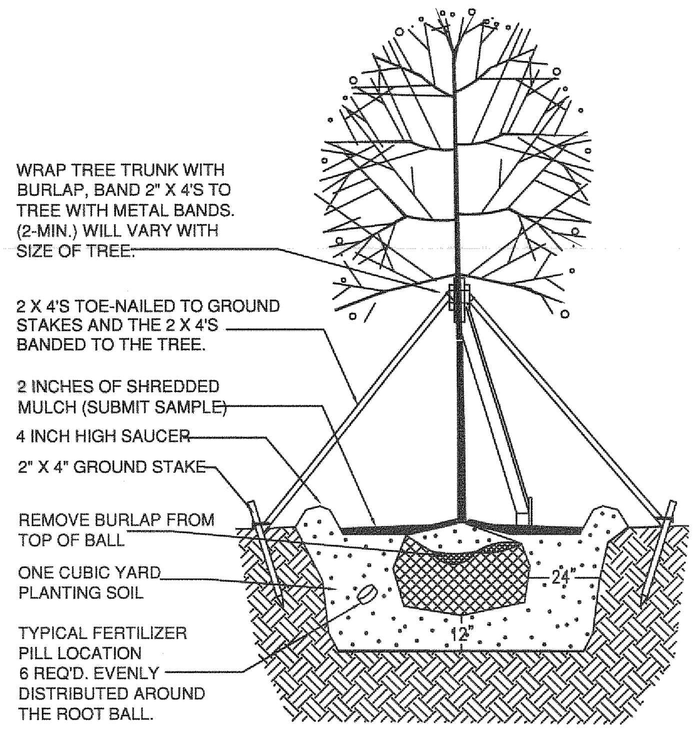

TREE PLANTING DETAIL

N.T.S.

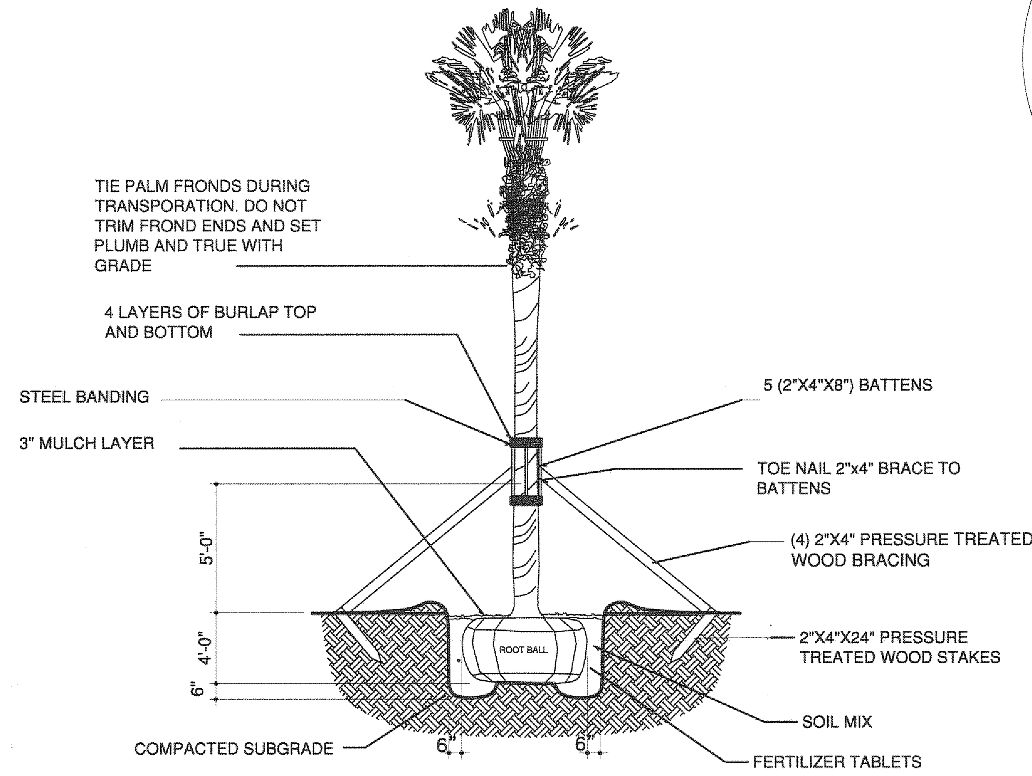

PALM PLANTING DETAIL

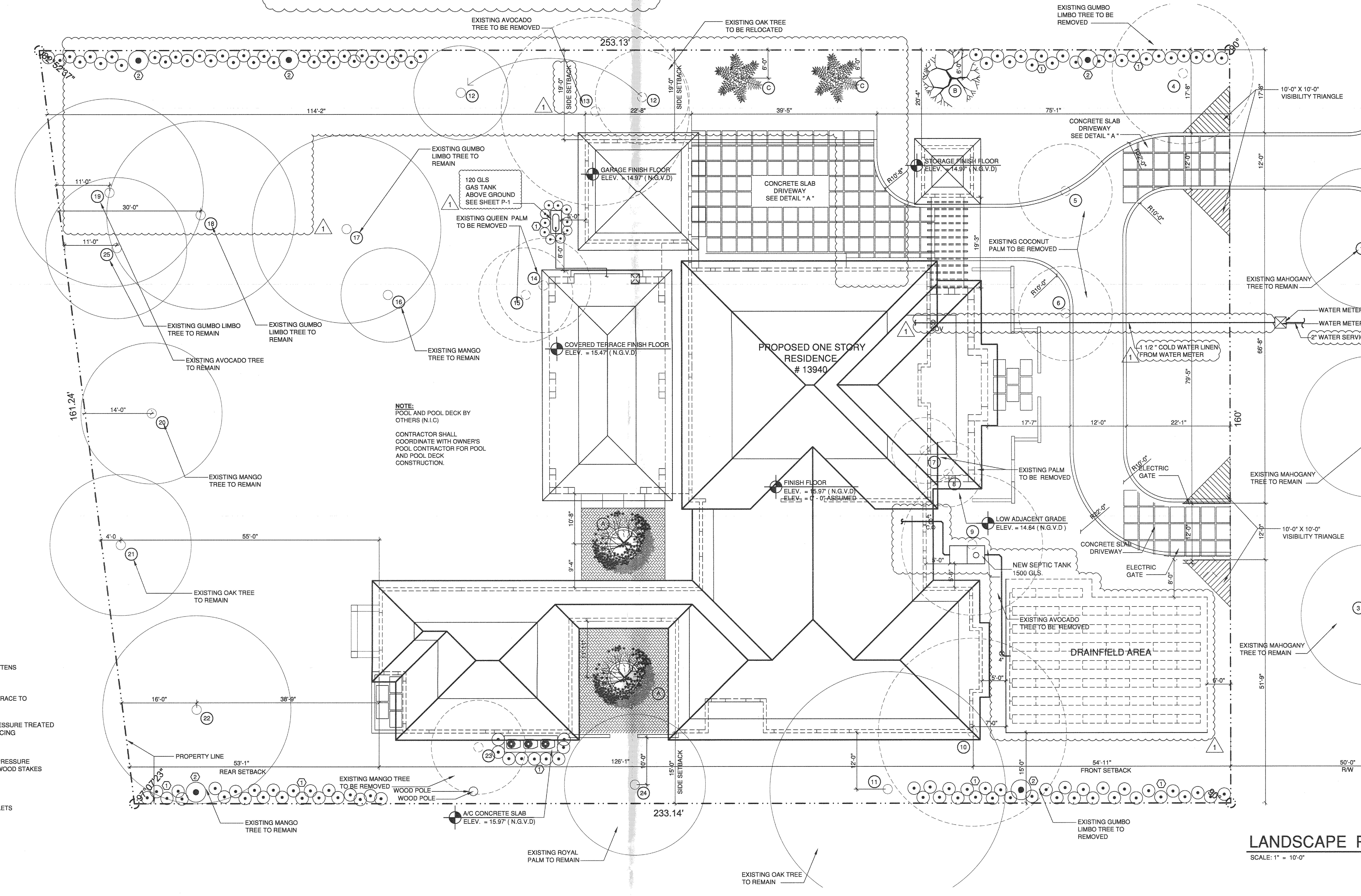

LANDSCAPE PLAN

SCALE: 1" = 10'-0"

A CUSTOM RESIDENCE FOR:

Mr. AND MRS. R. SANCHEZ / NOLAN RODRIGUEZ
13940 OLD CUTTLER ROAD
PALMETTO BAY, FLORIDA

BELLÓN architecture
13131 S.W. 132 STREET SUITE 104
MIAMI, FLORIDA 33186
T. (305) 278-7776
F. (305) 278-7473
WWW.BELLONMILANES.COM
AA-26002616
ARCHITECTURE
LAND PLANNING
INTERIORS
CONSTRUCTION MANAGEMENT

CONSULTANTS

MARK	DATE	DESCRIPTION

PROJECT No.	LB269
DRAWN BY:	JP / AM
CHECKED BY:	LB
DATE:	06-18-14

STATE OF FLORIDA LEOPOLDO BELLON AR0017377

LEOPOLDO BELLON, AIA (AR-8737)

SHEET TITLE: LANDSCAPE PLAN

SHEET LP-1 OF

SEPTIC SYSTEM DATA

ESTIMATED SEWAGE FLOW AS PER 64E-6008 TABLE #1 (RESIDENCIAL)

TOTAL LIVING AREA OF RESIDENCE UNDER A/C	6,600 SQ.FT.	
FIRST 3,300 SQ FT	400 GPD	
FOR EACH ADDITIONAL 750 SQ. FT. INCREASED 60 GPD	300 GPD	
AVERAGE FLOW	700 GPD	1

NEW SEPTIC SYSTEM = 100 % 700 GPD 1

NEW SEPTIC SYSTEM (58 DFU)
700 GPD / 0.8 = 875 SQ FT (REQUIRED TRENCH DRAINFIELD)
875 SQ FT X 1.5 = 1,313 SQ FT = (TOTAL AREA)
1,313 SQ FT - 875 SQ FT. = 438 UNOBSTRUCTED AREA
PROVIDE CHAMBERS WITH 15 SQ FT ABSORTION PER CHAMBER
875 SQ FT / 15 = 58.33 - TOTAL OF (59) 2' X 5' CHAMBERS
(1500 GAL. SEPTIC TANK CAPACITY) 1

* VISIBILITY TRIANGLES NOTE:

ALL TRIANGLES OF VISIBILITY SHALL BE KEPT CLEAR OF VISUAL OBSTRUCTIONS BETWEEN A HEIGHT OF TWO AND A HALF (2.5) FEET AND EIGHT (8) FEET ABOVE THE ESTABLISHED GRADE.

SEPTIC TANK NOTE:

THERE ARE NO PERTINENT FEATURES ON ADJACENT PROPERTIES OR ACROSS THE STREET THAT MAY AFFECT THE SEPTIC TANK SYSTEM INSTALLATION.

LEGAL DESCRIPTION :

LOT 2 IN BLOCK 3 OF FARMERS ACRES, ACCORDING TO THE PLAT THEREOF, AS RECORDED IN PLAT BOOK 50 AT PAGE 85 OF THE PUBLIC RECORDS OF MIAMI-DADE COUNTY, FLORIDA.

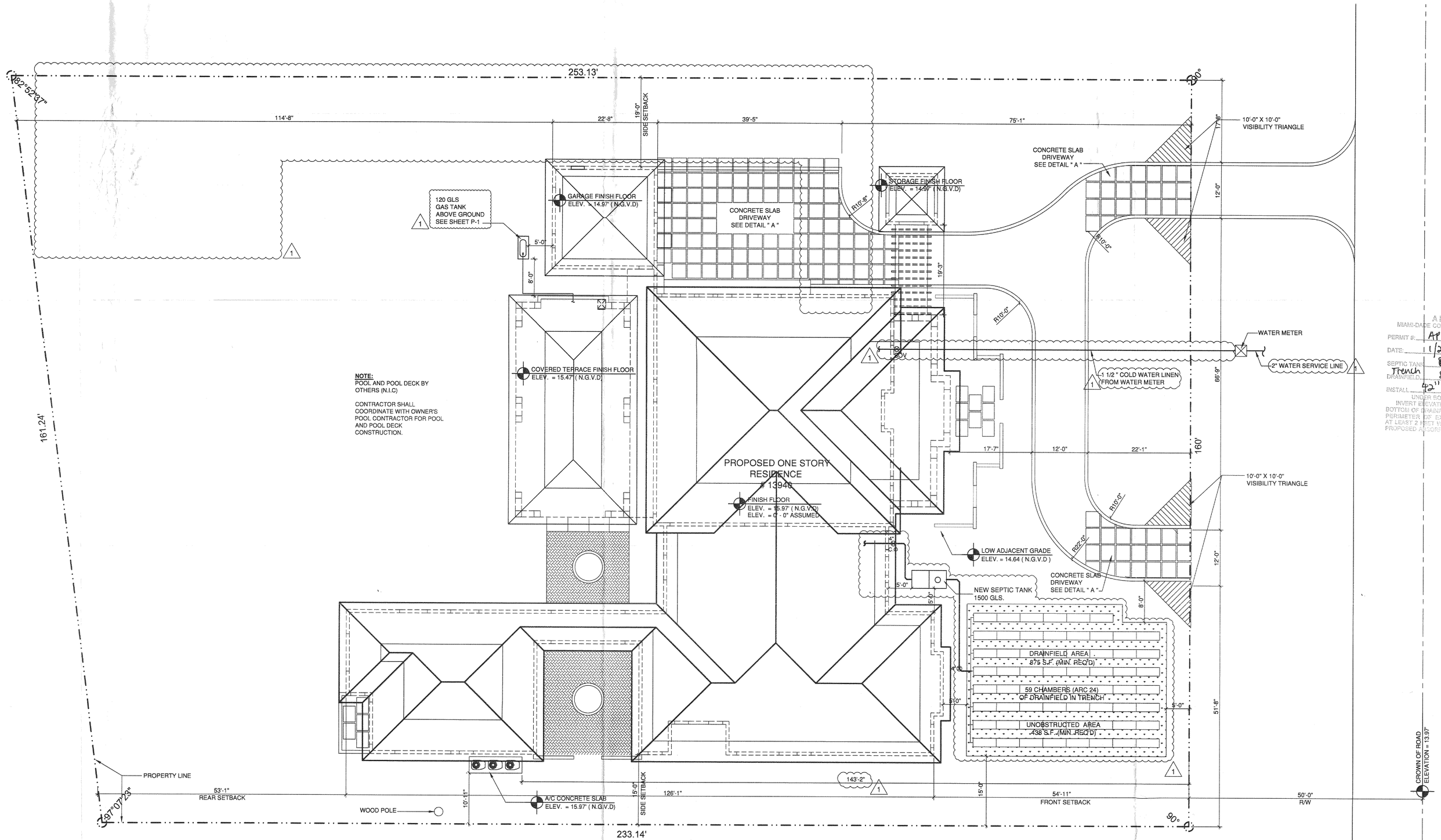

SEPTIC TANK
SCALE: 1" = 1'-0"

APPROVED
MIAMI-DADE COUNTY HEALTH DEPARTMENT
PERMIT #: AP 1211646N
DATE: 11/25/2016
SEPTIC TANK: 1500 GAL. (MIN)
DRAINFIELD: Trench 875 SQ. FT. (MIN)
INSTALL: 42" OF SUITABLE LIMITED SOIL UNDER BOTTOM OF DRAINFIELD
INVERT ELEVATION: 10.10' NGVD
BOTTOM OF DRAINFIELD ELEVATION: 9.60' NGVD
PERIMETER OF EXCAVATION AREA SHALL BE AT LEAST 2 FEET WIDER AND LONGER THAN THE PROPOSED ABSORPTION SYSTEM

BELL
architecture

13131 S.W. 132 STREET
SUITE 104
MIAMI, FLORIDA 33186
T. (305) 278-7776
F. (305) 278-7473
WWW.BELLONMIAMI.COM
AA-26002616

ARCHITECTURE
LAND PLANNING
INTERIORS
CONSTRUCTION MANAGEMENT

CONSULTANTS

A CUSTOM RESIDENCE FOR:

Mr. AND MRS. R. SANCHEZ / NOLAN RODRIGUEZ
13940 OLD CUTTLER ROAD
PALMETTO BAY, FLORIDA

MARK	DATE	DESCRIPTION
1	12-17-15	B.D.C

PROJECT No. LB269
DRAWN BY: JP / AM
CHECKED BY: LB
DATE: 06-18-14

STATE OF FLORIDA
LEOPOLDO BELLON
ARCHITECT
AR-8737

LEOPOLDO BELLON, AIA (AR-8737)

SHEET TITLE
SEPTIC TANK

SHEET ST-1 OF

SEPTIC SYSTEM DATA

ESTIMATED SEWAGE FLOW AS PER 64E-6008 TABLE #1 (RESIDENCIAL)

TOTAL LIVING AREA OF RESIDENCE UNDER A/C	6,600 SQ.FT.
FIRST 3,300 SQ FT	400 GPD
FOR EACH ADDITIONAL 750 SQ. FT. INCREASED 60 GPD	264 GPD
AVERAGE FLOW	664 GPD

NEW SEPTIC SYSTEM = ---------- 100 % - 664 GPD

NEW SEPTIC SYSTEM (56 DFU)
664 GPD / 0.8 = 830 SQ FT (REQUIRED TRENCH DRAINFIELD)
830 SQ FT X 1.5 = 1,245 SQ FT = (TOTAL AREA)
1,245 SQ FT - 830 SQ FT. = 415 UNOBSTRUCTED AREA
PROVIDE CHAMBERS WITH 15 SQ FT ABSORTION PER CHAMBER
830 SQ FT / 15 = 55.33 - TOTAL OF (56) 2' X 5' CHAMBERS
(1500 GAL. SEPTIC TANK CAPACITY)

* VISIBILITY TRIANGLES NOTE:

ALL TRIANGLES OF VISIBILITY SHALL BE KEPT CLEAR OF VISUAL OBSTRUCTIONS BETWEEN A HEIGHT OF TWO AND A HALF (2.5) FEET AND EIGHT (8) FEET ABOVE THE ESTABLISHED GRADE.

SEPTIC TANK NOTE:

THERE ARE NO PERTINENT FEATURES ON ADJACENT PROPERTIES OR ACROSS THE STREET THAT MAY AFFECT THE SEPTIC TANK SYSTEM INSTALLATION.

LEGAL DESCRIPTION :

LOT 2 IN BLOCK 3 OF FARMERS ACRES, ACCORDING TO THE PLAT THEREOF, AS RECORDED IN PLAT BOOK 50 AT PAGE 85 OF THE PUBLIC RECORDS OF MIAMI-DADE COUNTY, FLORIDA.

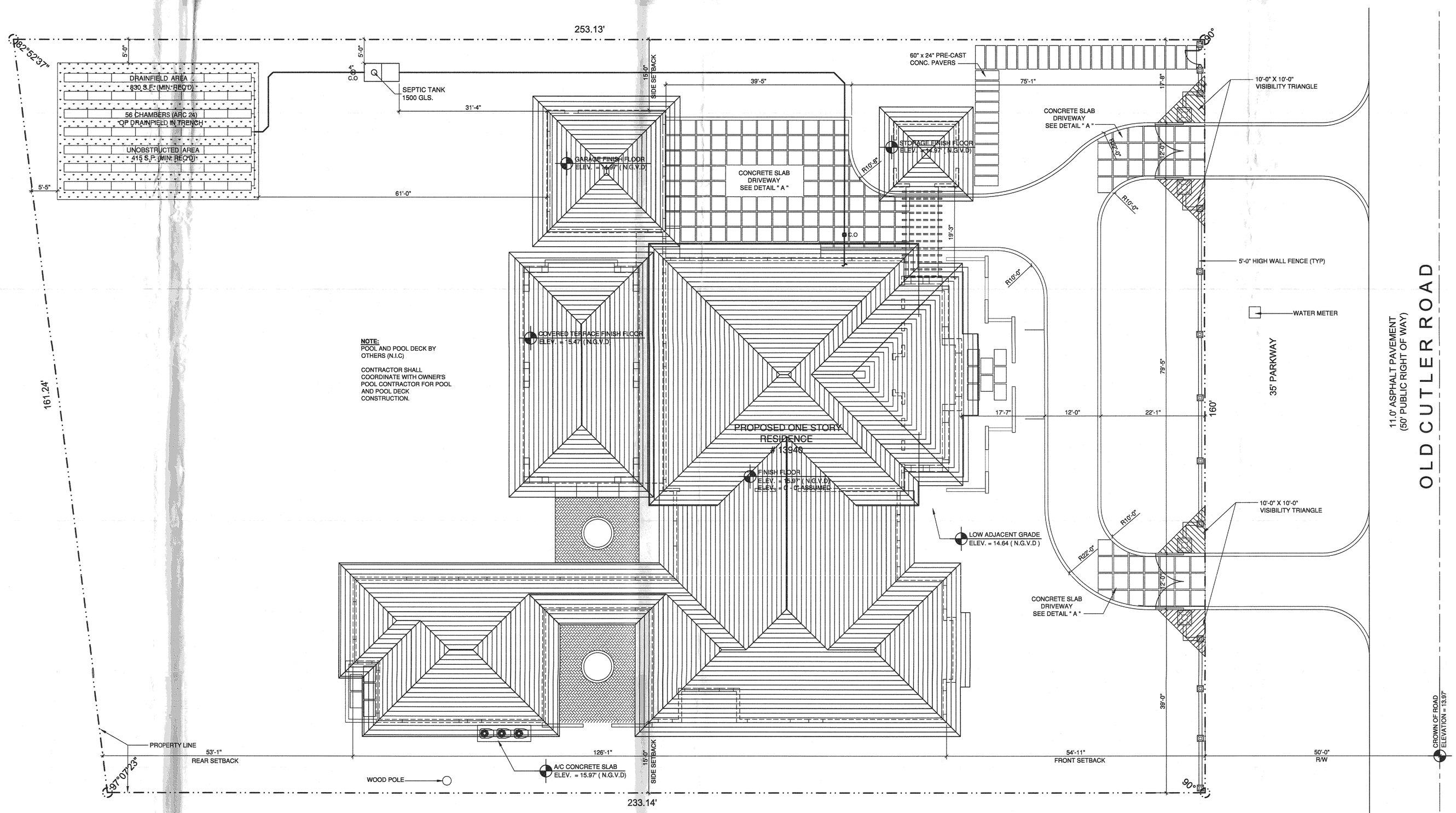

SEPTIC TANK
SCALE: 1" = 10'-0"

BELLÓN
architecture

13131 S.W. 132 STREET
SUITE 104
MIAMI, FLORIDA 33186
T. (305) 278-7776
F. (305) 278-7473
WWW.BELLONMIAMI.COM
AA-26002616

ARCHITECTURE
LAND PLANNING
INTERIORS
CONSTRUCTION MANAGEMENT

CONSULTANTS

A CUSTOM RESIDENCE FOR:

Mr. AND MRS. R. SANCHEZ / NOLAN RODRIGUEZ
13940 OLD CUTTLER ROAD
PALMETTO BAY, FLORIDA

MARK	DATE	DESCRIPTION

PROJECT No. LB269
DRAWN BY: JP / AM
CHECKED BY: LB
DATE: 06-18-14

STATE OF FLORIDA
LEOPOLDO BELLON
REGISTERED ARCHITECT
10-21-14

LEOPOLDO BELLON, AIA (AR-6737)

SHEET TITLE
SEPTIC TANK

SHEET ST-1 OF

SEPTIC SYSTEM DATA

ESTIMATED SEWAGE FLOW AS PER 64E-6008 TABLE #1 (RESIDENCIAL)

TOTAL LIVING AREA OF RESIDENCE UNDER A/C	6,600 SQ.FT.
FIRST 3,300 SQ FT	400 GPD
FOR EACH ADDITIONAL 750 SQ. FT. INCREASED 60 GPD	300 GPD
AVERAGE FLOW	700 GPD 1
NEW SEPTIC SYSTEM = 100 %	700 GPD 1

NEW SEPTIC SYSTEM (58 DFU)
700 GPD / 0.8 = 875 SQ FT (REQUIRED TRENCH DRAINFIELD)
875 SQ FT X 1.5 = 1,313 SQ FT = (TOTAL AREA)
1,313 SQ FT - 875 SQ FT. = 438 UNOBSTRUCTED AREA
PROVIDE CHAMBERS WITH 15 SQ FT ABSORTION PER CHAMBER
875 SQ FT / 15 = 58.33 - TOTAL OF (59) 2' X 5' CHAMBERS
(1500 GAL. SEPTIC TANK CAPACITY) 1

* VISIBILITY TRIANGLES NOTE:

ALL TRIANGLES OF VISIBILITY SHALL BE KEPT CLEAR OF VISUAL OBSTRUCTIONS BETWEEN A HEIGHT OF TWO AND A HALF (2.5) FEET AND EIGHT (8) FEET ABOVE THE ESTABLISHED GRADE.

SEPTIC TANK NOTE:

THERE ARE NO PERTINENT FEATURES ON ADJACENT PROPERTIES OR ACROSS THE STREET THAT MAY AFFECT THE SEPTIC TANK SYSTEM INSTALLATION.

LEGAL DESCRIPTION :

LOT 2 IN BLOCK 3 OF FARMERS ACRES, ACCORDING TO THE PLAT THEREOF, AS RECORDED IN PLAT BOOK 50 AT PAGE 85 OF THE PUBLIC RECORDS OF MIAMI-DADE COUNTY, FLORIDA.

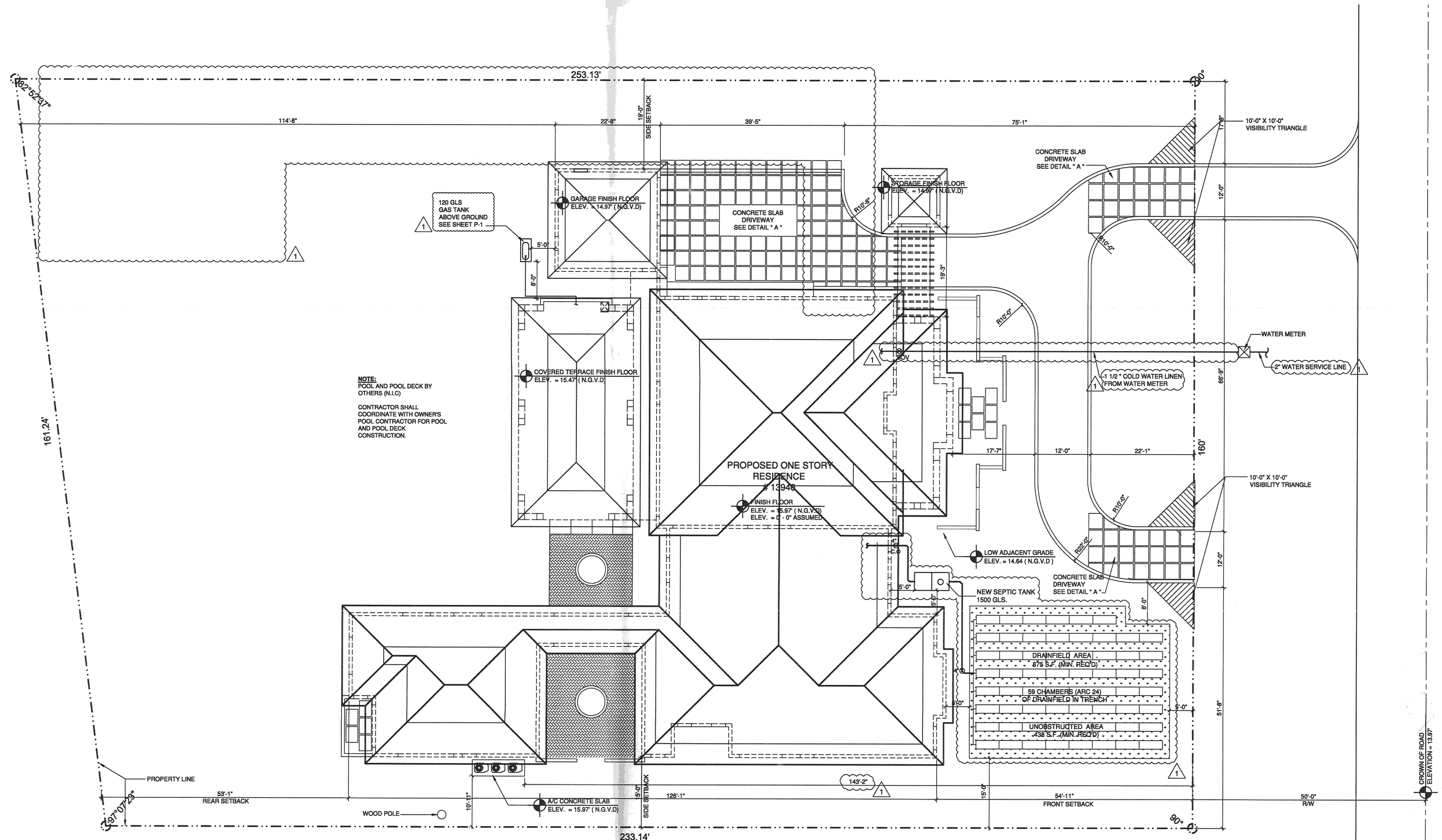

SEPTIC TANK
SCALE: 1" = 1'-0"

BELLÓN architecture
13131 S.W. 132 STREET
SUITE 104
MIAMI, FLORIDA 33186
T. (305) 278-7776
F. (305) 278-7473
WWW.BELLONMILANES.COM
AA-26002616
ARCHITECTURE
LAND PLANNING
INTERIORS
CONSTRUCTION MANAGEMENT

CONSULTANTS

A CUSTOM RESIDENCE FOR:

Mr. AND MRS. R. SANCHEZ / NOLAN RODRIGUEZ
13940 OLD CUTTLER ROAD
PALMETTO BAY, FLORIDA

MARK	DATE	DESCRIPTION
1	12-17-15	B.D.C

PROJECT No. LB269
DRAWN BY: JP / AM
CHECKED BY: LB
DATE: 06-18-14

LEOPOLDO BELLON, AIA (AR-8737)

SHEET TITLE
SEPTIC TANK
ST-1
SHEET OF

SEPTIC SYSTEM DATA

ESTIMATED SEWAGE FLOW AS PER 64E-6008 TABLE #1 (RESIDENCIAL)

TOTAL LIVING AREA OF RESIDENCE UNDER A/C	6,600 SQ.FT.
FIRST 3,300 SQ FT	400 GPD
FOR EACH ADDITIONAL 750 SQ. FT. INCREASED 60 GPD	264 GPD
AVERAGE FLOW	664 GPD

NEW SEPTIC SYSTEM = ---------- 100 % - 664 GPD

NEW SEPTIC SYSTEM (56 DFU)
664 GPD / 0.8 = 830 SQ FT (REQUIRED TRENCH DRAINFIELD)
830 SQ FT X 1.5 = 1,245 SQ FT = (TOTAL AREA)
1,245 SQ FT - 830 SQ FT. = 415 UNOBSTRUCTED AREA
PROVIDE CHAMBERS WITH 15 SQ FT ABSORTION PER CHAMBER
830 SQ FT / 15 = 55.33 - TOTAL OF (56) 2' X 5' CHAMBERS
(1500 GAL. SEPTIC TANK CAPACITY)

* VISIBILITY TRIANGLES NOTE:

ALL TRIANGLES OF VISIBILITY SHALL BE KEPT CLEAR OF VISUAL OBSTRUCTIONS BETWEEN A HEIGHT OF TWO AND A HALF (2.5) FEET AND EIGHT (8) FEET ABOVE THE ESTABLISHED GRADE.

SEPTIC TANK NOTE:

THERE ARE NO PERTINENT FEATURES ON ADJACENT PROPERTIES OR ACROSS THE STREET THAT MAY AFFECT THE SEPTIC TANK SYSTEM INSTALLATION.

LEGAL DESCRIPTION :

LOT 2 IN BLOCK 3 OF FARMERS ACRES, ACCORDING TO THE PLAT THEREOF, AS RECORDED IN PLAT BOOK 50 AT PAGE 85 OF THE PUBLIC RECORDS OF MIAMI-DADE COUNTY, FLORIDA.

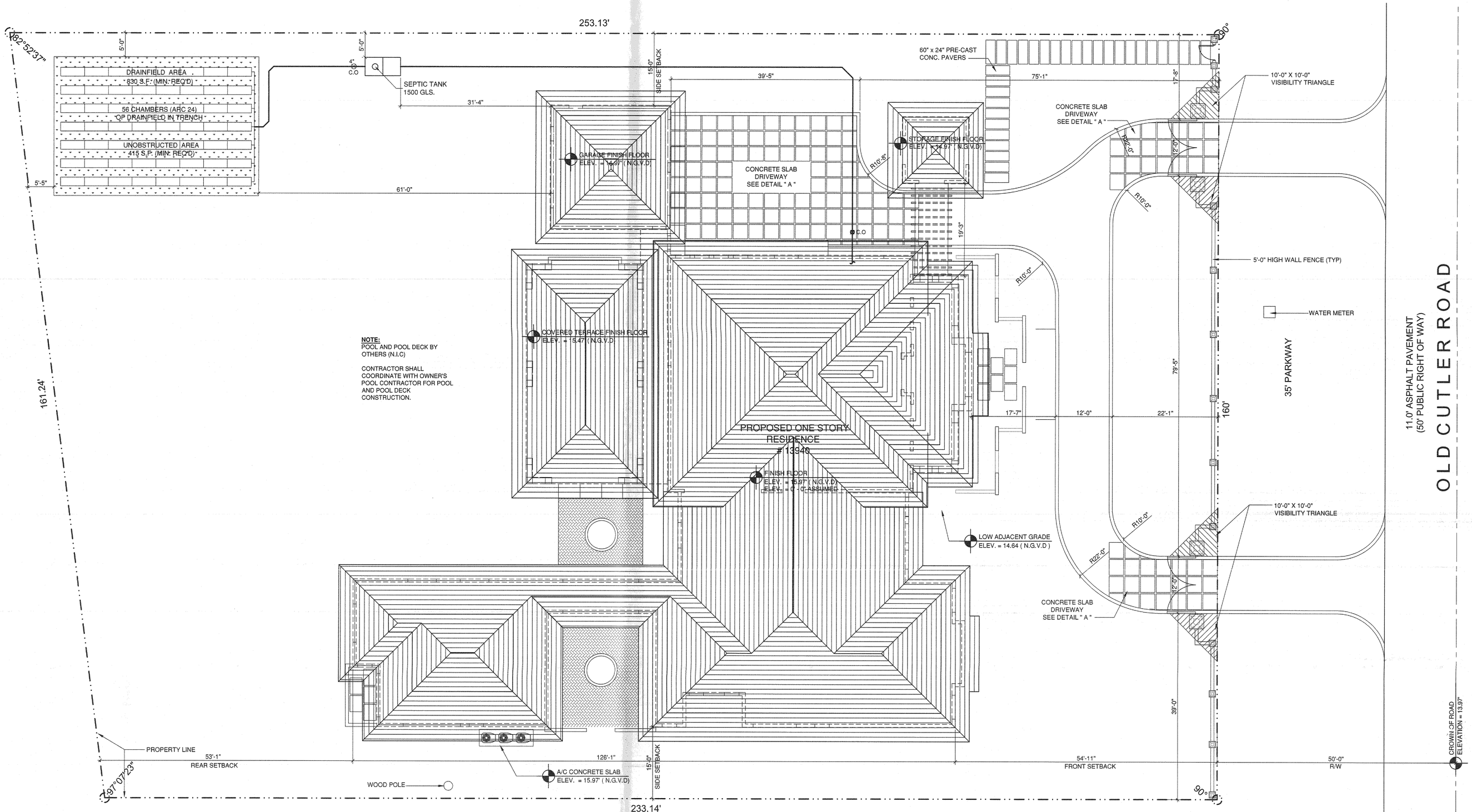

SEPTIC TANK
SCALE: 1" = 10'-0"

BELLÓN
architecture

13131 S.W. 132 STREET
SUITE 104
MIAMI, FLORIDA 33186
T. (305) 278-7776
F. (305) 278-7473
WWW.BELLONMILANES.COM
AA-26002616

ARCHITECTURE
LAND PLANNING
INTERIORS
CONSTRUCTION MANAGEMENT

CONSULTANTS

A CUSTOM RESIDENCE FOR:

Mr. AND MRS. R. SANCHEZ / NOLAN RODRIGUEZ
13940 OLD CUTTLER ROAD
PALMETTO BAY, FLORIDA

MARK	DATE	DESCRIPTION

PROJECT No. LB269
DRAWN BY: JP / AM
CHECKED BY: LB
DATE: 06-18-14

STATE OF FLORIDA
LEOPOLDO BELLON
AR8737
REGISTERED ARCHITECT

LEOPOLDO BELLON, AIA (AR-8737)

SHEET TITLE
SEPTIC TANK

ST-1

SHEET OF

GENERAL NOTES

ALL WORK SHALL BE PERFORMED IN ACCORDANCE WITH ALL CODES, RULES, REGULATIONS AND RESTRICTIONS HAVING JURISDICTION ON THIS PROJECT. AS PER LATEST EDITION OF FLORIDA BUILDING CODE.

WORK SHALL INCLUDE ALL ITEMS (BUILDING AND SITE) INDICATED ON THESE DRAWINGS UNLESS OTHERWISE NOTED.

CONTRACTOR SHALL VERIFY ALL DIMENSIONS PRIOR TO CONSTRUCTION. THE ARCHITECT SHALL BE NOTIFIED OF ANY DEVIATION FROM THE PLANS PRIOR TO CONSTRUCTION.

DRAWINGS SHALL NOT BE SCALED; WRITTEN DIMENSIONS SHALL TAKE PRECEDENCE OVER SCALED DIMENSIONS.

SHOP DRAWINGS FOR WINDOWS,DOORS,WOOD TRUSSES,STAIRS & RAILINGS SHALLBE SUBMITTED TO THE ARCHITECT FOR GENERAL REVIEW, DESIGN COMPLIANCE AND APPROVAL.

CONTRACTOR SHALL MAINTAIN TEMPORARY ELECTRICAL, WATER AND SANITARY FACILITIES FOR THE DURATION OF CONSTRUCTION.

CONTRACTOR SHALL REMOVE ALL CONSTRUCTION DEBRIS FROM THE JOB SITE ON A REGULAR BASIS AND LEAVE THE BUILDING BROOM CLEAN.

THE CONTRACTOR SHALL ACQUAINT HIMSELF WITH THE SITE PRIOR TO CONSTRUCTION AND SHALL VERIFY ALL FIELD CONDITIONS PRIOR TO ACTUAL CONSTRUCTION. ANY DEVIATION FROM THE CONSTRUCTION DOCUMENTS DISCOVERED AT THIS TIME SHALL BE REPORTED BY THE CONTRACTOR IMMEDIATELY TO THE ARCHITECT.

ALL WORKMANSHIP SHALL BE NEAT, CLEAN, TRUE AND CORRECT.

ALL GLASS WITHIN 12" OF ANY DOOR, FIXED GLASS, SLIDING GLASS DOORS AND ALL GLAZING AT TUB AND SHOWER ENCLOSURES SHALL BE TEMPERED SAFETY GLASS.

OMISSIONS FROM THE DRAWINGS OR SPECS. OR THE MISDESCRIPTION OF DETAILS OF WORK, WHICH ARE MANIFESTLY NECESSARY TO CARRY OUT THE INTENT OF THE DRAWINGS & SPECS., OR WHICH ARE CUSTOMARILY PERFORMED, SHALL NOT RELIEVE THE CONTRACTOR FROM PERFORMING SUCH OMITTED OR MISDESCRIBED DETAILS OF WORK, BUT THEY SHALL BE PERFORMED AS IF FULLY AND CORRECTLY SET FORTH AND DESCRIBED IN THE DRAWINGS AND SPECIFICATIONS.

ALL WOOD AND/OR STEEL COLUMNS SHALL BE 1 HOUR FIRE RATED .

WOOD FURRING IN CONTACT WITH MASONRY MUST BE PRESSURE TREATED 2014 F.B.C.

DOORS & WINDOWS

CLOSET & BATHROOM DOORS SHALL COMPLY W/ SECTIONS 24-2.4.3 AND 24-2.4.4 NFPA

NFPA 24-2.4.3 EVERY CLOSET DOOR LATCH SHALL BE SUCH THAT CHILDREN CAN OPEN THE DOOR FROM INSIDE THE CLOSET.

NFPA 24-2.4.4 EVERY BATHROOM DOOR LOCK SHALL BE DESIGNED TO PERMIT THE OPENING OF THE LOCKED DOOR FROM THE OUTSIDE IN AN EMERGENCY.

BUILDING IDENTIFICATION

REQUIRED APPROVED NUMBERS OR ADDRESSES BE PLACED ON ALL NEW AND EXISTING BUILDINGS IN SUCH POSITION AS TO BE PLAINLY VISIBLE AND LEGIBLE FROM THE STREET OR ROAD FRONTING THE PROPERTY. SAID NUMBERS SHALL CONTRAST WITH THEIR BACKGROUND

EACH BUILDING, OR PORTION OF BUILDING, HAVING AN ADDRESS NUMBER, THE OWNER OR PERSON IN CHARGE OF THE BUILDING, OR OF EACH PORTION, SHALL CAUSE SUCH ADDRESS NUMBER TO BE DISPLAYED AT ALL TIMES, IN NUMERALS ON OR ADJACENT TO THE BUILDING, OR PORTION, SO THAT THE NUMERALS ARE READABLE FROM THE STREET OR THOROUGHFARE TO WHICH THE NUMBER APPLIES. NUMERALS SHALL BE AT LEAST SIX INCHES IN HEIGHT FOR MULTIFAMILY RESIDENTIAL BUILDINGS..."

FIRE

G.C. SHALL INSTALL PORTABLE FIRE EXTINGUISHERS DURING THE TIME OF CONSTRUCTION IN COMPLIANCE OF THE FLORIDA FIRE PREVENTION CODE NFPA 1, 2010 EDITION SECTIONS

IF COMBUSTIBLE LIQUIDS WILL BE STORED, HANDLED OR USED ON THE CONSTRUCTION SITE THE G.C. SHALL COMPLY WITH THE FLORIDA FIRE PREVENTION CODE NFPA 1, 2010 EDITION

COMPLY WITH FLORIDA FIRE PREVENTION CODE 2009 EDITION

NON-BEARING INTERIOR PARTITIONS

ALL INTERIOR NON BEARING PARTITIONS SHALL BE 3 5/8"
METAL STUDS
GA AT 24" O.C. MAX. SPACING W/ 1/2" MIN. GYPSUM DRYWALL EACH SIDE.

PLUMBING NOTES

PLUMBING AND MECHANICAL PLANS, ARE PART OF THESE PERMIT PLANS

ALL PLUMBING FIXTURES EQUIPMENT SHALL COMPLY W/ F. B. C. 2010

FURNISH ALL LABOR, MATERIALS AND EQUIPMENT REQUIRED FOR THE COMPLETION OF THE SOIL, WASTE, VENT, DOMESTIC WATER HEATERS, PLUMBING FIXTURES AND ALL OTHER SYSTEMS AS INDICATED ON THE DWGS.

ALL WORK AND MATERIALS SHALL BE IN STRICT ACCORDANCE WITH ALL LOCAL CODES, RULES AND ORDINANCES HAVING JURISDICTION.

ALL WORK SHALL BE PERFORMED BY A LICENSED PLUMBING CONTRACTOR, IN A FIRST-CLASS WORKMANLIKE MANNER AND MAKE THE COMPLETED SYSTEM FULLY OPERATIVE.

ALL WORK SHALL BE COORDINATED WITH OTHER TRADES TO AVOID INTERFERENCE WITH THE PROCESS OF CONSTRUCTION.

ALL REQUIRED INSURANCE SHALL BE PROVIDED FOR PROTECTION AGAINST PUBLIC LIABILITY & PROPERTY DAMAGE FOR THE DURATION OF THE WORK.

ALL MATERIALS SHALL BE NEW AND SHALL BEAR UNDERWRITERS' AND UNION LABELS WHERE REQUIRED.

UNDERGROUND METAL PIPING SHALL BE PROTECTED WITH A COAT OF BITUMINOUS COMPOUND BEFORE COVERING. "BITUMASTIC" OR EQUAL.

ALL UNDERGROUND SOIL AND WASTE PIPING SHALL BE SCHEDULE 40 P.V.C. OR SERVICE WEIGHT CAST IRON WITH MEDIUM WEIGHTS CAST IRON FITTINGS. ALL JOINTS BELOW SLAB TO BE MADE WITH OAKUM AND PURE VIRGIN LEAD.

SOIL, WASTE AND VENT PIPING ABOVE SLAB TO BE SAME AS SPECIFIED FOR BELOW SLAB EXCEPT THAT THE CONTRACTOR MAY AT HIS OPTION USE NO- HUM PIPE AND FITTINGS IF ACCEPTABLE BY LOCAL AUTHORITIES.

ALL PIPING SHALL BE SUPPORTED IN APPROVED MANNER FROM BUILDING STRUCTURE. HANGERS FOR COPPER PIPING SHALL BE COPPER OR COPPER PLATED.

ALL HOSE BIBS SHALL BE FURNISHED W/ BACK FLOW PREVENTERS AND BE MOUNTED 26" ABOVE GRADE.

CONDENSATE DRAIN PIPES SHALL BE A MINIMUM OF 3/4" PVC (SCHEDULE 40) WITH TRAPS, INSULATED WITH 1/2" AMAFLEX, AND TERMINATED 6" ABOVE GRADE OUTSIDE OF THE BUILDING.

FURNISH AND INSTALL PRESSURE RELIEF VALVE LINE AND TERMINATE AT A LOCATION TO PROVIDE READY, VISUAL INDICATION FLOW.

THE HOT WATER LINE SHALL BE FULLY INSULATED WITH 1 INCH AMAFLEX, THROUGH AND BELOW SLAB.

COPPER WATER LINES RUNNING UNDER SLAB SHALL BE PROTECTED BY A MIN. 12 INCHES OF EARTH COVER, 1 INCH AMAFLEX (HOT WATER ONLY) AND SLEEVED 12 INCH BELOW SLAB TO 12 INCHES ABOVE SLAB.

SHOWER HEAD WATER FLOW MUST BE RESTRICTED TO NO MORE THAN 2.5 GALLONS PER MINUTE.

TEST ALL WATER PIPING UNDER A 150# HYDROSTATIC TEST FOR A MINIMUM PERIOD OF 2 HOURS.

VERIFY ALL DIMENSIONS WITH STRUCTURE PRIOR TO ANY FABRICATION OR INSTALLATION.

DRAWINGS ARE DIAGRAMMATIC. DO NOT SCALE FOR THE EXACT LOCATION OF FIXTURES, PIPING, EQUIPMENT, ETC.

PLUMBING CONTRACTOR SHALL VERIFY ALL SPACE CONDITIONS & DIMENSIONS AT JOB SITE PRIOR TO FABRICATION AND INSTALLATION OF MATERIALS AND EQUIPMENT.

EXTEND SERVICE TO WATER METER. PROVIDE WATER METER AND SHUTOFF VALVE IN VALVE BOX OUTSIDE BLDG. CONSULT ARCHITECT FOR LOCATION.

LOCATIONS WHERE PIPES PENETRATE WALLS, FLOORS, AND CEILINGS SHALL BE WATERTIGHT.

SANITARY PIPES SHALL BE OF HUBLESS CAST IRON OR PVC (SCHEDULE 40) AS APPROVED BY BUILDING OFFICIAL.

CONTRACTOR TO VERIFY AT SITE LOCATION, ALL EXISTING CONDITIONS, ELEVATIONS AND SIZE OF EXISTING MAINS, WATER AND SEWER FOR CONNECTION OF NEW SERVICES BEFORE INSTALLATION OF ANY PIPING.

PROTECT ALL FIXTURES AGAINST WATER HAMMER W/ APPROVED AIR CHAMBERS OR SHOCK ABSORBERS.

PROVIDE CONTROL VALVES TO ALL MAINS ENTERING THE BUILDING, RISERS, BRANCHES, GROUP OF FIXTURES, AND TO EACH PIECE OF EQUIPMENT.

PROVIDE FULLY ACCESSIBLE CLEANOUTS ON SANITARY AND ANY WASTE PIPING, AT EVERY CHANGE OF DIRECTION, AND AT BOTTOM OF STACKS. CLEANOUTS LOCATION AND SIZES ON HORIZONTAL LINES SHALL BE ACCORDING TO CODE.

VENT LINES TO EXTEND 6" MINIMUM ABOVE ROOF AND FLASH WITH LEAD.

PROVIDE AIR CHAMBERS AND SHUT OFF VALVES FOR ALL WATER SUPPLY PIPING AT FIXTURES. PROVIDE VACUUM BREAKER AND SHUT OFF VALVE ON ALL HOSE BIBS.

SANITARY PLUMBING PIPING TO HAVE MIN. 1/8" PER FT. PITCH AT ALL HORIZ. RUNS PROVIDE CLEANOUTS AT THE BASE OF WASTE STACKS.

ALL TUBS AND SHOWERS TO BE PROVIDED WITH ANTI-SCALD SHOWER VALVES.

ANCHORAGE

METAL AND WIRE LATH: PNEUMATICALLY FASTENED W/ "PNEU-FAST" 16 GA. STAPLE SPEC. #101-1, TYPE 1 OR BETTER (HOT DIPPED) SATIN FIN. GALVANIZED COATING, HAVING A TENSILE STRENGTH OF 130M PSI. FASTENERS SHALL BE MIN. 1 1/2" LONG, SPACED AT 6" O.C. MAX. & SIDE LAPS SHALL BE SECURED & 9" O.C. MAX.

ELECTRICAL NOTES

THE DWGS. ARE DIAGRAMMATIC & INDICATE THE GENERAL ARRANGEMENT OF THE ELECTRICAL WORK. ANY DISCREPANCIES ON THE DOCUMENTS SHALL BE CALLED TO THE ARCHITECT'S ATTENTION PRIOR TO THE COMMENCEMENT OF WORK. DO NOT SCALE ELECTRICAL DRAWINGS.

ALL WORK SHALL BE DONE IN ACCORDANCE WITH THE LATEST EDITION OF THE NATIONAL ELEC. CODE & ALL CODES, REGULATIONS & RESTRICTIONS HAVING JURISDICTIONS. AS PER FLORIDA BUILDING CODE

CONTRACTOR SHALL VERIFY WITH LOCAL ELECTRICAL UTILITY COMPANY THE SHALL LOCATE METER AND PANEL AS REQUIRED.

CONTRACTOR SHALL VERIFY ALL CONDUCTORS & BREAKERS W/ EQUIP. MFG. SPECIFICATIONS.

ELECTRICAL SYSTEM SHALL BE GROUNDED. PROVIDE PROPER SIZE & TYPE OF PROTECTION DEVICES TO MATCH EQUIPMENT BEING SERVED.

LOAD DATA IS BASED ON INFORMATION GIVEN TO ARCHITECT/ENGINEER AT TIME OF DESIGN. VERIFY ALL EQUIP. & PANEL SIZES PRIOR TO ORDERING.

ALL MATERIALS SHALL BE NEW AND BEAR U.L. LABELS, WHERE APPLICABLE.

ALL WORK SHALL BE DONE BY A LICENSED ELECTRICAL CONTRACTOR IN A FIRST CLASS WORKMANLIKE MANNER. THE COMPLETED SYSTEM SHALL BE FULLY OPERATIVE AND ACCEPTABLE TO THE ENGINEER/ARCHITECT.

ALL WORK SHALL BE COORDINATED WITH OTHER TRADES TO AVOID INTERFERENCE WITH PROGRESS OF CONSTRUCTION.

CONTRACTOR SHALL PROVIDE REQ'D. INSURANCE FOR THE PROTECTION AGAINST PUBLIC LIABILITY AND PROPERTY DAMAGE FOR THE DURATION OF THE WORK.

CIRCUITS SHOWN ON PLANS ARE TO DETERMINE LOAD DATA AND PANEL SIZES. THE CONTRACTOR SHALL PROVIDE CIRCUITS AND REQUIRED ROUTING OF CONDUITS TO SUIT JOB CONDITIONS AND BALANCE LOADS.

FURNISH AND INSTALL FIXTURES AS CALLED FOR ON PLANS OR AS SELECTED BY OWNER.

THE ELECTRICAL CONTRACTOR SHALL COORDINATE THE EXACT LOCATION OF ALL H.V.A.C. EQUIPMENT AND THEIR GIVEN LOAD WITH THE MECHANICAL CONTRACTOR BEFORE ROUGHING-IN FOR PROPER POWER AND WIRING CONTROL LAYOUT & INSTALLATION. DISCREPANCIES BETWEEN THE GIVEN & ACTUAL H.V.A.C. LOADS SHALL BE CORRECTED BEFORE ROUGHING IN.

GROUND-FAULT CIRCUIT PROTECTION; ALL 120V SINGLE PHASE, 15 & 20 AMP OUTLETS INSTALLED OUTDOORS, IN BATHROOMS, & GARAGES SHALL HAVE GFI CIRCUIT BREAKERS OR RECEPTACLES.

ALL BREAKERS SHALL HAVE 10,000 A.I.C. MINIMUM, U.O.N.

INSTALL FACILITIES FOR TEMPORARY CONSTRUCTION POWER AS REQUIRED.

ELECTRICAL CONTRACTOR SHALL NOTIFY ENGINEER/ARCHITECT IN WRITING OF ANY CONFLICT AND/OR DISCREPANCIES FOUND WITH WORK AS SHOWN, SPECIFIED OR IMPLIED ON THESE PLANS, PRIOR TO PROCEEDING W/ WORK.

CONTRACTOR SHALL VERIFY EXACT LOCATIONS OF FIXTURES AND OUTLETS AT JOB SITE BEFORE ROUGHING. CONTRACTOR MAY SELECT DIFFERENT MANUFACTURER OR FIXTURES WITH EQUAL SPECIFICATIONS.

SMOKE DETECTORS SHALL BE HARD WIRED (110 VOLT TYPE) TO NON-SWITCHABLE KITCHEN OR BATHROOM LIGHTING CIRCUIT AND SHALL NOT BE CONNECTED TO THE LOAD SIDE OF A GROUND FAULT CIRCUIT INTERRUPTER. SMOKE DETECTORS SHALL BE PROVIDED W/ VISIBLE "POWER ON INDICATOR" AND A TEST BUTTON WITH BATTERY BACKUP SYSTEM. MULTIPLE DETECTORS MUST BE INTERCONNECTED.

COORDINATE RACEWAY INSTALLATION W/ OTHER TRADES.

ALL ELECTRICAL SWITCHES SHALL BE 48" A.F.F. UNLESS OTHERWISE NOTED.

ALL WALL RECEPTACLES SHALL BE 12" A.F.F. UNLESS OTHERWISE NOTED.

SECURITY NOTES

ALL LOCKS ON EXTERIOR DOORS SHALL RESIST A FORCE OF 300 # APPLIED IN ANY MOVABLE DIRECTION.

ALL EXTERIOR LOCKS SHALL BE SINGLE CYLINDER W/ 1" THROW FOR 1 3/4" SOLID CORE DOOR.

ALL SINGLE EXTERIOR SWING DOORS SHALL HAVE A KEY OPERATED LOCK, OPERABLE FROM EXTERIOR WITH A MINIMUM 6000 POSSIBLE KEY CHANGES.

KEY ON KNOB LOCKS SHALL HAVE AN AUXILIARY DEAD BOLT W/ HARDENED BOLT OR WITH INSERT.

EXT. SWING DOORS SHALL BE SOLID CORE NOT LESS THAN 1 3/4" THICK.

FRONT MAIN ENTRANCE DOORS SHALL BE PROVIDED W/ A VISION SCOPE OR VISION PANEL.

HINGES ON OUT SWINGING EXTERIOR DOORS SHALL HAVE NON-EXPOSED SCREWS AND NON-REMOVABLE PINS.

SINGLE SWING EXTERIOR DOORS CONNECTING LIVING AREAS WITH GARAGE AREAS SHALL BE SOLID CORE 1 3/4" THICK AND SHALL BE SECURED WITH A LATCH AND SINGLE BOLT W/ ONE INCH MIN. THROW OR A COMBINATION OF DEAD BOLT AND DEAD LATCH SETS AND AN AUTOMATIC DOOR CLOSER.

ALL GLASS IN EXTERIOR DOORS SHALL COMPLY WITH ANSI 279.1

ALL WINDOWS (OPERABLE) SHALL WITHSTAND A FORCE OF 150# IN ANY OPERABLE DIRECTION.

SLIDING GLASS DOORS & WINDOWS SHALL BE INSTALLED & CONSTRUCTED SO THAT NO PANEL CAN BE LIFTED FROM THE TRACKS POSITION & SHALL COMPLY W/ THE A.A.M.A 1303-3 STANDARDS FOR FORCED ENTRY RESISTANCE.

SLIDING GLASS DOORS SHALL HAVE DEAD BOLT OR PIN SYSTEM NOT REMOVABLE FROM THE OUTSIDE AT THE JAMB AND SILL.

INTERIOR DOORS TO HAVE A CYLINDRICAL TYPE LOCK SETS W/ PRIVACY LOCK BY INSIDE PUSH BUTTON WHICH AUTOMATICALLY OPENS BY TURN OR CLOSING ACCORDING TO FED. SPEC. #160 AND 1511.

OVERHEAD DOORS SHALL BE PROVIDED WITH MULTIPLE POINT LOCKS OR BE LOCKED AT MORE THAN ONE POINT WITH HARDENED BOLTS WITH INSERTS ENGAGING AT LEAST TWO OPPOSITE POINTS A MIN. OF 5/8".

A.F.F.	Above Finished Floor
ACOUSTIC.	Acoustical
ALUM.	Aluminum
ANOD.	Anodized
BD.	Board
B.O.B.	Bottom of Beam
CAB.	Cabinet
CLG.	Ceiling
CLOS.	Closet
CLR.	Clear
CMU.	Concrete Masonry Unit
CNTR.	Counter
COL.	Column
CONC.	Concrete
CONN.	Connection
CONT.	Continuous
CT.	Ceramic Tile
DBL.	Double
DN.	Down
DR.	Door
DTL.	Detail
DWG.	Drawing
DWR.	Drawer
EA.	Each
EL.	Elevation
ELEC.	Electrical
ELEV.	Elevation
EQ.	Equal
MAX.	Maximum
MECH.	Mechanical
MIN.	Minimum
MISC.	Miscellaneous
MLD.	Molding
M.O.	Masonry Opening
M.T.	Metal Threshold
MTD.	Mounted
MTL.	Metal
MUL.	Mullion
NIC.	Not in Contract
NTS.	Not to Scale
O.C.	On Center
OD.	Outside Diameter
OPNG.	Opening
OPT.	Optional
PBD.	Particle Board
PL.	Plate
PLAM.	Plastic Laminate
PLYWD.	Plywood
PAL	Panel
P.O.S.	Point of Sale
PR.	Pair
PREP.	Preparation
PTD.	Painted
QT.	Quarry Tile
RA.	Return Air
RAD.	Radius
RE.	Reference
EQUIP.	Equipment
EXIST.	Existing
EXT.	Exterior
FBD.	Fiber Board
FBO.	Furnished by Others
FD.	Floor Drain
FE.	Fire Extinguisher
FF&E.	Furniture, Fixtures & Equipment
FIN.	Finish
FLR.	Floor
FRP.	Fiberglass Reinforced Plastic
FSE.	Food Service Equip.
F.V.	Field Verify
GA.	Gage
GALV.	Galvanized
GC.	General Contractor
GL.	Glass
GYP.BD.	Gypsum Board
INT.	Interior
HC.	Handicap Accessible
H.M.	Hollow Metal
HT.	Height
JST.	Joist
LAM.	Laminated
LAV.	Lavatory
MANUF.	Manufactured
RECEPT..	Receptacle
REINF.	Reinforced
REQ'D.	Required
RM.	Room
R.O.	Rough Opening
R.O.J.	Received on Job
S.C.	Solid Core
S/S	Stainless Steel
SCHED.	Schedule
SIM.	Similar
STD.	Standard
STL.	Steel
STRUCT.	Structural
SUSP.	Suspended
TEMP.	Tempered
TYP.	Typical
VCT.	Vinyl Composition Tile
VERT.	Vertical
VWC.	Vinyl Wall Covering
W/	With
W/O	Without
W.C.	Water Closet
WD.	Wood
W.H.	Water Heater
WIN.	Window
WSCT.	Wainscot
WT.	Weight
WWF.	Welded Wire Fabric

1 ABBREVIATIONS

BATHROOMS

PLUMBING FIXTURES SHALL BE INSTALLED AND SPACED IN A MANNER TO PERMIT EASY ACCESS FOR CLEANING AND FOR THE INTENDED USE, AND SHALL BE SET WITH THE MINIMUM CLEARANCES AS SETH FORTH IN F.B.C. 2014 PLUMBING CODE .

ALL MIRRORS EXCEEDING 9 SQUARE FEET INSTALLED IN VERTICAL WALLS SHALL BE SUPPORTED ON THE BOTTOM AND SHALL BE SECURELY AFFIXED TO THE WALL IN ACCORDANCE WITH THE MFR. SPECS.

TOILET ROOMS SHALL COMPLY WITH F.B.C. 2010 ED.
FLOORS SHALL BE OF IMPERVIOUS MATERIAL AS PER F.B.C. 2014 PLUMBING CODE .

ALL WATER CLOSETS, LAVATORIES, SHOWERHEADS, AND SINKS SHALL COMPLY WITH PLUMBING CODE OF THE F.B.C 2014 EDITION

WALL AND CEILING FINISHES NOTE:

1. WALL AND CEILING FINISHES SHALL HAVE A FLAME SPREAD INDEX NOT GREATER THAN 200 PER F.B.C. R302.9.1
2. WALL AND CEILING FINISHES SHALL HAVE A SMOKE DEVELOPED INDEX NOT GREATER THAN 450 AS PER F.B.C. R302.9.2
3. INSULATION MATERIALS SHALL HAVE A FLAME SPEAD INDEX OF NOT MORE THAN 25 & A SMOKE DEVELOPED INDEX OF NOT MORE THAN 450 PER R302.10.1 F.B.C.
4. FOAM PLASTIC INSULATION SHALL BE SEPARATED FROM THE INTERIOR OF BUILDING W/ A MIN. "GYP. BOARD OR OTHER APPROVED THERMAL BARRIER PER R316.4 (SEE WALL SECTION SHEET A-4)
5. FOAM PLASTIC INSULATION SHALL HAVE A FLAME SPREAD INDEX OF NOT MORE THAN 75 & A SMOKE DEVELOPED INDEX OF NOT MORE THAN 450 WHEN TESTED IN ACCORDANCE W/ ASTM E84 OR UL 723, PER R316.3 F.B.C. (SEE WALL SECTION SHEET A-4)

BELLÓN architecture

13131 S.W. 132 STREET
SUITE 104
MIAMI, FLORIDA 33186
T. (305) 278-7776
F. (305) 278-7473
WWW.BELLONMIAMI.COM
AA-26002616

ARCHITECTURE
LAND PLANNING
INTERIORS
CONSTRUCTION MANAGEMENT

CONSULTANTS

A CUSTOM RESIDENCE FOR:
Mr. AND MRS. R. SANCHEZ / NOLAN RODRIGUEZ
13940 OLD CUTTLER ROAD
PALMETTO BAY, FLORIDA

MARK	DATE	DESCRIPTION

PROJECT No. LB269
DRAWN BY: JP / AM
CHECKED BY: LB
DATE 08-18-14

STATE OF FLORIDA LEOPOLDO BELLON AR8737 REGISTERED ARCHITECT
10/22/15

LEOPOLDO BELLON, AIA (AR-8737)

SHEET TITLE
GENERAL NOTES

A-00

SHEET OF

GENERAL NOTES

ALL WORK SHALL BE PERFORMED IN ACCORDANCE WITH ALL CODES, RULES, REGULATIONS AND RESTRICTIONS HAVING JURISDICTION ON THIS PROJECT. AS PER LATEST EDITION OF FLORIDA BUILDING CODE.

WORK SHALL INCLUDE ALL ITEMS (BUILDING AND SITE) INDICATED ON THESE DRAWINGS UNLESS OTHERWISE NOTED.

CONTRACTOR SHALL VERIFY ALL DIMENSIONS PRIOR TO CONSTRUCTION. THE ARCHITECT SHALL BE NOTIFIED OF ANY DEVIATION FROM THE PLANS PRIOR TO CONSTRUCTION.

DRAWINGS SHALL NOT BE SCALED; WRITTEN DIMENSIONS SHALL TAKE PRECEDENCE OVER SCALED DIMENSIONS.

SHOP DRAWINGS FOR WINDOWS,DOORS,WOOD TRUSSES,STAIRS & RAILINGS SHALLBE SUBMITTED TO THE ARCHITECT FOR GENERAL REVIEW, DESIGN COMPLIANCE AND APPROVAL.

CONTRACTOR SHALL MAINTAIN TEMPORARY ELECTRICAL, WATER AND SANITARY FACILITIES FOR THE DURATION OF CONSTRUCTION.

CONTRACTOR SHALL REMOVE ALL CONSTRUCTION DEBRIS FROM THE JOB SITE ON A REGULAR BASIS AND LEAVE THE BUILDING BROOM CLEAN.

THE CONTRACTOR SHALL ACQUAINT HIMSELF WITH THE SITE PRIOR TO CONSTRUCTION AND SHALL VERIFY ALL FIELD CONDITIONS PRIOR TO ACTUAL CONSTRUCTION. ANY DEVIATION FROM THE CONSTRUCTION DOCUMENTS DISCOVERED AT THIS TIME SHALL BE REPORTED BY THE CONTRACTOR IMMEDIATELY TO THE ARCHITECT.

ALL WORKMANSHIP SHALL BE NEAT, CLEAN, TRUE AND CORRECT.

ALL GLASS WITHIN 12" OF ANY DOOR, FIXED GLASS, SLIDING GLASS DOORS AND ALL GLAZING AT TUB AND SHOWER ENCLOSURES SHALL BE TEMPERED SAFETY GLASS.

OMISSIONS FROM THE DRAWINGS OR SPECS. OR THE MISDESCRIPTION OF DETAILS OF WORK, WHICH ARE MANIFESTLY NECESSARY TO CARRY OUT THE INTENT OF THE DRAWINGS & SPECS., OR WHICH ARE CUSTOMARILY PERFORMED, SHALL NOT RELIEVE THE CONTRACTOR FROM PERFORMING SUCH OMITTED OR MISDESCRIBED DETAILS OF WORK, BUT THEY SHALL BE PERFORMED AS IF FULLY AND CORRECTLY SET FORTH AND DESCRIBED IN THE DRAWINGS AND SPECIFICATIONS.

ALL WOOD AND/OR STEEL COLUMNS SHALL BE 1 HOUR FIRE RATED .

WOOD FURRING IN CONTACT WITH MASONRY MUST BE PRESSURE TREATED 2014 F.B.C.

DOORS & WINDOWS

CLOSET & BATHROOM DOORS SHALL COMPLY W/ SECTIONS 24-2.4.3 AND 24-2.4.4 NFPA

NFPA 24-2.4.3 EVERY CLOSET DOOR LATCH SHALL BE SUCH THAT CHILDREN CAN OPEN THE DOOR FROM INSIDE THE CLOSET.

NFPA 24-2.4.4 EVERY BATHROOM DOOR LOCK SHALL BE DESIGNED TO PERMIT THE OPENING OF THE LOCKED DOOR FROM THE OUTSIDE IN AN EMERGENCY.

BUILDING IDENTIFICATION

REQUIRED APPROVED NUMBERS OR ADDRESSES BE PLACED ON ALL NEW AND EXISTING BUILDINGS IN SUCH POSITION AS TO BE PLAINLY VISIBLE AND LEGIBLE FROM THE STREET OR ROAD FRONTING THE PROPERTY. SAID NUMBERS SHALL CONTRAST WITH THEIR BACKGROUND

EACH BUILDING, OR PORTION OF BUILDING, HAVING AN ADDRESS NUMBER, THE OWNER OR PERSON IN CHARGE OF THE BUILDING, OR OF EACH PORTION, SHALL CAUSE SUCH ADDRESS NUMBER TO BE DISPLAYED AT ALL TIMES, IN NUMERALS ON OR ADJACENT TO THE BUILDING, OR PORTION, SO THAT THE NUMERALS ARE READABLE FROM THE STREET OR THOROUGHFARE TO WHICH THE NUMBER APPLIES. NUMERALS SHALL BE AT LEAST SIX INCHES IN HEIGHT FOR MULTIFAMILY RESIDENTIAL BUILDINGS..."

FIRE

G.C. SHALL INSTALL PORTABLE FIRE EXTINGUISHERS DURING THE TIME OF CONSTRUCTION IN COMPLIANCE OF THE FLORIDA FIRE PREVENTION CODE NFPA 1, 2010 EDITION SECTIONS

IF COMBUSTIBLE LIQUIDS WILL BE STORED, HANDLED OR USED ON THE CONSTRUCTION SITE THE G.C. SHALL COMPLY WITH THE FLORIDA FIRE PREVENTION CODE NFPA 1, 2010 EDITION

COMPLY WITH FLORIDA FIRE PREVENTION CODE 2009 EDITION

NON-BEARING INTERIOR PARTITIONS

ALL INTERIOR NON BEARING PARTITIONS SHALL BE 3 5/8"
METAL STUDS
GA AT 24" O.C. MAX. SPACING W/ 1/2" MIN. GYPSUM DRYWALL EACH SIDE.

PLUMBING NOTES

PLUMBING AND MECHANICAL PLANS, ARE PART OF THESE PERMIT PLANS

ALL PLUMBING FIXTURES EQUIPMENT SHALL COMPLY W/ F. B. C. 2010

FURNISH ALL LABOR, MATERIALS AND EQUIPMENT REQUIRED FOR THE COMPLETION OF THE SOIL, WASTE, VENT, DOMESTIC WATER HEATERS, PLUMBING FIXTURES AND ALL OTHER SYSTEMS AS INDICATED ON THE DWGS.

ALL WORK AND MATERIALS SHALL BE IN STRICT ACCORDANCE WITH ALL LOCAL CODES, RULES AND ORDINANCES HAVING JURISDICTION.

ALL WORK SHALL BE PERFORMED BY A LICENSED PLUMBING CONTRACTOR, IN A FIRST-CLASS WORKMANLIKE MANNER AND MAKE THE COMPLETED SYSTEM FULLY OPERATIVE.

ALL WORK SHALL BE COORDINATED WITH OTHER TRADES TO AVOID INTERFERENCE WITH THE PROCESS OF CONSTRUCTION.

ALL REQUIRED INSURANCE SHALL BE PROVIDED FOR PROTECTION AGAINST PUBLIC LIABILITY & PROPERTY DAMAGE FOR THE DURATION OF THE WORK.

ALL MATERIALS SHALL BE NEW AND SHALL BEAR UNDERWRITERS' AND UNION LABELS WHERE REQUIRED.

UNDERGROUND METAL PIPING SHALL BE PROTECTED WITH A COAT OF BITUMINOUS COMPOUND BEFORE COVERING. "BITUMASTIC" OR EQUAL.

ALL UNDERGROUND SOIL AND WASTE PIPING SHALL BE SCHEDULE 40 P.V.C. OR SERVICE WEIGHT CAST IRON WITH MEDIUM WEIGHTS CAST IRON FITTINGS. ALL JOINTS BELOW SLAB TO BE MADE WITH OAKUM AND PURE VIRGIN LEAD.

SOIL, WASTE AND VENT PIPING ABOVE SLAB TO BE SAME AS SPECIFIED FOR BELOW SLAB EXCEPT THAT THE CONTRACTOR MAY AT HIS OPTION USE NO- HUM PIPE AND FITTINGS IF ACCEPTABLE BY LOCAL AUTHORITIES.

ALL PIPING SHALL BE SUPPORTED IN APPROVED MANNER FROM BUILDING STRUCTURE. HANGERS FOR COPPER PIPING SHALL BE COPPER OR COPPER PLATED.

ALL HOSE BIBS SHALL BE FURNISHED W/ BACK FLOW PREVENTERS AND BE MOUNTED 26" ABOVE GRADE.

CONDENSATE DRAIN PIPES SHALL BE A MINIMUM OF 3/4" PVC (SCHEDULE 40) WITH TRAPS, INSULATED WITH 1/2" AMAFLEX, AND TERMINATED 6" ABOVE GRADE OUTSIDE OF THE BUILDING.

FURNISH AND INSTALL PRESSURE RELIEF VALVE LINE AND TERMINATE AT A LOCATION TO PROVIDE READY, VISUAL INDICATION FLOW.

THE HOT WATER LINE SHALL BE FULLY INSULATED WITH 1 INCH AMAFLEX, THROUGH AND BELOW SLAB.

COPPER WATER LINES RUNNING UNDER SLAB SHALL BE PROTECTED BY A MIN. 12 INCHES OF EARTH COVER, 1 INCH AMAFLEX (HOT WATER ONLY) AND SLEEVED 12 INCH BELOW SLAB TO 12 INCHES ABOVE SLAB.

SHOWER HEAD WATER FLOW MUST BE RESTRICTED TO NO MORE THAN 2.5 GALLONS PER MINUTE.

TEST ALL WATER PIPING UNDER A 150# HYDROSTATIC TEST FOR A MINIMUM PERIOD OF 2 HOURS.

VERIFY ALL DIMENSIONS WITH STRUCTURE PRIOR TO ANY FABRICATION OR INSTALLATION.

DRAWINGS ARE DIAGRAMMATIC. DO NOT SCALE FOR THE EXACT LOCATION OF FIXTURES, PIPING, EQUIPMENT, ETC.

PLUMBING CONTRACTOR SHALL VERIFY ALL SPACE CONDITIONS & DIMENSIONS AT JOB SITE PRIOR TO FABRICATION AND INSTALLATION OF MATERIALS AND EQUIPMENT.

EXTEND SERVICE TO WATER METER. PROVIDE WATER METER AND SHUTOFF VALVE IN VALVE BOX OUTSIDE BLDG. CONSULT ARCHITECT FOR LOCATION.

LOCATIONS WHERE PIPES PENETRATE WALLS, FLOORS, AND CEILINGS SHALL BE WATERTIGHT.

SANITARY PIPES SHALL BE OF HUBLESS CAST IRON OR PVC (SCHEDULE 40) AS APPROVED BY BUILDING OFFICIAL.

CONTRACTOR TO VERIFY AT SITE LOCATION, ALL EXISTING CONDITIONS, ELEVATIONS AND SIZE OF EXISTING MAINS, WATER AND SEWER FOR CONNECTION OF NEW SERVICES BEFORE INSTALLATION OF ANY PIPING.

PROTECT ALL FIXTURES AGAINST WATER HAMMER W/ APPROVED AIR CHAMBERS OR SHOCK ABSORBERS.

PROVIDE CONTROL VALVES TO ALL MAINS ENTERING THE BUILDING, RISERS, BRANCHES, GROUP OF FIXTURES, AND TO EACH PIECE OF EQUIPMENT.

PROVIDE FULLY ACCESSIBLE CLEANOUTS ON SANITARY AND ANY WASTE PIPING, AT EVERY CHANGE OF DIRECTION, AND AT BOTTOM OF STACKS. CLEANOUTS LOCATION AND SIZES ON HORIZONTAL LINES SHALL BE ACCORDING TO CODE.

VENT LINES TO EXTEND 6" MINIMUM ABOVE ROOF AND FLASH WITH LEAD.

PROVIDE AIR CHAMBERS AND SHUT OFF VALVES FOR ALL WATER SUPPLY PIPING AT FIXTURES. PROVIDE VACUUM BREAKER AND SHUT OFF VALVE ON ALL HOSE BIBS.

SANITARY PLUMBING PIPING TO HAVE MIN. 1/8" PER FT. PITCH AT ALL HORIZ. RUNS PROVIDE CLEANOUTS AT THE BASE OF WASTE STACKS.

ALL TUBS AND SHOWERS TO BE PROVIDED WITH ANTI-SCALD SHOWER VALVES.

ANCHORAGE

METAL AND WIRE LATH: PNEUMATICALLY FASTENED W/ "PNEU-FAST" 16 GA. STAPLE SPEC. #101-1, TYPE 1 OR BETTER (HOT DIPPED) SATIN FIN. GALVANIZED COATING, HAVING A TENSILE STRENGTH OF 130M PSI. FASTENERS SHALL BE MIN. 1 1/2" LONG, SPACED AT 6" O.C. MAX. & SIDE LAPS SHALL BE SECURED & 9" O.C. MAX.

ELECTRICAL NOTES

THE DWGS. ARE DIAGRAMMATIC & INDICATE THE GENERAL ARRANGEMENT OF THE ELECTRICAL WORK. ANY DISCREPANCIES ON THE DOCUMENTS SHALL BE CALLED TO THE ARCHITECT'S ATTENTION PRIOR TO THE COMMENCEMENT OF WORK. DO NOT SCALE ELECTRICAL DRAWINGS.

ALL WORK SHALL BE DONE IN ACCORDANCE WITH THE LATEST EDITION OF THE NATIONAL ELEC. CODE & ALL CODES, REGULATIONS & RESTRICTIONS HAVING JURISDICTIONS. AS PER FLORIDA BUILDING CODE

CONTRACTOR SHALL VERIFY WITH LOCAL ELECTRICAL UTILITY COMPANY THE SHALL LOCATE METER AND PANEL AS REQUIRED.

CONTRACTOR SHALL VERIFY ALL CONDUCTORS & BREAKERS W/ EQUIP. MFG. SPECIFICATIONS.

ELECTRICAL SYSTEM SHALL BE GROUNDED. PROVIDE PROPER SIZE & TYPE OF PROTECTION DEVICES TO MATCH EQUIPMENT BEING SERVED.

LOAD DATA IS BASED ON INFORMATION GIVEN TO ARCHITECT/ENGINEER AT TIME OF DESIGN. VERIFY ALL EQUIP. & PANEL SIZES PRIOR TO ORDERING.

ALL MATERIALS SHALL BE NEW AND BEAR U.L. LABELS, WHERE APPLICABLE.

ALL WORK SHALL BE DONE BY A LICENSED ELECTRICAL CONTRACTOR IN A FIRST CLASS WORKMANLIKE MANNER. THE COMPLETED SYSTEM SHALL BE FULLY OPERATIVE AND ACCEPTABLE TO THE ENGINEER/ARCHITECT.

ALL WORK SHALL BE COORDINATED WITH OTHER TRADES TO AVOID INTERFERENCE WITH PROGRESS OF CONSTRUCTION.

CONTRACTOR SHALL PROVIDE REQ'D. INSURANCE FOR THE PROTECTION AGAINST PUBLIC LIABILITY AND PROPERTY DAMAGE FOR THE DURATION OF THE WORK.

CIRCUITS SHOWN ON PLANS ARE TO DETERMINE LOAD DATA AND PANEL SIZES. THE CONTRACTOR SHALL PROVIDE CIRCUITS AND REQUIRED ROUTING OF CONDUITS TO SUIT JOB CONDITIONS AND BALANCE LOADS.

FURNISH AND INSTALL FIXTURES AS CALLED FOR ON PLANS OR AS SELECTED BY OWNER.

THE ELECTRICAL CONTRACTOR SHALL COORDINATE THE EXACT LOCATION OF ALL H.V.A.C. EQUIPMENT AND THEIR GIVEN LOAD WITH THE MECHANICAL CONTRACTOR BEFORE ROUGHING-IN FOR PROPER POWER AND WIRING CONTROL LAYOUT & INSTALLATION. DISCREPANCIES BETWEEN THE GIVEN & ACTUAL H.V.A.C. LOADS SHALL BE CORRECTED BEFORE ROUGHING IN.

GROUND-FAULT CIRCUIT PROTECTION; ALL 120V SINGLE PHASE, 15 & 20 AMP OUTLETS INSTALLED OUTDOORS, IN BATHROOMS, & GARAGES SHALL HAVE GFI CIRCUIT BREAKERS OR RECEPTACLES.

ALL BREAKERS SHALL HAVE 10,000 A.I.C. MINIMUM, U.O.N.

INSTALL FACILITIES FOR TEMPORARY CONSTRUCTION POWER AS REQUIRED.

ELECTRICAL CONTRACTOR SHALL NOTIFY ENGINEER/ARCHITECT IN WRITING OF ANY CONFLICT AND/OR DISCREPANCIES FOUND WITH WORK AS SHOWN, SPECIFIED OR IMPLIED ON THESE PLANS, PRIOR TO PROCEEDING W/ WORK.

CONTRACTOR SHALL VERIFY EXACT LOCATIONS OF FIXTURES AND OUTLETS AT JOB SITE BEFORE ROUGHING. CONTRACTOR MAY SELECT DIFFERENT MANUFACTURER OR FIXTURES WITH EQUAL SPECIFICATIONS.

SMOKE DETECTORS SHALL BE HARD WIRED (110 VOLT TYPE) TO NON-SWITCHABLE KITCHEN OR BATHROOM LIGHTING CIRCUIT AND SHALL NOT BE CONNECTED TO THE LOAD SIDE OF A GROUND FAULT CIRCUIT INTERRUPTER. SMOKE DETECTORS SHALL BE PROVIDED W/ VISIBLE "POWER ON INDICATOR" AND A TEST BUTTON WITH BATTERY BACKUP SYSTEM. MULTIPLE DETECTORS MUST BE INTERCONNECTED.

COORDINATE RACEWAY INSTALLATION W/ OTHER TRADES.

ALL ELECTRICAL SWITCHES SHALL BE 48" A.F.F. UNLESS OTHERWISE NOTED.

ALL WALL RECEPTACLES SHALL BE 12" A.F.F. UNLESS OTHERWISE NOTED.

SECURITY NOTES

ALL LOCKS ON EXTERIOR DOORS SHALL RESIST A FORCE OF 300 # APPLIED IN ANY MOVABLE DIRECTION.

ALL EXTERIOR LOCKS SHALL BE SINGLE CYLINDER W/ 1" THROW FOR 1 3/4" SOLID CORE DOOR.

ALL SINGLE EXTERIOR SWING DOORS SHALL HAVE A KEY OPERATED LOCK, OPERABLE FROM EXTERIOR WITH A MINIMUM 6000 POSSIBLE KEY CHANGES.

KEY ON KNOB LOCKS SHALL HAVE AN AUXILIARY DEAD BOLT W/ HARDENED BOLT OR WITH INSERT.

EXT. SWING DOORS SHALL BE SOLID CORE NOT LESS THAN 1 3/4" THICK.

FRONT MAIN ENTRANCE DOORS SHALL BE PROVIDED W/ A VISION SCOPE OR VISION PANEL.

HINGES ON OUT SWINGING EXTERIOR DOORS SHALL HAVE NON-EXPOSED SCREWS AND NON-REMOVABLE PINS.

SINGLE SWING EXTERIOR DOORS CONNECTING LIVING AREAS WITH GARAGE AREAS SHALL BE SOLID CORE 1 3/4" THICK AND SHALL BE SECURED WITH A LATCH AND SINGLE BOLT W/ ONE INCH MIN. THROW OR A COMBINATION OF DEAD BOLT AND DEAD LATCH SETS AND AN AUTOMATIC DOOR CLOSER.

ALL GLASS IN EXTERIOR DOORS SHALL COMPLY WITH ANSI 279.1

ALL WINDOWS (OPERABLE) SHALL WITHSTAND A FORCE OF 150# IN ANY OPERABLE DIRECTION.

SLIDING GLASS DOORS & WINDOWS SHALL BE INSTALLED & CONSTRUCTED SO THAT NO PANEL CAN BE LIFTED FROM THE TRACKS POSITION & SHALL COMPLY W/ THE A.A.M.A 1303-3 STANDARDS FOR FORCED ENTRY RESISTANCE.

SLIDING GLASS DOORS SHALL HAVE DEAD BOLT OR PIN SYSTEM NOT REMOVABLE FROM THE OUTSIDE AT THE JAMB AND SILL.

INTERIOR DOORS TO HAVE A CYLINDRICAL TYPE LOCK SETS W/ PRIVACY LOCK BY INSIDE PUSH BUTTON WHICH AUTOMATICALLY OPENS BY TURN OR CLOSING ACCORDING TO FED. SPEC. #160 AND 1511.

OVERHEAD DOORS SHALL BE PROVIDED WITH MULTIPLE POINT LOCKS OR BE LOCKED AT MORE THAN ONE POINT WITH HARDENED BOLTS WITH INSERTS ENGAGING AT LEAST TWO OPPOSITE POINTS A MIN. OF 5/8".

A.F.F.	Above Finished Floor
ACOUSTIC.	Acoustical
ALUM.	Aluminum
ANOD.	Anodized
BD.	Board
B.O.B.	Bottom of Beam
CAB.	Cabinet
CLG.	Ceiling
CLOS.	Closet
CLR.	Clear
CMU.	Concrete Masonry Unit
CNTR.	Counter
COL.	Column
CONC.	Concrete
CONN.	Connection
CONT.	Continuous
CT.	Ceramic Tile
DBL.	Double
DN.	Down
DR.	Door
DTL.	Detail
DWG.	Drawing
DWR.	Drawer
EA.	Each
EL.	Elevation
ELEC.	Electrical
ELEV.	Elevation
EQ.	Equal
MAX.	Maximum
MECH.	Mechanical
MIN.	Minimum
MISC.	Miscellaneous
MLD.	Molding
M.O.	Masonry Opening
M.T.	Metal Threshold
MTD.	Mounted
MTL.	Metal
MUL.	Mullion
NIC.	Not in Contract
NTS.	Not to Scale
O.C.	On Center
OD.	Outside Diameter
OPNG.	Opening
OPT.	Optional
PBD.	Particle Board
PL.	Plate
PLAM.	Plastic Laminate
PLYWD.	Plywood
PAL	Panel
P.O.S.	Point of Sale
PR.	Pair
PREP.	Preparation
PTD.	Painted
QT.	Quarry Tile
RA.	Return Air
RAD.	Radius
RE.	Reference
EQUIP.	Equipment
EXIST.	Existing
EXT.	Exterior
FBD.	Fiber Board
FBO.	Furnished by Others
FD.	Floor Drain
FE.	Fire Extinguisher
FF&E.	Furniture, Fixtures & Equipment
FIN.	Finish
FLR.	Floor
FRP.	Fiberglass Reinforced Plastic
FSE.	Food Service Equip.
F.V.	Field Verify
GA.	Gage
GALV.	Galvanized
GC.	General Contractor
GL.	Glass
GYP.BD.	Gypsum Board
INT.	Interior
HC.	Handicap Accessible
H.M.	Hollow Metal
HT.	Height
JST.	Joist
LAM.	Laminated
LAV.	Lavatory
MANUF.	Manufactured
RECEPT..	Receptacle
REINF.	Reinforced
REQ'D.	Required
RM.	Room
R.O.	Rough Opening
R.O.J.	Received on Job
S.C.	Solid Core
S/S	Stainless Steel
SCHED.	Schedule
SIM.	Similar
STD.	Standard
STL.	Steel
STRUCT.	Structural
SUSP.	Suspended
TEMP.	Tempered
TYP.	Typical
VCT.	Vinyl Composition Tile
VERT.	Vertical
VWC.	Vinyl Wall Covering
W/	With
W/O	Without
W.C.	Water Closet
WD.	Wood
W.H.	Water Heater
WIN.	Window
WSCT.	Wainscot
WT.	Weight
WWF.	Welded Wire Fabric

1 ABBREVIATIONS

BATHROOMS

PLUMBING FIXTURES SHALL BE INSTALLED AND SPACED IN A MANNER TO PERMIT EASY ACCESS FOR CLEANING AND FOR THE INTENDED USE, AND SHALL BE SET WITH THE MINIMUM CLEARANCES AS SETH FORTH IN F.B.C. 2014 PLUMBING CODE .

ALL MIRRORS EXCEEDING 9 SQUARE FEET INSTALLED IN VERTICAL WALLS SHALL BE SUPPORTED ON THE BOTTOM AND SHALL BE SECURELY AFFIXED TO THE WALL IN ACCORDANCE WITH THE MFR. SPECS.

TOILET ROOMS SHALL COMPLY WITH F.B.C. 2010 ED.
FLOORS SHALL BE OF IMPERVIOUS MATERIAL AS PER F.B.C. 2014 PLUMBING CODE .

ALL WATER CLOSETS, LAVATORIES, SHOWERHEADS, AND SINKS SHALL COMPLY WITH PLUMBING CODE OF THE F.B.C 2014 EDITION

WALL AND CEILING FINISHES NOTE:

1. WALL AND CEILING FINISHES SHALL HAVE A FLAME SPREAD INDEX NOT GREATER THAN 200 PER F.B.C. R302.9.1
2. WALL AND CEILING FINISHES SHALL HAVE A SMOKE DEVELOPED INDEX NOT GREATER THAN 450 AS PER F.B.C. R302.9.2
3. INSULATION MATERIALS SHALL HAVE A FLAME SPEAD INDEX OF NOT MORE THAN 25 & A SMOKE DEVELOPED INDEX OF NOT MORE THAN 450 PER R302.10.1 F.B.C.
4. FOAM PLASTIC INSULATION SHALL BE SEPARATED FROM THE INTERIOR OF BUILDING W/ A MIN. "GYP. BOARD OR OTHER APPROVED THERMAL BARRIER PER R316.4 (SEE WALL SECTION SHEET A-4)
5. FOAM PLASTIC INSULATION SHALL HAVE A FLAME SPREAD INDEX OF NOT MORE THAN 75 & A SMOKE DEVELOPED INDEX OF NOT MORE THAN 450 WHEN TESTED IN ACCORDANCE W/ ASTM E84 OR UL 723, PER R316.3 F.B.C. (SEE WALL SECTION SHEET A-4)

BELLON architecture

13131 S.W. 132 STREET
SUITE 104
MIAMI, FLORIDA 33186

T. (305) 278-7776
F. (305) 278-7473
WWW.BELLONMIAMI.COM
AA-26002616

ARCHITECTURE
LAND PLANNING
INTERIORS
CONSTRUCTION MANAGEMENT

CONSULTANTS

A CUSTOM RESIDENCE FOR:

Mr. AND MRS. R. SANCHEZ / NOLAN RODRIGUEZ

13940 OLD CUTTLER ROAD
PALMETTO BAY, FLORIDA

MARK	DATE	DESCRIPTION

PROJECT No. LB269
DRAWN BY: JP / AM
CHECKED BY: LB
DATE: 06-18-14

STATE OF FLORIDA
LEOPOLDO BELLON
10-27-14
REGISTERED ARCHITECT

LEOPOLDO BELLON, AIA (AR-6737)

SHEET TITLE

GENERAL NOTES

A-00

SHEET OF

AREA BREAKDOWN

A/C AREA:	5,505 S.F.
GARAGE :	458 S.F.
COVERED TERRACE :	887 S.F.
TOTAL CONSTRUCTION AREA:	6,850 S.F.

GARAGE NOTES

1. CEILING:
   PROVIDE 1 LAYER OF 5/8" TYPE "X" GYPSUM BOARD ON 1" x 3" FURRING STRIP @16" O.C., 5D CEMENT-COATED OR RING SHAKED NAILS 6" O.C. PAPER TAPE EMBEDDED IN CEMENTITIOUS COMPOUND OVER JOINTS AND EXPOSED NAILS HEADS COVERED WITH COMPOUND AND PRODUCT APPROVED INSULATION OF FIBERGLASS OR MINERAL WOOL BATS, OR BLOWN-IN FIBERGLASS, MINERAL WOOL OR CELLULOSIC INSULATION HAVING A MINIMUM INSULATION VALUE OF R-30.
2. PROVIDE SIGN @ GARAGE DOOR "DANGER" DO NOT OPERATE ENGINES WITH DOOR CLOSED. CARBON MONOXIDE EMISSION IS LETHAL.1/2" MIN. LETTERS
3. PROVIDE 2" X 6" P.T. WOOD JAMB BOLTED TO CONC. COLUMN WITH 1/2" DIA. x 6" ANCHOR BOLTS @ 24" O.C. FOR OVERHEAD DOOR RAIL, NOT MORE THAN 6" TOP & BOTTOM.
4. PROVIDE SCREENED VENTILATION @ BOTTOM PANEL OF GARAGE DOOR (AS REQUIRED).
5. RESIDENCE TO GARAGE DOOR TO BE PROVIDED WITH AUTO CLOSURE AND TO BE 20 MIN. FIRE RATED
6. OPENINGS FROM A PRIVATE GARAGE DIRECTLY INTO A ROOM USED FOR SLEEPING PURPOSES SHALL NOT BE PERMITTED. OTHER OPENINGS BETWEEN THE GARAGE AND RESIDENCE SHALL BE EQUIPPED WITH SOLID WOOD DOORS NOT LESS THAN 1 3/8 INCHES IN THICKNESS, SOLID OR HONEY COMB CORE STEEL DOORS NOT LESS THAN 1 3/8 INCHES THICK, OR 20 MINUTE FIRE RATED DOOR. AS PER 2014 F.B.C R 302.5.1
7. R-11 MIN INSULATION AT ADJACENT SPACES.

GENERAL NOTES

- 1 SHOWER & BATHTUB SHALL HAVE NON-ABSORBENT FLOOR & WALL FINISH UP TO 72" HEIGHT, AS PER F.B.C. R307.2
- 1a CERAMIC TILE WALL FINISH AND TUB SHOWER AREAS SHALL HAVE CEMENT FIBER OR GLASS MAT BACKING BOARD, AS PER F.B.C. R702.4.2
- 1b GLAZING WITHIN 60" OF FLOOR LEVEL IN WALLS SURROUNDING TUB OR SHOWER WITHIN 60" HORIZONTALLY OF TUB OR SHOWER SHALL BE SAFETY GLAZING CAT. II PER R4410.2.6.1 & R308.4.5 F.B.C.
- 1c SHOWER ENCLOSURE SHALL COMFORM TO THE SAFETY STANDARD FOR ARCH. GLAZING MATERIAL, CATEGORY II
- 2 VENT DRYER THRU WALL TO OUTSIDE.
- 3 1/2' GYPSUM BOARD ON METAL HI-HATS AT 16" O.C.
- 4 DESIGNATED EMERGENCY EGRESS DOOR SHALL BE LARGE MISSILE IMPACT RESISTANT, AS PER F.B.C. R310.4 & R4410.4
- 5 ALL INSULATION MATERIAL SHALL HAVE A FLAME SPREAD INDEX OF NOT MORE THAN 25 AND A SMOKE-DEVELOPED INDEX NOT TO EXCEED 450 WHEN TESTED AS PER ASTM E 84 OR UL 723 - FBC R302.10.1
- 6 LANDINGS OR FLOORS AT THE REQUIRED EGRESS DOOR SHALL NOT BE MORE THAN 1 1/2" LOWER THAN THE TOP OF THE TRESHOLD.

NOTE:

ALL WINDOWS AND GLASS DOORS SHALL BE IMPACT RESISTANT HURRICANE RATED AS PER MIAMI DADE COUNTY PRODUCT CONTROL APPROVALS

ATTIC VENT CALCULATION FIRST FLOOR

(F.B.C 2014 ED R4409.13.3.2) (COVERED TERRACE)

$\frac{\text{ROOF AREA}}{150} = \frac{1,667}{150} = 11.11'$ S.F REQ VENT

ROOF PERIMETER = 167.5'

- PROVIDE A 2" WIDE CONTINUOUS ATTIC VENTILATION

167.5' L.F x .16 = 26.80' S.F

- SCREEN OPENING AT ATTIC VENTS MAY NOT EXCEED 1/8" - FBC R4409.13.3.2.3.

ATTIC VENT CALCULATION FIRST FLOOR

(F.B.C 2014 ED R4409.13.3.2)

$\frac{\text{ROOF AREA}}{150} = \frac{6,928}{150} = 46.19'$ S.F REQ VENT

ROOF PERIMETER = 379.6'

- PROVIDE A 2" WIDE CONTINUOUS ATTIC VENTILATION

379.6' L.F x .16 = 60.73' S.F

- SCREEN OPENING AT ATTIC VENTS MAY NOT EXCEED 1/8" - FBC R4409.13.3.2.3.

COMPONENTS OF MEANS OF ESCAPE:

(A) NO DOOR IN THE PATH OF TRAVEL OF MEANS OF ESCAPE SHALL BE LESS THAN 2-8" WIDE, EXCEPT THAT BATHROOM DOORS MAY BE 24" WIDE UNLESS A LARGER DOOR OPENING IS REQUIRED TO SATISFY REQUIREMENTS OF F.B.C.

(B) EVERY CLOSET DOOR LATCH SHALL BE SUCH THAT CHILDREN CAN OPEN THE DOOR FROM INSIDE THE CLOSET.

(C) EVERY BATHROOM DOOR LOCK SHALL BE DESIGNED TO PERMIT THE OPENING OF THE LOCKED DOOR FROM THE OUTSIDE IN AN EMERGENCY.

(D) DOORS MAY BE SWINGING OR SLIDING AND ARE EXEMPT FROM THE REQUIREMENTS OF PARAGRAPH 3103.2(C) F.B.C.

(E) NO DOOR IN ANY MEANS OF ESCAPE SHALL BE LOCKED AGAINST EGRESS WHEN THE BUILDING IS OCCUPIED. ALL LOCKING DEVICES WHICH IMPEDE OR PROHIBIT EGRESS OR WHICH CANNOT BE EASILY DISENGAGED SHALL BE PROHIBITED.

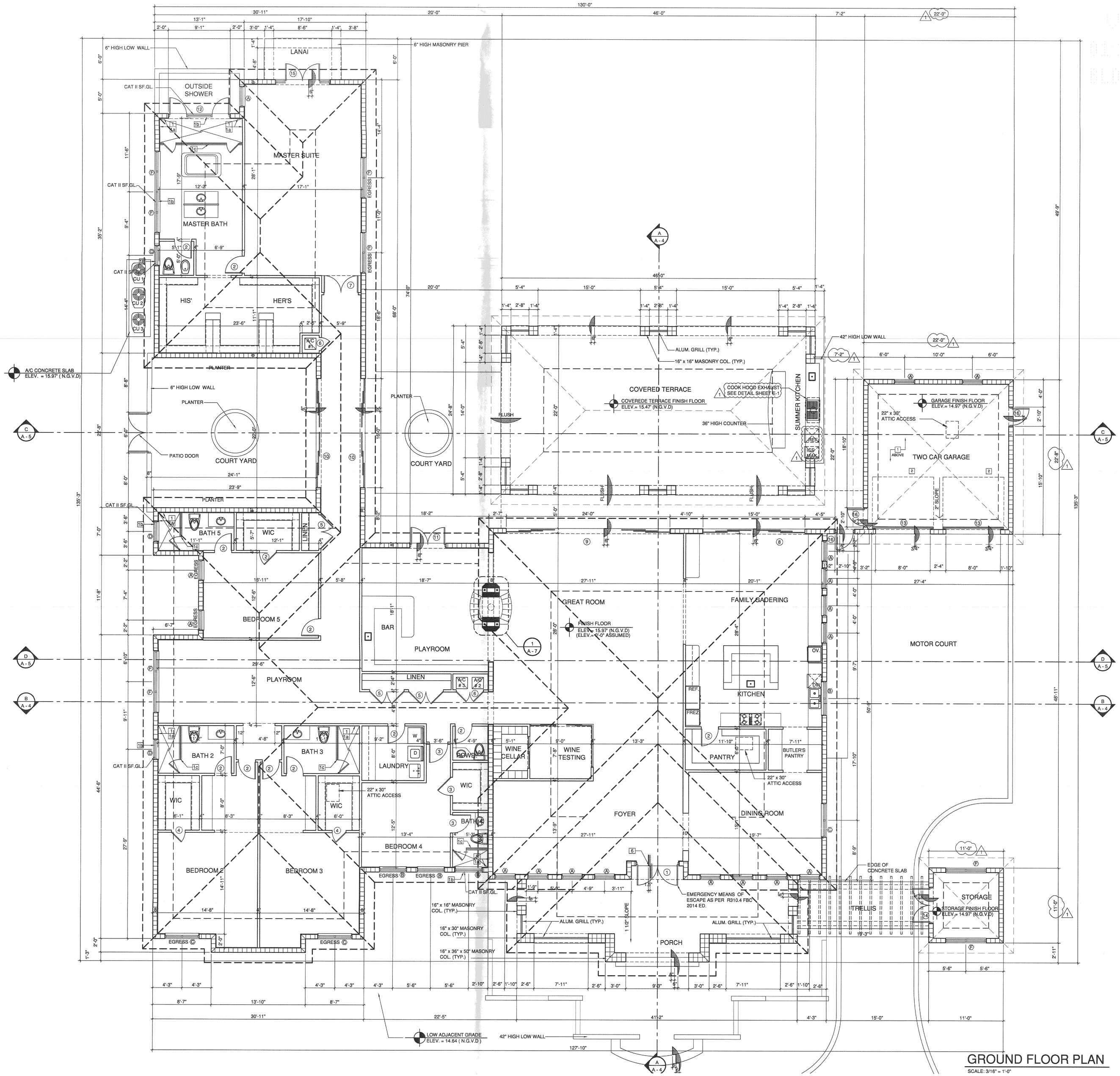

GROUND FLOOR PLAN

SCALE: 3/16" = 1'-0"

BELLÓN architecture

13131 S.W. 132 STREET
SUITE 104
MIAMI, FLORIDA 33186
T. (305) 278-7776
F. (305) 278-7473
WWW.BELLONMIAMI.COM
AA-26002616

ARCHITECTURE
LAND PLANNING
INTERIORS
CONSTRUCTION MANAGEMENT

CONSULTANTS

A CUSTOM RESIDENCE FOR:

Mr. AND MRS. R. SANCHEZ / NOLAN RODRIGUEZ

13940 OLD CUTTLER ROAD
PALMETTO BAY, FLORIDA

MARK	DATE	DESCRIPTION
1	12-17-15	B.D.C

PROJECT No. LB269
DRAWN BY: JP / AM
CHECKED BY: LB
DATE: 06-18-14

STATE OF FLORIDA · LEOPOLDO BELLON · AR0008737

LEOPOLDO BELLON, AIA (AR-6737)

SHEET TITLE

FLOOR PLAN

A-1

SHEET OF

AREA BREAKDOWN

A/C AREA:	6,600 S.F.
GARAGE :	650 S.F.
COVERED TERRACE :	1,130 S.F.
TOTAL CONSTRUCTION AREA:	8,380 S.F.

GARAGE NOTES

1. CEILING:
PROVIDE 1 LAYER OF 5/8" TYPE "X" GYPSUM BOARD ON 1" x 3" FURRING STRIP @16" O.C., 5D CEMENT-COATED OR RING SHAKED NAILS 6" O.C. PAPER TAPE EMBEDDED IN CEMENTITIOUS COMPOUND OVER JOINTS AND EXPOSED NAILS HEADS COVERED WITH COMPOUND AND PRODUCT APPROVED INSULATION OF FIBERGLASS OR MINERAL WOOL BATS, OR BLOWN-IN FIBERGLASS, MINERAL WOOL OR CELLULOSIC INSULATION HAVING A MINIMUM INSULATION VALUE OF R-30.

2. PROVIDE SIGN @ GARAGE DOOR "DANGER" DO NOT OPERATE ENGINES WITH DOOR CLOSED. CARBON MONOXIDE EMISSION IS LETHAL,1/2" MIN. LETTERS

3. PROVIDE 2" X 6" P.T. WOOD JAMB BOLTED TO CONC. COLUMN WITH 1/2" DIA. x 6" ANCHOR BOLTS @ 24" O.C. FOR OVERHEAD DOOR RAIL, NOT MORE THAN 6" TOP & BOTTOM.

4. PROVIDE SCREENED VENTILATION @ BOTTOM PANEL OF GARAGE DOOR (AS REQUIRED).

5. RESIDENCE TO GARAGE DOOR TO BE PROVIDED WITH AUTO CLOSURE AND TO BE 20 MIN. FIRE RATED

6. OPENINGS FROM A PRIVATE GARAGE DIRECTLY INTO A ROOM USED FOR SLEEPING PURPOSES SHALL NOT BE PERMITTED. OTHER OPENINGS BETWEEN THE GARAGE AND RESIDENCE SHALL BE EQUIPPED WITH SOLID WOOD DOORS NOT LESS THAN 1 3/8 INCHES IN THICKNESS, SOLID OR HONEY COMB CORE STEEL DOORS NOT LESS THAN 1 3/8 INCHES THICK, OR 20 MINUTE FIRE RATED DOOR. AS PER 2014 F.B.C R 302.5.1

7. R-11 MIN INSULATION AT ADJACENT SPACES.

GENERAL NOTES

1 SHOWER & BATHTUB SHALL HAVE NON-ABSORBENT FLOOR & WALL FINISH UP TO 72" HEIGHT, AS PER F.B.C. R307.2

1a CERAMIC TILE WALL FINISH AND TUB SHOWER AREAS SHALL HAVE CEMENT FIBER OR GLASS MAT BACKING BOARD, AS PER F.B.C. R702.4.2

1b GLAZING WITHIN 60" OF FLOOR LEVEL IN WALLS SURROUNDING TUB OR SHOWER WITHIN 60" HORIZONTALLY OF TUB OR SHOWER SHALL BE SAFETY GLAZING CAT. II PER R4410.2.6.1 & R308.4.5 F.B.C.

1c SHOWER ENCLOSURE SHALL COMFORM TO THE SAFETY STANDARD FOR ARCH. GLAZING MATERIAL, CATEGORY II

2 VENT DRYER THRU WALL TO OUTSIDE.

3 1/2' GYPSUM BOARD ON METAL HI-HATS AT 16" O.C.

4 DESIGNATED EMERGENCY EGRESS DOOR SHALL BE LARGE MISSILE IMPACT RESISTANT, AS PER F.B.C. R310.4 & R4410.4

5 ALL INSULATION MATERIAL SHALL HAVE A FLAME SPREAD INDEX OF NOT MORE THAN 25 AND A SMOKE-DEVELOPED INDEX NOT TO EXCEED 450 WHEN TESTED AS PER ASTM E 84 OR UL 723 - FBC R302.10.1

6 LANDINGS OR FLOORS AT THE REQUIRED EGRESS DOOR SHALL NOT BE MORE THAN 1 1/2" LOWER THAN THE TOP OF THE TRESHOLD.

NOTE:

ALL WINDOWS AND GLASS DOORS SHALL BE IMPACT RESISTANT HURRICANE RATED AS PER MIAMI DADE COUNTY PRODUCT CONTROL APPROVALS

ATTIC VENT CALCULATION FIRST FLOOR

(F.B.C 2014 ED R4409.13.3.2) (COVERED TERRACE)

ROOF AREA / 150 = 1,667 / 150 = 11.11' S.F REQ VENT

ROOF PERIMETER = 167.5'

- PROVIDE A 2" WIDE CONTINUOUS ATTIC VENTILATION

167.5' L.F x .16 = 26.80' S.F

- SCREEN OPENING AT ATTIC VENTS MAY NOT EXCEED 1/8" - FBC R4409.13.3.2.3.

ATTIC VENT CALCULATION FIRST FLOOR

(F.B.C 2014 ED R4409.13.3.2)

ROOF AREA / 150 = 6,928 / 150 = 46.19' S.F REQ VENT

ROOF PERIMETER = 379.6'

- PROVIDE A 2" WIDE CONTINUOUS ATTIC VENTILATION

379.6' L.F x .16 = 60.73' S.F

- SCREEN OPENING AT ATTIC VENTS MAY NOT EXCEED 1/8" - FBC R4409.13.3.2.3.

COMPONENTS OF MEANS OF ESCAPE:

(A) NO DOOR IN THE PATH OF TRAVEL OF MEANS OF ESCAPE SHALL BE LESS THAN 2-8" WIDE, EXCEPT THAT BATHROOM DOORS MAY BE 24" WIDE UNLESS A LARGER DOOR OPENING IS REQUIRED TO SATISFY REQUIREMENTS OF F.B.C.

(B) EVERY CLOSET DOOR LATCH SHALL BE SUCH THAT CHILDREN CAN OPEN THE DOOR FROM INSIDE THE CLOSET.

(C) EVERY BATHROOM DOOR LOCK SHALL BE DESIGNED TO PERMIT THE OPENING OF THE LOCKED DOOR FROM THE OUTSIDE IN AN EMERGENCY.

(D) DOORS MAY BE SWINGING OR SLIDING AND ARE EXEMPT FROM THE REQUIREMENTS OF PARAGRAPH 3103.2(C) F.B.C.

(E) NO DOOR IN ANY MEANS OF ESCAPE SHALL BE LOCKED AGAINST EGRESS WHEN THE BUILDING IS OCCUPIED. ALL LOCKING DEVICES WHICH IMPEDE OR PROHIBIT EGRESS OR WHICH CANNOT BE EASILY DISENGAGED SHALL BE PROHIBITED.

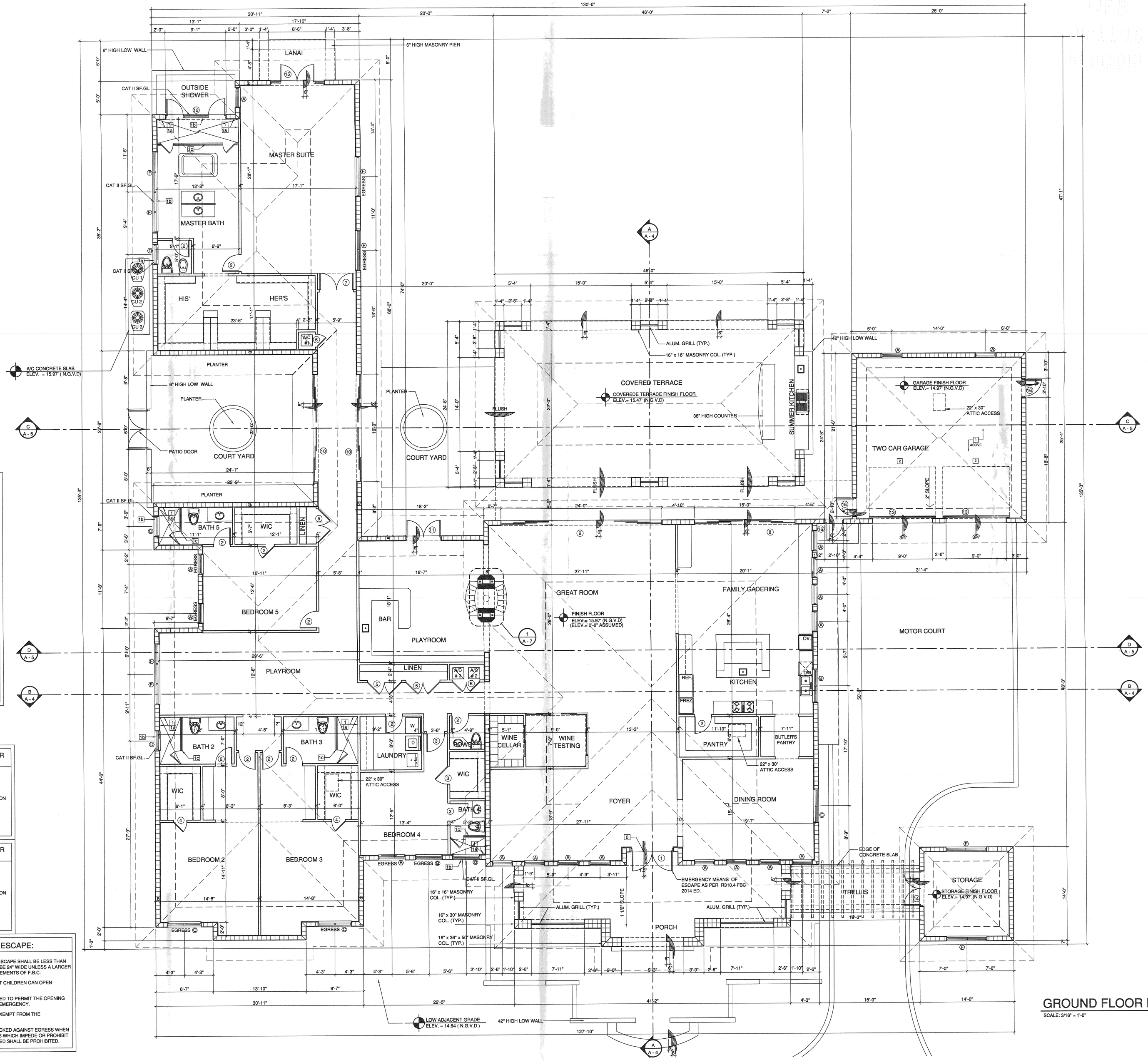

GROUND FLOOR PLAN

SCALE: 3/16" = 1'-0"

BELLO architecture

13131 S.W. 132 STREET
SUITE 104
MIAMI, FLORIDA 33186

T. (305) 278-7776
F. (305) 278-7473
WWW.BELLOMILANES.COM
AA-26002616

ARCHITECTURE
LAND PLANNING
INTERIORS
CONSTRUCTION MANAGEMENT

CONSULTANTS

A CUSTOM RESIDENCE FOR:

Mr. AND MRS. R. SANCHEZ / NOLAN RODRIGUEZ

13940 OLD CUTLER ROAD
PALMETTO BAY, FLORIDA

MARK	DATE	DESCRIPTION

PROJECT No. LB269
DRAWN BY: JP / AM
CHECKED BY: LB
DATE: 06-18-14

STATE OF FLORIDA · LEOPOLDO BELLON · LICENSE 10 27 11 · REGISTERED ARCHITECT

LEOPOLDO BELLON, AIA (AR-6737)

SHEET TITLE

FLOOR PLAN

A-1

SHEET OF

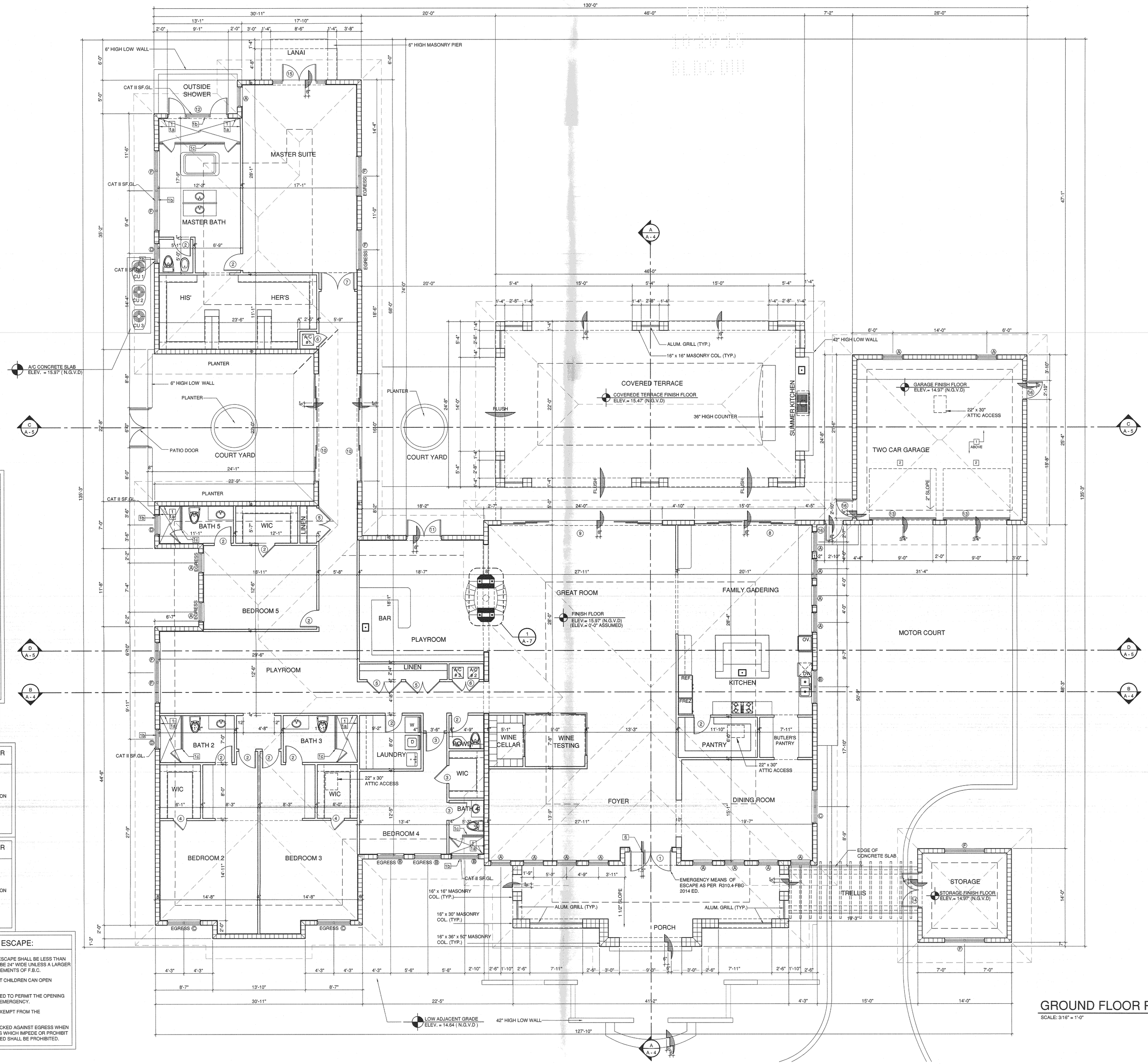

AREA BREAKDOWN

A/C AREA:	6,600 S.F.
GARAGE :	650 S.F.
COVERED TERRACE :	1,130 S.F.
TOTAL CONSTRUCTION AREA:	8,380 S.F.

GARAGE NOTES

1. CEILING:
   PROVIDE 1 LAYER OF 5/8" TYPE "X" GYPSUM BOARD ON 1" x 3" FURRING STRIP @16" O.C., 5D CEMENT-COATED OR RING SHAKED NAILS 6" O.C. PAPER TAPE EMBEDDED IN CEMENTITIOUS COMPOUND OVER JOINTS AND EXPOSED NAILS HEADS COVERED WITH COMPOUND AND PRODUCT APPROVED INSULATION OF FIBERGLASS OR MINERAL WOOL BATS, OR BLOWN-IN FIBERGLASS, MINERAL WOOL OR CELLULOSIC INSULATION HAVING A MINIMUM INSULATION VALUE OF R-30.
2. PROVIDE SIGN @ GARAGE DOOR "DANGER" DO NOT OPERATE ENGINES WITH DOOR CLOSED. CARBON MONOXIDE EMISSION IS LETHAL,1/2" MIN. LETTERS
3. PROVIDE 2" X 6" P.T. WOOD JAMB BOLTED TO CONC. COLUMN WITH 1/2" DIA. x 6" ANCHOR BOLTS @ 24" O.C. FOR OVERHEAD DOOR RAIL, NOT MORE THAN 6" TOP & BOTTOM.
4. PROVIDE SCREENED VENTILATION @ BOTTOM PANEL OF GARAGE DOOR (AS REQUIRED).
5. RESIDENCE TO GARAGE DOOR TO BE PROVIDED WITH AUTO CLOSURE AND TO BE 20 MIN. FIRE RATED
6. OPENINGS FROM A PRIVATE GARAGE DIRECTLY INTO A ROOM USED FOR SLEEPING PURPOSES SHALL NOT BE PERMITTED. OTHER OPENINGS BETWEEN THE GARAGE AND RESIDENCE SHALL BE EQUIPPED WITH SOLID WOOD DOORS NOT LESS THAN 1 3/8 INCHES IN THICKNESS, SOLID OR HONEY COMB CORE STEEL DOORS NOT LESS THAN 1 3/8 INCHES THICK, OR 20 MINUTE FIRE RATED DOOR. AS PER 2014 F.B.C R 302.5.1
7. R-11 MIN INSULATION AT ADJACENT SPACES.

GENERAL NOTES

1 SHOWER & BATHTUB SHALL HAVE NON-ABSORBENT FLOOR & WALL FINISH UP TO 72" HEIGHT, AS PER F.B.C. R307.2

1a CERAMIC TILE WALL FINISH AND TUB SHOWER AREAS SHALL HAVE CEMENT FIBER OR GLASS MAT BACKING BOARD, AS PER F.B.C. R702.4.2

1b GLAZING WITHIN 60" OF FLOOR LEVEL IN WALLS SURROUNDING TUB OR SHOWER WITHIN 60" HORIZONTALLY OF TUB OR SHOWER SHALL BE SAFETY GLAZING CAT. II PER R4410.2.6.1 & R308.4.5 F.B.C.

1c SHOWER ENCLOSURE SHALL COMFORM TO THE SAFETY STANDARD FOR ARCH. GLAZING MATERIAL, CATEGORY II

2 VENT DRYER THRU WALL TO OUTSIDE.

3 1/2' GYPSUM BOARD ON METAL HI-HATS AT 16" O.C.

4 DESIGNATED EMERGENCY EGRESS DOOR SHALL BE LARGE MISSILE IMPACT RESISTANT, AS PER F.B.C. R310.4 & R4410.4

5 ALL INSULATION MATERIAL SHALL HAVE A FLAME SPREAD INDEX OF NOT MORE THAN 25 AND A SMOKE-DEVELOPED INDEX NOT TO EXCEED 450 WHEN TESTED AS PER ASTM E 84 OR UL 723 - FBC R302.10.1

6 LANDINGS OR FLOORS AT THE REQUIRED EGRESS DOOR SHALL NOT BE MORE THAN 1 1/2" LOWER THAN THE TOP OF THE TRESHOLD.

NOTE:

ALL WINDOWS AND GLASS DOORS SHALL BE IMPACT RESISTANT HURRICANE RATED AS PER MIAMI DADE COUNTY PRODUCT CONTROL APPROVALS

ATTIC VENT CALCULATION FIRST FLOOR

(F.B.C 2014 ED R4409.13.3.2) (COVERED TERRACE)

$\frac{\text{ROOF AREA}}{150} = \frac{1,667}{150} = 11.11'$ S.F REQ VENT

ROOF PERIMETER = 167.5'

- PROVIDE A 2" WIDE CONTINUOUS ATTIC VENTILATION

167.5' L.F x .16 = 26.80' S.F

- SCREEN OPENING AT ATTIC VENTS MAY NOT EXCEED 1/8" - FBC R4409.13.3.2.3.

ATTIC VENT CALCULATION FIRST FLOOR

(F.B.C 2014 ED R4409.13.3.2)

$\frac{\text{ROOF AREA}}{150} = \frac{6,928}{150} = 46.19'$ S.F REQ VENT

ROOF PERIMETER = 379.6'

- PROVIDE A 2" WIDE CONTINUOUS ATTIC VENTILATION

379.6' L.F x .16 = 60.73' S.F

- SCREEN OPENING AT ATTIC VENTS MAY NOT EXCEED 1/8" - FBC R4409.13.3.2.3.

COMPONENTS OF MEANS OF ESCAPE:

(A) NO DOOR IN THE PATH OF TRAVEL OF MEANS OF ESCAPE SHALL BE LESS THAN 2-8" WIDE, EXCEPT THAT BATHROOM DOORS MAY BE 24" WIDE UNLESS A LARGER DOOR OPENING IS REQUIRED TO SATISFY REQUIREMENTS OF F.B.C.

(B) EVERY CLOSET DOOR LATCH SHALL BE SUCH THAT CHILDREN CAN OPEN THE DOOR FROM INSIDE THE CLOSET.

(C) EVERY BATHROOM DOOR LOCK SHALL BE DESIGNED TO PERMIT THE OPENING OF THE LOCKED DOOR FROM THE OUTSIDE IN AN EMERGENCY.

(D) DOORS MAY BE SWINGING OR SLIDING AND ARE EXEMPT FROM THE REQUIREMENTS OF PARAGRAPH 3103.2(C) F.B.C.

(E) NO DOOR IN ANY MEANS OF ESCAPE SHALL BE LOCKED AGAINST EGRESS WHEN THE BUILDING IS OCCUPIED. ALL LOCKING DEVICES WHICH IMPEDE OR PROHIBIT EGRESS OR WHICH CANNOT BE EASILY DISENGAGED SHALL BE PROHIBITED.

GROUND FLOOR PLAN

SCALE: 3/16" = 1'-0"

BELLÓN architecture

13131 S.W. 132 STREET
SUITE 104
MIAMI, FLORIDA 33186

T. (305) 278-7776
F. (305) 278-7473
WWW.BELLONMIAMI.COM
AA-26002616

ARCHITECTURE
LAND PLANNING
INTERIORS
CONSTRUCTION MANAGEMENT

CONSULTANTS

A CUSTOM RESIDENCE FOR:

Mr. AND MRS. R. SANCHEZ / NOLAN RODRIGUEZ

13940 OLD CUTTLER ROAD
PALMETTO BAY, FLORIDA

MARK	DATE	DESCRIPTION

PROJECT No. LB289
DRAWN BY: JP / AM
CHECKED BY: LB
DATE: 06-18-14

STATE OF FLORIDA LEOPOLDO BELLON REGISTERED

LEOPOLDO BELLON, AIA (AR-6737)

SHEET TITLE
FLOOR PLAN

A-1

SHEET OF

WINDOW NOTES

1. ALL WINDOWS TO BE IMPACT RESISTANT & MEET ASCE 7-94 WIND LOADS, MF'R TO SUPPLY DADE COUNTY APPROVAL LETTERS & SHOP DRAWINGS. ALL WINDOWS TO BE DADE COUNTY APPROVED + COMPLIANT WITH ALL APPLICABLE CODES.
2. ALL WINDOWS TO BE ESP WHITE FINISH WITH LIGHT GRAY TINTED IMPACT RESISTANT GLASS.
3. ALL EXTERIOR GLASS SHALL BE 9/16" LAMINATED GLASS (IMPACT RESISTANT) AS FOLLOWS:
   1/4" TEMPERED GRAY TINTED GLASS (SHADING COEFFICIENT 0.43) ON A PVB CLEAR INTER LAYER ON 1/4" CLEAR GLASS.
4. ALL DIMENSIONS SHOW ARE WINDOW UNIT SIZES, CONTRACTOR TO VERIFY ALL MASONRY ROUGH OPENINGS DIMENSIONS WITH MANUFACTURER PRIOR TO FABRICATING WINDOWS. (TYPICAL)
5. FOR SAFETY GLAZING WINDOW, A SAFETY GLAZING MUST MEET OR EXCEED ANSI Z97.1-1984 AS PER FBC 1617.4.6.3 LAS EDITION.

DOOR NOTES

1. ALL HARDWARE SHALL BE FURNISHED AND INSTALLED BY THE GENERAL CONTRACTOR.
2. INTERIOR DOOR, UNLESS OTHERWISE NOTED, SHALL BE GRADE.
3. PROVIDE WALL & FLOOR STOPS AS REQUIRED. PROVIDE SILENCERS TO ALL METAL FRAMES.
4. HOLLOW METAL DOOR TO BE 16 GAUGE.
5. PRODUCT APPROVAL PER WINDOWS / STORE FRONTS MUST BE SUBMITTED TO BUILDING DEPARTMENT FOR APPROVAL PRIOR TO INSPECTION OF SUCH PRODUCTS. ALSO SHALL BE DESIGNED TO MEET WIND PRESSURE AS PER ASCE 7-94.
6. UNLESS NOTED OTHERWISE, INTERIOR DOORS ARE WOOD OR MASONITE, EXTERIOR DOORS ARE METAL.
7. SLIDING DOOR WITH NOMINAL 32" CLEAR OPENING TO BE PROVIDED BY MANUFACTURER.
8. ALL STEEL FRAMES ARE GALVANIZED PRIMED AND PAINTED.
9. ALL WINDOWS AND EXTERIOR GLASS DOORS SHALL HAVE IMPACT RESISTANCE GLASS.
10. FIRE DOORS AND FRAMES SHALL BE U.L. "B" LABEL RATED 1-1/2 HOURS.
11. ALL EXTERIOR DOORS TO HAVE WATER STRIP: 399 AV. VINYL DORBIN OR APPROVED EQUAL.
12. HINGES AT EXTERIOR METAL DOORS TO BE NON-REMOVABLE PIN WITH SECURITY STUDS TYPE.
13. REFER TO SPECIFICATIONS FOR HARDWARE SCHEDULE AND ADDITIONAL INFO.
14. ALL EXTERIOR DOORS TO BE DADE COUNTY PRODUCT APPROVED.

DOOR LEGEND

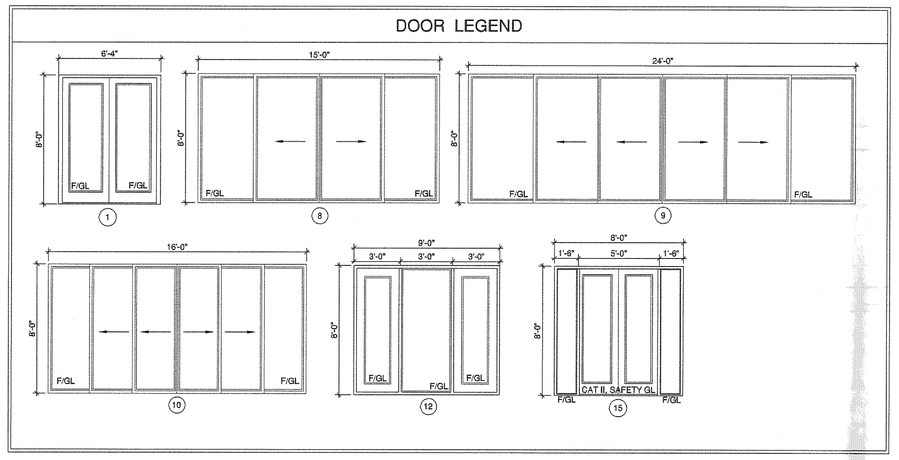

WINDOW LEGEND

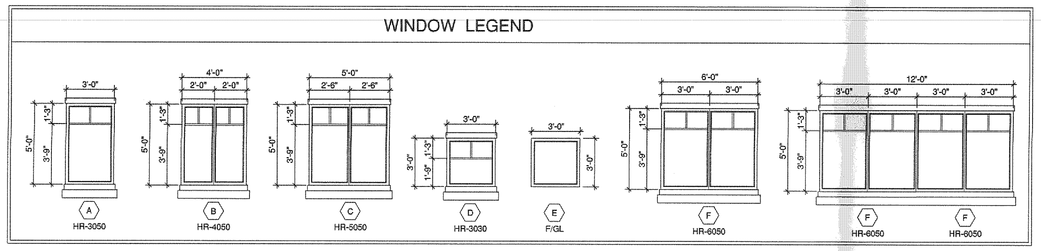

NOTE:
ALL WINDOW DIMENSIONS ARE APPROXIMATE. WINDOW CONTRACTOR SHALL VERIFY ALL WINDOW ROUGH OPENINGS PRIOR TO FABRICATION. PROVIDE SHOP DRAWINGS FOR ARCHITECT APPROVAL.

WINDOW SCHEDULE

NO.	TYPE	MODULAR SIZES W	MODULAR SIZES H	REMARKS
A	HR 3050	36"	60"	CAT. II SAFETY GLASS
B	HR 4050	48"	60"	CAT. II SAFETY GLASS
C	HR 5050	60"	60"	CAT. II SAFETY GLASS
D	HR 3030	36"	36"	CAT. II SAFETY GLASS
E	FIXED GLASS	36"	36"	CAT. II SAFETY GLASS
F	HR 6050	72"	60"	CAT. II SAFETY GLASS

U FACTOR 1.06 SHGC - 0.43

FINISH SCHEDULE

ROOM	FLOOR	BASE	WALL	CEILING	CLG. HT.	REMARKS
PORCH	TILE	STUCCO	STUCCO	———	AS PER PLANS	
FOYER	TILE	WOOD	GYP. BRD.	GYP. BRD.	AS PER PLANS	
FAMILY GARDERING	TILE	WOOD	GYP. BRD.	GYP. BRD.	AS PER PLANS	
DINING ROOM	TILE	WOOD	GYP. BRD.	GYP. BRD.	AS PER PLANS	
GREAT ROOM	TILE	WOOD	GYP. BRD.	GYP. BRD.	AS PER PLANS	
KITCHEN	TILE	WOOD	GYP. BRD.	GYP. BRD.	AS PER PLANS	
PANTRY	TILE	WOOD	GYP. BRD.	GYP. BRD.	AS PER PLANS	
BUTLER'S PANTRY	TILE	WOOD	GYP. BRD.	GYP. BRD.	AS PER PLANS	
POWDER ROOM	TILE	TILE	GYP. BRD.	GYP. BRD.	AS PER PLANS	
COVERED TERRACE	N/A	STUCCO	N/A	N/A	N/A	
LAUNDRY	TILE	WOOD	GYP. BRD.	GYP. BRD.	AS PER PLANS	
WIC / HIS / HER'S	WOOD	WOOD	GYP. BRD.	GYP. BRD.	AS PER PLANS	
MASTER SUITE	WOOD	WOOD	GYP. BRD.	GYP. BRD.	AS PER PLANS	
MASTER BATHROOM	TILE	TILE	GYP. BRD.	GYP. BRD.	AS PER PLANS	
BEDROOM 2,3,4,5	WOOD	WOOD	GYP. BRD.	GYP. BRD.	AS PER PLANS	
BATH 2, 3, 4, 5	TILE	TILE	GYP. BRD.	GYP. BRD.	AS PER PLANS	
PLAYROOM	TILE	WOOD	GYP. BRD.	GYP. BRD.	AS PER PLANS	
WINE CELLAR / WINE TESTING	TILE	WOOD	GYP. BRD.	GYP. BRD.	AS PER PLANS	
GARAGES/ STORAGE	N/A	N/A	N/A	N/A	N/A	

DOOR SCHEDULE

No.	LOCATION	SIZE WIDTH	SIZE HEIGHT	SIZE THICK	TYPE	MATERIAL	FINISH	THRESHOLD	JAMB	REMARKS
1	ENTRY	2-3'-0"	8'-0"	1 3/4"	SWING (DBL.)	METAL/GLASS	FAC. FIN.	METAL	METAL	CAT. II SAFETY GLASS
2	MASTER BATH / BATH 2,3,5 / WIC BEDROOM 5 / BEDROOM 2,3,5 / LAUNDRY / PANTRY / POWDER	2'-6"	8'-0"	1 3/4"	PRE-HUNG	WOOD	PAINTED	———	WOOD	
3	BEDROOM 4 / BATH 4 / WIC BEDROOM 4	2'-8"	8'-0"	1 3/4"	PRE-HUNG	WOOD	PAINTED	———	WOOD	HANDICAP ACCESS
4	W.I.C. BEDROOM 2, 3	2'-0"	8'-0"	1 3/4"	PRE-HUNG	WOOD	PAINTED	———	WOOD	
5	LINEN	2-2'-0"	8'-0"	1 3/4"	PRE-HUNG	WOOD	PAINTED	———	WOOD	
6	A/C	2-2'-0"	8'-0"	1 3/4"	PRE-HUNG	WOOD	PAINTED	———	WOOD	LOUVERED
7	MASTER SUITE	2-2'-6"	8'-0"	1 3/4"	SWING (DBL.)	WOOD		———	WOOD	
8	FAMILY GADERING	11'-0"	8'-0"	1 3/4"	SLIDING	METAL/GLASS	FAC. FIN.	METAL	METAL	CAT. II SAFETY GLASS / SEE DETAIL THIS SHEET
9	GREAT ROOM	24'-0"	8'-0"	1 3/4"	SLIDING	METAL/GLASS	FAC. FIN.	METAL	METAL	CAT. II SAFETY GLASS
10	HALL	16'-0"	8'-0"	1 3/4"	SLIDING	METAL/GLASS	FAC. FIN.	METAL	METAL	CAT. II SAFETY GLASS
11	PLAY ROOM	2-2'-6"	8'-0"	1 3/4"	SWING (DBL.)	METAL/GLASS	FAC. FIN.	METAL	METAL	CAT. II SAFETY GLASS W
12	MASTER BATH	2-2'-0"	8'-0"	1 3/4"		METAL/GLASS	FAC. FIN.	METAL	METAL	CAT. II SAFETY GLASS / SEE DETAIL THIS SHEET
13	GARAGE	9'-0"	8'-0"	1 3/4"	OVERHEAD	METAL		———	WOOD	GARAGE DOOR
14	STORAGE	2-2'-6"	8'-0"	1 3/4"	SWING (DBL.)	METAL/GLASS	FAC. FIN.	METAL	METAL	CAT. II SAFETY GLASS
15	MASTER SUITE	2-2'-6"	9'-0"	1 3/4"	SWING (DBL.)	METAL/GLASS	FAC. FIN.	METAL	METAL	CAT. II SAFETY GLASS W/ SIDELIGHTS / SEE DETAIL THIS SHEET
16	GARAGE / EXT. CORRIDOR	2'-8"	8'-0"	1 3/4"	METAL CLAD	METAL		———	METAL	

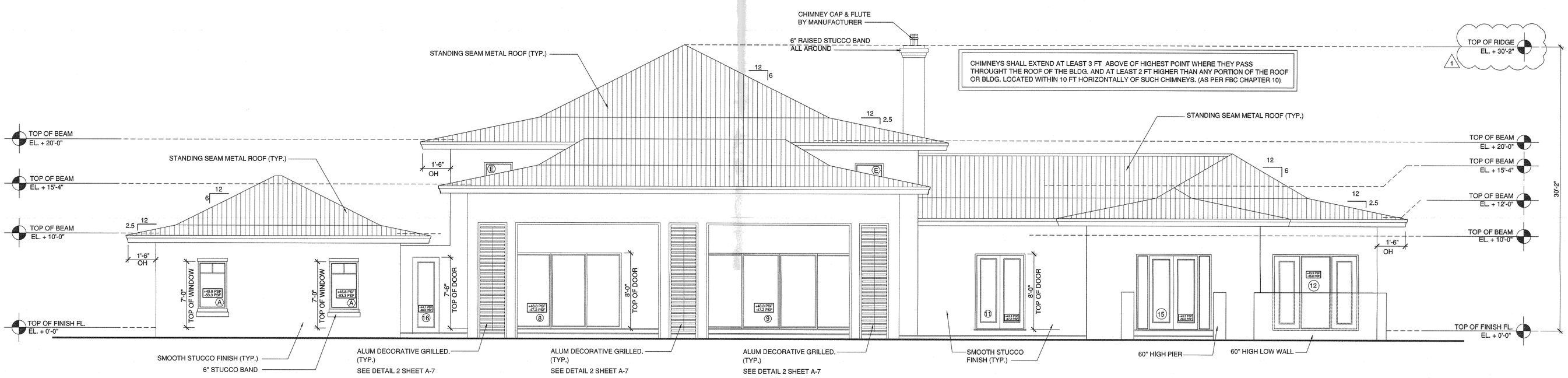

CHIMNEYS SHALL EXTEND AT LEAST 3 FT ABOVE OF HIGHEST POINT WHERE THEY PASS THROUGHT THE ROOF OF THE BLDG. AND AT LEAST 2 FT HIGHER THAN ANY PORTION OF THE ROOF OR BLDG. LOCATED WITHIN 10 FT HORIZONTALLY OF SUCH CHIMNEYS. (AS PER FBC CHAPTER 10)

REAR ELEVATION (West)

SCALE: 3/16" =1'-0"

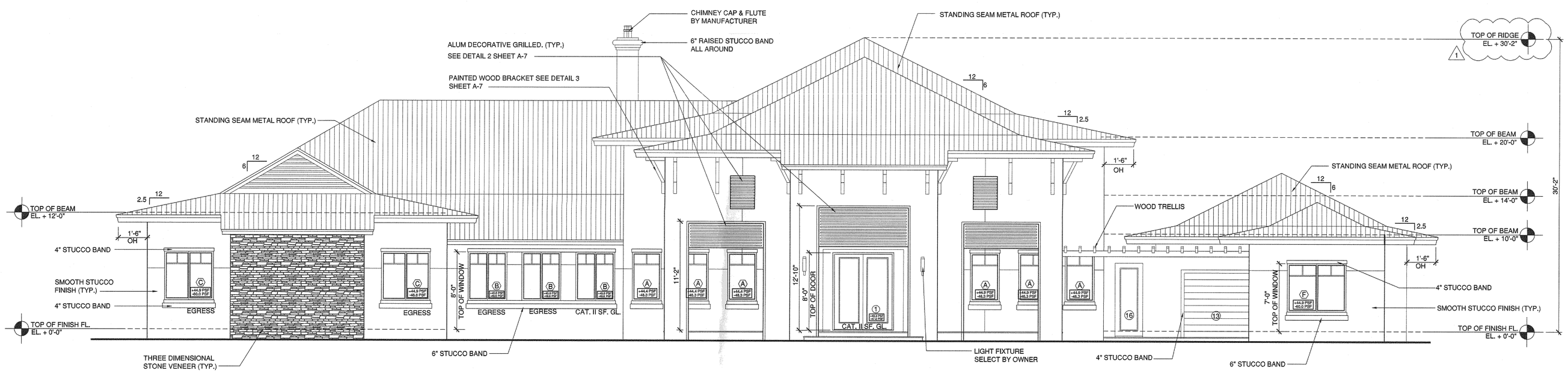

FRONT ELEVATION (East)

SCALE: 3/16" =1'-0"

BELLÓN architecture

13131 S.W. 132 STREET
SUITE 104
MIAMI, FLORIDA 33186

T. (305) 278-7776
F. (305) 278-7473
WWW.BELLONMIAMI.ES.COM
AA-26002616

ARCHITECTURE
LAND PLANNING
INTERIORS

CONSTRUCTION MANAGEMENT

CONSULTANTS

A CUSTOM RESIDENCE FOR:

Mr. AND MRS. R. SANCHEZ / NOLAN RODRIGUEZ
13940 OLD CUTTLER ROAD
PALMETTO BAY, FLORIDA

MARK	DATE	DESCRIPTION
1	03-18-16	B.D.C

PROJECT No. LB269
DRAWN BY: JP / AM
CHECKED BY: LB
DATE: 06-18-14

STATE OF FLORIDA
LEOPOLDO BELLON
No. 8737
REGISTERED ARCHITECT

LEOPOLDO BELLON, AIA (AR-8737)

SHEET TITLE
ELEVATIONS

A-2

SHEET OF

WINDOW NOTES

1. ALL WINDOWS TO BE IMPACT RESISTANT & MEET ASCE 7-94 WIND LOADS, MFR TO SUPPLY DADE COUNTY APPROVAL LETTERS & SHOP DRAWINGS. ALL WINDOWS TO BE DADE COUNTY APPROVED + COMPLIANT WITH ALL APPLICABLE CODES.
2. ALL WINDOWS TO BE ESP WHITE FINISH WITH LIGHT GRAY TINTED IMPACT RESISTANT GLASS.
3. ALL EXTERIOR GLASS SHALL BE 9/16" LAMINATED GLASS (IMPACT RESISTANT) AS FOLLOWS:
   1/4" TEMPERED GRAY TINTED GLASS (SHADING COEFFICIENT 0.43) ON A PVB CLEAR INTER LAYER ON 1/4" CLEAR GLASS.
4. ALL DIMENSIONS SHOW ARE WINDOW UNIT SIZES, CONTRACTOR TO VERIFY ALL MASONRY ROUGH OPENINGS DIMENSIONS WITH MANUFACTURER PRIOR TO FABRICATING WINDOWS. (TYPICAL)
5. FOR SAFETY GLAZING WINDOW, A SAFETY GLAZING MUST MEET OR EXCEED ANSI Z97.1-1984 AS PER FBC 1617.4.6.3 LAS EDITION.

DOOR NOTES

1. ALL HARDWARE SHALL BE FURNISHED AND INSTALLED BY THE GENERAL CONTRACTOR.
2. INTERIOR DOOR, UNLESS OTHERWISE NOTED, SHALL BE GRADE.
3. PROVIDE WALL & FLOOR STOPS AS REQUIRED. PROVIDE SILENCERS TO ALL METAL FRAMES.
4. HOLLOW METAL DOOR TO BE 16 GAUGE.
5. PRODUCT APPROVAL PER WINDOWS / STORE FRONTS MUST BE SUBMITTED TO BUILDING DEPARTMENT FOR APPROVAL PRIOR TO INSPECTION OF SUCH PRODUCTS. ALSO SHALL BE DESIGNED TO MEET WIND PRESSURE AS PER ASCE 7-94.
6. UNLESS NOTED OTHERWISE, INTERIOR DOORS ARE WOOD OR MASONITE, EXTERIOR DOORS ARE METAL.
7. SLIDING DOOR WITH NOMINAL 32" CLEAR OPENING TO BE PROVIDED BY MANUFACTURER.
8. ALL STEEL FRAMES ARE GALVANIZED PRIMED AND PAINTED.
9. ALL WINDOWS AND EXTERIOR GLASS DOORS SHALL HAVE IMPACT RESISTANCE GLASS.
10. FIRE DOORS AND FRAMES SHALL BE U.L. "B" LABEL RATED 1-1/2 HOURS.
11. ALL EXTERIOR DOORS TO HAVE WATER STRIP: 399 AV. VINYL DORBIN OR APPROVED EQUAL.
12. HINGES AT EXTERIOR METAL DOORS TO BE NON-REMOVABLE PIN WITH SECURITY STUDS TYPE.
13. REFER TO SPECIFICATIONS FOR HARDWARE SCHEDULE AND ADDITIONAL INFO.
14. ALL EXTERIOR DOORS TO BE DADE COUNTY PRODUCT APPROVED.

DOOR LEGEND

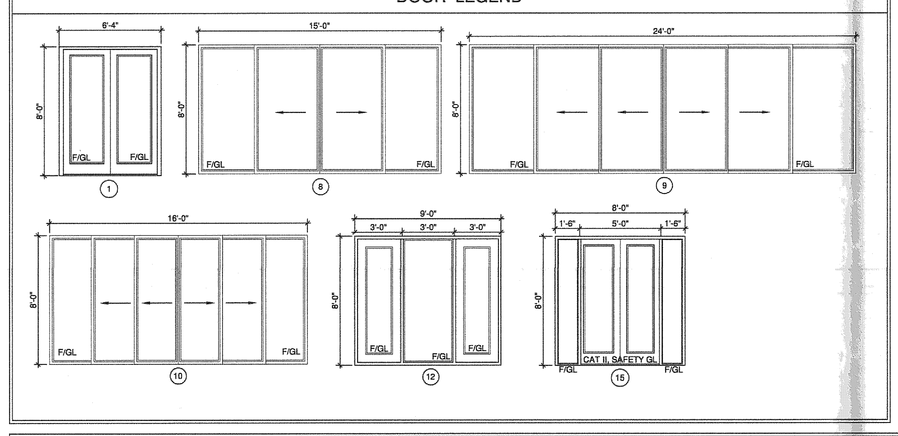

WINDOW LEGEND

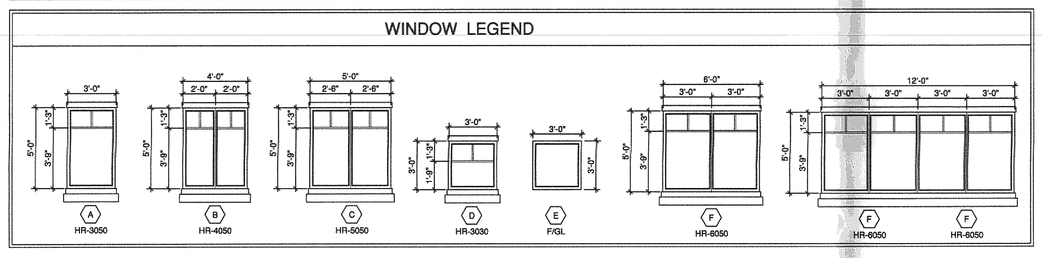

NOTE:
ALL WINDOW DIMENSIONS ARE APPROXIMATE. WINDOW CONTRACTOR SHALL VERIFY ALL WINDOW ROUGH OPENINGS PRIOR TO FABRICATION. PROVIDE SHOP DRAWINGS FOR ARCHITECT APPROVAL.

WINDOW SCHEDULE

NO.	TYPE	MODULAR SIZES W	MODULAR SIZES H	REMARKS
A	HR 3050	36"	60"	CAT. II SAFETY GLASS
B	HR 4050	48"	60"	CAT. II SAFETY GLASS
C	HR 5050	60"	60"	CAT. II SAFETY GLASS
D	HR 3030	36"	36"	CAT. II SAFETY GLASS
E	FIXED GLASS	36"	36"	CAT. II SAFETY GLASS
F	HR 6050	72"	60"	CAT. II SAFETY GLASS

U FACTOR 1.06 SHGC - 0.43

FINISH SCHEDULE

ROOM	FLOOR	BASE	WALL	CEILING	CLG. HT.	REMARKS
PORCH	TILE	STUCCO	STUCCO	————	AS PER PLANS	
FOYER	TILE	WOOD	GYP. BRD.	GYP. BRD.	AS PER PLANS	
FAMILY GARDERING	TILE	WOOD	GYP. BRD.	GYP. BRD.	AS PER PLANS	
DINING ROOM	TILE	WOOD	GYP. BRD.	GYP. BRD.	AS PER PLANS	
GREAT ROOM	TILE	WOOD	GYP. BRD.	GYP. BRD.	AS PER PLANS	
KITCHEN	TILE	WOOD	GYP. BRD.	GYP. BRD.	AS PER PLANS	
PANTRY	TILE	WOOD	GYP. BRD.	GYP. BRD.	AS PER PLANS	
BUTLER'S PANTRY	TILE	WOOD	GYP. BRD.	GYP. BRD.	AS PER PLANS	
POWDER ROOM	TILE	TILE	GYP. BRD.	GYP. BRD.	AS PER PLANS	
COVERED TERRACE	N/A	STUCCO	N/A	N/A	N/A	
LAUNDRY	TILE	WOOD	GYP. BRD.	GYP. BRD.	AS PER PLANS	
WIC / HIS / HER'S	WOOD	WOOD	GYP. BRD.	GYP. BRD.	AS PER PLANS	
MASTER SUITE	WOOD	WOOD	GYP. BRD.	GYP. BRD.	AS PER PLANS	
MASTER BATHROOM	TILE	TILE	GYP. BRD.	GYP. BRD.	AS PER PLANS	
BEDROOM 2,3,4,5	WOOD	WOOD	GYP. BRD.	GYP. BRD.	AS PER PLANS	
BATH 2, 3, 4, 5	TILE	TILE	GYP. BRD.	GYP. BRD.	AS PER PLANS	
PLAYROOM	TILE	WOOD	GYP. BRD.	GYP. BRD.	AS PER PLANS	
WINE CELLAR / WINE TESTING	TILE	WOOD	GYP. BRD.	GYP. BRD.	AS PER PLANS	
GARAGES/ STORAGE	N/A	N/A	N/A	N/A	N/A	

DOOR SCHEDULE

No.	LOCATION	SIZE WIDTH	SIZE HEIGHT	SIZE THICK	TYPE	MATERIAL	FINISH	THRESHOLD	JAMB	REMARKS
1	ENTRY	3'-0"	8'-0"	1 3/4"	SWING (DBL.)	METAL/GLASS	FAC. FIN.	METAL	METAL	CAT. II SAFETY GLASS
2	MASTER BATH / BATH 2,3,5 / WIC BEDROOM 5 / BEDROOM 2,3,5 / LAUNDRY / PANTRY / POWDER	2'-6"	8'-0"	1 3/4"	PRE-HUNG	WOOD	PAINTED	————	WOOD	
3	BEDROOM 4 / BATH 4 / WIC BEDROOM 4	2'-8"	8'-0"	1 3/4"	PRE-HUNG	WOOD	PAINTED	————	WOOD	HANDICAP ACCESS
4	W.I.C. BEDROOM 2, 3	2'-0"	8'-0"	1 3/4"	PRE-HUNG	WOOD	PAINTED	————	WOOD	
5	LINEN	2'-2"-0"	8'-0"	1 3/4"	PRE-HUNG	WOOD	PAINTED	————	WOOD	
6	A/C	2'-2"-0"	8'-0"	1 3/4"	PRE-HUNG	WOOD	PAINTED	————	WOOD	LOUVERED
7	MASTER SUITE	2'-2"-0"	8'-0"	1 3/4"	SWING (DBL.)	WOOD		————	WOOD	
8	FAMILY GADERING	15'-0"	8'-0"	1 3/4"	SLIDING	METAL/GLASS	FAC. FIN.	METAL	METAL	CAT. II SAFETY GLASS / SEE DETAIL THIS SHEET
9	GREAT ROOM	24'-0"	8'-0"	1 3/4"	SLIDING	METAL/GLASS	FAC. FIN.	METAL	METAL	CAT. II SAFETY GLASS
10	HALL	16'-0"	8'-0"	1 3/4"	SLIDING	METAL/GLASS	FAC. FIN.	METAL	METAL	CAT. II SAFETY GLASS
11	PLAY ROOM	2'-2"-0"	8'-0"	1 3/4"	SWING (DBL.)	METAL/GLASS	FAC. FIN.	METAL	METAL	CAT. II SAFETY GLASS W
12	MASTER BATH	2'-2"-0"	8'-0"	1 3/4"		METAL/GLASS	FAC. FIN.	METAL	METAL	CAT. II SAFETY GLASS / SEE DETAIL THIS SHEET
13	GARAGE	9'-0"	8'-0"	1 3/4"	OVERHEAD	METAL		————	WOOD	GARAGE DOOR
14	STORAGE	2'-2"-6"	8'-0"	1 3/4"	SWING (DBL.)	METAL/GLASS	FAC. FIN.	METAL	METAL	CAT. II SAFETY GLASS
15	MASTER SUITE	2'-2"-6"	8'-0"	1 3/4"	SWING (DBL.)	METAL/GLASS	FAC. FIN.	METAL	METAL	CAT. II SAFETY GLASS W/ SIDELIGHTS / SEE DETAIL THIS SHEET
16	GARAGE / EXT. CORRIDOR	2'-6"	8'-0"	1 3/4"	METAL CLAD	METAL		————	METAL	

CHIMNEYS SHALL EXTEND AT LEAST 3 FT ABOVE OF HIGHEST POINT WHERE THEY PASS THROUGHT THE ROOF OF THE BLDG. AND AT LEAST 2 FT HIGHER THAN ANY PORTION OF THE ROOF OR BLDG. LOCATED WITHIN 10 FT HORIZONTALLY OF SUCH CHIMNEYS. (AS PER FBC CHAPTER 10)

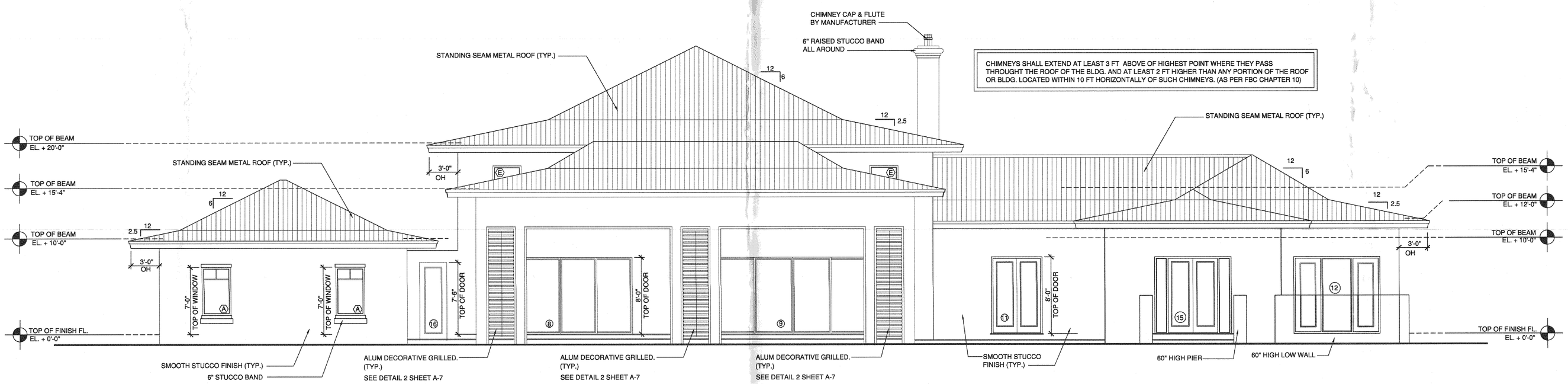

REAR ELEVATION (West)

SCALE: 3/16" =1'-0"

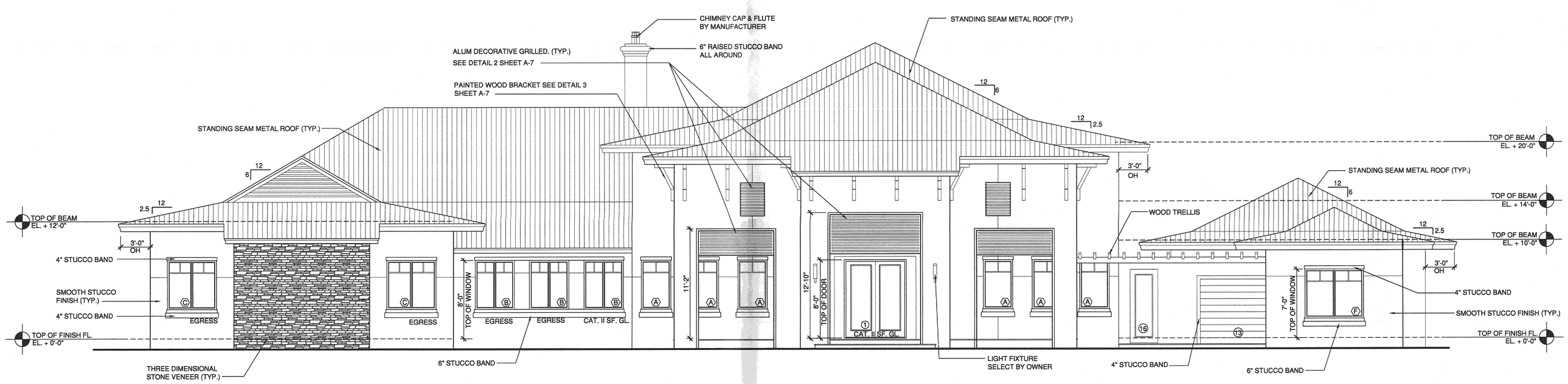

FRONT ELEVATION (East)

SCALE: 3/16" =1'-0"

BELLON architecture
13131 S.W. 132 STREET
SUITE 104
MIAMI, FLORIDA. 33186
T. (305) 278-7776
F. (305) 278-7473
WWW.BELLONMILANES.COM
AA-26002616
ARCHITECTURE
LAND PLANNING
INTERIORS
CONSTRUCTION MANAGEMENT

CONSULTANTS

A CUSTOM RESIDENCE FOR:

Mr. AND MRS. R. SANCHEZ / NOLAN RODRIGUEZ

13940 OLD CUTTLER ROAD
PALMETTO BAY, FLORIDA

MARK	DATE	DESCRIPTION

PROJECT No. LB269
DRAWN BY: JP / AM
CHECKED BY: LB
DATE: 06-18-14

STATE OF FLORIDA LEOPOLDO BELLON REGISTERED ARCHITECT AR 27111

LEOPOLDO BELLON, AIA (AR-5737)

SHEET TITLE
ELEVATIONS

A-2

SHEET OF

WINDOW NOTES

1. ALL WINDOWS TO BE IMPACT RESISTANT & MEET ASCE 7-94 WIND LOADS, MFR TO SUPPLY DADE COUNTY APPROVAL LETTERS & SHOP DRAWINGS. ALL WINDOWS TO BE DADE COUNTY APPROVED + COMPLIANT WITH ALL APPLICABLE CODES.
2. ALL WINDOWS TO BE ESP WHITE FINISH WITH LIGHT GRAY TINTED IMPACT RESISTANT GLASS.
3. ALL EXTERIOR GLASS SHALL BE 9/16" LAMINATED GLASS (IMPACT RESISTANT) AS FOLLOWS:
   1/4" TEMPERED GRAY TINTED GLASS (SHADING COEFFICIENT 0.43) ON A PVB CLEAR INTER LAYER ON 1/4" CLEAR GLASS.
4. ALL DIMENSIONS SHOW ARE WINDOW UNIT SIZES, CONTRACTOR TO VERIFY ALL MASONRY ROUGH OPENINGS DIMENSIONS WITH MANUFACTURER PRIOR TO FABRICATING WINDOWS. (TYPICAL)
5. FOR SAFETY GLAZING WINDOW, A SAFETY GLAZING MUST MEET OR EXCEED ANSI Z97.1-1984 AS PER FBC 1617.4.6.3 LAS EDITION.

DOOR NOTES

1. ALL HARDWARE SHALL BE FURNISHED AND INSTALLED BY THE GENERAL CONTRACTOR.
2. INTERIOR DOOR, UNLESS OTHERWISE NOTED, SHALL BE GRADE.
3. PROVIDE WALL & FLOOR STOPS AS REQUIRED. PROVIDE SILENCERS TO ALL METAL FRAMES.
4. HOLLOW METAL DOOR TO BE 16 GAUGE.
5. PRODUCT APPROVAL PER WINDOWS / STORE FRONTS MUST BE SUBMITTED TO BUILDING DEPARTMENT FOR APPROVAL PRIOR TO INSPECTION OF SUCH PRODUCTS. ALSO SHALL BE DESIGNED TO MEET WIND PRESSURE AS PER ASCE 7-94.
6. UNLESS NOTED OTHERWISE, INTERIOR DOORS ARE WOOD OR MASONITE, EXTERIOR DOORS ARE METAL.
7. SLIDING DOOR WITH NOMINAL 32" CLEAR OPENING TO BE PROVIDED BY MANUFACTURER.
8. ALL STEEL FRAMES ARE GALVANIZED PRIMED AND PAINTED.
9. ALL WINDOWS AND EXTERIOR GLASS DOORS SHALL HAVE IMPACT RESISTANCE GLASS.
10. FIRE DOORS AND FRAMES SHALL BE U.L. "B" LABEL RATED 1-1/2 HOURS.
11. ALL EXTERIOR DOORS TO HAVE WATER STRIP: 399 AV. VINYL DORBIN OR APPROVED EQUAL.
12. HINGES AT EXTERIOR METAL DOORS TO BE NON-REMOVABLE PIN WITH SECURITY STUDS TYPE.
13. REFER TO SPECIFICATIONS FOR HARDWARE SCHEDULE AND ADDITIONAL INFO.
14. ALL EXTERIOR DOORS TO BE DADE COUNTY PRODUCT APPROVED.

DOOR LEGEND

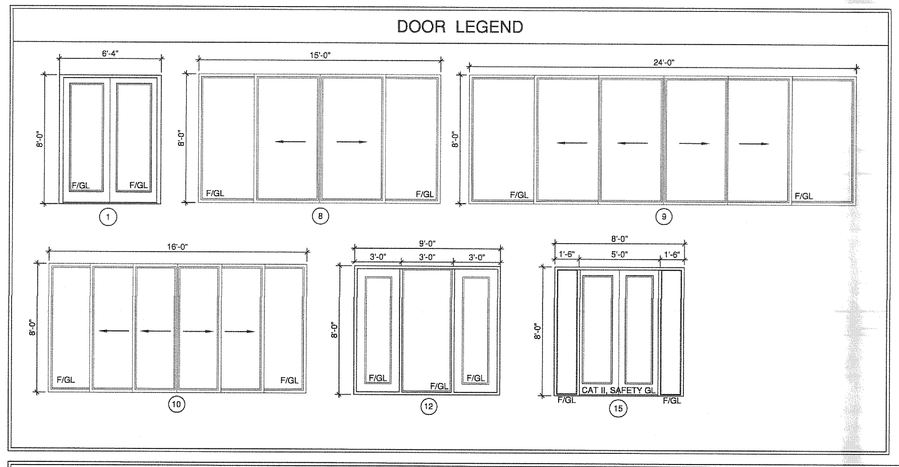

WINDOW LEGEND

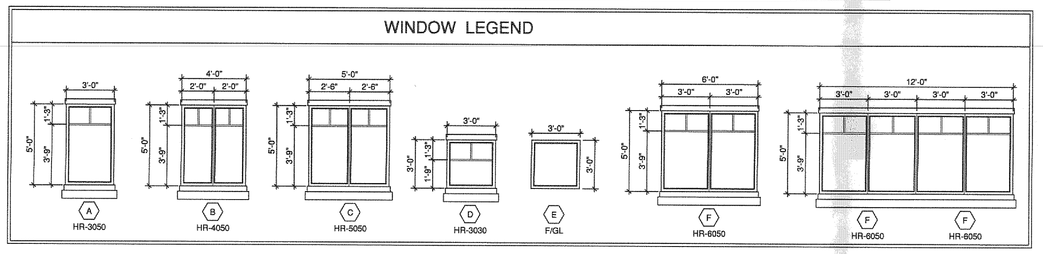

NOTE:
ALL WINDOW DIMENSIONS ARE APPROXIMATE. WINDOW CONTRACTOR SHALL VERIFY ALL WINDOW ROUGH OPENINGS PRIOR TO FABRICATION. PROVIDE SHOP DRAWINGS FOR ARCHITECT APPROVAL.

WINDOW SCHEDULE

NO.	TYPE	MODULAR SIZES W	MODULAR SIZES H	REMARKS
A	HR 3050	36"	60"	CAT. II SAFETY GLASS
B	HR 4050	48"	60"	CAT. II SAFETY GLASS
C	HR 5050	60"	60"	CAT. II SAFETY GLASS
D	HR 3030	36"	36"	CAT. II SAFETY GLASS
E	FIXED GLASS	36"	36"	CAT. II SAFETY GLASS
F	HR 6050	72"	60"	CAT. II SAFETY GLASS

U FACTOR 1.06 SHGC - 0.43

FINISH SCHEDULE

ROOM	FLOOR	BASE	WALL	CEILING	CLG. HT.	REMARKS
PORCH	TILE	STUCCO	STUCCO	———	AS PER PLANS	
FOYER	TILE	WOOD	GYP. BRD.	GYP. BRD.	AS PER PLANS	
FAMILY GARDERING	TILE	WOOD	GYP. BRD.	GYP. BRD.	AS PER PLANS	
DINING ROOM	TILE	WOOD	GYP. BRD.	GYP. BRD.	AS PER PLANS	
GREAT ROOM	TILE	WOOD	GYP. BRD.	GYP. BRD.	AS PER PLANS	
KITCHEN	TILE	WOOD	GYP. BRD.	GYP. BRD.	AS PER PLANS	
PANTRY	TILE	WOOD	GYP. BRD.	GYP. BRD.	AS PER PLANS	
BUTLER'S PANTRY	TILE	WOOD	GYP. BRD.	GYP. BRD.	AS PER PLANS	
POWDER ROOM	TILE	TILE	GYP. BRD.	GYP. BRD.	AS PER PLANS	
COVERED TERRACE	N/A	STUCCO	N/A	N/A	N/A	
LAUNDRY	TILE	WOOD	GYP. BRD.	GYP. BRD.	AS PER PLANS	
WIC / HIS / HER'S	WOOD	WOOD	GYP. BRD.	GYP. BRD.	AS PER PLANS	
MASTER SUITE	WOOD	WOOD	GYP. BRD.	GYP. BRD.	AS PER PLANS	
MASTER BATHROOM	TILE	TILE	GYP. BRD.	GYP. BRD.	AS PER PLANS	
BEDROOM 2,3,4,5	WOOD	WOOD	GYP. BRD.	GYP. BRD.	AS PER PLANS	
BATH 2, 3, 4, 5	TILE	TILE	GYP. BRD.	GYP. BRD.	AS PER PLANS	
PLAYROOM	TILE	WOOD	GYP. BRD.	GYP. BRD.	AS PER PLANS	
WINE CELLAR / WINE TESTING	TILE	WOOD	GYP. BRD.	GYP. BRD.	AS PER PLANS	
GARAGES/ STORAGE	N/A	N/A	N/A	N/A	N/A	

DOOR SCHEDULE

No.	LOCATION	SIZE WIDTH	SIZE HEIGHT	SIZE THICK	TYPE	MATERIAL	FINISH	THRESHOLD	JAMB	REMARKS
1	ENTRY	2-2'-0"	8'-0"	1 3/4"	SWING (DBL.)	METAL/GLASS	FAC. FIN.	METAL	METAL	CAT. II SAFETY GLASS
2	MASTER BATH / BATH 2,3,5 / WIC BEDROOM 5 / BEDROOM 2,3,5 / LAUNDRY / PANTRY / POWDER	2'-6"	8'-0"	1 3/4"	PRE-HUNG	WOOD	PAINTED	———	WOOD	
3	BEDROOM 4 / BATH 4 / WIC BEDROOM 4	2'-8"	8'-0"	1 3/4"	PRE-HUNG	WOOD	PAINTED	———	WOOD	HANDICAP ACCESS
4	W.I.C. BEDROOM 2, 3	2'-0"	8'-0"	1 3/4"	PRE-HUNG	WOOD	PAINTED	———	WOOD	
5	LINEN	2-2'-0"	8'-0"	1 3/4"	PRE-HUNG	WOOD	PAINTED	———	WOOD	
6	A/C	2-2'-0"	8'-0"	1 3/4"	PRE-HUNG	WOOD	PAINTED	———	WOOD	LOUVERED
7	MASTER SUITE	2-2'-6"	8'-0"	1 3/4"	SWING (DBL.)	WOOD		———	WOOD	
8	FAMILY GARDERING	15'-0"	8'-0"	1 3/4"	SLIDING	METAL/GLASS	FAC. FIN.	METAL	METAL	CAT. II SAFETY GLASS / SEE DETAIL THIS SHEET
9	GREAT ROOM	24'-0"	8'-0"	1 3/4"	SLIDING	METAL/GLASS	FAC. FIN.	METAL	METAL	CAT. II SAFETY GLASS
10	HALL	16'-0"	8'-0"	1 3/4"	SLIDING	METAL/GLASS	FAC. FIN.	METAL	METAL	CAT. II SAFETY GLASS
11	PLAY ROOM	2-2'-6"	8'-0"	1 3/4"	SWING (DBL.)	METAL/GLASS	FAC. FIN.	METAL	METAL	CAT. I SAFETY GLASS W
12	MASTER BATH	2-2'-0"	8'-0"	1 3/4"		METAL/GLASS	FAC. FIN.	METAL	METAL	CAT. II SAFETY GLASS / SEE DETAIL THIS SHEET
13	GARAGE	9'-0"	8'-0"	1 3/4"	OVERHEAD	METAL		———	WOOD	GARAGE DOOR
14	STORAGE	2-2'-6"	8'-0"	1 3/4"	SWING (DBL.)	METAL/GLASS	FAC. FIN.	METAL	METAL	CAT. II SAFETY GLASS
15	MASTER SUITE	2-2'-6"	8'-0"	1 3/4"	SWING (DBL.)	METAL/GLASS	FAC. FIN.	METAL	METAL	CAT. II SAFETY GLASS W/ SIDELIGHTS / SEE DETAIL THIS SHEET
16	GARAGE / EXT. CORRIDOR	2'-6"	8'-0"	1 3/4"	METAL CLAD	METAL		———	METAL	

CHIMNEYS SHALL EXTEND AT LEAST 3 FT ABOVE OF HIGHEST POINT WHERE THEY PASS THROUGHT THE ROOF OF THE BLDG. AND AT LEAST 2 FT HIGHER THAN ANY PORTION OF THE ROOF OR BLDG. LOCATED WITHIN 10 FT HORIZONTALLY OF SUCH CHIMNEYS. (AS PER FBC CHAPTER 10)

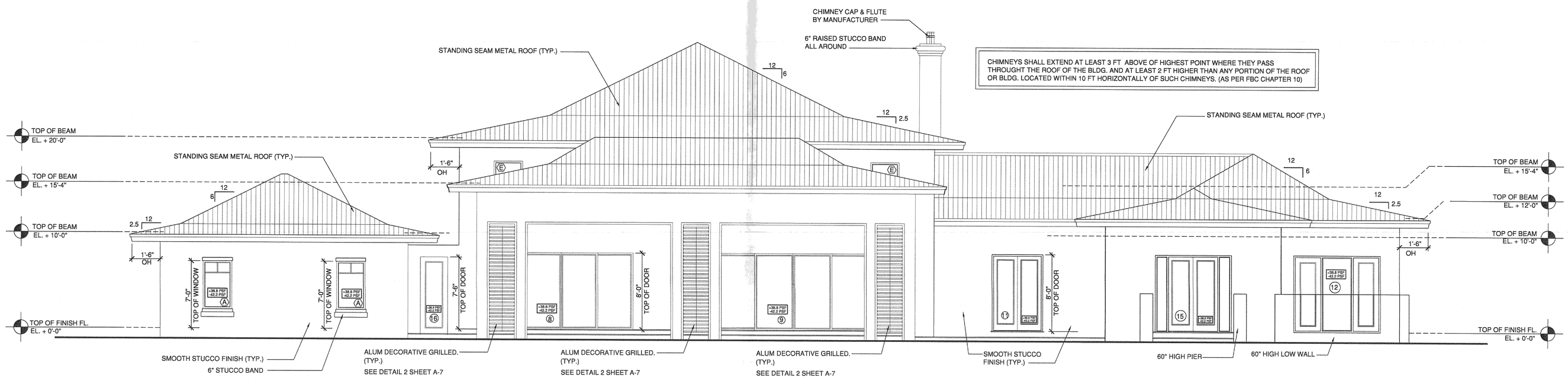

REAR ELEVATION (West)

SCALE: 3/16" =1'-0"

FRONT ELEVATION (East)

SCALE: 3/16" =1'-0"

BELLÓN architecture
13131 S.W. 132 STREET
SUITE 104
MIAMI, FLORIDA 33186
T. (305) 278-7776
F. (305) 278-7473
WWW.BELLONMILANES.COM
AA-26002616
ARCHITECTURE
LAND PLANNING
INTERIORS
CONSTRUCTION MANAGEMENT

CONSULTANTS

A CUSTOM RESIDENCE FOR:

Mr. AND MRS. R. SANCHEZ / NOLAN RODRIGUEZ

13940 OLD CUTTLER ROAD
PALMETTO BAY, FLORIDA

MARK	DATE	DESCRIPTION

PROJECT No. LB269
DRAWN BY: JP / AM
CHECKED BY: LB
DATE: 06-18-14

STATE OF FLORIDA LEOPOLDO BELLON AR0087737

LEOPOLDO BELLON, AIA (AR-6737)

SHEET TITLE
ELEVATIONS

A-2

SHEET OF

WINDOW NOTES

1. ALL WINDOWS TO BE IMPACT RESISTANT & MEET ASCE 7-94 WIND LOADS, MF'R TO SUPPLY DADE COUNTY APPROVAL LETTERS & SHOP DRAWINGS. ALL WINDOWS TO BE DADE COUNTY APPROVED + COMPLIANT WITH ALL APPLICABLE CODES.
2. ALL WINDOWS TO BE ESP WHITE FINISH WITH LIGHT GRAY TINTED IMPACT RESISTANT GLASS.
3. ALL EXTERIOR GLASS SHALL BE 9/16" LAMINATED GLASS (IMPACT RESISTANT) AS FOLLOWS:
   1/4" TEMPERED GRAY TINTED GLASS (SHADING COEFFICIENT 0.43) ON A PVB CLEAR INTER LAYER ON 1/4" CLEAR GLASS.
4. ALL DIMENSIONS SHOW ARE WINDOW UNIT SIZES, CONTRACTOR TO VERIFY ALL MASONRY ROUGH OPENINGS DIMENSIONS WITH MANUFACTURER PRIOR TO FABRICATING WINDOWS. (TYPICAL)
5. FOR SAFETY GLAZING WINDOW, A SAFETY GLAZING MUST MEET OR EXCEED ANSI Z97.1-1984 AS PER FBC 1617.4.6.3 LAS EDITION.

DOOR NOTES

1. ALL HARDWARE SHALL BE FURNISHED AND INSTALLED BY THE GENERAL CONTRACTOR.
2. INTERIOR DOOR, UNLESS OTHERWISE NOTED, SHALL BE GRADE.
3. PROVIDE WALL & FLOOR STOPS AS REQUIRED. PROVIDE SILENCERS TO ALL METAL FRAMES.
4. HOLLOW METAL DOOR TO BE 16 GAUGE.
5. PRODUCT APPROVAL PER WINDOWS / STORE FRONTS MUST BE SUBMITTED TO BUILDING DEPARTMENT FOR APPROVAL PRIOR TO INSPECTION OF SUCH PRODUCTS. ALSO SHALL BE DESIGNED TO MEET WIND PRESSURE AS PER ASCE 7-94.
6. UNLESS NOTED OTHERWISE, INTERIOR DOORS ARE WOOD OR MASONITE, EXTERIOR DOORS ARE METAL.
7. SLIDING DOOR WITH NOMINAL 32" CLEAR OPENING TO BE PROVIDED BY MANUFACTURER.
8. ALL STEEL FRAMES ARE GALVANIZED PRIMED AND PAINTED.
9. ALL WINDOWS AND EXTERIOR GLASS DOORS SHALL HAVE IMPACT RESISTANCE GLASS.
10. FIRE DOORS AND FRAMES SHALL BE U.L. "B" LABEL RATED 1-1/2 HOURS.
11. ALL EXTERIOR DOORS TO HAVE WATER STRIP: 399 AV. VINYL DORBIN OR APPROVED EQUAL.
12. HINGES AT EXTERIOR METAL DOORS TO BE NON-REMOVABLE PIN WITH SECURITY STUDS TYPE.
13. REFER TO SPECIFICATIONS FOR HARDWARE SCHEDULE AND ADDITIONAL INFO.
14. ALL EXTERIOR DOORS TO BE DADE COUNTY PRODUCT APPROVED.

DOOR LEGEND

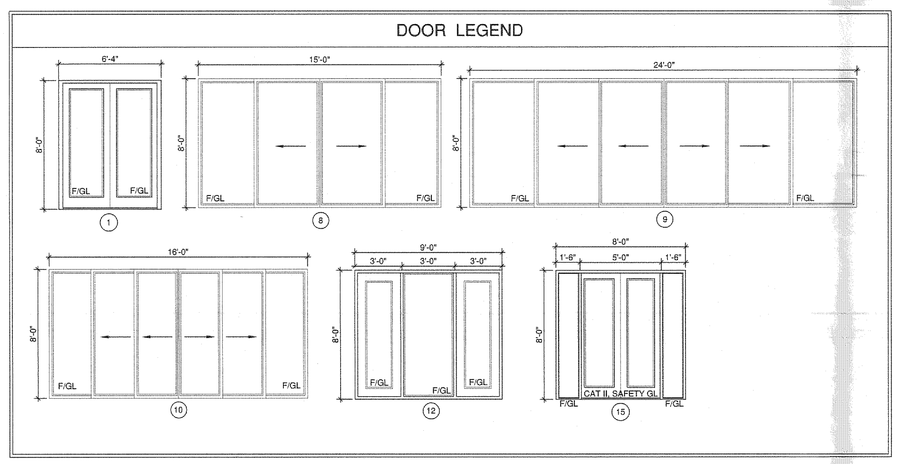

WINDOW LEGEND

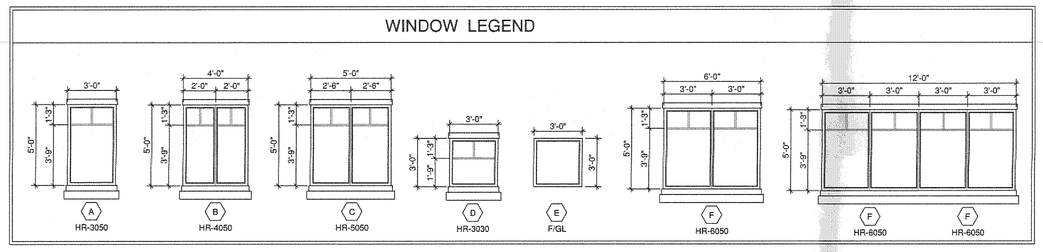

NOTE:
ALL WINDOW DIMENSIONS ARE APPROXIMATE. WINDOW CONTRACTOR SHALL VERIFY ALL WINDOW ROUGH OPENINGS PRIOR TO FABRICATION. PROVIDE SHOP DRAWINGS FOR ARCHITECT APPROVAL.

WINDOW SCHEDULE

NO.	TYPE	MODULAR SIZES W	MODULAR SIZES H	REMARKS
A	HR 3050	36"	60"	CAT. II SAFETY GLASS
B	HR 4050	48"	60"	CAT. II SAFETY GLASS
C	HR 5050	60"	60"	CAT. II SAFETY GLASS
D	HR 3030	36"	36"	CAT. II SAFETY GLASS
E	FIXED GLASS	36"	36"	CAT. II SAFETY GLASS
F	HR 6050	72"	60"	CAT. II SAFETY GLASS

U FACTOR 1.06 SHGC - 0.43

FINISH SCHEDULE

ROOM	FLOOR	BASE	WALL	CEILING	CLG. HT.	REMARKS
PORCH	TILE	STUCCO	STUCCO	————	AS PER PLANS	
FOYER	TILE	WOOD	GYP. BRD.	GYP. BRD.	AS PER PLANS	
FAMILY GARDERING	TILE	WOOD	GYP. BRD.	GYP. BRD.	AS PER PLANS	
DINING ROOM	TILE	WOOD	GYP. BRD.	GYP. BRD.	AS PER PLANS	
GREAT ROOM	TILE	WOOD	GYP. BRD.	GYP. BRD.	AS PER PLANS	
KITCHEN	TILE	WOOD	GYP. BRD.	GYP. BRD.	AS PER PLANS	
PANTRY	TILE	WOOD	GYP. BRD.	GYP. BRD.	AS PER PLANS	
BUTLER'S PANTRY	TILE	WOOD	GYP. BRD.	GYP. BRD.	AS PER PLANS	
POWDER ROOM	TILE	TILE	GYP. BRD.	GYP. BRD.	AS PER PLANS	
COVERED TERRACE	N/A	STUCCO	N/A	N/A	N/A	
LAUNDRY	TILE	WOOD	GYP. BRD.	GYP. BRD.	AS PER PLANS	
WIC / HIS / HER'S	WOOD	WOOD	GYP. BRD.	GYP. BRD.	AS PER PLANS	
MASTER SUITE	WOOD	WOOD	GYP. BRD.	GYP. BRD.	AS PER PLANS	
MASTER BATHROOM	TILE	TILE	GYP. BRD.	GYP. BRD.	AS PER PLANS	
BEDROOM 2,3,4,5	WOOD	WOOD	GYP. BRD.	GYP. BRD.	AS PER PLANS	
BATH 2, 3, 4, 5	TILE	TILE	GYP. BRD.	GYP. BRD.	AS PER PLANS	
PLAYROOM	TILE	WOOD	GYP. BRD.	GYP. BRD.	AS PER PLANS	
WINE CELLAR / WINE TESTING	TILE	WOOD	GYP. BRD.	GYP. BRD.	AS PER PLANS	
GARAGES/ STORAGE	N/A	N/A	N/A	N/A	N/A	

DOOR SCHEDULE

No.	LOCATION	SIZE WIDTH	SIZE HEIGHT	SIZE THICK	TYPE	MATERIAL	FINISH	THRESHOLD	JAMB	REMARKS
1	ENTRY	2-2'-0"	8'-0"	1 3/4"	SWING (DBL.)	METAL/GLASS	FAC. FIN.	METAL	METAL	CAT. II SAFETY GLASS
2	MASTER BATH / BATH 2,3,5 / WIC BEDROOM 5 / BEDROOM 2,3,5 / LAUNDRY / PANTRY / POWDER	2'-4"	8'-0"	1 3/4"	PRE-HUNG	WOOD	PAINTED	————	WOOD	
3	BEDROOM 4 / BATH 4 / WIC BEDROOM 4	2'-4"	8'-0"	1 3/4"	PRE-HUNG	WOOD	PAINTED	————	WOOD	HANDICAP ACCESS
4	W.I.C. BEDROOM 2, 3	2'-0"	8'-0"	1 3/4"	PRE-HUNG	WOOD	PAINTED	————	WOOD	
5	LINEN	2-2'-4"	8'-0"	1 3/4"	PRE-HUNG	WOOD	PAINTED	————	WOOD	
6	A/C	2-2'-0"	8'-0"	1 3/4"	PRE-HUNG	WOOD	PAINTED	————	WOOD	LOUVERED
7	MASTER SUITE	2-2'-6"	8'-0"	1 3/4"	SWING (DBL.)	WOOD	————	————	WOOD	
8	FAMILY GADERING	16'-0"	8'-0"	1 3/4"	SLIDING	METAL/GLASS	FAC. FIN.	METAL	METAL	CAT. II SAFETY GLASS / SEE DETAIL THIS SHEET
9	GREAT ROOM	24'-0"	8'-0"	1 3/4"	SLIDING	METAL/GLASS	FAC. FIN.	METAL	METAL	CAT. II SAFETY GLASS
10	HALL	16'-0"	8'-0"	1 3/4"	SLIDING	METAL/GLASS	FAC. FIN.	METAL	METAL	CAT. II SAFETY GLASS
11	PLAY ROOM	2-2'-6"	8'-0"	1 3/4"	SWING (DBL.)	METAL/GLASS	FAC. FIN.	METAL	METAL	CAT. II SAFETY GLASS W
12	MASTER BATH	2-3'-0"	8'-0"	1 3/4"		METAL/GLASS	FAC. FIN.	METAL	METAL	CAT. II SAFETY GLASS / SEE DETAIL THIS SHEET
13	GARAGE	9'-0"	8'-0"	1 3/4"	OVERHEAD	METAL		————	WOOD	GARAGE DOOR
14	STORAGE	2-2'-6"	8'-0"	1 3/4"	SWING (DBL.)	METAL/GLASS	FAC. FIN.	METAL	METAL	CAT. II SAFETY GLASS
15	MASTER SUITE	2-2'-6"	8'-0"	1 3/4"	SWING (DBL.)	METAL/GLASS	FAC. FIN.	METAL	METAL	CAT. II SAFETY GLASS W/ SIDELIGHTS / SEE DETAIL THIS SHEET
16	GARAGE / EXT. CORRIDOR	2'-4"	8'-0"	1 3/4"	METAL CLAD	METAL		————	METAL	

CHIMNEYS SHALL EXTEND AT LEAST 3 FT ABOVE OF HIGHEST POINT WHERE THEY PASS THROUGHT THE ROOF OF THE BLDG. AND AT LEAST 2 FT HIGHER THAN ANY PORTION OF THE ROOF OR BLDG. LOCATED WITHIN 10 FT HORIZONTALLY OF SUCH CHIMNEYS. (AS PER FBC CHAPTER 10)

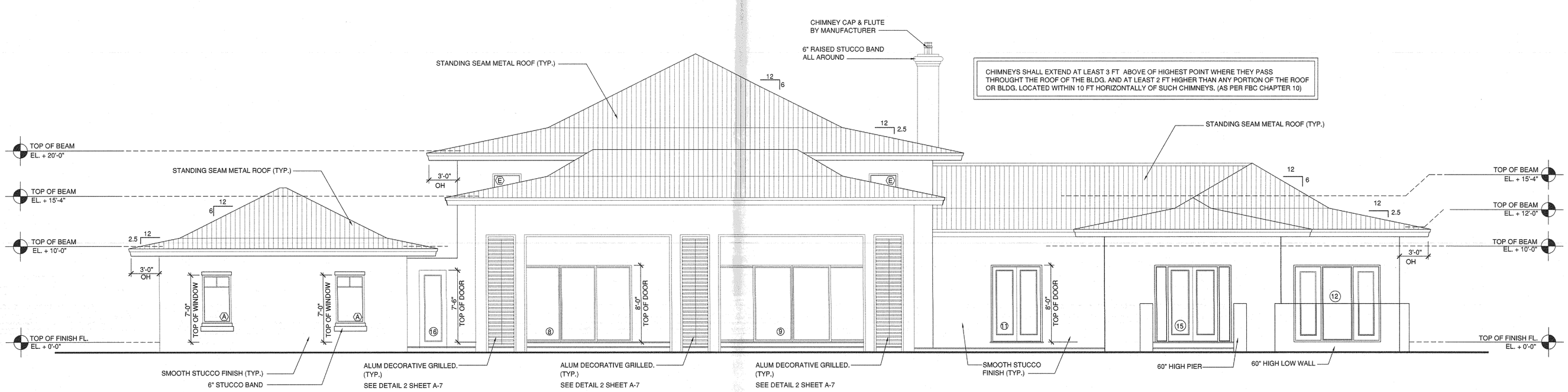

REAR ELEVATION (West)

SCALE: 3/16" =1'-0"

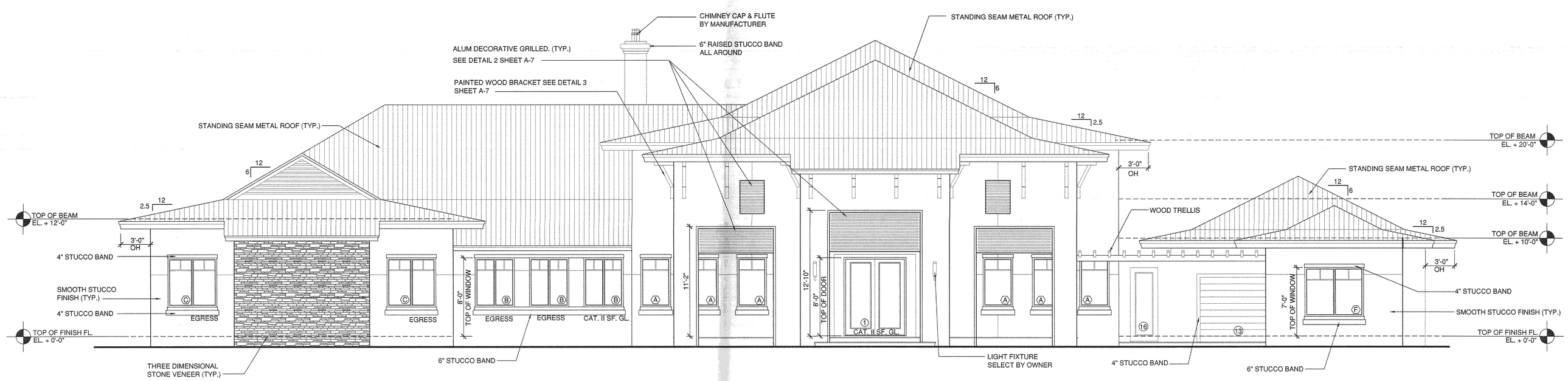

FRONT ELEVATION (East)

SCALE: 3/16" =1'-0"

BELLÓN architecture

13131 S.W. 132 STREET
SUITE 104
MIAMI, FLORIDA 33186
T. (305) 278-7776
F. (305) 278-7473
WWW.BELLONMIAMI.COM
AA-26002616

ARCHITECTURE
LAND PLANNING
INTERIORS
CONSTRUCTION MANAGEMENT

CONSULTANTS

A CUSTOM RESIDENCE FOR:

Mr. AND MRS. R. SANCHEZ / NOLAN RODRIGUEZ
13940 OLD CUTTLER ROAD
PALMETTO BAY, FLORIDA

MARK	DATE	DESCRIPTION

PROJECT No. LB269
DRAWN BY: JP / AM
CHECKED BY: LB
DATE: 06-18-14

STATE OF FLORIDA LEOPOLDO BELLON REGISTERED ARCHITECT 10241

LEOPOLDO BELLON, AIA (AR-5737)

SHEET TITLE
ELEVATIONS

A-2

SHEET OF

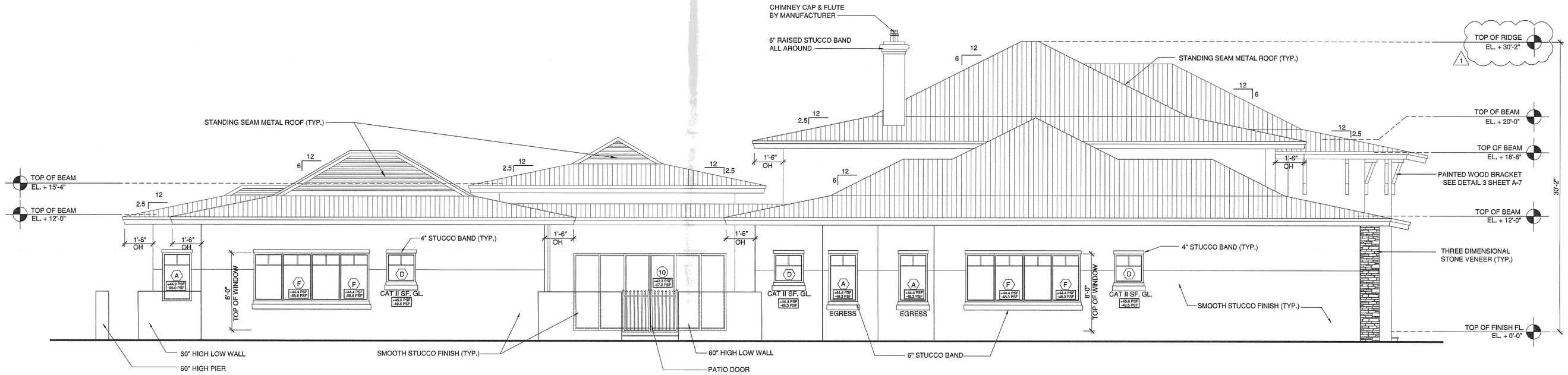

SIDE ELEVATION (South)

SCALE: 3/16" =1'-0"

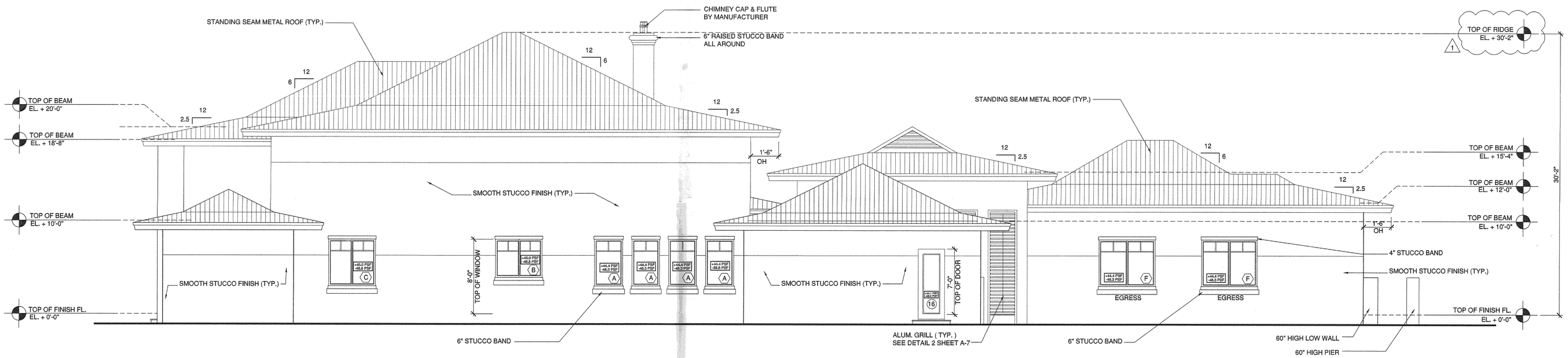

SIDE ELEVATION (North)

SCALE: 3/16" =1'-0"

BELLÓN architecture

13131 S.W. 132 STREET
SUITE 104
MIAMI, FLORIDA 33186

T. (305) 278-7776
F. (305) 278-7473
WWW.BELLONPLANES.COM
AA-26002616

ARCHITECTURE
LAND PLANNING
INTERIORS

CONSTRUCTION MANAGEMENT

CONSULTANTS

A CUSTOM RESIDENCE FOR:

Mr. AND MRS. R. SANCHEZ / NOLAN RODRIGUEZ

13940 OLD CUTTLER ROAD
PALMETTO BAY, FLORIDA

MARK	DATE	DESCRIPTION
1	03-18-16	B.D.C

PROJECT No. LB269
DRAWN BY: JP / AM
CHECKED BY: LB
DATE: 06-18-14

STATE OF FLORIDA
LEOPOLDO BELLON
REGISTERED ARCHITECT

LEOPOLDO BELLON, AIA (AR-6737)

SHEET TITLE

ELEVATIONS

A-3

SHEET OF

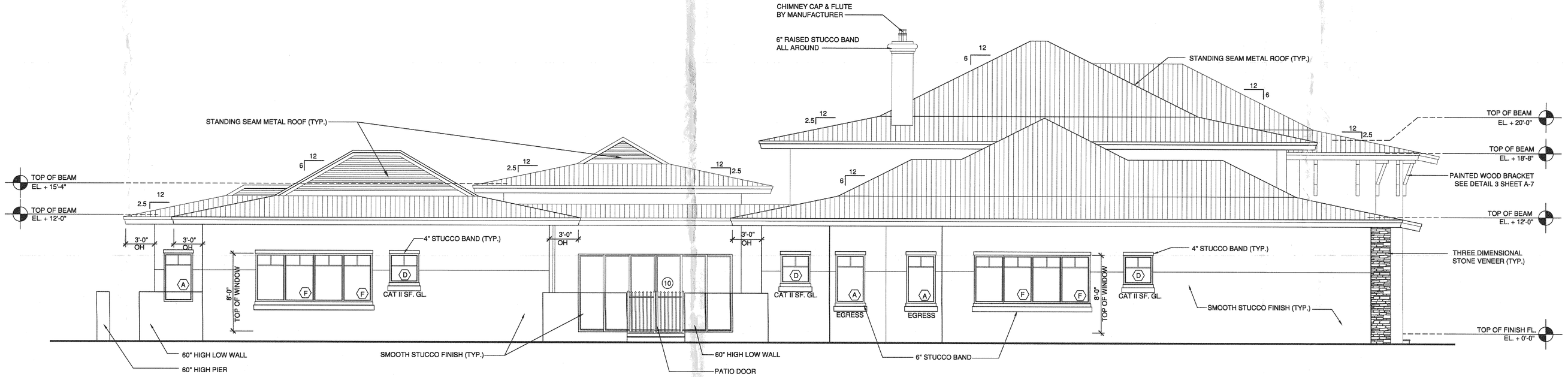

SIDE ELEVATION (South)

SCALE: 3/16" =1'-0"

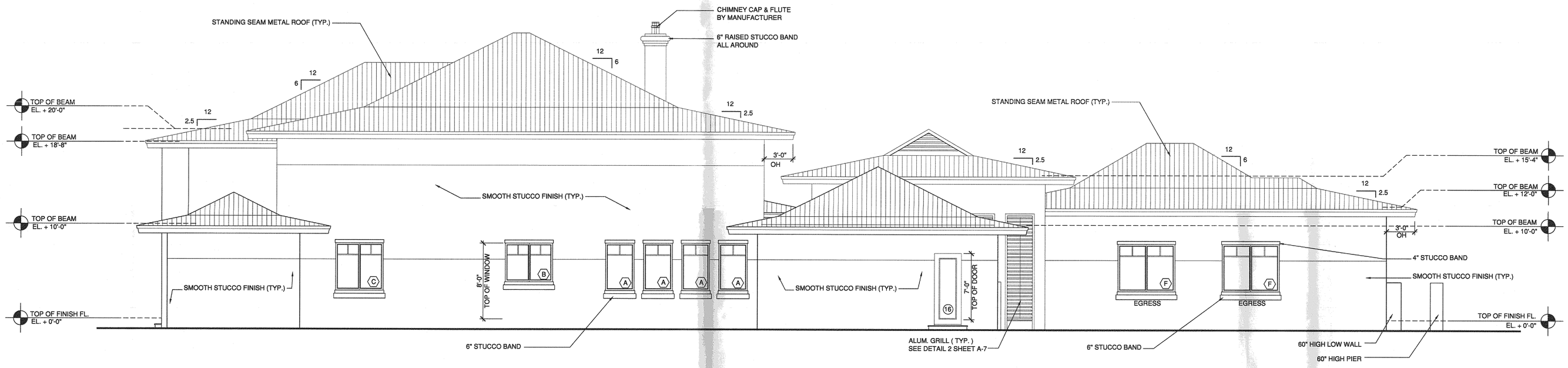

SIDE ELEVATION (North)

SCALE: 3/16" =1'-0"

BELLON architecture

13131 S.W. 132 STREET
SUITE 104
MIAMI, FLORIDA 33186

T. (305) 278-7776
F. (305) 278-7473
WWW.BELLONMIAMI.COM
AA-26002616

ARCHITECTURE
LAND PLANNING
INTERIORS
CONSTRUCTION MANAGEMENT

CONSULTANTS

A CUSTOM RESIDENCE FOR:

MR. AND MRS. R. SANCHEZ / NOLAN RODRIGUEZ
13940 OLD CUTTLER ROAD
PALMETTO BAY, FLORIDA

MARK	DATE	DESCRIPTION

PROJECT No. LB269
DRAWN BY: JP / AM
CHECKED BY: LB
DATE: 06-18-14

STATE OF FLORIDA · LEOPOLDO BELLON · AR 8737 · REGISTERED ARCHITECT

LEOPOLDO BELLON, AIA (AR-8737)

SHEET TITLE

ELEVATIONS

A-3

SHEET OF

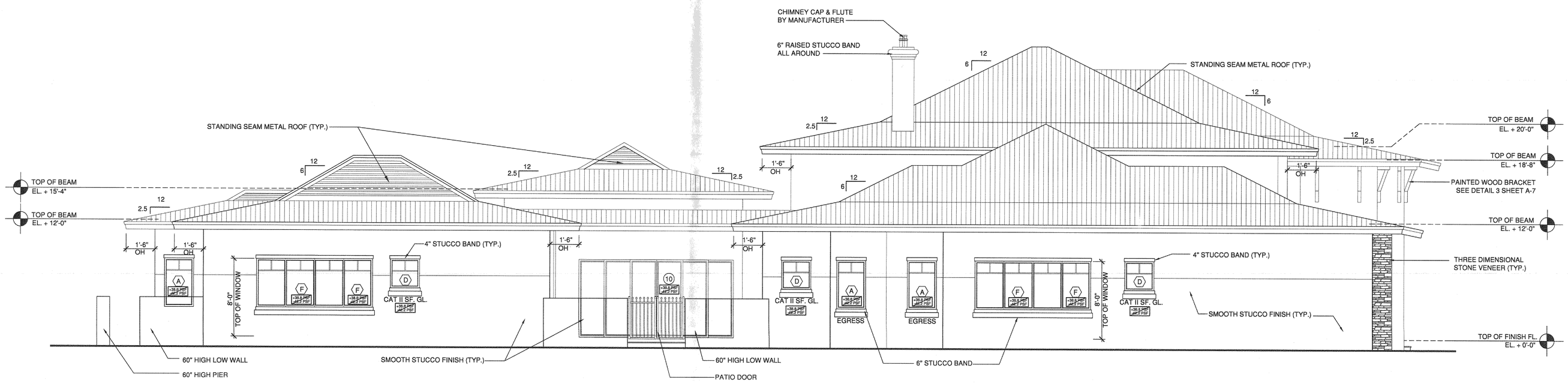

SIDE ELEVATION (South)

SCALE: 3/16" =1'-0"

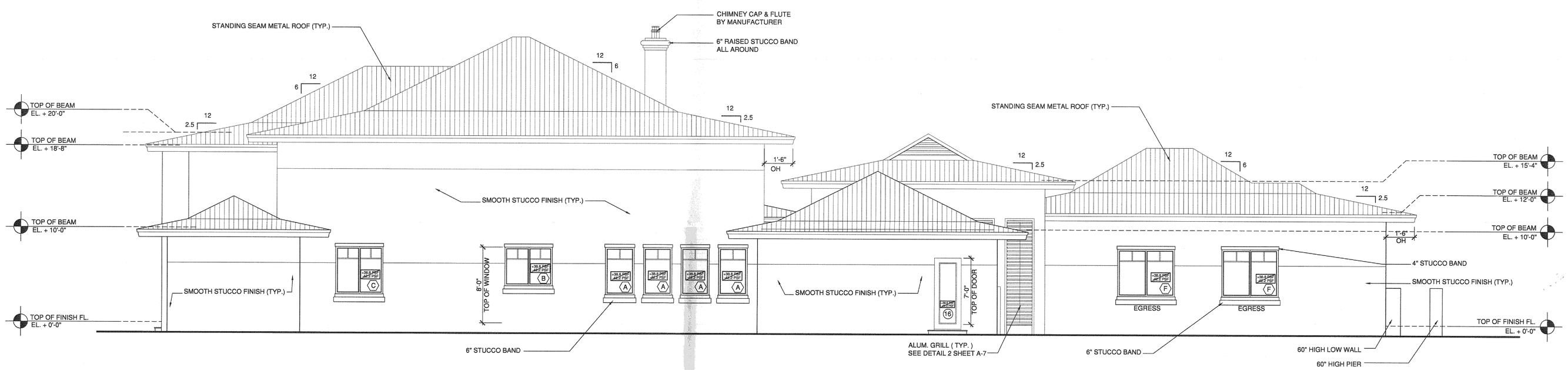

SIDE ELEVATION (North)

SCALE: 3/16" =1'-0"

BELLON
architecture

13131 S.W. 132 STREET
SUITE 104
MIAMI, FLORIDA 33186
T. (305) 278-7776
F. (305) 278-7473
WWW.BELLONMILANES.COM
AA-26002616

ARCHITECTURE
LAND PLANNING
INTERIORS
CONSTRUCTION MANAGEMENT

CONSULTANTS

A CUSTOM RESIDENCE FOR:

Mr. AND MRS. R. SANCHEZ / NOLAN RODRIGUEZ
13940 OLD CUTTLER ROAD
PALMETTO BAY, FLORIDA

MARK	DATE	DESCRIPTION

PROJECT No. LB269
DRAWN BY: JP / AM
CHECKED BY: LB
DATE: 06-18-14

STATE OF FLORIDA
LEOPOLDO BELLON
AR-8737
REGISTERED ARCHITECT
4/16

LEOPOLDO BELLON, AIA (AR-8737)

SHEET TITLE
ELEVATIONS
A-3

SHEET OF

VPB
10-20-15
BLDG DIV

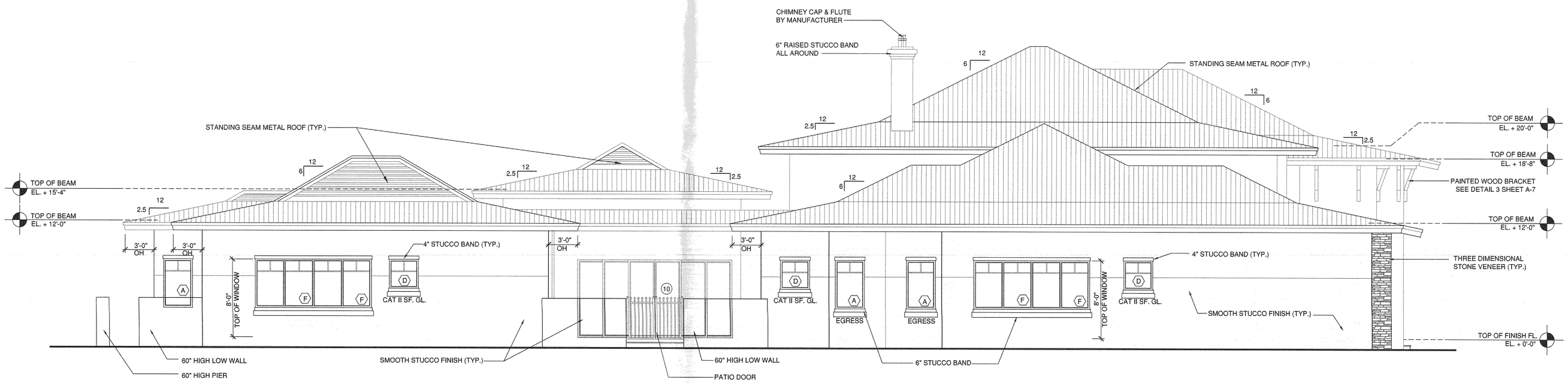

SIDE ELEVATION (South)

SCALE: 3/16" =1'-0"

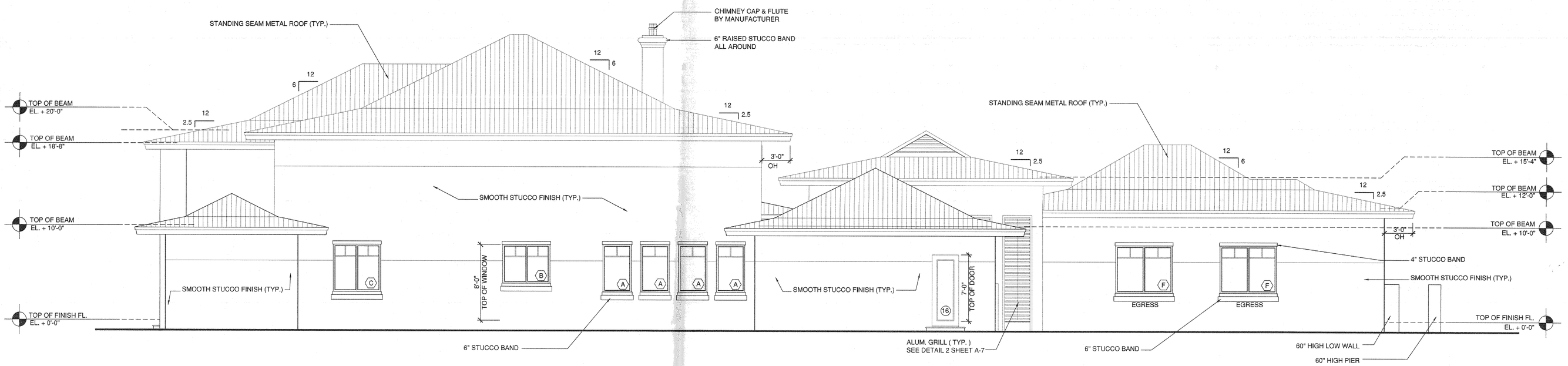

SIDE ELEVATION (North)

SCALE: 3/16" =1'-0"

BELLÓN
architecture

13131 S.W. 132 STREET
SUITE 104
MIAMI, FLORIDA 33186

T. (305) 278-7776
F. (305) 278-7473
WWW.BELLONMILANES.COM
AA-26002616

ARCHITECTURE
LAND PLANNING
INTERIORS

CONSTRUCTION MANAGEMENT

CONSULTANTS

A CUSTOM RESIDENCE FOR:

Mr. AND MRS. R. SANCHEZ / NOLAN RODRIGUEZ

13940 OLD CUTTLER ROAD
PALMETTO BAY, FLORIDA

MARK	DATE	DESCRIPTION

PROJECT No. LB269
DRAWN BY: JP / AM
CHECKED BY: LB
DATE: 06-18-14

STATE OF FLORIDA
LEOPOLDO BELLON
REGISTERED ARCHITECT
10276

LEOPOLDO BELLON, AIA (AR-8737)

SHEET TITLE
ELEVATIONS

A-3

SHEET OF

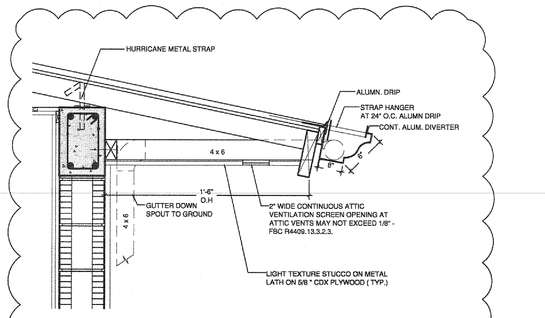

OVERHANG / GUTTER DETAIL

SCALE: 1/2" =1'-0"

1

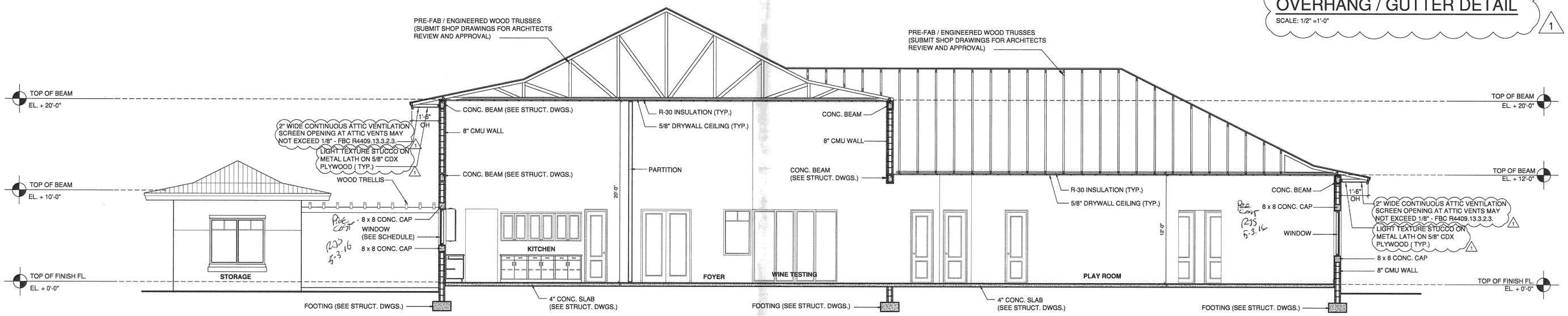

SECTION B

SCALE: 3/16" =1'-0"

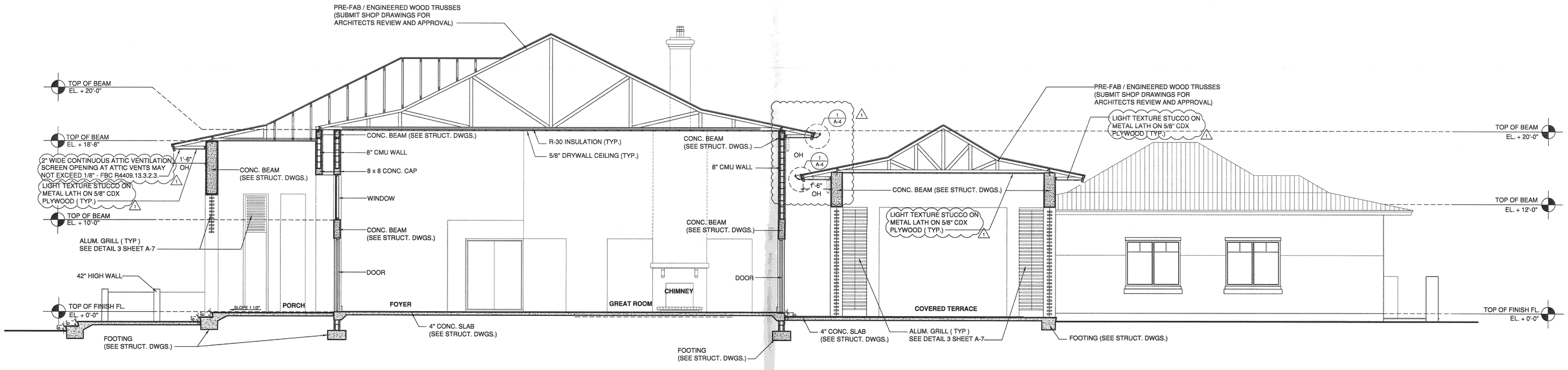

SECTION A

SCALE: 3/16" =1'-0"

BELLON architecture

13131 S.W. 132 STREET
SUITE 104
MIAMI, FLORIDA 33186

T. (305) 278-7776
F. (305) 278-7473
WWW.BELLONMILANES.COM
AA-26002616

ARCHITECTURE
LAND PLANNING
INTERIORS
CONSTRUCTION MANAGEMENT

CONSULTANTS

A CUSTOM RESIDENCE FOR:

Mr. AND MRS. R. SANCHEZ / NOLAN RODRIGUEZ

13940 OLD CUTLER ROAD
PALMETTO BAY, FLORIDA

MARK	DATE	DESCRIPTION
1	12-17-15	B.D.C.

PROJECT No. LB269
DRAWN BY: JP / AM
CHECKED BY: LB
DATE: 05-18-14

STATE OF FLORIDA LEOPOLDO BELLON AR0008737 REGISTERED ARCHITECT

LEOPOLDO BELLON, AIA (AR-0737)

SHEET TITLE

SECTIONS

A-4

SHEET OF

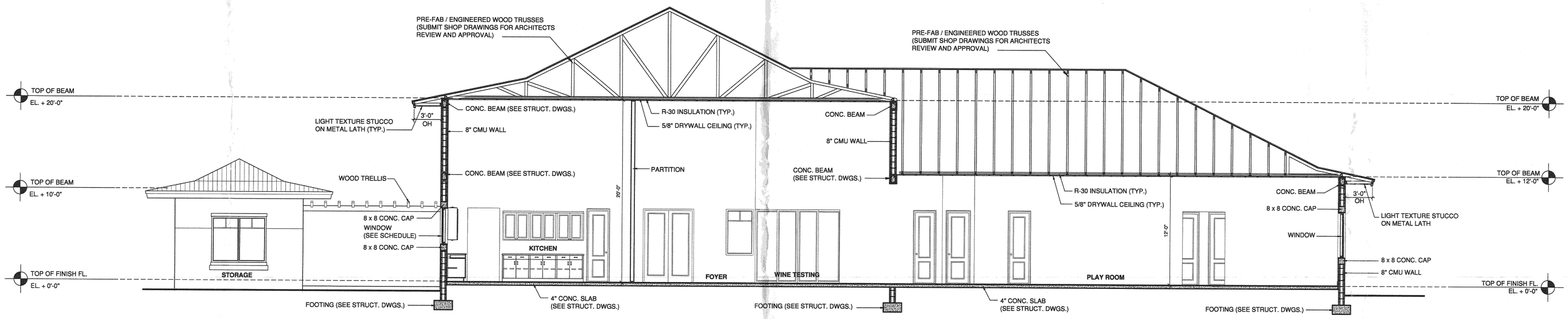

SECTION B

SCALE: 3/16" =1'-0"

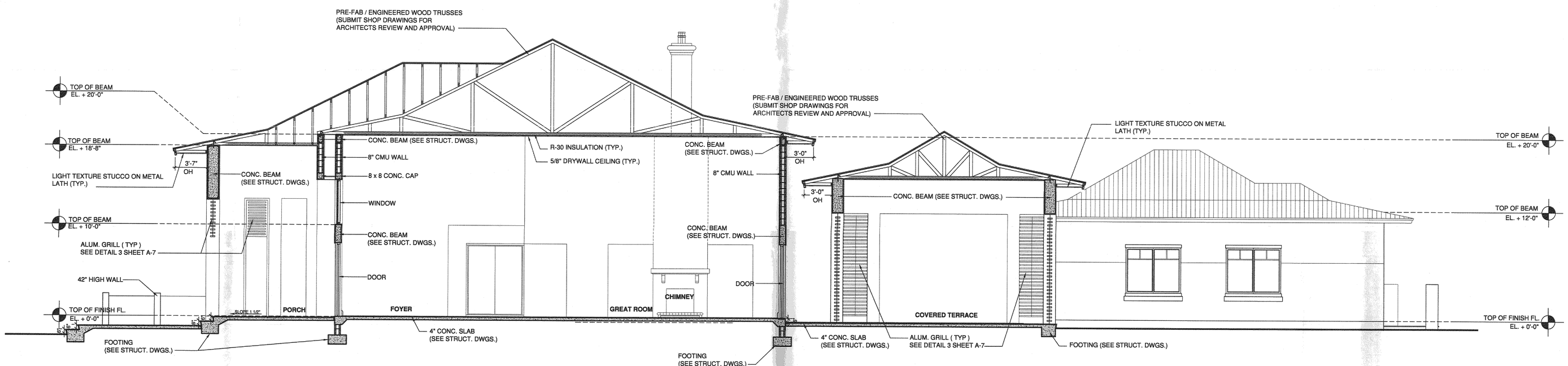

SECTION A

SCALE: 3/16" =1'-0"

BELLON architecture

13131 S.W. 132 STREET
SUITE 104
MIAMI, FLORIDA 33186

T. (305) 278-7776
F. (305) 278-7473
WWW.BELLONMILANES.COM
AA-26002616

ARCHITECTURE
LAND PLANNING
INTERIORS

CONSTRUCTION MANAGEMENT

CONSULTANTS

A CUSTOM RESIDENCE FOR:

Mr. AND MRS. R. SANCHEZ / NOLAN RODRIGUEZ

13940 OLD CUTLER ROAD
PALMETTO BAY, FLORIDA

MARK	DATE	DESCRIPTION

PROJECT No.	LB269
DRAWN BY:	JP / AM
CHECKED BY:	LB
DATE:	06-18-14

STATE OF FLORIDA
LEOPOLDO BELLON
AR-8737
10-27-17
REGISTERED ARCHITECT

LEOPOLDO BELLON, AIA (AR-8737)

SHEET TITLE

SECTIONS

A-4

SHEET OF

UPB
10-26-15
BLDG DIV

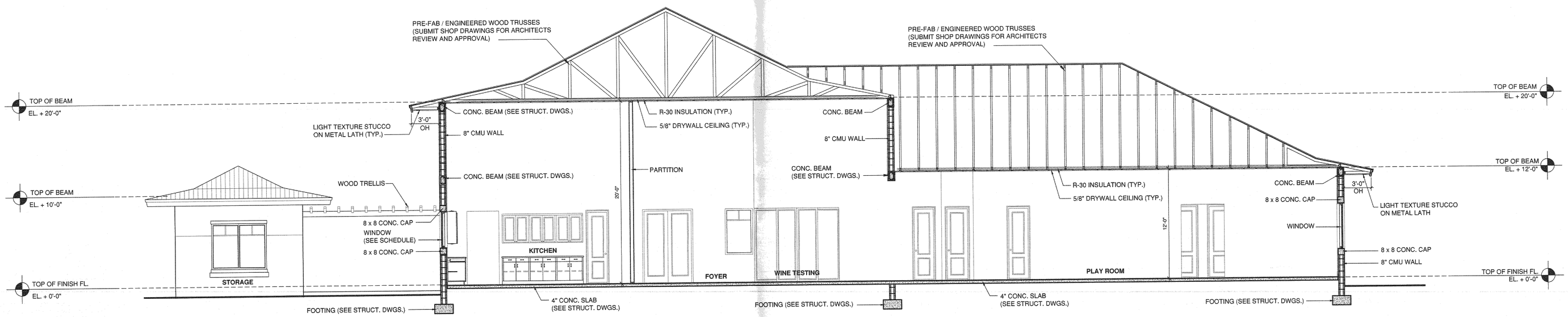

SECTION B

SCALE: 3/16" =1'-0"

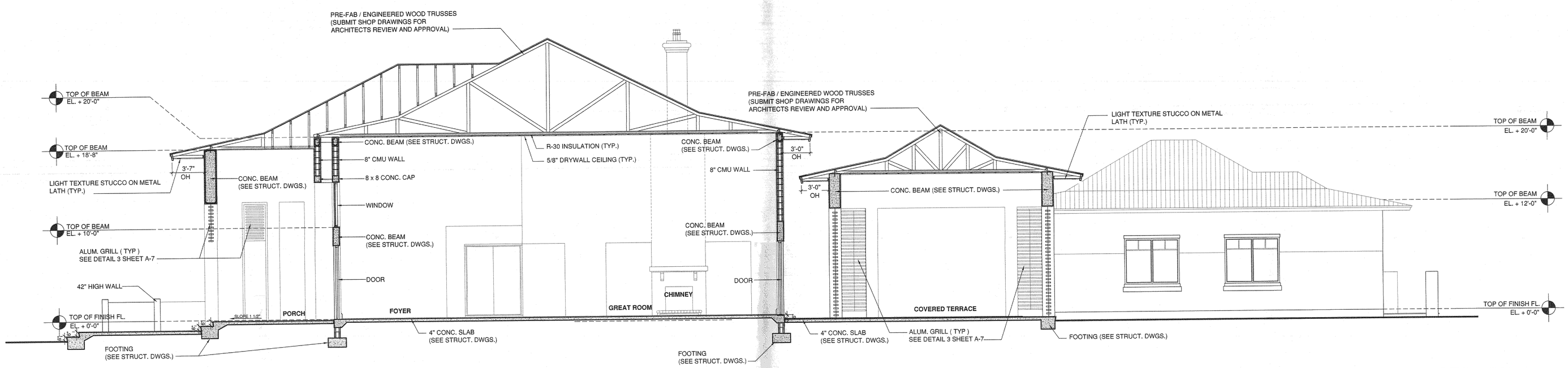

SECTION A

SCALE: 3/16" =1'-0"

BELLÓN
architecture

13131 S.W. 132 STREET
SUITE 104
MIAMI, FLORIDA 33186

T. (305) 278-7776
F. (305) 278-7473
WWW.BELLONMIAMI.COM
AA-26002616

ARCHITECTURE
LAND PLANNING
INTERIORS
CONSTRUCTION MANAGEMENT

CONSULTANTS

A CUSTOM RESIDENCE FOR:

Mr. AND MRS. R. SANCHEZ / NOLAN RODRIGUEZ

13940 OLD CUTTLER ROAD
PALMETTO BAY, FLORIDA

MARK	DATE	DESCRIPTION

PROJECT No. LB269
DRAWN BY: JP / AM
CHECKED BY: LB
DATE: 06-18-14

STATE OF FLORIDA
LEOPOLDO BELLON
REGISTERED ARCHITECT
No. 8737

LEOPOLDO BELLON, AIA (AR-8737)

SHEET TITLE
SECTIONS

A-4

SHEET OF

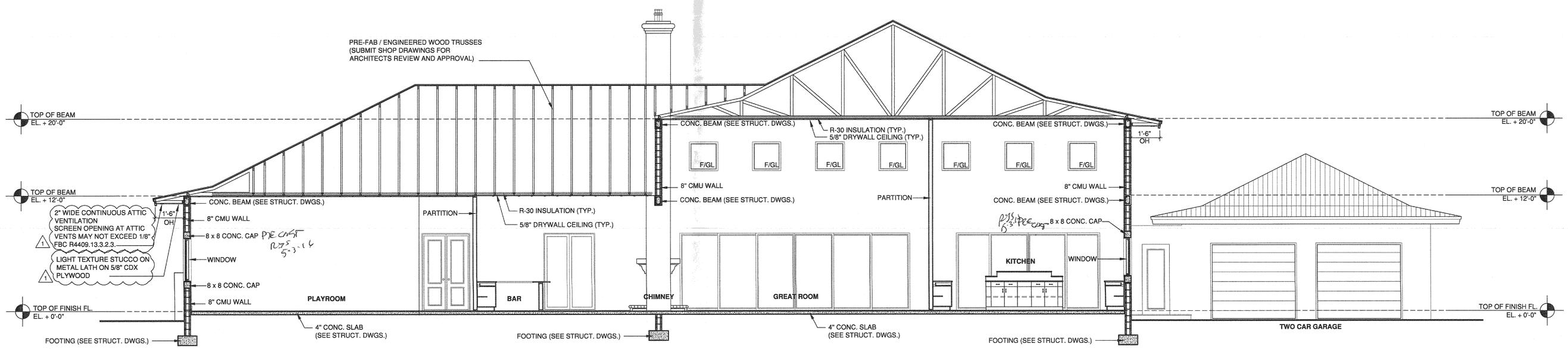

SECTION D

SCALE: 3/16" =1'-0"

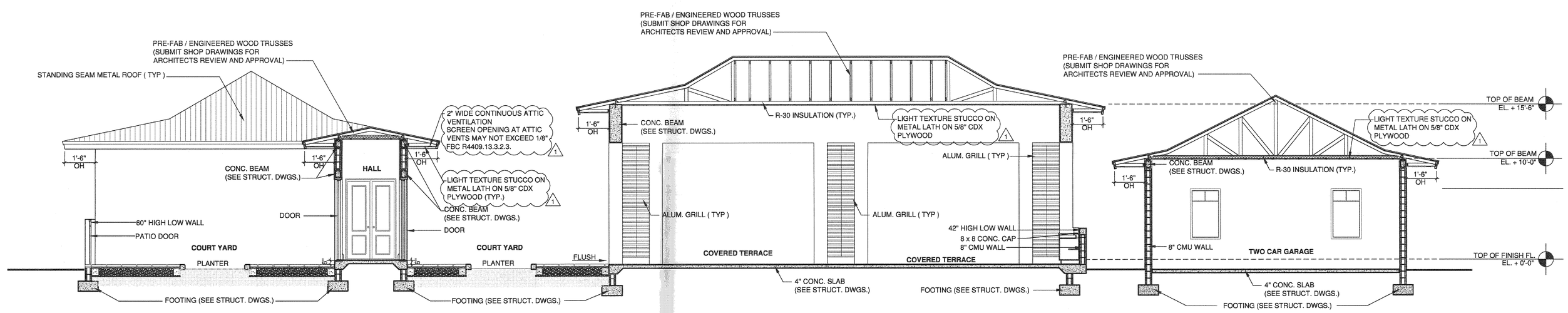

SECTION C

SCALE: 3/16" =1'-0"

BELLÓN architecture

13131 S.W. 132 STREET
SUITE 104
MIAMI, FLORIDA 33186

T. (305) 278-7776
F. (305) 278-7473
WWW.BELLONMIAMI.COM
AA-26002616

ARCHITECTURE
LAND PLANNING
INTERIORS
CONSTRUCTION MANAGEMENT

CONSULTANTS

A CUSTOM RESIDENCE FOR:

Mr. AND MRS. R. SANCHEZ / NOLAN RODRIGUEZ

13940 OLD CUTTLER ROAD
PALMETTO BAY, FLORIDA

MARK	DATE	DESCRIPTION
1	12-17-15	B.D.C

PROJECT No.	LB269
DRAWN BY:	JP / AM
CHECKED BY:	LB
DATE:	06-18-14

STATE OF FLORIDA
LEOPOLDO BELLON
ARCHITECT
LICENSE NO. AR-0737

LEOPOLDO BELLON, AIA (AR-0737)

SHEET TITLE

SECTIONS

A-5

SHEET OF

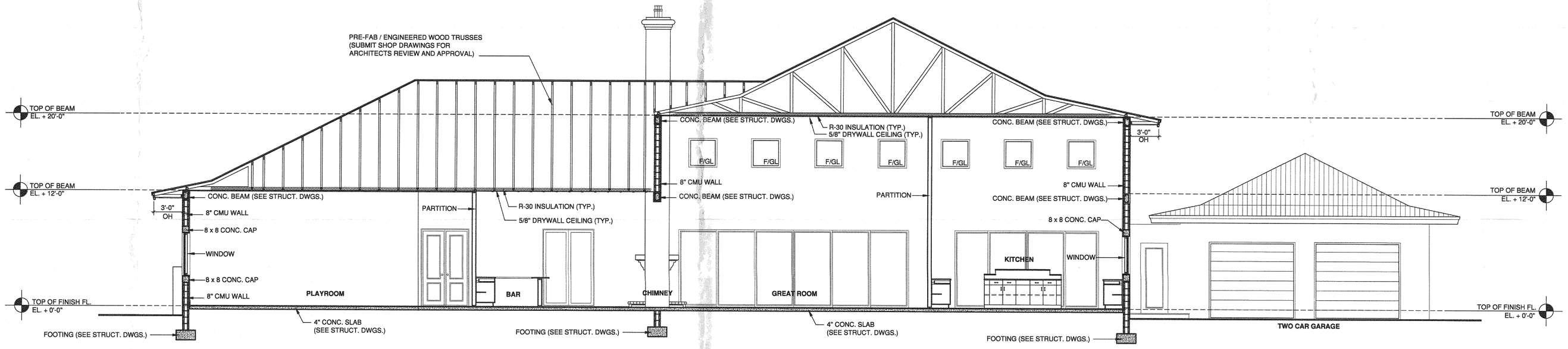

SECTION D

SCALE: 3/16" =1'-0"

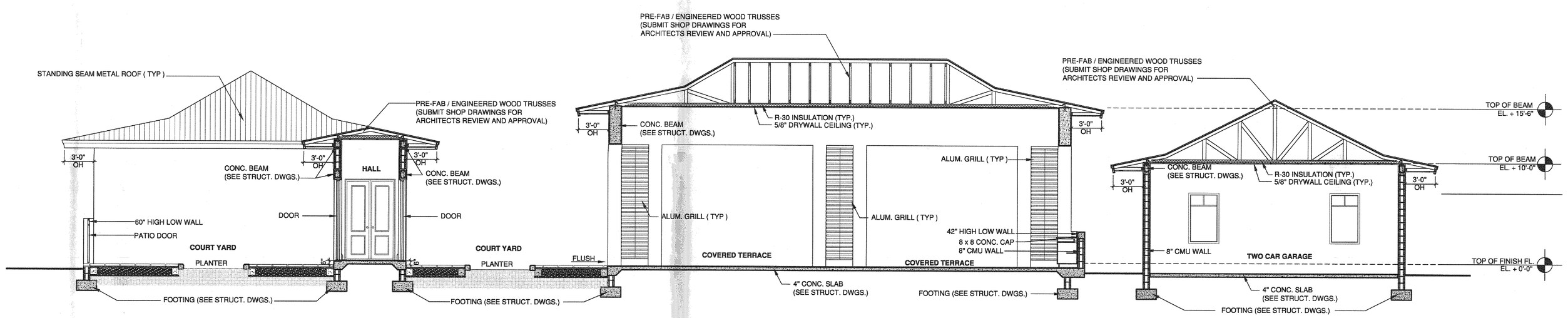

SECTION C

SCALE: 3/16" =1'-0"

BELLON architecture

13131 S.W. 132 STREET
SUITE 104
MIAMI, FLORIDA 33186

T. (305) 278-7776
F. (305) 278-7475
WWW.BELLONMILANES.COM
AA-26002616

ARCHITECTURE
LAND PLANNING
INTERIORS
CONSTRUCTION MANAGEMENT

CONSULTANTS

A CUSTOM RESIDENCE FOR:

Mr. AND MRS. R. SANCHEZ / NOLAN RODRIGUEZ
13940 OLD CUTTLER ROAD
PALMETTO BAY, FLORIDA

MARK	DATE	DESCRIPTION

PROJECT No. LB269
DRAWN BY: JP / AM
CHECKED BY: LB
DATE: 06-18-14

STATE OF FLORIDA
LICENSED
10-27-14
AR8737
REGISTERED ARCHITECT
LEOPOLDO BELLON (AR 0008737)

SHEET TITLE

SECTIONS

A-5

SHEET OF

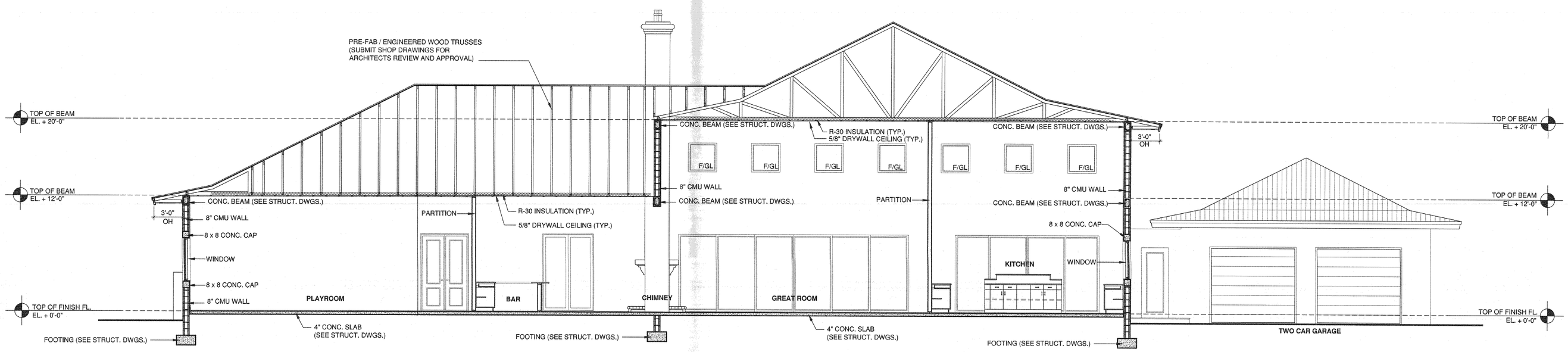

SECTION D

SCALE: 3/16" =1'-0"

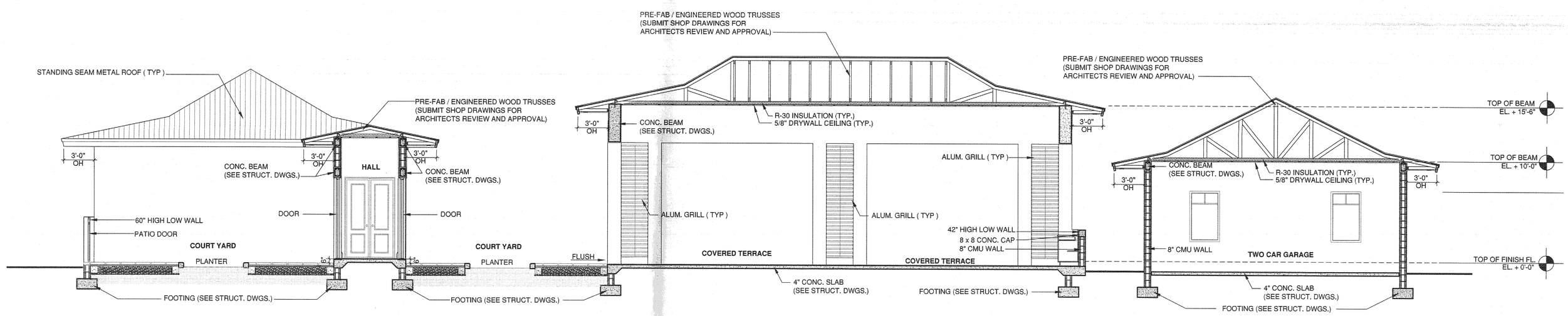

SECTION C

SCALE: 3/16" =1'-0"

BELLÓN
architecture

13131 S.W. 132 STREET
SUITE 104
MIAMI, FLORIDA 33186

T. (305) 278-7776
F. (305) 278-7473
WWW.BELLONMILANES.COM
AA-26002616

ARCHITECTURE
LAND PLANNING
INTERIORS
CONSTRUCTION MANAGEMENT

CONSULTANTS

A CUSTOM RESIDENCE FOR:

Mr. AND MRS. R. SANCHEZ / NOLAN RODRIGUEZ
13940 OLD CUTTLER ROAD
PALMETTO BAY, FLORIDA

MARK	DATE	DESCRIPTION

PROJECT No. LB269
DRAWN BY: JP / AM
CHECKED BY: LB
DATE: 06-18-14

STATE OF FLORIDA
LEOPOLDO BELLON
REGISTERED
AR-8737
10-22-15

LEOPOLDO BELLON, AIA (AR-8737)

SHEET TITLE
SECTIONS
A-5

SHEET OF

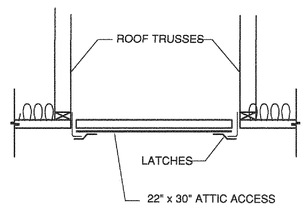

ATTIC ACCESS MUST BE LOCATED AT A POINT WHERE THERE IS A MINIMUM 30" HEADROOM. FBC'10 R807.1

1 ATTIC ACCESS DETAIL
N.T.S. (FOR LOCATION SEE FLOOR PLAN)

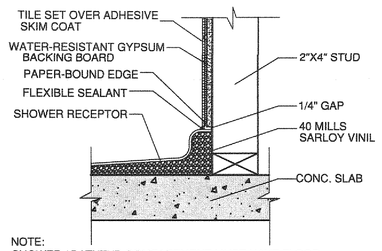

NOTE:
-SHOWER / BATHTUB COMPARTMENT MUST HAVE FLOOR SMOOTH, CORROSION RESISTANT AND NONABSORBENT WATER-RESISTANT MATERIALS (DUROCK) TO A HEIGHT OF NOT LESS THAN 70 INCHES ABOVE THE COMPARTMENT FLOOR AT THE DRAIN, AS PER F.B.C. 2010 ED.

2 WOOD BACKING DETAIL
N.T.S.

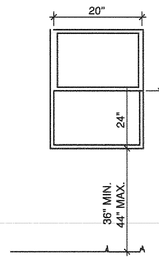

SECOND MEANS OF SCAPE WINDOWS

EGRESS WINDOW AS SECOND MEANS OF ESCAPE TO HAVE AN OUTSIDE WINDOW OR DOOR OPERABLE FROM THE INSIDE WITHOUT THE USE OF TOOLS AND PROVIDING A CLEAR OPENING OF NOT LESS THAN 20 IN. IN WIDTH, 24 IN. IN HEIGHT AND 5.7 SQ.FT. IN AREA. AS PER SECTION R310.1.3 F.B.C 2010 ED

MAXIMUM HEIGHT FROM FLOOR:

THE EMERGENCY ESCAPE AND RESCUE OPENING SHALL HAVE A SILL HEIGHT OF NOT MORE THAN 44 INCHES (1118 MM) ABOVE THE FLOOR AS PER SECTION R310 F.B.C 2010 ED

3 EGRESS WINDOW
N.T.S.

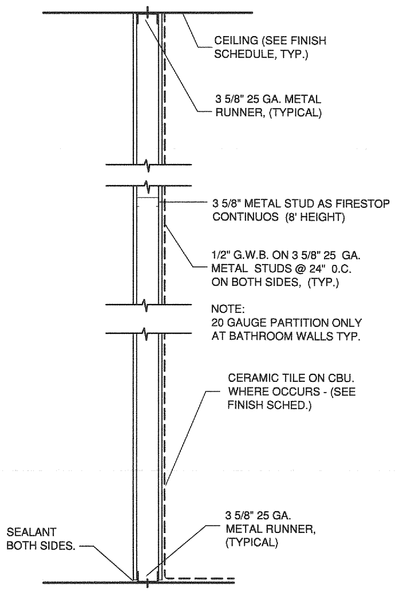

4 NON-RATED PARTITION
N.T.S.

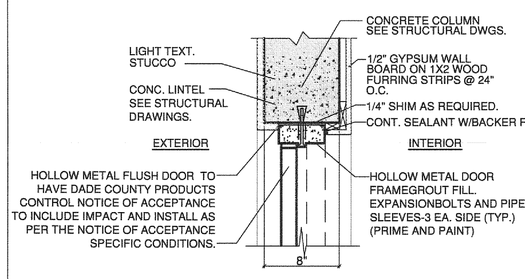

5 DOOR JAMB DETAIL
N.T.S.

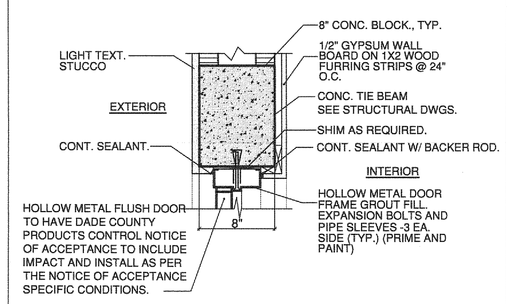

6 PRECAST WINDOWS ANCHOR DETAIL
N.T.S.

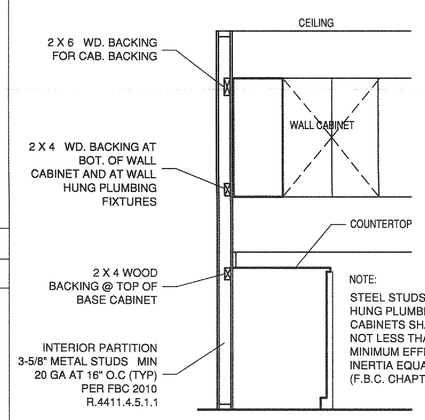

8 WOOD BAKING DETAIL
N.T.S.

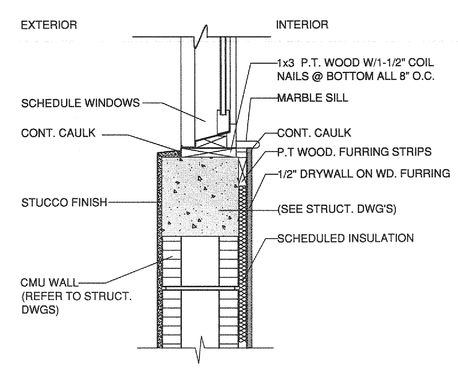

9 WINDOW SILL & ANCHOR DETAIL
N.T.S.

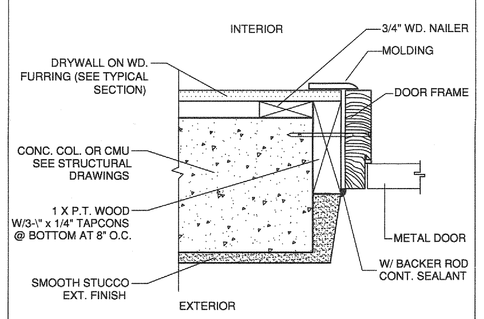

7 DOOR HEAD DETAIL
N.T.S.

10 DOOR BUCK DETAIL
N.T.S.

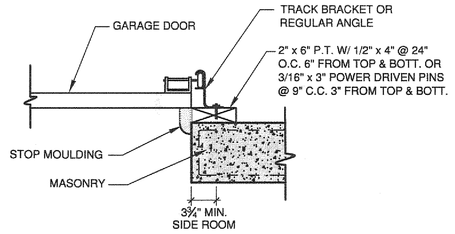

11 GARAGE DOOR JAMB DETAIL
N.T.S.

1. ROOF DIAPHRAGM SHALL COMPLY WITH THE DESIGN RECOMMENDATION OF " A.P.A. DESIGN/ CONSTRUCTION GUIDE - DIAPHRAGMS" AND THE LOCAL BUILDING CODE .
2. PLYWOOD ROOF DECKING SHALL BE 5/8" MINIMUM THICKNESS, AND SHALL BE CONTINUOUS OVER TWO OR MORE SPANS, WITH FACE GRAIN PERPENDICULAR TO THE SUPPORTS.
3. CONNECT PLYWOOD DIAPHRAGM TO STRUCTURE WITH 10d GALVANIZED NAILS, SPACED AT 4" o.c. MAX AT EDGES AND AT 4" o.c. ALONG INTERMEDIATE SUPPORTS AND 4" OC DIAPHRAGM BOUNDARY.
4. INSPECTIONS : SHALL COMPLY WITH THE LOCAL BUILDING CODE REQUIREMENTS FOR INSPECTIONS (BY THE MUNICIPALITY , ARCHITECTS OR ENGINEER) OF SPECIFIED COMPONENTES OF THE ROOF STRUCTURE REQUIRING INSPECTIONS .

PLYWOOD SHEATHING NOTES:
5/8" CDX EXTERIOR PLYWOOD NAILED WITH #10D-NAILS SPACED 4" O.C EDGE 6"O.C INTERIOR TYPICAL AND W/10D NAILS @ 4" # 30 FELT 2" MIN. LAPPED, TIN CAPS32 GA. X 1 5/8"DIAM. 6" ON CENTER AT LAPS AND 12" ON CENTER IN THE FIELD, CAP SHEET, HOT MOPPED, BACKNAILED AT 12" ON CENTER.

1

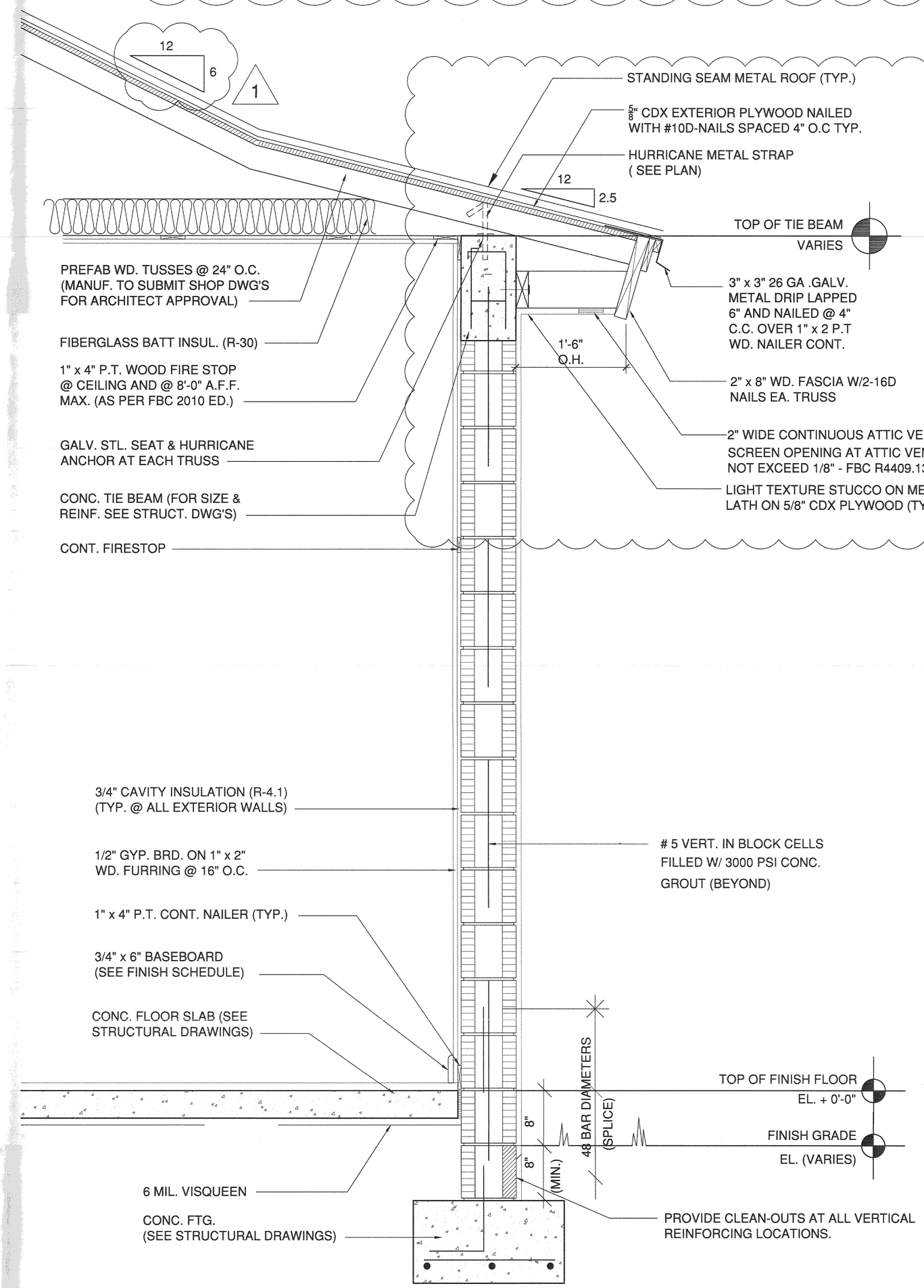

TYPICAL WALL SECTION
N.T.S.

BELLON architecture
13131 S.W. 132 STREET
SUITE 104
MIAMI, FLORIDA 33186
T. (305) 278-7776
F. (305) 278-7473
WWW.BELLONMILANES.COM
AA-26002616
ARCHITECTURE
LAND PLANNING
INTERIORS
CONSTRUCTION MANAGEMENT

CONSULTANTS

A CUSTOM RESIDENCE FOR:
Mr. AND MRS. R. SANCHEZ / NOLAN RODRIGUEZ
13940 OLD CUTTLER ROAD
PALMETTO BAY, FLORIDA

MARK	DATE	DESCRIPTION
1	12-17-15	B.D.C

PROJECT No. LB269
DRAWN BY: JP / AM
CHECKED BY: LB
DATE: 06-18-14

STATE OF FLORIDA LEOPOLDO BELLON

LEOPOLDO BELLON, AIA (AR-8737)

SHEET TITLE
DETAILS
A-6
SHEET OF

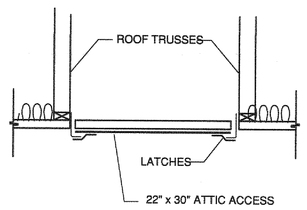

ATTIC ACCESS MUST BE LOCATED AT A POINT WHERE THERE IS A MINIMUM 30" HEADROOM. FBC'10 R807.1

1 ATTIC ACCESS DETAIL
N.T.S. (FOR LOCATION SEE FLOOR PLAN)

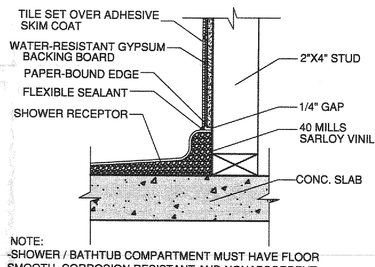

NOTE:
-SHOWER / BATHTUB COMPARTMENT MUST HAVE FLOOR SMOOTH, CORROSION RESISTANT AND NONABSORBENT WATER-RESISTANT MATERIALS (DUROCK) TO A HEIGHT OF NOT LESS THAN 70 INCHES ABOVE THE COMPARTMENT FLOOR AT THE DRAIN, AS PER F.B.C. 2010 ED.

2 WOOD BACKING DETAIL
N.T.S.

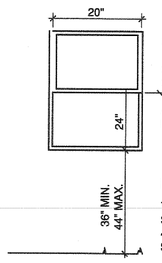

SECOND MEANS OF SCAPE WINDOWS

EGRESS WINDOW AS SECOND MEANS OF ESCAPE TO HAVE AN OUTSIDE WINDOW OR DOOR OPERABLE FROM THE INSIDE WITHOUT THE USE OF TOOLS AND PROVIDING A CLEAR OPENING OF NOT LESS THAN 20 IN. IN WIDTH, 24 IN. IN HEIGHT AND 5.7 SQ.FT. IN AREA. AS PER SECTION R310.1.3 F.B.C 2010 ED

MAXIMUM HEIGHT FROM FLOOR:

THE EMERGENCY ESCAPE AND RESCUE OPENING SHALL HAVE A SILL HEIGHT OF NOT MORE THAN 44 INCHES (1118 MM) ABOVE THE FLOOR AS PER SECTION R310 F.B.C 2010 ED

3 EGRESS WINDOW
N.T.S.

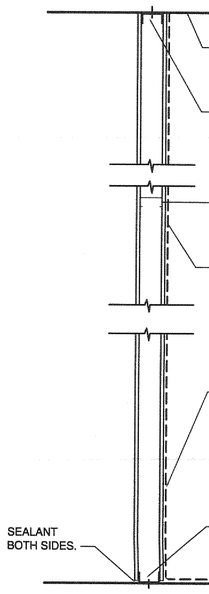

4 NON-RATED PARTITION
N.T.S.

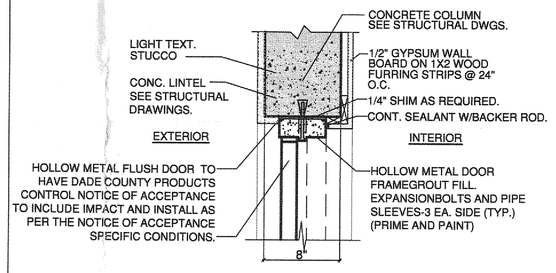

5 DOOR JAMB DETAIL
N.T.S.

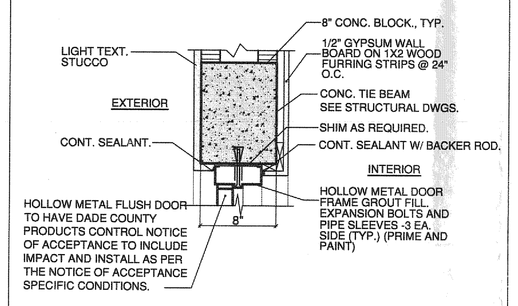

6 PRECAST WINDOWS ANCHOR DETAIL
N.T.S.

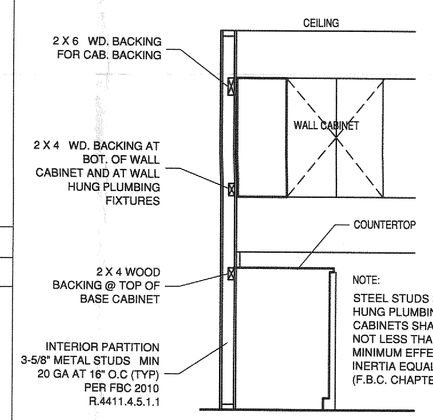

8 WOOD BAKING DETAIL
N.T.S.

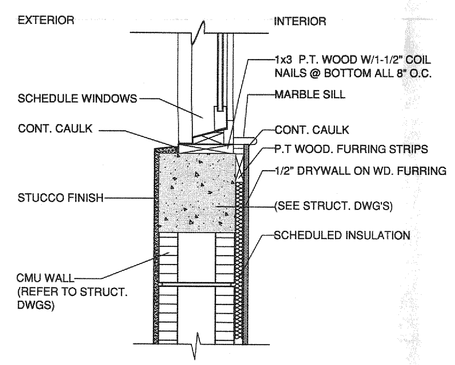

9 WINDOW SILL & ANCHOR DETAIL
N.T.S.

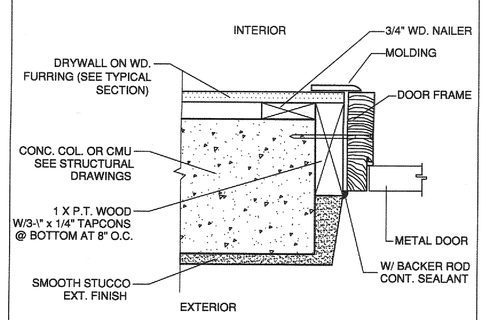

10 DOOR BUCK DETAIL
N.T.S.

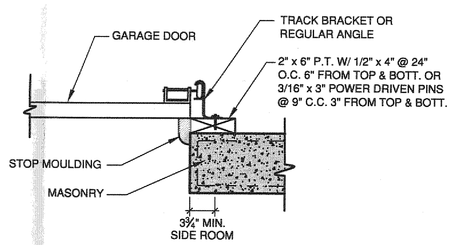

11 GARAGE DOOR JAMB DETAIL
N.T.S.

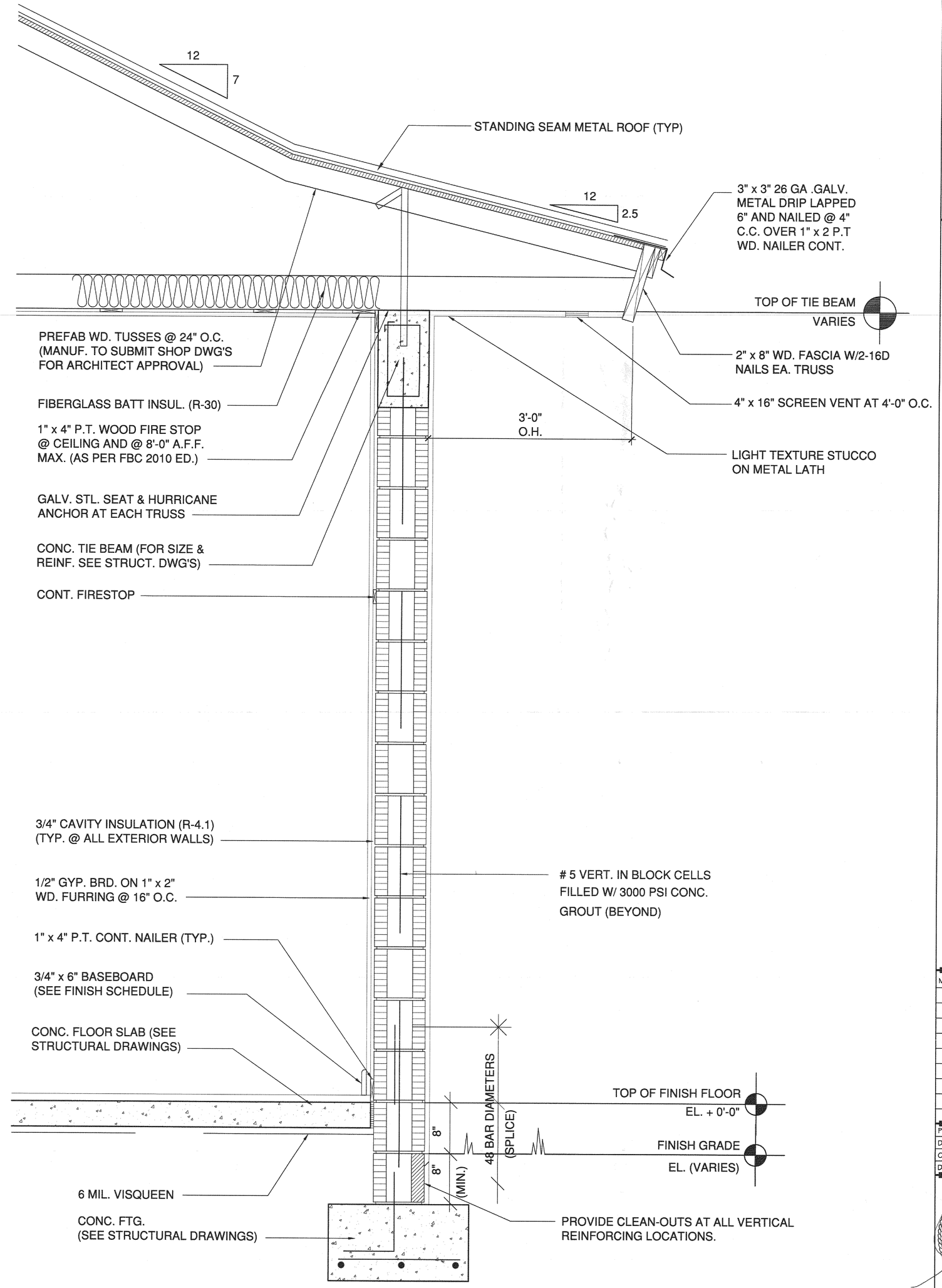

TYPICAL WALL SECTION
N.T.S.

BELLON architecture
13131 S.W. 132 STREET
SUITE 104
MIAMI, FLORIDA 33186
T. (305) 278-7776
F. (305) 278-7473
WWW.BELLONWILANES.COM
AA-26002616
ARCHITECTURE
LAND PLANNING
INTERIORS
CONSTRUCTION MANAGEMENT

CONSULTANTS

A CUSTOM RESIDENCE FOR:
Mr. AND MRS. R. SANCHEZ / NOLAN RODRIGUEZ
13940 OLD CUTTLER ROAD
PALMETTO BAY, FLORIDA

MARK	DATE	DESCRIPTION

PROJECT No. LB269
DRAWN BY: JP / AM
CHECKED BY: LB
DATE: 06-18-14

STATE OF FLORIDA LEOPOLDO BELLON 18737 REGISTERED ARCHITECT

LEOPOLDO BELLON, AIA (AR-8737)

SHEET TITLE
DETAILS
A-6
SHEET OF

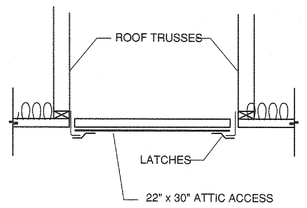

ATTIC ACCESS MUST BE LOCATED AT A POINT WHERE THERE IS A MINIMUM 30" HEADROOM. FBC'10 R807.1

1 ATTIC ACCESS DETAIL
N.T.S. (FOR LOCATION SEE FLOOR PLAN)

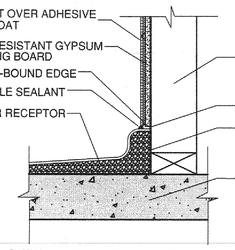

NOTE:
-SHOWER / BATHTUB COMPARTMENT MUST HAVE FLOOR SMOOTH, CORROSION RESISTANT AND NONABSORBENT WATER-RESISTANT MATERIALS (OUROCK) TO A HEIGHT OF NOT LESS THAN 70 INCHES ABOVE THE COMPARTMENT FLOOR AT THE DRAIN, AS PER F.B.C. 2010 ED.

2 WOOD BACKING DETAIL
N.T.S.

SECOND MEANS OF SCAPE WINDOWS

EGRESS WINDOW AS SECOND MEANS OF ESCAPE TO HAVE AN OUTSIDE WINDOW OR DOOR OPERABLE FROM THE INSIDE WITHOUT THE USE OF TOOLS AND PROVIDING A CLEAR OPENING OF NOT LESS THAN 20 IN. IN WIDTH, 24 IN. IN HEIGHT AND 5.7 SQ.FT. IN AREA. AS PER SECTION R310.1.3 F.B.C 2010 ED

MAXIMUM HEIGHT FROM FLOOR:

THE EMERGENCY ESCAPE AND RESCUE OPENING SHALL HAVE A SILL HEIGHT OF NOT MORE THAN 44 INCHES (1118 MM) ABOVE THE FLOOR AS PER SECTION R310 F.B.C 2010 ED

3 EGRESS WINDOW
N.T.S.

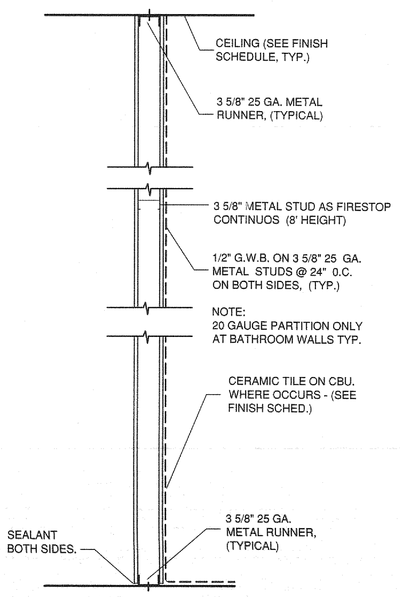

4 NON-RATED PARTITION
N.T.S.

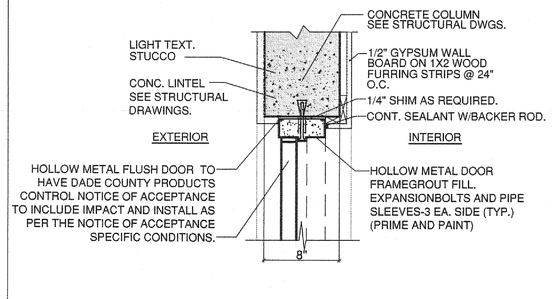

5 DOOR JAMB DETAIL
N.T.S.

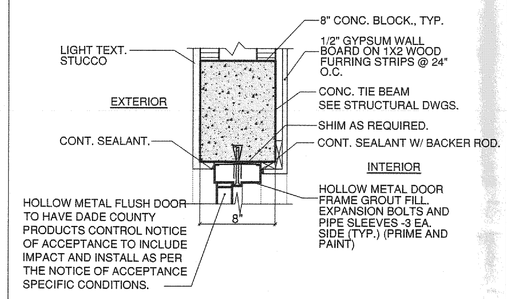

6 PRECAST WINDOWS ANCHOR DETAIL
N.T.S.

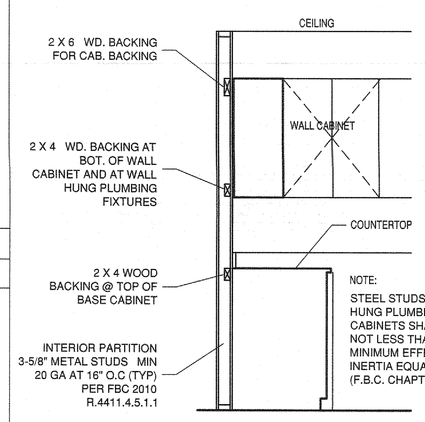

8 WOOD BAKING DETAIL
N.T.S.

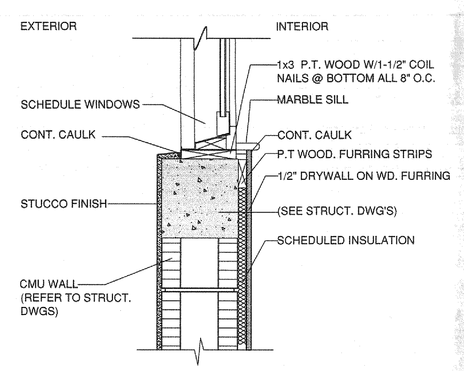

9 WINDOW SILL & ANCHOR DETAIL
N.T.S.

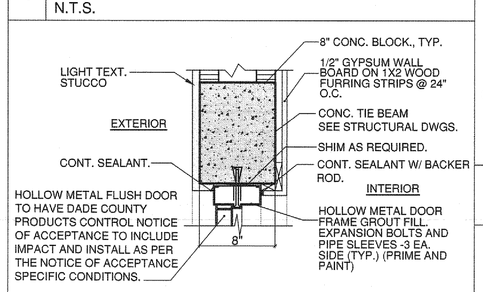

7 DOOR HEAD DETAIL
N.T.S.

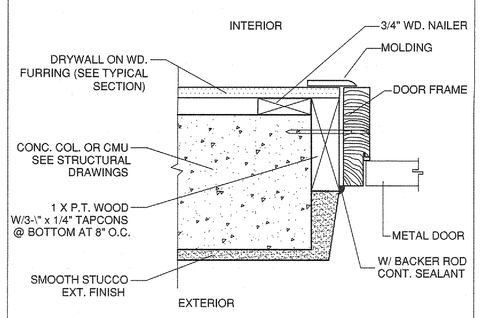

10 DOOR BUCK DETAIL
N.T.S.

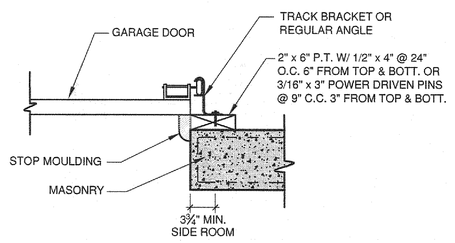

11 GARAGE DOOR JAMB DETAIL
N.T.S.

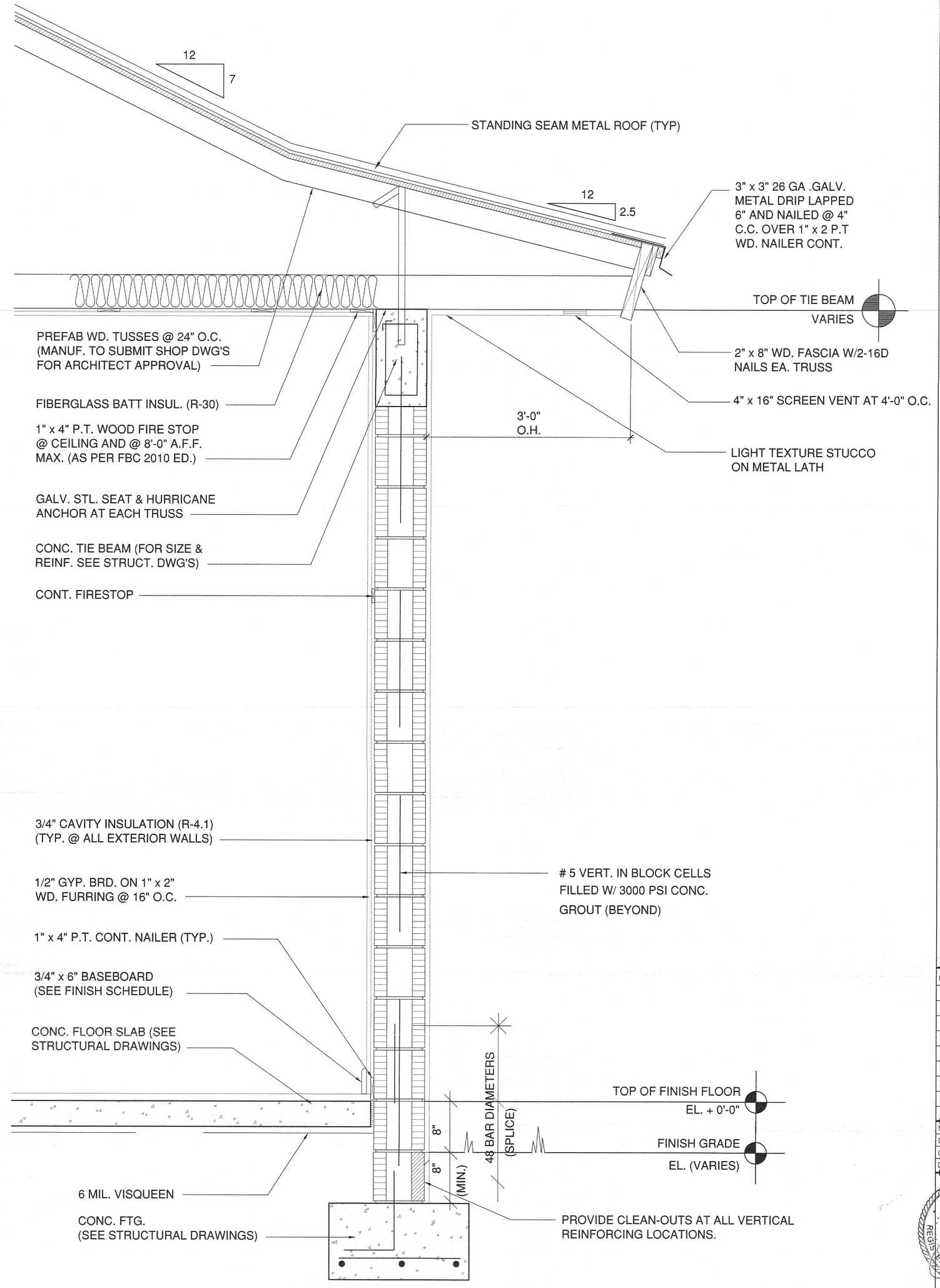

TYPICAL WALL SECTION
N.T.S.

BELLÓN architecture
13131 S.W. 132 STREET
SUITE 104
MIAMI, FLORIDA 33186
T. (305) 278-7776
F. (305) 278-7473
WWW.BELLONMIAMI.COM
AA-26002616
ARCHITECTURE
LAND PLANNING
INTERIORS
CONSTRUCTION MANAGEMENT

CONSULTANTS

A CUSTOM RESIDENCE FOR:
Mr. AND MRS. R. SANCHEZ / NOLAN RODRIGUEZ
13940 OLD CUTTLER ROAD
PALMETTO BAY, FLORIDA

MARK	DATE	DESCRIPTION

PROJECT No. LB269
DRAWN BY: JP / AM
CHECKED BY: LB
DATE: 06-18-14

STATE OF FLORIDA LEOPOLDO BELLON REGISTERED ARCHITECT 10221

LEOPOLDO BELLON, AIA (AR-8737)

SHEET TITLE
DETAILS

A-6

SHEET OF

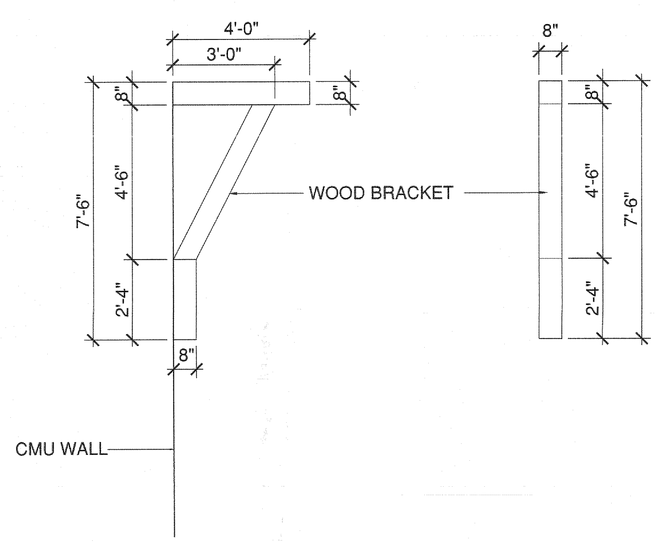

3 WOOD BRACKET DETAIL
SCALE: 1" =1'-0"

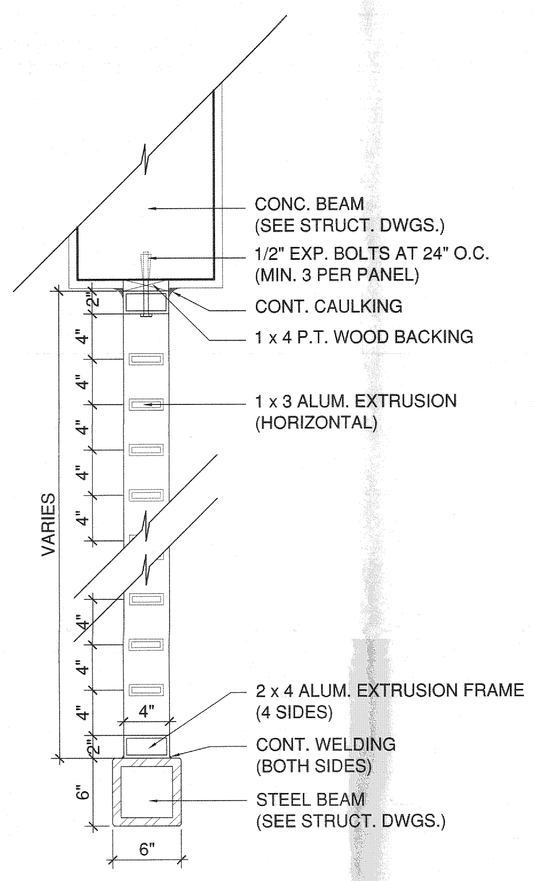

2 TYPICAL ALUM. GRILLE DETAIL
SCALE: 1" =1'-0"

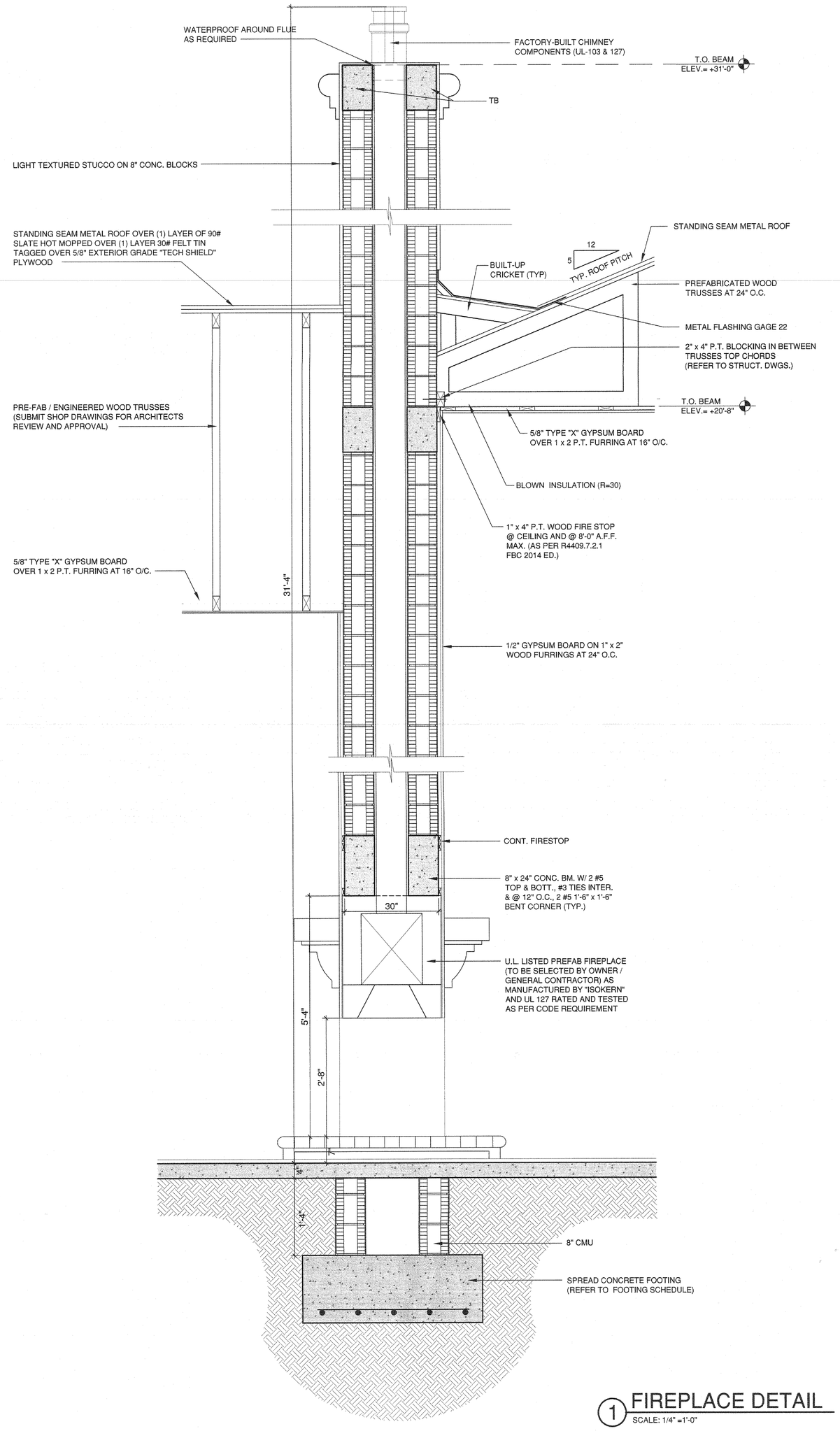

1 FIREPLACE DETAIL
SCALE: 1/4" =1'-0"

BELLÓN architecture
13131 S.W. 132 STREET
SUITE 104
MIAMI, FLORIDA 33186
T. (305) 278-7776
F. (305) 278-7473
WWW.BELLONMILANES.COM
AA-26002616
ARCHITECTURE
LAND PLANNING
INTERIORS
CONSTRUCTION MANAGEMENT

CONSULTANTS

A CUSTOM RESIDENCE FOR:
Mr. AND MRS. R. SANCHEZ / NOLAN RODRIGUEZ
13940 OLD CUTTLER ROAD
PALMETTO BAY, FLORIDA

MARK	DATE	DESCRIPTION

PROJECT No. LB269
DRAWN BY: JP / AM
CHECKED BY: LB
DATE: 06-18-14

STATE OF FLORIDA
LEOPOLDO BELLON
AR-8737
REGISTERED ARCHITECT
1022/5

LEOPOLDO BELLON, AIA (AR-8737)

SHEET TITLE
DETAILS
A-7
SHEET OF

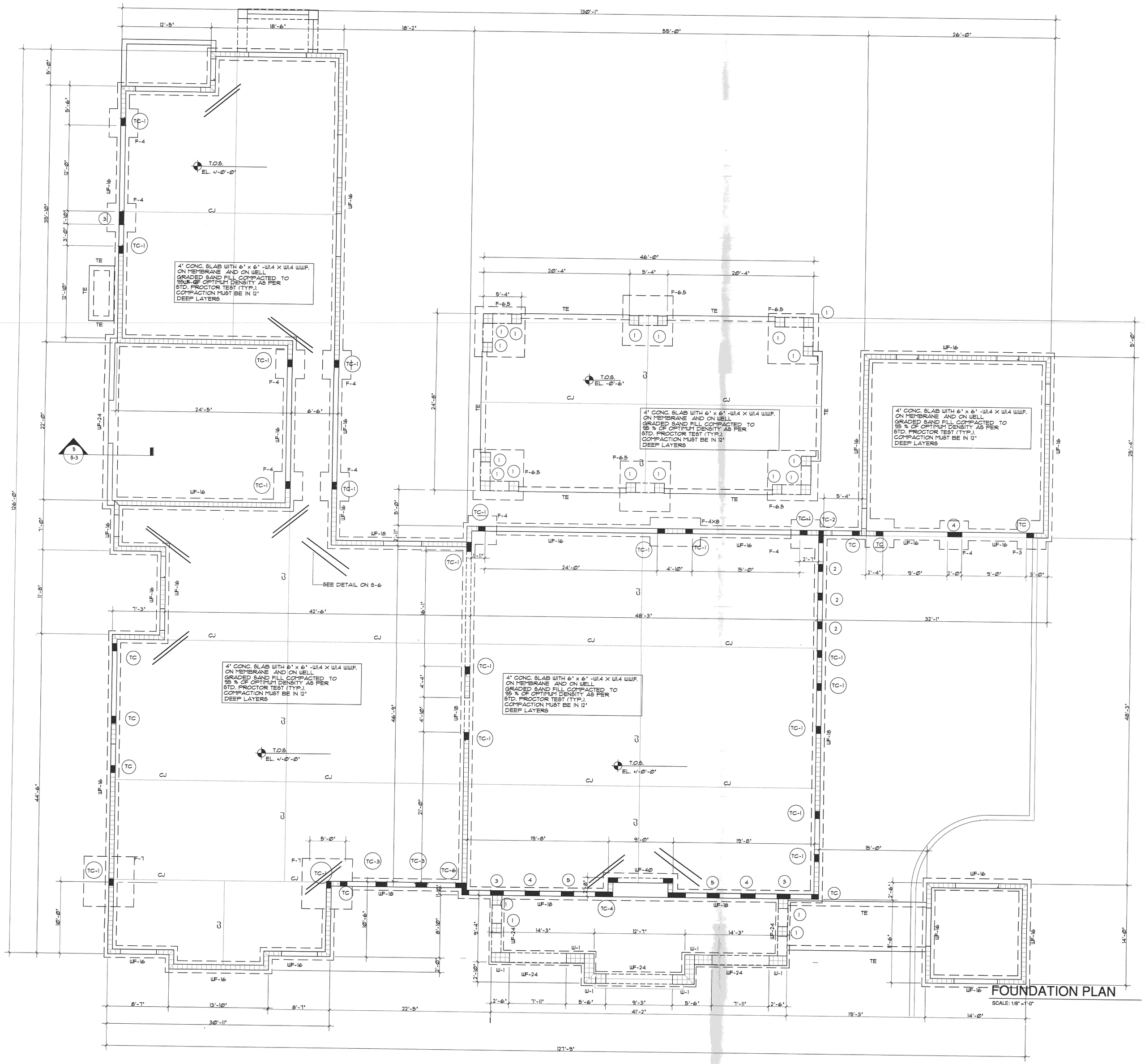

FOUNDATION PLAN

SCALE: 1/8" =1'-0"

SOIL STATEMENT

SOIL CONDITION AT SITE BY VISUAL INSPECTION INDICATES AN ALLOWABLE BEARING CAPACITY OF 2000 P.S.F. (UNDISTURBED SAND AND/OR ROCK.)
UPON COMPLETION OF EXCAVATION WE WILL VISUALLY INSPECT THE PREMISES TO SUBMIT A LETTER CERTIFYING THAT TO THE BEST OF OUR PROFESSIONAL KNOWLEDGE AND BELIEF THE CONDITIONS ENCOUNTERED ARE SIMILAR TO THOSE DESCRIBED ABOVE

MASONRY WALL.
CMU WALL 12'-0" SHALL BE REINFORCED W/ #5 @ 32" O.C.
CMU WALL 20'-0" SHALL BE REINFORCED W/ #6 @ 24" O.C.
W-1: 16" CMU WALL W/ #5@ 8" O.C.

T.O.F. ELEVATION -1'-4"

FOUNDATION PLAN

SCALE: 3/16" =1'-0"

JOSE LUIS GUZMAN
LICENSE
No. 56138
STATE OF FLORIDA
PROFESSIONAL ENGINEER

JOSE L GUZMAN P.E.
4869 SW 75TH AVENUE
MIAMI, FLORIDA 33155
PE00056138
PHONE: 786-338 1082
FAX: 305-260 0364
EMAIL: JGUZMANALBA@AOL.COM

BELLON
architectur

13131 S.W. 132 STREET
SUITE 104
MIAMI, FLORIDA 33186
T. (305) 278-7776
F. (305) 278-7473
WWW.BELLONMILANES.COM
AA-26002616

ARCHITECTURE
LAND PLANNING
INTERIORS
CONSTRUCTION MANAGEMEN

CONSULTANTS

A CUSTOM RESIDENCE FOR:

Mr. AND MRS. R. SANCHEZ / NOLAN RODRIGUEZ
13940 OLD CUTTLER ROAD
PALMETTO BAY, FLORIDA

MARK	DATE	DESCRIPTION

PROJECT No.
DRAWN BY:
CHECKED BY:
DATE:

LEOPOLDO BELLON, AIA (AR-8737)

SHEET TITLE

S-1

SHEET OF

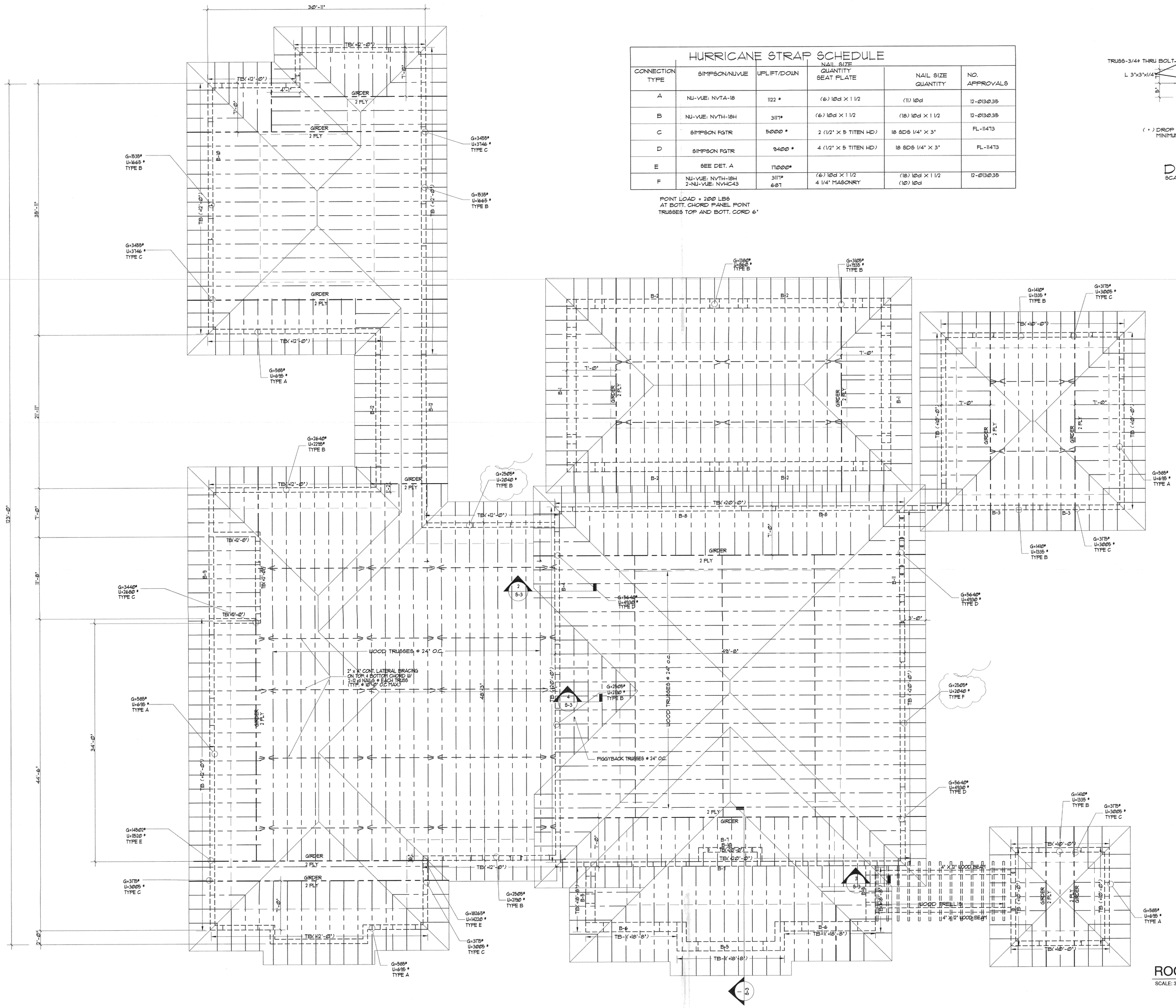

HURRICANE STRAP SCHEDULE

CONNECTION TYPE	SIMPSON/NUVUE	UPLIFT/DOWN	NAIL SIZE QUANTITY SEAT PLATE	NAIL SIZE QUANTITY	NO. APPROVALS
A	NU-VUE: NVTA-18	1122 #	(6) 10d X 1 1/2	(11) 10d	12-0130.35
B	NU-VUE: NVTH-18H	3117#	(6) 10d X 1 1/2	(18) 10d X 1 1/2	12-0130.35
C	SIMPSON FGTR	5000 #	2 (1/2" X 5 TITEN HD)	18 SDS 1/4" X 3"	FL-11473
D	SIMPSON FGTR	9400 #	4 (1/2" X 5 TITEN HD)	18 SDS 1/4" X 3"	FL-11473
E	SEE DET. A	17000#			
F	NU-VUE: NVTH-18H 2-NU-VUE: NVHC43	3117# 681	(6) 10d X 1 1/2 4 1/4" MASONRY	(18) 10d X 1 1/2 (12) 10d	12-0130.35

POINT LOAD = 200 LBS
AT BOTT. CHORD PANEL POINT
TRUSSES TOP AND BOTT. CORD 6'

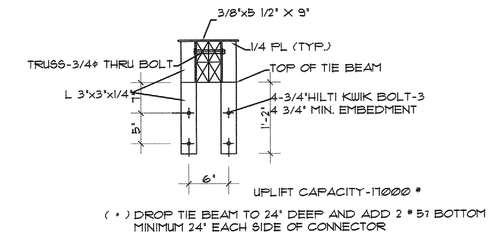

(*) DROP TIE BEAM TO 24" DEEP AND ADD 2 # BT BOTTOM
MINIMUM 24" EACH SIDE OF CONNECTOR

DETAIL A

SCALE: 3/4" = 1'-0"

ROOF FRAMIG PLAN

SCALE: 3/16" =1'-0"

BELLÓN architecture

13131 S.W. 132 STREET
SUITE 104
MIAMI, FLORIDA 33186

T. (305) 278-7776
F. (305) 278-7473
WWW.BELLONMILANES.COM
AA-26002616

ARCHITECTURE
LAND PLANNING
INTERIORS
CONSTRUCTION MANAGEMENT

CONSULTANTS

A CUSTOM RESIDENCE FOR:

Mr. AND MRS. R. SANCHEZ / NOLAN RODRIGUEZ
13940 OLD CUTTLER ROAD
PALMETTO BAY, FLORIDA

MARK	DATE	DESCRIPTION
1	1-22-16	B.D.C.

PROJECT No.
DRAWN BY:
CHECKED BY:
DATE:

LEOPOLDO BELLON, AIA (AR-6737)

SHEET TITLE

S-2

SHEET OF

JOSE LUIS GUZMAN LICENSE No. 56138 STATE OF FLORIDA PROFESSIONAL ENGINEER

JOSE L GUZMAN P.E.
4869 SW 75TH AVENUE
MIAMI, FLORIDA 33155
PE0005613B
Phone: 786-338 1082
FAX: 305-260 0364
EMAIL: JGUZMANALBA@AOL.COM

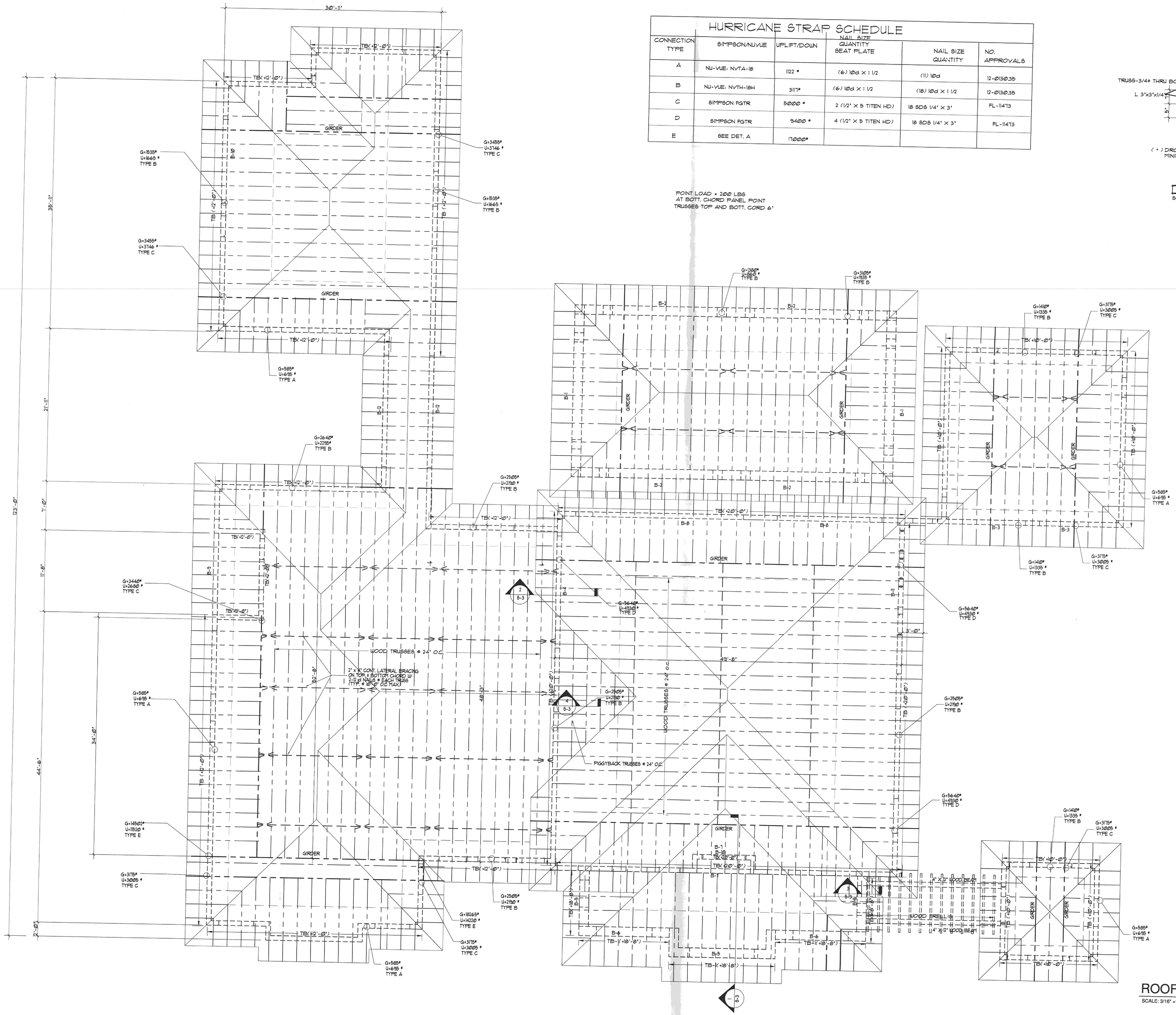

HURRICANE STRAP SCHEDULE

CONNECTION TYPE	SIMPSON/NUVUE	UPLIFT/DOWN	NAIL SIZE QUANTITY SEAT PLATE	NAIL SIZE QUANTITY	NO. APPROVALS
A	NU-VUE: NVTA-18	1122 #	(6) 10d X 1 1/2	(11) 10d	12-013035
B	NU-VUE: NVTH-18H	3117#	(6) 10d X 1 1/2	(18) 10d X 1 1/2	12-013035
C	SIMPSON FGTR	5000 #	2 (1/2" X 5 TITEN HD)	18 SDS 1/4" X 3"	FL-11473
D	SIMPSON FGTR	9400 #	4 (1/2" X 5 TITEN HD)	18 SDS 1/4" X 3"	FL-11473
E	SEE DET. A	17000#			

POINT LOAD = 200 LBS
AT BOTT. CHORD PANEL POINT
TRUSSES TOP AND BOTT. CORD 6'

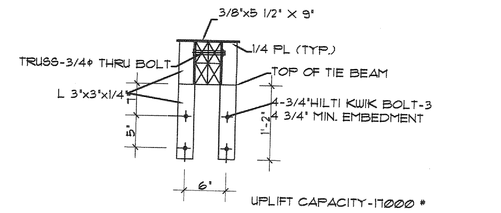

(*) DROP TIE BEAM TO 24" DEEP AND ADD 2 # B1 BOTTOM MINIMUM 24" EACH SIDE OF CONNECTOR

DETAIL A

SCALE: 3/4" = 1'-0"

ROOF FRAMIG PLAN

SCALE: 3/16" =1'-0"

BELLON architecture

13131 S.W. 132 STREET
SUITE 104
MIAMI, FLORIDA 33186

T. (305) 278-7776
F. (305) 278-7473
WWW.BELLONWILANES.COM
AA-26002616

ARCHITECTURE
LAND PLANNING
INTERIORS
CONSTRUCTION MANAGEMENT

CONSULTANTS

A CUSTOM RESIDENCE FOR:

Mr. AND MRS. R. SANCHEZ / NOLAN RODRIGUEZ
13940 OLD CUTTLER ROAD
PALMETTO BAY, FLORIDA

MARK	DATE	DESCRIPTION

PROJECT No.
DRAWN BY:
CHECKED BY:
DATE:

LEOPOLDO BELLON, AIA (AR-5737)

SHEET TITLE

S-2

SHEET OF

JOSE L. GUZMAN P.E.
4869 SW 75TH AVENUE
MIAMI, FLORIDA 33155
PE0056138
Phone: 786-338 1082
FAX: 305-260 0364
EMAIL: JGUZMANALBA@AOL.COM

JOSE LUIS GUZMAN LICENSE No. 56138 STATE OF FLORIDA PROFESSIONAL ENGINEER

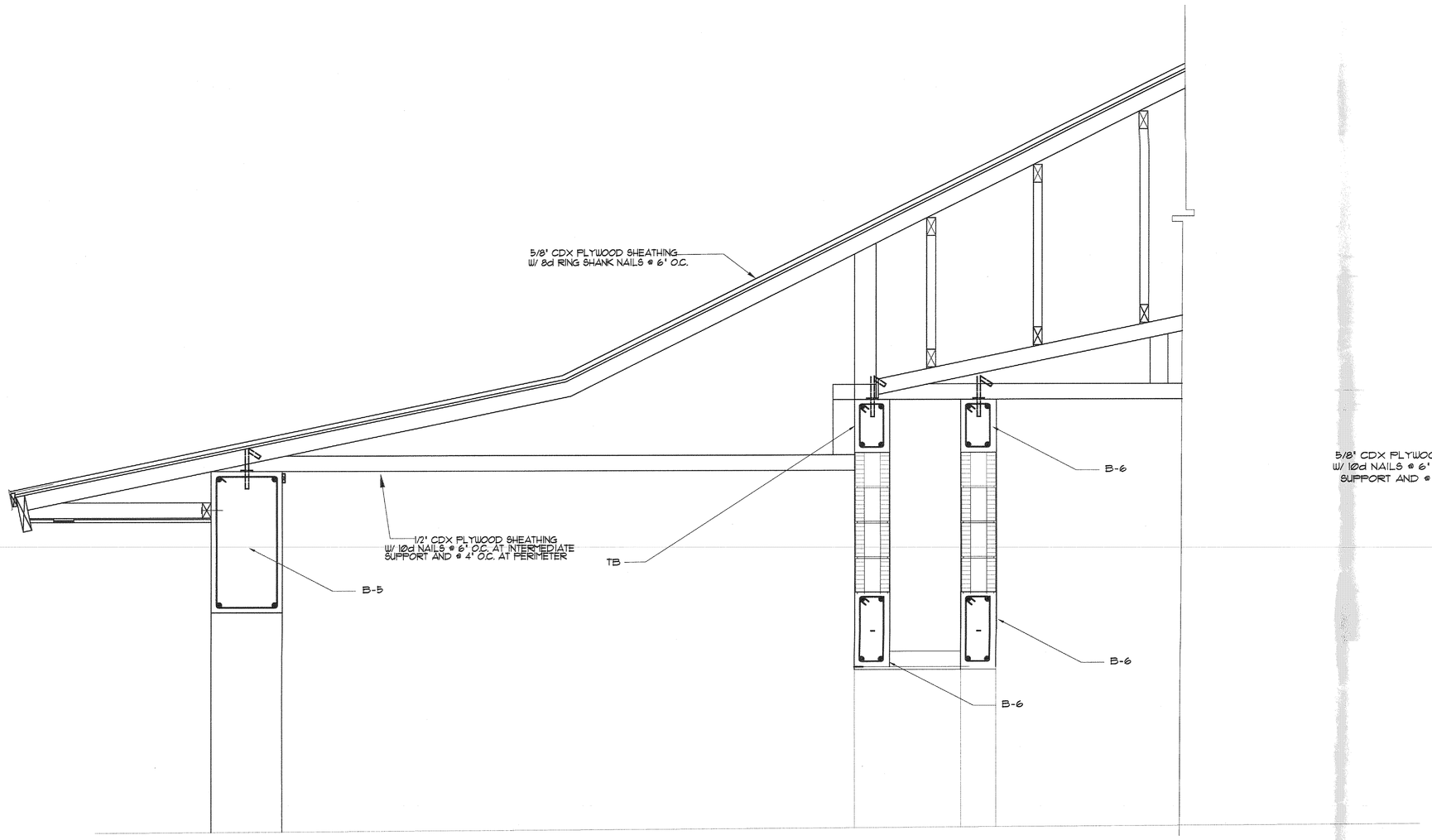

1 / S-3 SECTION
SCALE: 3/4"= 1'-0"

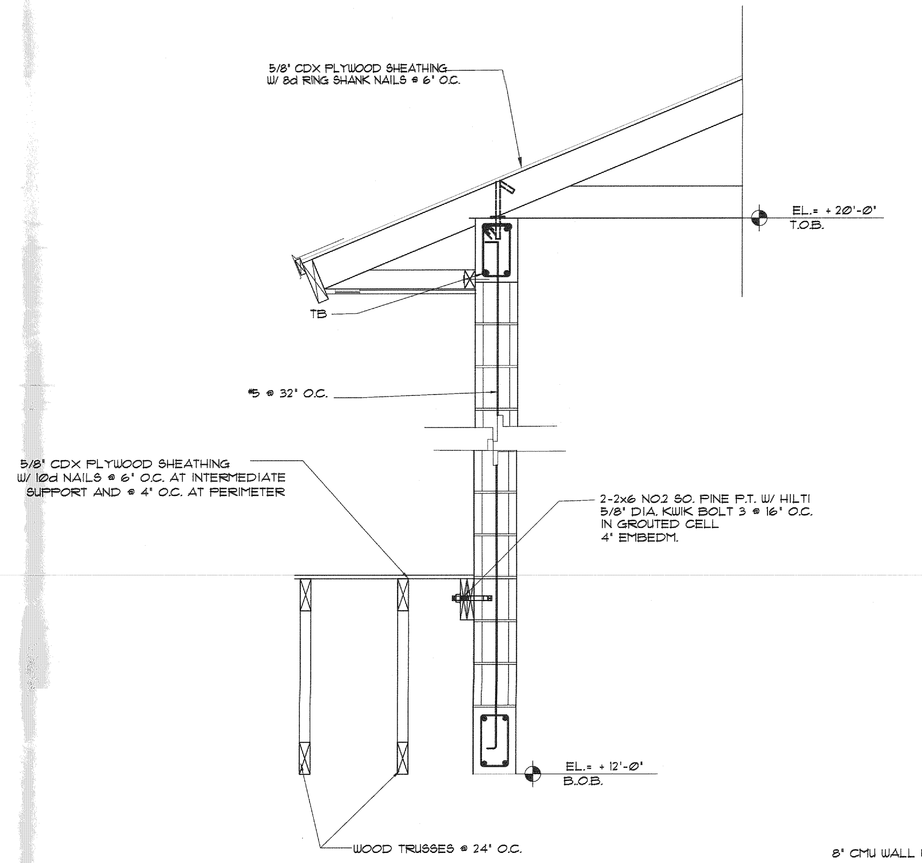

2 / S-3 SECTION
SCALE: 3/4"= 1'-0"

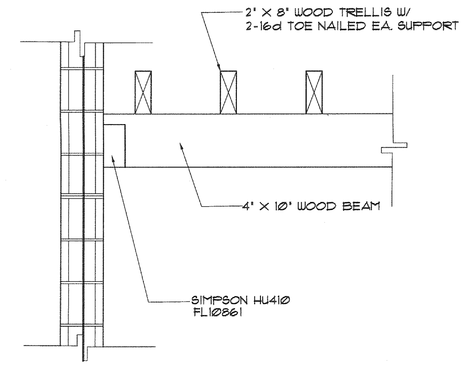

3 / S-3 SECTION
SCALE: 3/4"= 1'-0"

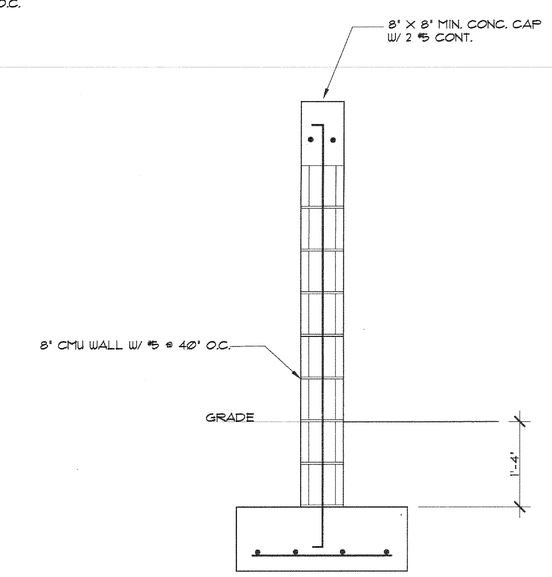

5 / S-3 SECTION
SCALE: 3/4"=1'-0"

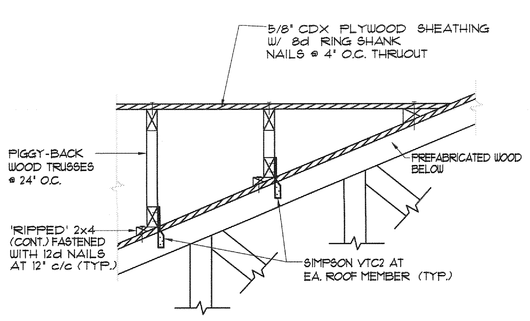

4 / S-3 SECTION
SCALE: 3/4"= 1'-0"

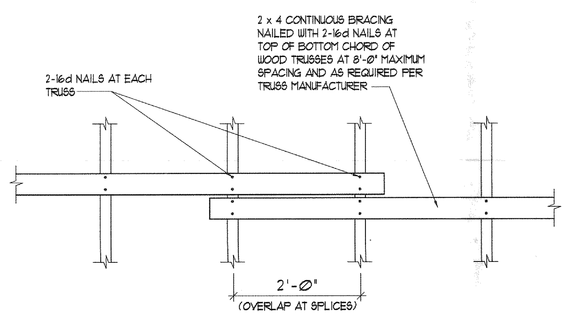

BRACING SPLICE DETAIL

SCALE: 3/4" = 1'-0"

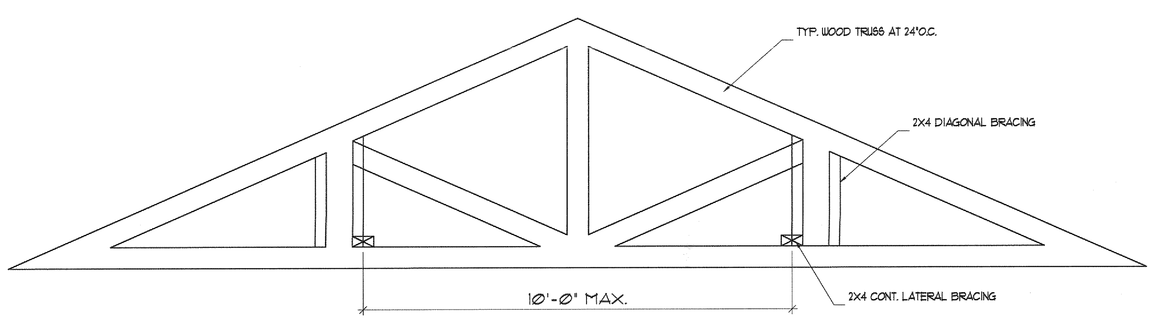

WOOD TRUSS PERMANENT BRACING DETAIL

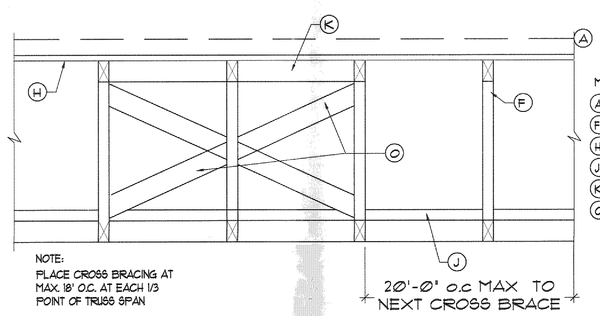

MARK - DESCRIPTION
- (A) RIDGE LINE
- (F) INTERIOR STANDARD TRUSS
- (H) ROOF SHEATHING
- (J)
- (K) 2"x4" TRUSS BLOCKING
- (G) SINGLE 2"x4" CROSS BRACING
- CONTINUOUS 2"x4" LATERAL BRACING

TRUSS BRACING DETAIL

SCALE: 3/4"= 1'-0"

BELLÓN architecture

13131 S.W. 132 STREET
SUITE 104
MIAMI, FLORIDA 33186

T. (305) 278-7776
F. (305) 278-7473
WWW.BELLONMIAMI.COM
AA-26002616

ARCHITECTURE
LAND PLANNING
INTERIORS
CONSTRUCTION MANAGEMENT

CONSULTANTS

A CUSTOM RESIDENCE FOR:

Mr. AND MRS. R. SANCHEZ / NOLAN RODRIGUEZ

13940 OLD CUTLER ROAD
PALMETTO BAY, FLORIDA

MARK	DATE	DESCRIPTION

PROJECT No.
DRAWN BY:
CHECKED BY:
DATE:

LEOPOLDO BELLON, AIA (AR-8737)

SHEET TITLE

S-3

SHEET OF

JOSE L. GUZMAN P.E.
4869 SW 75TH AVENUE
MIAMI, FLORIDA 33155
PE00056138
Phone: 786-338 1082
FAX: 305-260 0364
EMAIL: JGUZMANALBA@AOL.COM

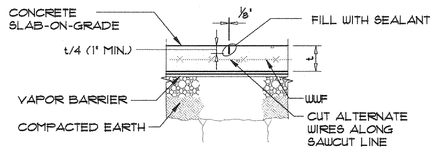

NOTE: SAWED JOINT SHALL BE SAWCUT WITHIN 12 HOURS OF CONCRETE PLACEMENT OR AS SOON AS CUTTING CAN BE DONE SUCH THAT THE BLADE DOES NOT DISLODGE AGGREGATE AND THE EDGES OF THE CUT DO NOT RAVEL. MAX. AREA SHALL BE 256 SQ. FT. UNLESS OTHERWISE NOTED.

THRU SAWCUT JOINT

SCALE: N.T.S.

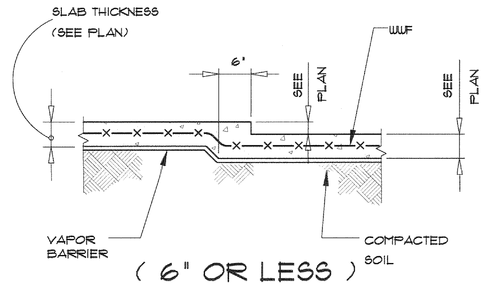

(6" OR LESS)

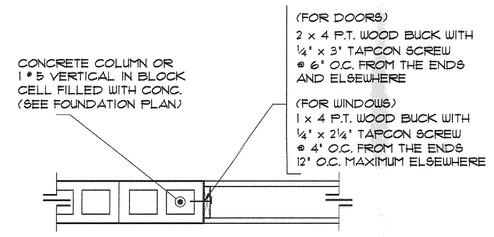

DOOR AND WINDOW BUCK DETAIL

SCALE : 3/4" = 1'-0"

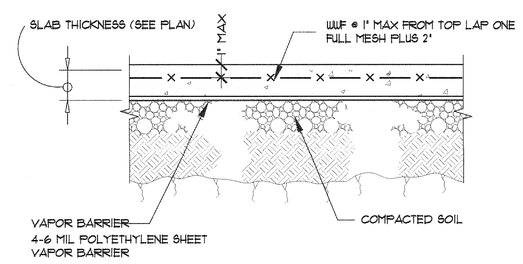

TYP. SLAB ON GROUND DETAIL

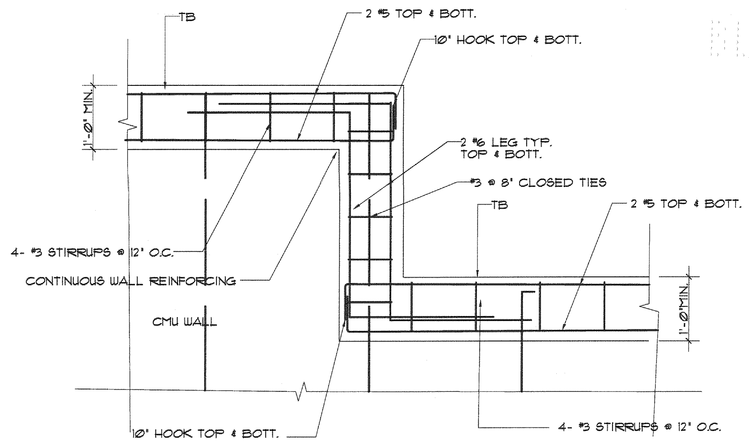

TYPICAL DETAIL AT TIE BEAM ELEVATION CHANGE

SCALE: 3/4"=1'-0"

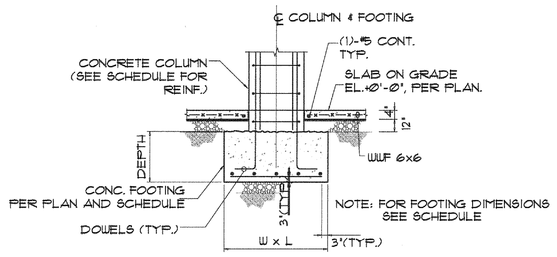

TYP. COLUMN FOOTING DETAIL

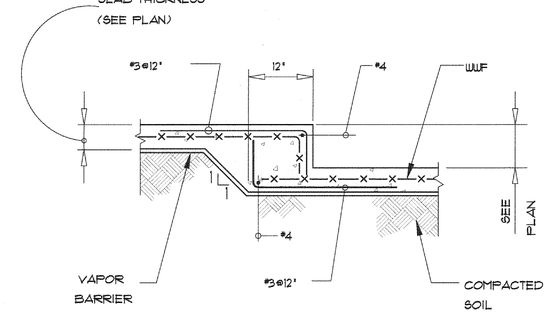

(MORE THAN 6" BUT LESS THAN 12")

TYP. SLAB DROP DETAILS

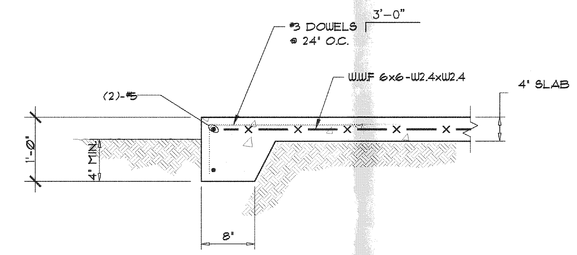

TYP. THICKENED SLAB EDGE DETAIL

SCALE: N.T.S.

SCALE:1/4"= 1'-0"

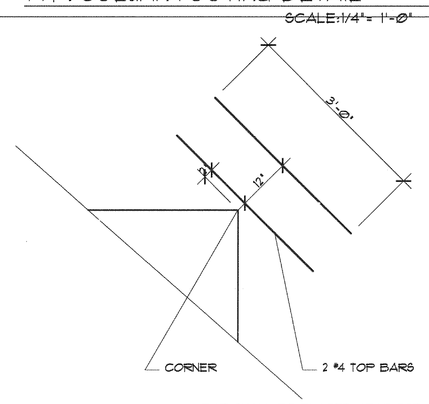

BAR SHALL BE PLACED AT 1/3 TOP OF SLAB

TYP. REENTRANT CORNER BAR DETAIL

SCALE: 3/4"= 1'-0"

#3 NOSING (TYP.)

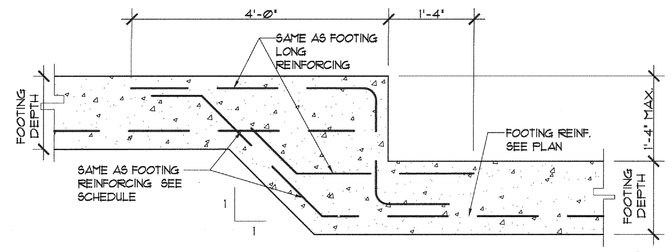

TYP. DETAIL AT STEPPED FOOTING

SCALE: 3/4"= 1'-0"

#3 NOSING (TYP.)

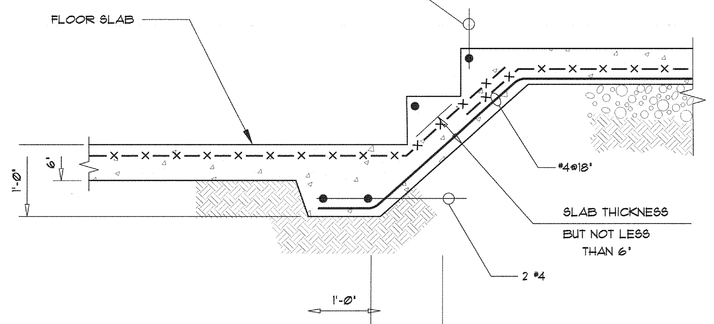

TYPICAL SLAB STEP DETAIL

N. T. S.

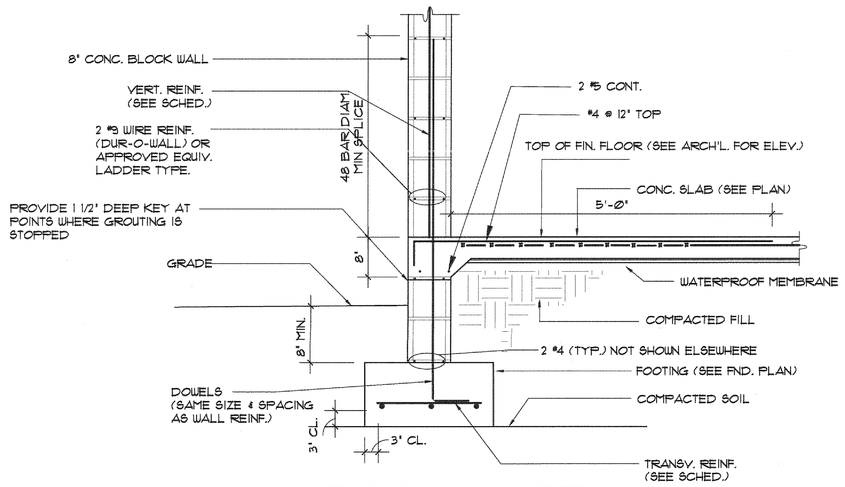

TYPICAL WALL DETAIL

SCALE: N.T.S.

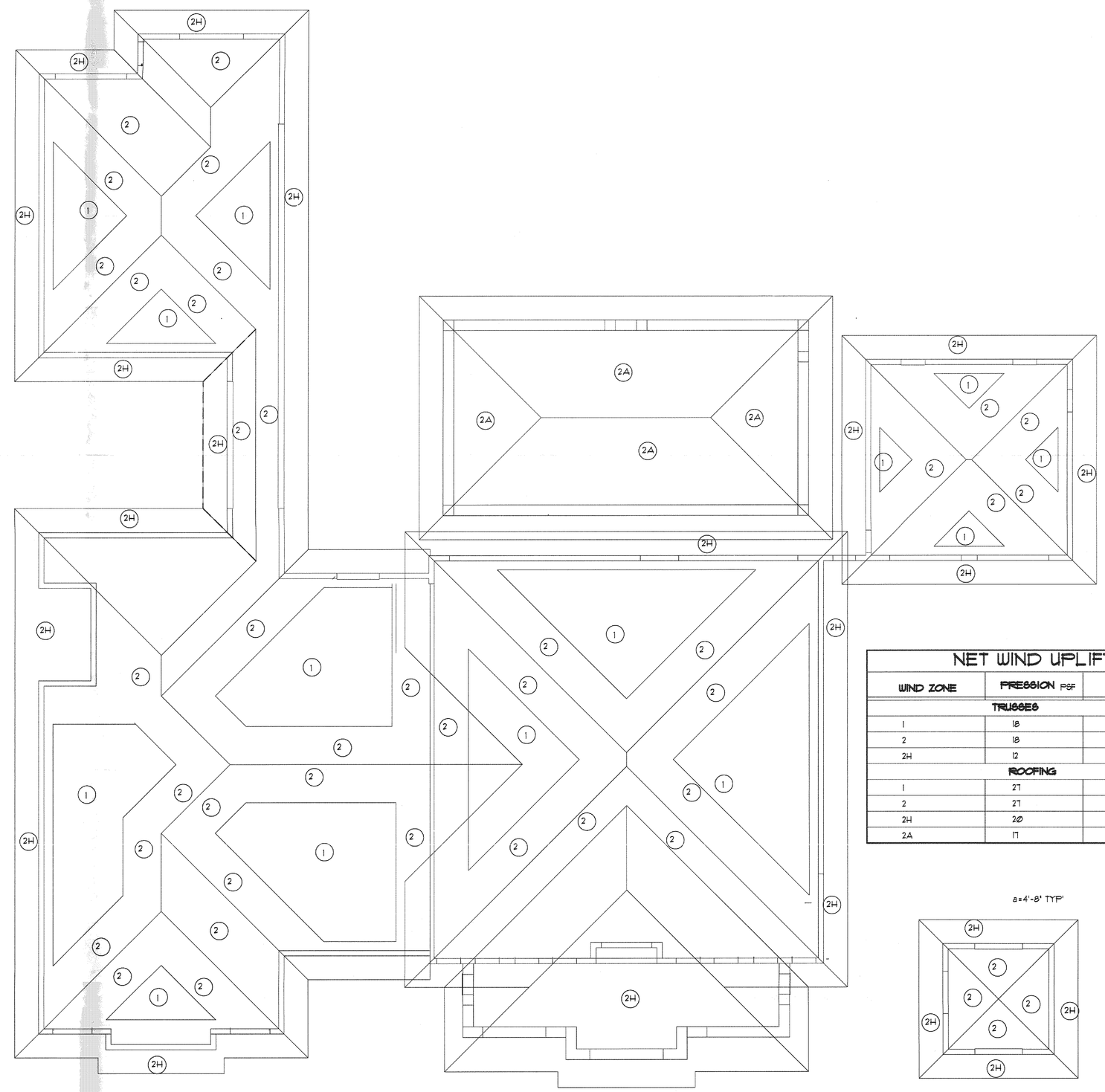

NET WIND UPLIFT

WIND ZONE	PRESSION PSF	SUCTION PSF
TRUSSES		
1	18	-27
2	18	-43
2H	12	-75
ROOFING		
1	27	-42
2	27	-71
2H	20	-85
2A	17	-27

BELLON architecture
13131 S.W. 132 STREET
SUITE 104
MIAMI, FLORIDA 33186
T. (305) 278-7776
F. (305) 278-7473
WWW.BELLONWILANES.COM
AA-26002616
ARCHITECTURE
LAND PLANNING
INTERIORS
CONSTRUCTION MANAGEMENT

CONSULTANTS

A CUSTOM RESIDENCE FOR:

Mr. AND MRS. R. SANCHEZ / NOLAN RODRIGUEZ

13940 OLD CUTTLER ROAD
PALMETTO BAY, FLORIDA

MARK	DATE	DESCRIPTION

PROJECT No.
DRAWN BY:
CHECKED BY:
DATE:

LEOPOLDO BELLON, AIA (AR-6737)

SHEET TITLE

S-4

SHEET OF

JOSE L GUZMAN P.E.
4869 SW 75TH AVENUE
MIAMI, FLORIDA 33155
PE00056138
Phone: 786-338 1082
FAX: 305-260 0364
EMAIL: JGUZMANALBA@AOL.COM

STATE OF FLORIDA
JOSE LUIS GUZMAN
No. 56138
PROFESSIONAL ENGINEER
1/26/23

STRUCTURAL NOTES:

COORDINATION:
-COORDINATE ALL DIMENSIONS, ELEVATIONS & OPENINGS WITH ARCHITECTURAL DRAWINGS. REPORT ANY DISCREPANCIES TO OUR OFFICE.

CONCRETE:
-COMPRESSIVE STRENGTH AT 28 DAYS:
SLAB ON FILL: ..... 3000 PSI
ALL OTHER POURED-IN-PLACE CONCRETE: ..... 4000 PSI
GROUT: ..... 3000 PSI
-TEST:
A MIN. OF 5 CONCRETE SPECIMENS SHALL BE TAKEN FROM EACH 50 CU. YD. OR PORTION THEREOF SPECIMENS SHALL BE TESTED ACCORDING TO A.S.T.M. C-39, ONE AT 3, ONE AT 7, AND 3 AT 28 DAYS.
-COVER:
CONCRETE DEPOSITED AGAINST THE GROUND: ..... 3"
FORMED CONCRETE IN CONTACT WITH THE GROUND: ..... 2"
BEAMS AND COLUMNS: ..... 1-1/2"
INTERIOR SLABS: ..... 3/4"
EXTERIOR SLABS: ..... 1-1/2"
POST-TENSIONED SLABS: ..... 1"

SLAB ON FILL: (PLACED ACCORDING TO ACI 302)
-JOINTS:
ISOLATION JOINTS MUST BE USED AT JUNCTIONS WITH WALLS AND COLUMNS, USE 1/2" THICK PREMOLDED JOINTS FULL DEPTH OF SLAB.
CONTROL JOINTS PLACED AT CENTERLINE OF COLUMN LINES PROVIDE INTERMEDIATE JOINTS IF COLUMN SPACING IS GREATER THEN 30' IN SIDEWALKS PROVIDE TOOLED JOINTS SPACED AT INTERVALS EQUAL TO THE WIDTH OF THE SLAB.
4" & 5" SLABS: ..... 1" DEEP TOOLED
JOINTS MUST BE SAWED BEFORE 24 HOURS AFTER CONCRETING.
CONSTRUCTION JOINTS MUST BE PLACED IN THE SLAB WHERE BUILDING EXPANSION JOINTS ARE SHOWN AND WHERE CONTROL JOINTS ARE SHOWN.
WHEN CONCRETING AND OPERATING ARE CONCLUDED FOR THE DAY, CONSTRUCTION JOINTS SHALL BE FORMED WITH BURKE KEYED KOLD METAL JOINT FORM OR APPROVED EQUAL.
-VAPOR BARRIERS:
WATERPROOF MEMBRANES (OVERLAPPED 6" AT JOINTS) WITH A PERMEANCE OF LESS THAN 0.3% PERMS IN ACCORDANCE WITH A.S.T.M. E-96 SHALL BE PROVIDED UNDER INTERIOR SLAB.
WHERE NO VAPOR BARRIER IS USED THE SUBGRADE MUST BE DAMPENED WITH WATER IN ADVANCE OF CONCRETING NO FREE WATER STANDING ON THE SUBGRADE NOR ANY MUDDY OR SOFT SPOT IS PERMITTED.
-ANY STRUCTURAL MEMBER PENETRATING SLAB ON FILL IS TO BE 1/2" PRE-MOLDED JOINT FILLER COMPLYING WITH A.S.T.M. D-1752, TYPE I.
-FINISHING:
NO PREMATURE FINISHING SHALL BE ALLOWED. IMMEDIATE FOLLOWING FLOATING TROWELING WITH STEEL TROWELS SHOULD BE COMMENCED IF REQUIRED BROOMING SHALL BE AFTER THE STEEL TROWELING OPERATION.
-SLAB FINISHES: (UNLESS OTHERWISE NOTED BY THE ARCHITECT)
BUILDING: ..... STEEL TROWELED
OUTSIDE SLAB: ..... BROOMED

REINFORCING STEEL:
-REINFORCING BARS CONFORMING TO A.S.T.M. A-615 GRADE 60, INCLUDING COLUMN AND BEAM TIES.
-WELDED FIRE FABRIC CONFORMING TO A.S.T.M. A-185 AND SUPPORTED ON SLAB BOLSTERS SPACED AT 3'-0" O/C.
-FABRICATION AND DETAILING ACCORDING TO A.C.I.-315.
-ALL ACCESSORIES TO HAVE UPTURNED LEGS AND BE PLASTIC DIPPED AFTER FABRICATION.

WELDING:
-ALL WELDING SHOULD BE PERFORMED IN ACCORDANCE WITH THE REQUIREMENTS SET FORTH BY AWS. BY CERTIFIED WELDERS.
-CONTRACTORS TO USE E-70 SERIES LOW HYDROGEN ELECTRODES.

DESIGN CRITERIA:

SUPERIMPOSED LOADS	LIVE LOAD:	DEAD LOAD:
-ROOF:	30 PSF	25 PSF
-FLOOR:	40 PSF	25 PSF
BALCONY	60 PSF	25 PSF

WIND LOAD: V=175 MPH EXP. C, I=1, KD=1

OWNER, ARCHITECT, AND CONTRACTOR NOTE:
-CHECK FOR SHOP DRAWINGS AND INSPECTIONS OF REINFORCEMENT IN THE FIELD ARE REQUIRED IF THIS OFFICE IS TO BE HELD RESPONSIBLE FOR THE STRUCTURAL ADEQUACY OF THE CONSTRUCTED BUILDING.

SHORING, RE-SHORING, AND TEMPORARY BRACING:
-ALL SHORING, RE-SHORING AND TEMPORARY BRACING REQUIRED IN THIS PROJECT IS TO BE DESIGNED BY FLORIDA RESTRICTED ENGINEER WHO SPECIALIZES IN FORM WORK/TEMPORARY BRACING DESIGN, AND WHO HAS BEEN HIRED BY THE GENERAL CONTRACTOR. THE GENERAL CONTRACTOR IS THE ULTIMATE RESPONSIBLE PARTY FOR SHORING, RE-SHORING AND TEMPORARY BRACING REQUIRED ON THIS PROJECT AND MUST SATISFY HIMSELF WITH THE ADEQUACY OF THE INSTALLATION OF THESE ITEMS AT ALL TIMES. IN THE SPECIFIC CASE OF POURED SLABS IT IS HIGHLY RECOMMENDED THAT FROM THE SHORING DESIGNER OR HIS AGENT PRIOR TO THE PLACEMENT OF CONCRETE THE GENERAL CONTRACTOR SECURE A CERTIFICATION OF THE INSTALLED SHORING.

SAFETY OSHA AND LABOR LAWS:
-THE STRUCTURAL ENGINEER OF RECORD DOES NOT POSSESS, NOR PRESUMES TO POSSESS ANY KNOWLEDGE OR EXPERTISE IN MATTERS TO JOB SITE EMPLOYEE SAFETY, OSHA OR LABOR LAE REQUIREMENTS FOR A CONSTRUCTION PROJECT. SAFETY AND COMPLIANCE WITH OSHA AND LABOR LAWS ARE THE ABSOLUTE RESPONSIBILITY OF THE GENERAL CONTRACTOR AND THOSE CONSULTANTS HE HIRES TO ADDRESS THESE MATTERS. THE STRUCTURAL ENGINEER OF RECORD SPECIALIZES IN STRUCTURAL DESIGN ONLY, AND THE BOARD OF PROFESSIONAL REGULATION FORBIDS HIM FROM ASSUMING RESPONSIBILITY OUTSIDE HIS AREA OF EXPERTISE

APPLICABLE CODES:
-ALTHOUGH THE ENGINEER OF RECORD HAS STRIVED TO MEET ALL APPLICABLE CODES AND LOCAL ORDINANCE REQUIREMENTS, THE CONTRACTOR IS STILL RESPONSIBLE FOR COMPLYING WITH ALL APPLICABLE CODES AND ORDINANCES OF THE EVENT OF CONFLICT OR OVERSIGHT IN THE DRAWINGS THE CONTRACTOR MUST IMMEDIATELY NOTIFY THE ARCHITECT OR ENGINEER OF ANY CONFLICT OF DISCREPANCY ENCOUNTERED SO THAT APPROPRIATE REMEDIES MAY BE UNDERTAKEN.
-THE APPLICABLE CODES ARE:
⚠ FLORIDA BUILDING CODE 2014
A.C.I. 318 -08 BUILDING CODE REQUIREMENTS FOR REINFORCED CONCRETE.
A.I.S.C. MANUAL OF STEEL CONSTRUCTION, 9th. EDITION.
ASCE 7-2010

SHOP DRAWING SUBMITTALS:
-SUBMIT ONE SEPIA AND ONE PRINT OF ALL SHOP DRAWINGS LISTED BELOW IF SIGNED AND SEALED SHOP DRAWINGS ARE REQUIRED, THEN SUBMIT TWO ADDITIONAL SIGNED AND SEALED PRINTS FOR APPROVAL.
-SHOP DRAWINGS:
REINFORCED STEEL.
STRUCTURAL STEEL.
CONCRETE MIX DESIGN.

TIMBER:
- ALL ROOF MEMBERS TO BE SECURED TO TIE BEAM OR OTHER STRUCTURAL ELEMENT WITH HURRICANE ANCHORS.
- TRUSS MANUFACTURER TO SUBMIT SHOP DRAWINGS SIGNED AND SEALED BY HIS REGISTERED ENGINEER BEFORE SUBMITTING FOR APPROVAL.

MASONRY NOTES: (TYPICAL FOR ALL LEVELS)

1. ALL BLOCK WALLS SHALL BE TWO CELL HOLLOW CONCRETE MANSORY BLOCK MANUFACTURED IN CONFORMANCE WITH ASTM C-90 AND PROJECT SPECS. THESE MASONRY UNITS SHALL PROVIDE A MINIMUM PRISM STRENGTH F'm= 1500 PSI IN 28 DAYS AS DELIVERED TO THE JOB SITE. MANUFACTURER SHALL SUBMIT PRISM TEST RESULTS FOR ALL MASONRY USED ON THE PROJECT PRIOR TO CONSTRUCTION. THREE PRISMS SHALL BE MADE FOR EACH TEST OF 5000 SQ. FT. OF WALL. PRISMS SHALL BE TWO BLOCK HIGH, USING TYPE M MORTAR ON FACE SHELL ONLY AND MADE TESTED IN CONFORMANCE WITH A.S.T.M. C 140-98. TOGETHER WITH A.S.T.M. E 447, METHOD B AS MODIFIED IN
⚠ ACI 530.1 -08. MASONRY UNIT STRENGTH = 1900 PSI
2. ALL GROUTING SHALL COMPLY WITH ASTM C-476 WITH A MINIMUM COMPRESSIVE STRENGTH OF 3000 PSI IN 28 DAYS. MIX SHALL HAVE 3/8" MAX. SIZE AGGREGATE WITH A MINIMUM SLUMP OF 8". GROUT SHALL BE SAMPLED AND TESTED AS PER ASTM C-39, WITH A MIN. OF 3 TESTS PER 30 YD. OR LESS BEING PLACED EACH DAY.
3. TYPE M MORTAR SHALL BE USED EXCLUSIVELY ON THIS PROJECT AND PROPORTIONED AS OUTLINED UNDER ASTM C-270. HOLLOW UNITS SHALL BE LAID WITH FULL MORTAR COVERAGE ON HORIZONTAL AND VERTICAL FACE SHELLS EXCEPT THAT WEBS SHALL ALSO BE BEDDED IN ALL COURSES OF COLUMNS, IN THE STARTING COURSE ON FOOTINGS AND SOLID FOUNDATION WALLS, AND AT GROUTED CELLS. HORIZONTAL AND VERTICAL FACE JOINTS SHALL BE 3/8" THICK U.O.N. VERTICAL JOINTS SHALL BE SHOVED TIGHT. MORTAR PROTRUSIONS EXTENDING INTO CELLS OR CAVITIES (THAT ARE TO BE REINFORCED AND GROUTED) SHALL BE REMOVED. ALLOW MIN. 24 HOURS FOR MORTAR TO CURE PRIOR TO GROUTING.
4. STANDARD HIGH-LIFT GROUTING PROCEDURES SHALL BE FOLLOWED. LAY UP BLOCK AS REQUIRED. DROP VERTICAL STEEL INTO CELLS CONTAINING DOWELS AND SECURE IN PLACE. PROVIDE CUTOUT ON FACE FOR CLEAN OUT, STEEL TYING AND INSPECTING, AND GROUT FLOW VERIFICATION. GROUTING SHALL BE DONE IN MAX OF 4'-0" LIFTS, CONTINUING AROUND BUILDING AND RETURNING TO THE STARTING POINT WITH APPROXIMATELY ONE HOUR DELAY PRIOR TO COMMENCING WITH NEXT 4'-0" GROUT LIFT. GROUTING SHALL BE CONTINUOUS UNTIL COMPLETION. THE LEVEL OF GROUT SHALL BE STOPPED 1-1/2" FROM TOP OF THE LAST MASONRY UNIT. WHERE BREAK AWAY OR BREAK OUT IS CALLED FOR OR REQUIRED, A SAW CUT SHALL BE USED. FOLLOW ABOVE PROCEDURE TO ROOF LEVEL.
5. ALL WALLS SHALL BE REINFORCED AND GROUTED VERTICAL AND HORIZONTAL CONTINUOUS AS SHOWN ON DRAWINGS. ALL WALL OPENINGS SHALL HAVE A MIN. OF 2 # 5 VERTICAL EA. SIDE AND 2 # 5 TOP AND BOTTOM U.O.N. ON PLANS AND SCHEDULES). ALL SPLICING IN REINFORCING BARS SHALL BE A MIN. LAP OF 6 X BAR NUMBER. MASONRY CONTRACTOR SHALL PROVIDE "LADUR" TYPE "DUR-O-WALL" HORIZONTAL REINFORCING AT ALTERNATE COURSE 16" O/C U.O.N. DUR-O-WALL SHALL BE CONTINUOUS WITH A MIN. SPLICE OF 6". PROVIDE PREFAB TEES AND CORNER SECTION AS REQUIRED. ALL LINTEL REINFORCING BARS SHALL EXTEND NOT LESS THAN 24" BEYOND EA. SIDE OF ALL OPENINGS.
6. MASONRY CONTRACTOR SHALL LAY BLOCK UNITS SO AS TO ASSURE TIGHT HEAD JOINTS AND SNUG BED JOINTS FOR SHRINKAGE CONTROL AND WATER TIGHTNESS. MORTAR JOINTS SHALL BE TOOLED WHEN THUMB PRINT HARD TO INCREASE WATER TIGHTNESS. ALL ADJUSTMENTS TO BLOCKS NOTED ON PLANS SHALL BE SAW CUT. WHERE BREAK AWAY OR BREAK OUT IS CALLED FOR, A SAW CUT SHALL BE USED.
7. CONTRACTOR SHALL RETAIN THE SERVICES OF AN INDEPENDENT TESTING LAB TO PROVIDE TESTING IN CONFORMANCE TO PLANS AND SPECIFICATIONS. ALL TESTING SHALL BE PAID BY THE OWNER.
8. ALL MASONRY DESIGN AND CONSTRUCTION SHALL COMPLY WITH ACI 530-92 AND ACI 530.1-92

- PROVIDE # 9 TRUSS TYPE (LADDER TYPE FOR REINFORCED MASONRY) HORIZONTAL MASONRY REINF. @ 16" O/C IN ALL MASONRY WALLS
- IN ALL VERTICAL REINFORCEMENT PROVIDE FOUNDATION DOWELS AND STANDARD HOOKS AT TOP TIE BEAM.
- SPLICE VERTICAL MASONRY WALL REINFORCEMENT 48 BAR DIAMETERS AS FOLLOWS:
FOR # 5 BARS: 30"
FOR # 6 BARS: 36"
FOR # 7 BARS: 42"

STRUCTURAL STEEL:
-ALL STRUCTURAL STEEL PLATES SHALL CONFORM TO A.S.T.M. A-36 HOT DIPPED GALVANIZED.
-PLATES SHALL BE TOUCHED AFTER WELDING HAS TAKEN PLACE.
-ALL STRUCTURAL STEEL WELDING SHALL BE PERFORM WITH AWS. D.1.1.
-ALL ANCHOR BOLTS SHALL CONFORM TO A.S.T.M. A-307.
-ALL BOLTS SHALL CONFORM TO A.S.T.M. A-325.
- ALL STRUCTURAL TUBING SHALL BE CONCRETE FILLED AND CONFORM TO A. S. T. M. A-500, PROVIDE 1/4" DIA. PRESSURE RELIEF HOLES IN EACH COLUMN, AT TOP, BOTTOM AND MID-POINT. (Fy= 46 K. S. I.)
-PROVIDE ONE SHOP COAT OR RUST INHIBITING PAINT MIN. 3 ML. DRY FILM THICKNESS).
-FABRICATIONS AND ERECTIONS SHALL BE DONE IN ACCORDANCE WITH THE LATEST A.I.S.C. SPECIFICATIONS.

STRUCTURAL WOOD:
- ALL LUMBER FOR JOISTS, RAFTERS, BEAMS AND BEARING STUDS & EXTERIOR WALLS SHALL BE SOUTHERN PINE NO.2 AND SHALL HAVE A MINIMUM EXTREME FIBER STRESS IN BENDING OF Fb = 1200 PSI. (E=1760000 P.S.I.)
- ALL LUMBER THAT IS USED AS STRUCTURAL MEMBERS OR SHEATHING SHALL BE PRESSURE TREATED AGAIST ATTACK BY TERMITES AND DAMPNESS
- ALL WOOD CONNECTORS AND ACCESORIES SHALL BE GALVANIZED
- ALL LUMBER SHALL BE SOUTHERN PINE No. 2
- WOOD FOR TRELLIS SHALL BE NORTHERN CEDAR NO.2 AND SHALL HAVE A MINIMUM EXTREME FIBER STRESS IN BENDING OF Fb = 550 PSI.

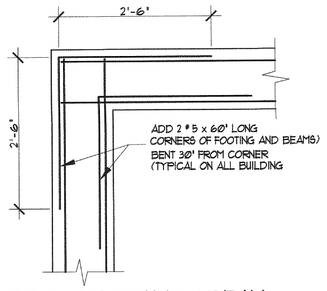

CORNER FOOTING / BEAM BAR DETAIL

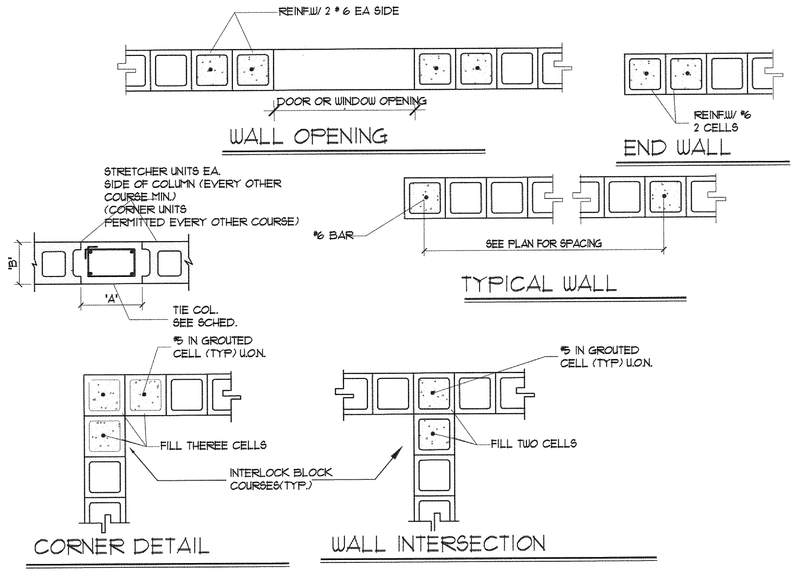

CONCRETE COLUMN SCHEDULE

MARK	SIZE	VERT. REINF.	TIES	REMARKS
TC	8" x 12"	4 #5	#3 @ 8"	DET A
TC-1	8" x 16"	6 #6	#3 @ 8"	DET B
TC-2	8" x 21"	6 #5	#3 @ 8"	DET B
TC-3	8" x 19"	4 #6	#3 @ 8"	DET A
TC-4	8" x 30"	6 #6	#3 @ 8"	DET B
TC-5	8" x 16"	6 #5	#3 @ 8"	DET B
TC-6	SEE DET.	10 #6	#3 @ 8"	
1	16" x 16"	4 #5	#3 @ 8"	CMU COL.
2	8"X12"	4 #5	#3 @ 8"	DET A
3	8" x 22"	6 #5	#3 @ 8"	DET B
4	8" X 24"	6 #6	#3 @ 8"	DET B
5	8" x 21"	6 #5	#3 @ 8"	DET A

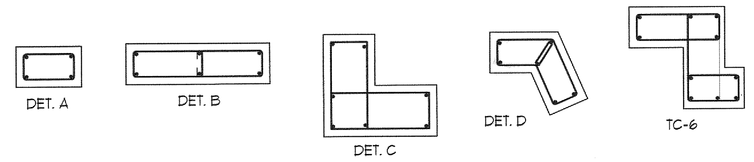

BEAM SCHEDULE

MARK	ELEV.	SIZE B x D	BOTT. No.	BOTT. SIZE	TOP CONT. No.	TOP CONT. SIZE	"C" BARS No.	"C" BARS SIZE	"E" BARS No.	"E" BARS SIZE	STIRRUPS No.	STIRRUPS SIZE	STIRRUPS SPACING EACH END	REMARKS
B-1	+15'-4"	16" x 45"	3	#8	2	#6					#3	@ 12" O.C.		CANT BEAM
B-2	+15'-4"	16" x 45"	3	#8	3	#8					#3	@ 12" O.C.		
B-3	+10'-0"	8" x 36"	2	#6	2	#6					#3	@ 12" O.C.		
B-4	+14'-0"	8" x 24"	2	#8	2	#5					#3	@ 10" O.C.		
B-5	+10'-8"	16" x 26"	3	#6	3	#6					#3	@ 10" O.C.		
B-6	+12'-6"	16" x 16"	3	#6	2	#5					#3	@ 10" O.C.		
B-7	+16'-0"	8" x 16"	2	#6	2	#5					#3	@ 8" O.C.		
B-8	+10'-0"	8" x 24"	2	#8	2	#8					#3	@ 10" O.C.		
B-9	+12'-0"	8" x 12"	2	#6	2	#5					#3	@ 6" O.C.		
B-10	+10'-0"	8" x 24"	2	#6	2	#6					#3	@ 10" O.C.		
B-11	+9'-0"	8" x 12"	2	#6	2	#6					#3	@ 8" O.C.		
B-12	+12'-0"	8" x 48"	2	#7	2	#5					#3	@ 6" O.C.		
TB	SEE PLAN	8" x 12"	2	#5	2	#5					#3	@ 12" O.C.		
TB-1	SEE PLAN	16" x 12"	2	#5	2	#5					#3	@ 12" O.C.		

SEE INTERMEDIATE BEAM REINFORCING SCHEDULE THIS SHEET

FOOTING SCHEDULE

MARK	SIZE	REINF. EA. WAY BOTT.	REMARKS
F-3	3'-0" X 3'-0" X 12"	4 # 4	
F-4	4'-0" X 4'-0" X 12"	5 # 5	
F-5	5'-0" X 5'-0" X 12"	6 # 5	
F-5.5	5'-6" X 5'-6" X 14"	7 # 5	
⚠ F-6.5	6'-6" X 6'-6" X 14"	#5 @10"	top & bott.
F-7	7'-0" X 7'-0" X 16"	#6 @ 8"	top & bott.
WF-16	16" X 12"	2 #5 CONT.	
WF-18	18" X 12"	3 #5 CONT.	
WF-24	24" X 12"	3 #5 CONT.	#4 @ 16" TRANSV.

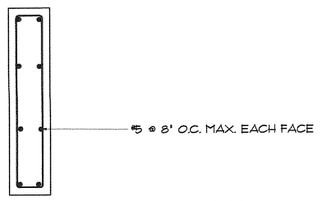

TYPICAL INTERMEDIATE REINFORCING DETAIL
N. T. S.

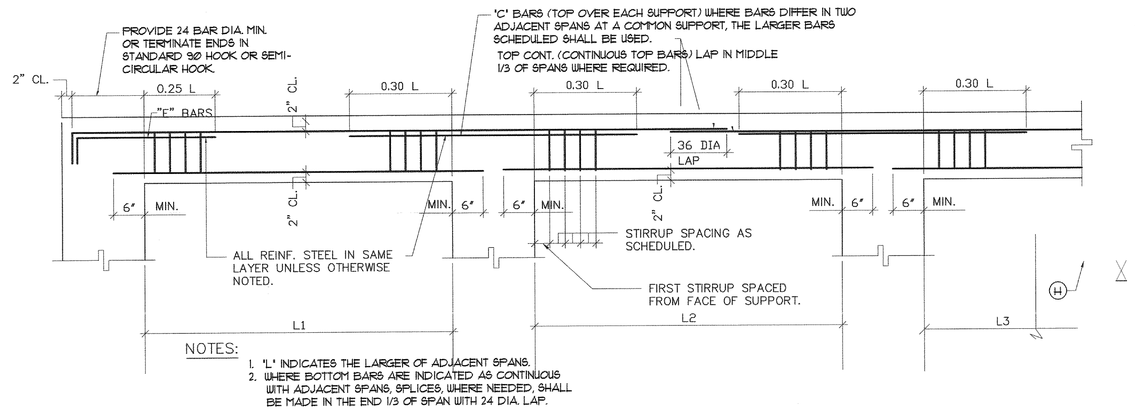

NOTES:
1. "L" INDICATES THE LARGER OF ADJACENT SPANS.
2. WHERE BOTTOM BARS ARE INDICATED AS CONTINUOUS WITH ADJACENT SPANS, SPLICES, WHERE NEEDED, SHALL BE MADE IN THE END 1/3 OF SPAN WITH 24 DIA. LAP.

TYPICAL BEAM REINF. PLACING DIAGRAM
N. T. S.

BELLÓN architecture
13131 S.W. 132 STREET
SUITE 104
MIAMI, FLORIDA 33186
T. (305) 278-7776
F. (305) 278-7473
WWW.BELLONMILANES.COM
AA-26002616
ARCHITECTURE
LAND PLANNING
INTERIORS
CONSTRUCTION MANAGEMENT
CONSULTANTS

A CUSTOM RESIDENCE FOR:
Mr. AND MRS. R. SANCHEZ / NOLAN RODRIGUEZ
13940 OLD CUTTLER ROAD
PALMETTO BAY, FLORIDA

MARK.	DATE	DESCRIPTION
1	1-22-16	B.D.C.

PROJECT No.
DRAWN BY:
CHECKED BY:
DATE:

LEOPOLDO BELLON, AIA (AR-6737)

SHEET TITLE

S-5

SHEET OF

JOSE L GUZMAN P.E.
4869 SW 75TH AVENUE
MIAMI, FLORIDA 33155
PE00056138
Phone: 786-339 1082
FAX: 305-260 0364
EMAIL: JGUZMANALBA@AOL.COM

JOSE LUIS GUZMAN LICENSE No. 56138 STATE OF FLORIDA PROFESSIONAL ENGINEER
1/22/14

STRUCTURAL NOTES:

COORDINATION:
-COORDINATE ALL DIMENSIONS, ELEVATIONS & OPENINGS WITH ARCHITECTURAL DRAWINGS. REPORT ANY DISCREPANCIES TO OUR OFFICE.

CONCRETE:
-COMPRESSIVE STRENGTH AT 28 DAYS:
SLAB ON FILL: ..... 3000 PSI
ALL OTHER POURED-IN-PLACE CONCRETE: ..... 4000 PSI
GROUT: ..... 3000 PSI
-TEST:
A MIN. OF 5 CONCRETE SPECIMENS SHALL BE TAKEN FROM EACH 50 CU. YD. OR PORTION THEREOF SPECIMENS SHALL BE TESTED ACCORDING TO A.S.T.M. C-39, ONE AT 3, ONE AT 7, AND 3 AT 28 DAYS.
-COVER:
CONCRETE DEPOSITED AGAINST THE GROUND: ..... 3"
FORMED CONCRETE IN CONTACT WITH THE GROUND: ..... 2"
BEAMS AND COLUMNS: ..... 1-1/2"
INTERIOR SLABS: ..... 3/4"
EXTERIOR SLABS: ..... 1-1/2"
POST-TENSIONED SLABS: ..... 1"

SLAB ON FILL: (PLACED ACCORDING TO ACI 302)
-JOINTS:
ISOLATION JOINTS MUST BE USED AT JUNCTIONS WITH WALLS AND COLUMNS, USE 1/2" THICK PREMOLDED JOINTS FULL DEPTH OF SLAB.
CONTROL JOINTS PLACED AT CENTERLINE OF COLUMN LINES PROVIDE INTERMEDIATE JOINTS IF COLUMN SPACING IS GREATER THEN 30' IN SIDEWALKS PROVIDE TOOLED JOINTS SPACED AT INTERVALS EQUAL TO THE WIDTH OF THE SLAB.
4" & 5" SLABS: ..... 1" DEEP TOOLED
JOINTS MUST BE SAWED BEFORE 24 HOURS AFTER CONCRETING.
CONSTRUCTION JOINTS MUST BE PLACED IN THE SLAB WHERE BUILDING EXPANSION JOINTS ARE SHOWN AND WHERE CONTROL JOINTS ARE SHOWN.
WHEN CONCRETING AND OPERATING ARE CONCLUDED FOR THE DAY, CONSTRUCTION JOINTS SHALL BE FORMED WITH BURKE KEYED KOLD METAL JOINT FORM OR APPROVED EQUAL.
-VAPOR BARRIERS:
WATERPROOF MEMBRANES (OVERLAPPED 6" AT JOINTS) WITH A PERMEANCE OF LESS THAN 0.3% PERM'S IN ACCORDANCE WITH A.S.T.M. E-96 SHALL BE PROVIDED UNDER INTERIOR SLAB. WHERE NO VAPOR BARRIER IS USED THE SUBGRADE MUST BE DAMPENED WITH WATER IN ADVANCE OF CONCRETING NO FREE WATER STANDING ON THE SUBGRADE NOR ANY MUDDY OR SOFT SPOT IS PERMITTED.
-ANY STRUCTURAL MEMBER PENETRATING SLAB ON FILL IS TO BE 1/2" PRE-MOLDED JOINT FILLER COMPLYING WITH A.S.T.M. D-1752, TYPE I.
-FINISHING:
NO PREMATURE FINISHING SHALL BE ALLOWED. IMMEDIATE FOLLOWING FLOATING TROWELING WITH STEEL TROWELS SHOULD BE COMMENCED IF REQUIRED BROOMING SHALL BE AFTER THE STEEL TROWELING OPERATION.
-SLAB FINISHES: (UNLESS OTHERWISE NOTED BY THE ARCHITECT)
BUILDING: ..... STEEL TROWELED
OUTSIDE SLAB: ..... BROOMED

REINFORCING STEEL:
-REINFORCING BARS CONFORMING TO A.S.T.M. A-615 GRADE 60, INCLUDING COLUMN AND BEAM TIES.
-WELDED WIRE FABRIC CONFORMING TO A.S.T.M. A-185 AND SUPPORTED ON SLAB BOLSTERS SPACED AT 3'-0" O/C.
-FABRICATION AND DETAILING ACCORDING TO A.C.I.-315.
-ALL ACCESSORIES TO HAVE UPTURNED LEGS AND BE PLASTIC DIPPED AFTER FABRICATION.

WELDING:
-ALL WELDING SHOULD BE PERFORMED IN ACCORDANCE WITH THE REQUIREMENTS SET FORTH BY A.W.S. BY CERTIFIED WELDERS.
-CONTRACTORS TO USE E-70 SERIES LOW HYDROGEN ELECTRODES.

DESIGN CRITERIA:

SUPERIMPOSED LOADS	LIVE LOAD:	DEAD LOAD:
-ROOF:	30 PSF	25 PSF
-FLOOR:	40 PSF	25 PSF
BALCONY	60 PSF	25 PSF

WIND LOAD: V=175 MPH EXP. C, IF=1, KD=1

OWNER, ARCHITECT, AND CONTRACTOR NOTE:
-CHECK FOR SHOP DRAWINGS AND INSPECTIONS OF REINFORCEMENT IN THE FIELD ARE REQUIRED IF THIS OFFICE IS TO BE HELD RESPONSIBLE FOR THE STRUCTURAL ADEQUACY OF THE CONSTRUCTED BUILDING.

SHORING, RE-SHORING, AND TEMPORARY BRACING:
-ALL SHORING, RE-SHORING AND TEMPORARY BRACING REQUIRED IN THIS PROJECT IS TO BE DESIGNED BY FLORIDA RESTRICTED ENGINEER WHO SPECIALIZES IN FORM WORK/TEMPORARY BRACING DESIGN AND WHO HAS BEEN HIRED BY THE GENERAL CONTRACTOR. THE GENERAL CONTRACTOR IS THE ULTIMATE RESPONSIBLE PARTY FOR SHORING, RE-SHORING, AND TEMPORARY BRACING REQUIRED ON THIS PROJECT AND MUST SATISFY HIMSELF WITH THE ADEQUACY OF THE INSTALLATION OF THESE ITEMS AT ALL TIMES. IN THE SPECIFIC CASE OF POURED SLABS IT IS HIGHLY RECOMMENDED THAT FROM THE SHORING DESIGNER OR HIS AGENT PRIOR TO THE PLACEMENT OF CONCRETE THE GENERAL CONTRACTOR SECURE A CERTIFICATION OF THE INSTALLED SHORING.

SAFETY OSHA AND LABOR LAWS:
-THE STRUCTURAL ENGINEER OF RECORD DOES NOT POSSESS, NOR PRESUMES TO POSSESS ANY KNOWLEDGE OR EXPERTISE IN MATTERS TO JOB SITE EMPLOYEE SAFETY, OSHA OR LABOR LAB REQUIREMENTS FOR A CONSTRUCTION PROJECT. SAFETY AND COMPLIANCE WITH OSHA AND LABOR LAWS ARE THE ABSOLUTE RESPONSIBILITY OF THE GENERAL CONTRACTOR AND THOSE CONSULTANTS HE HIRES TO ADDRESS THESE MATTERS. THE STRUCTURAL ENGINEER OF RECORD SPECIALIZES IN STRUCTURAL DESIGN ONLY AND THE BOARD OF PROFESSIONAL REGULATION FORBIDS HIM FROM ASSUMING RESPONSIBILITY OUTSIDE HIS AREA OF EXPERTISE

APPLICABLE CODES:
-ALTHOUGH THE ENGINEER OF RECORD HAS STRIVED TO MEET ALL APPLICABLE CODES AND LOCAL ORDINANCE REQUIREMENTS, THE CONTRACTOR IS STILL RESPONSIBLE FOR COMPLYING WITH ALL APPLICABLE CODES AND ORDINANCES OF THE EVENT OF CONFLICT OR OVERSIGHT IN THE DRAWINGS THE CONTRACTOR MUST IMMEDIATELY NOTIFY THE ARCHITECT OR ENGINEER OF ANY CONFLICT OF DISCREPANCY ENCOUNTERED SO THAT APPROPRIATE REMEDIES MAY BE UNDERTAKEN.
-THE APPLICABLE CODES ARE:
FLORIDA BUILDING CODE 2010
A.C.I. 318 BUILDING CODE REQUIREMENTS FOR REINFORCED CONCRETE.
A.I.S.C. MANUAL OF STEEL CONSTRUCTION, 9th EDITION.
ASCE 7-2010

SHOP DRAWING SUBMITTALS:
-SUBMIT ONE SEPIA AND ONE PRINT OF ALL SHOP DRAWINGS LISTED BELOW. IF SIGNED AND SEALED SHOP DRAWINGS ARE REQUIRED, THEN SUBMIT TWO ADDITIONAL SIGNED AND SEALED PRINTS FOR APPROVAL.
-SHOP DRAWINGS:
REINFORCED STEEL.
STRUCTURAL STEEL.
CONCRETE MIX DESIGN.

TIMBER:
- ALL ROOF MEMBERS TO BE SECURED TO TIE BEAM OR OTHER STRUCTURAL ELEMENT WITH HURRICANE ANCHORS.
- TRUSS MANUFACTURER TO SUBMIT SHOP DRAWINGS SIGNED AND SEALED BY HIS REGISTERED ENGINEER BEFORE SUBMITTING FOR APPROVAL.

MASONRY NOTES: (TYPICAL FOR ALL LEVELS)

1. ALL BLOCK WALLS SHALL BE TWO CELL HOLLOW CONCRETE MASONRY BLOCK MANUFACTURED IN CONFORMANCE WITH ASTM C-90 AND PROJECT SPECS. THESE MASONRY UNITS SHALL PROVIDE A MINIMUM PRISM STRENGTH F'm= 1500 PSI IN 28 DAYS AS DELIVERED TO THE JOB SITE. MANUFACTURER SHALL SUBMIT PRISM TEST RESULTS FOR ALL MASONRY USED ON THE PROJECT PRIOR TO CONSTRUCTION. THREE PRISMS SHALL BE MADE FOR EACH TEST OF 5000 SQ. FT. OF WALL. PRISMS SHALL BE TWO BLOCK HIGH, USING TYPE M MORTAR ON FACE SHELL ONLY AND MADE TESTED IN CONFORMANCE WITH A.S.T.M. C 140-98, TOGETHER WITH A.S.T.M. E 447, "METHOD B AS MODIFIED IN ACI 530.1 92. MASONRY UNIT STRENGTH = 1500 PSI
2. ALL GROUTING SHALL COMPLY WITH ASTM C-476 WITH A MINIMUM COMPRESSIVE STRENGTH OF 3000 PSI IN 28 DAYS. MIX SHALL HAVE 3/8" MAX. SIZE AGGREGATE WITH A MINIMUM SLUMP OF 8". GROUT SHALL BE SAMPLED AND TESTED AS PER ASTM C-39, WITH A MIN. OF 3 TESTS PER 30 YD. OR LESS BEING PLACED EACH DAY.
3. TYPE M MORTAR SHALL BE USED EXCLUSIVELY ON THIS PROJECT AND PROPORTIONED AS OUTLINED UNDER ASTM C-270. HOLLOW UNITS SHALL BE LAID WITH FULL MORTAR COVERAGE ON HORIZONTAL AND VERTICAL FACE SHELLS EXCEPT THAT WEBS SHALL ALSO BE BEDDED IN ALL COURSES OF COLUMNS, IN THE STARTING COURSE ON FOOTINGS AND SOLID FOUNDATION WALLS, AND AT GROUTED CELLS. HORIZONTAL AND VERTICAL FACE JOINTS SHALL BE 3/8" THICK± U.O.N. VERTICAL JOINTS SHALL BE SHOVED TIGHT. MORTAR PROTRUSIONS EXTENDING INTO CELLS OR CAVITIES (THAT ARE TO BE REINFORCED AND GROUTED) SHALL BE REMOVED. ALLOW MIN. 24 HOURS FOR MORTAR TO CURE PRIOR TO GROUTING.
4. STANDARD HIGH-LIFT GROUTING PROCEDURES SHALL BE FOLLOWED. LAY UP BLOCK AS REQUIRED. DROP VERTICAL STEEL INTO CELLS CONTAINING DOWELS AND SECURE IN PLACE. PROVIDE CUTOUT ON FACE FOR CLEAN OUT, STEEL TYING AND INSPECTING, AND GROUT FLOW VERIFICATION. GROUTING SHALL BE DONE IN MAX. OF 4'-0" LIFTS, CONTINUING AROUND BUILDING AND RETURNING TO THE STARTING POINT WITH APPROXIMATELY ONE HOUR DELAY PRIOR TO COMMENCING WITH NEXT 4'-0" GROUT LIFT. GROUTING SHALL BE CONTINUOUS UNTIL COMPLETION. THE LEVEL OF GROUT SHALL BE STOPPED 1-1/2" FROM TOP OF THE LAST MASONRY UNIT. WHERE BREAK AWAY OR BREAK OUT IS CALLED FOR OR REQUIRED, A SAW CUT SHALL BE USED. FOLLOW ABOVE PROCEDURE TO ROOF LEVEL.
5. ALL WALLS SHALL BE REINFORCED AND GROUTED VERTICAL AND HORIZONTAL CONTINUOUS AS SHOWN ON DRAWINGS. ALL WALL OPENINGS SHALL HAVE A MIN. OF 2 #5 VERTICAL EA. SIDE AND 2 #5 TOP AND BOTTOM(U.O.N. ON PLANS AND SCHEDULES). ALL SPLICING IN REINFORCING BARS SHALL BE A MIN. LAP OF 6 X BAR NUMBER. MASONRY CONTRACTOR SHALL PROVIDE "L-ADUR" TYPE "DUR-O-WALL" HORIZONTAL REINFORCING AT ALTERNATE COURSE 16" O/C U.O.N. DUR-O-WALL SHALL BE CONTINUOUS WITH A MIN. SPLICE OF 6". PROVIDE PREFAB TEES AND CORNER SECTION AS REQUIRED. ALL LINTEL REINFORCING BARS SHALL EXTEND NOT LESS THAN 24" BEYOND EA. SIDE OF ALL OPENINGS.
6. MASONRY CONTRACTOR SHALL LAY BLOCK UNITS SO AS TO ASSURE TIGHT HEAD JOINTS AND SNUG BED JOINTS FOR SHRINKAGE CONTROL AND WATER TIGHTNESS. MORTAR JOINTS SHALL BE TOOLED WHEN THUMB PRINT HARD TO INCREASE WATER TIGHTNESS. ALL ADJUSTMENTS TO BLOCKS NOTED ON PLANS SHALL BE SAW CUT. WHERE BREAK AWAY OR BREAK OUT IS CALLED FOR, A SAW CUT SHALL BE USED.
7. CONTRACTOR SHALL RETAIN THE SERVICES OF AN INDEPENDENT TESTING LAB TO PROVIDE TESTING IN CONFORMANCE TO PLANS AND SPECIFICATIONS. ALL TESTING SHALL BE PAID BY THE OWNER.
8. ALL MASONRY DESIGN AND CONSTRUCTION SHALL COMPLY WITH ACI 530-92 AND ACI 530.1-92
   - PROVIDE # 9 TRUSS TYPE (LADDER TYPE FOR REINFORCED MASONRY) HORIZONTAL MASONRY REINF. @ 16" O/C IN ALL MASONRY WALLS
   - IN ALL VERTICAL REINFORCEMENT PROVIDE FOUNDATION DOWELS AND STANDARD HOOKS AT TOP TIE BEAM.
   - SPLICE VERTICAL MASONRY WALL REINFORCEMENT 48 BAR DIAMETERS AS FOLLOWS:
     FOR # 5 BARS: 30"
     FOR # 6 BARS: 36"
     FOR # 7 BARS: 42"

STRUCTURAL STEEL:
-ALL STRUCTURAL STEEL PLATES SHALL CONFORM TO A.S.T.M. A-36 HOT DIPPED GALVANIZED.
-PLATES SHALL BE TOUCHED AFTER WELDING HAS TAKEN PLACE.
-ALL STRUCTURAL STEEL WELDING SHALL BE PERFORM WITH A.W.S. D.1.1.
-ALL ANCHOR BOLTS SHALL CONFORM TO A.S.T.M. A-307.
-ALL BOLTS SHALL CONFORM TO A.S.T.M. A-325.
- ALL STRUCTURAL TUBING SHALL BE CONCRETE FILLED AND CONFORM TO A. S. T. M. A-500, PROVIDE 1/4" DIA. PRESSURE RELIEF HOLES IN EACH COLUMN, AT TOP, BOTTOM AND MID-POINT. (FY= 46 K. S. I.)
-PROVIDE ONE SHOP COAT OF RUST INHIBITING PAINT MIN. 3 ML. DRY FILM THICKNESS.)
-FABRICATIONS AND ERECTIONS SHALL BE DONE IN ACCORDANCE WITH THE LATEST A.I.S.C. SPECIFICATIONS.

STRUCTURAL WOOD:
- ALL LUMBER FOR JOISTS, RAFTERS, BEAMS AND BEARING STUDS & EXTERIOR WALLS SHALL BE SOUTHRN PINE NO.2 AND SHALL HAVE A MINIMUM EXTREME FIBER STRESS IN BENDING OF Fb = 1200 PSI. (E=1760000 P.S.I.)
- ALL LUMBER THAT IS USED AS STRUCTURAL MEMBERS OR SHEATHING SHALL BE PRESSURE TREATED AGAIST ATTACK BY TERMITES AND DAMPNESS
- ALL WOOD CONNECTORS AND ACCESORIES SHALL BE GALVANIZED
- ALL LUMBER SHALL BE SOUTHERN PINE No. 2
- WOOD FOR TRELLIS SHALL BE NORTHERN CEDAR NO.2 AND SHALL HAVE A MINIMUM EXTREME FIBER STRESS IN BENDING OF Fb = 550 PSI.

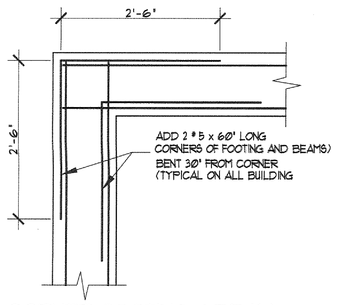

CORNER FOOTING / BEAM BAR DETAIL

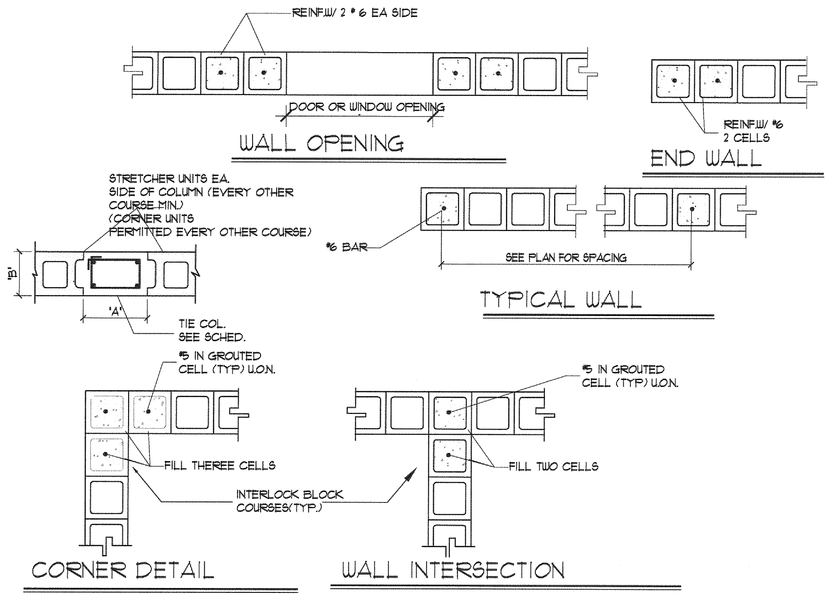

CONCRETE COLUMN SCHEDULE

MARK	SIZE	VERT. REINF.	TIES	REMARKS
TC	8" x 12"	4 #5	#3 @ 8"	DET A
TC-1	8" x 16"	6 #6	#3 @ 8"	DET B
TC-2	8" x 21"	6 #5	#3 @ 8"	DET B
TC-3	8" x 19"	4 #6	#3 @ 8"	DET A
TC-4	8" x 30"	6 #6	#3 @ 8"	DET B
TC-5	8" x 16"	6 #5	#3 @ 8"	DET B
TC-6	SEE DET.	10 #6	#3 @ 8"	
1	16" X 16"	4 #5	#3 @ 8"	CMU COL.
2	8"X12"	4 #5	#3 @ 8"	DET A
3	8" x 22"	6 #5	#3 @ 8"	DET B
4	8" x 24"	6 #6	#3 @ 8"	DET B
5	8" x 21"	6 #5	#3 @ 8"	DET A

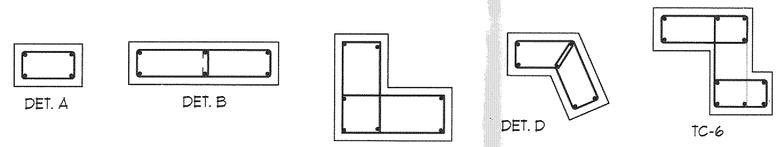

BEAM SCHEDULE

MARK	ELEV.	SIZE B x D	BOTT. No.	BOTT. SIZE	TOP CONT. No.	TOP CONT. SIZE	'C' BARS No.	'C' BARS SIZE	'E' BARS No.	'E' BARS SIZE	STIRRUPS No.	STIRRUPS SIZE	STIRRUPS SPACING EACH END	REMARKS
B-1	+15'-4"	16" x 45"	3	#8	2	#6						#3	@ 12" O.C.	CANT BEAM
B-2	+15'-4"	16" X 45"	3	#8	3	#8						#3	@ 12" O.C.	
B-3	+10'-0"	8" X 36"	2	#6	2	#6						#3	@ 12" O.C.	
B-4	+14'-0"	8" X 24"	2	#8	2	#5						#3	@ 10" O.C.	
B-5	+18'-8"	16" X 26"	3	#6	3	#6						#3	@ 10" O.C.	
B-6	+12'-6"	16" x 16"	3	#6	2	#5						#3	@ 10" O.C.	
B-7	+16'-0"	8" x 16"	2	#6	2	#5						#3	@ 8" O.C.	
B-8	+10'-0"	8" X 24"	2	#8	2	#5						#3	@ 10" O.C.	
B-9	+12'-0"	8" X 12"	2	#6	2	#5						#3	@ 6" O.C.	
B-10	+10'-0"	8" X 24"	2	#6	2	#6						#3	@ 10" O.C.	
B-11	+9'-0"	8" X 12"	2	#6	2	#6						#3	@ 8" O.C.	
B-12	+12'-0"	8" X 48"	2	#7	2	#5						#3	@ 6" O.C.	
TB	SEE PLAN	8" X 12"	2	#5	2	#5						#3	@ 12" O.C.	
TB-1	SEE PLAN	16" X 12"	2	#5	2	#5						#3	@ 12" O.C.	

SEE INTERMEDIATE BEAM REINFORCING SCHEDULE THIS SHEET

FOOTING SCHEDULE

MARK	SIZE	REINF. EA. WAY BOTT.	REMARKS
F-3	3'-0" X 3'-0" X 12"	4 # 4	
F-4	4'-0" X 4'-0" X 12"	5 # 5	
F-5	5'-0" X 5'-0" X 12"	6 # 5	
F-5.5	5'-6" X 5'-6" X 14"	7 # 5	
F-4X6	5'-6" X 5'-6" X 14"	#5 @12"	
F-7X12.5	7'-0" X 12'-4" X 16"	#6 @ 8"	
WF-16	16" X 12"	2 #5 CONT.	
WF-18	18" X 12"	3 #5 CONT.	
WF-24	24" X 12"	3 #5 CONT.	#4 @ 16" TRANSV.

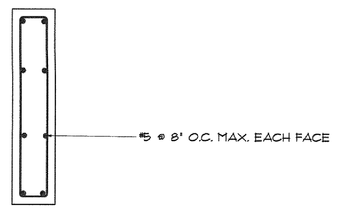

TYPICAL INTERMEDIATE REINFORCING DETAIL
N.T.S.

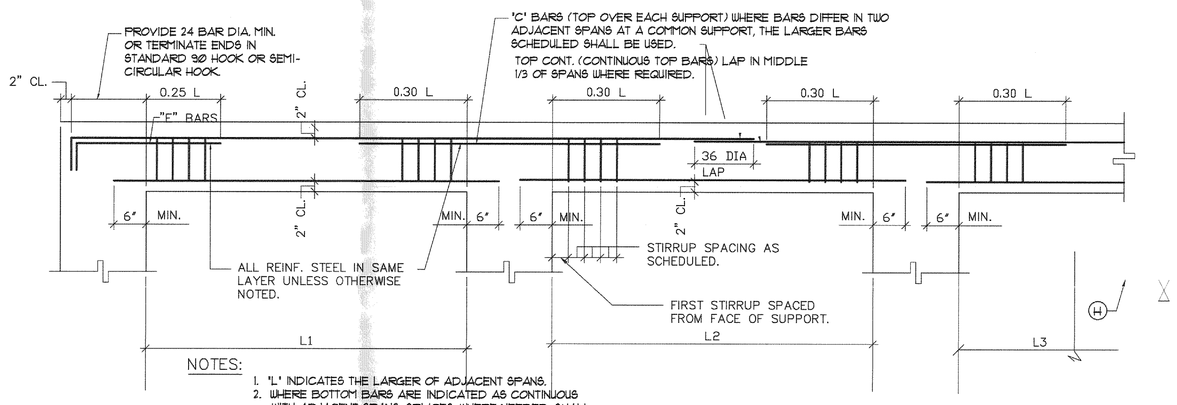

NOTES:
1. "L" INDICATES THE LARGER OF ADJACENT SPANS.
2. WHERE BOTTOM BARS ARE INDICATED AS CONTINUOUS WITH ADJACENT SPANS, SPLICES, WHERE NEEDED, SHALL BE MADE IN THE END 1/3 OF SPAN WITH 24 DIA LAP.

TYPICAL BEAM REINF. PLACING DIAGRAM
N. T. S.

BELLÓN architecture
13131 S.W. 132 STREET
SUITE 104
MIAMI, FLORIDA 33186
T. (305) 278-7776
F. (305) 278-7473
WWW.BELLONMILANES.COM
AA-26002616
ARCHITECTURE
LAND PLANNING
INTERIORS
CONSTRUCTION MANAGEMENT

CONSULTANTS

A CUSTOM RESIDENCE FOR:
Mr. AND MRS. R. SANCHEZ / NOLAN RODRIGUEZ
13940 OLD CUTTLER ROAD
PALMETTO BAY, FLORIDA

MARK	DATE	DESCRIPTION

PROJECT No.
DRAWN BY:
CHECKED BY:
DATE:

LEOPOLDO BELLON, AIA (AR-6737)

SHEET TITLE

S-5

SHEET OF

JOSE L GUZMAN P.E.
4869 SW 75TH AVENUE Phone: 786-338 1082
MIAMI, FLORIDA 33155 FAX: 305-260 0364
PE00056138 EMAIL: JGUZMANALBA@AOL.COM

LEGEND:

- 1-WAY SWITCH
- 3-WAY SWITCH
- 4-WAY SWITCH
- SMOKE DETECTOR
- SMOKE DETECTOR W/ CARBON MONOXIDE DETECTOR
- JUNCTION BOX
- E.F. EXHAUST FAN
- ELECTRICAL FLOOR OUTLET
- ELECTRICAL OUTLET
- CEILING FAN WITH LIGHT
- PENDANT LIGHTING FIXTURE
- CEILING OUTLET LIGHTING
- WALL MOUNTED LIGHTS
- HI-HAT
- FLUORESCENT COVE LIGHT FIXTURE
- WALL WASH FIXTURE
- TELEVISION ANTENNA
- TELEPHONE JACK
- LANDSCAPING UP LIGHT
- STEP LIGHT
- VAPOR PROOF LIGHT FIXTURE
- ELECTRICAL PANEL
- ELECT. DISCONNECTOR
- RECESSED SOFFIT LIGHT
- UNDER CABINET LIGHT
- HEAT LAMP & EXH (TYP)

ALL FLOOR AND CEILING ELEVATIONS W/ AFF CORRESPOND TO FINISH FLOOR LEVEL

NOTE: ALL T.V. OUTLETS SHOWN TO BE AT 5'-0" A.F.F.

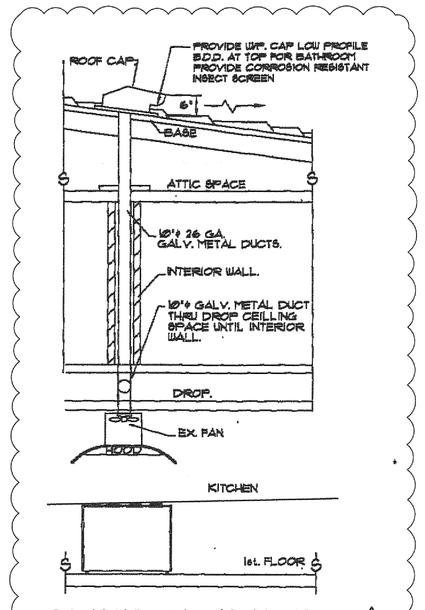

COOK HOOD EXHAUST RISER
N.T.S.
1

ELECTRICAL GROUND FLOOR PLAN

SCALE: 3/16" =1'-0"

BELLÓN architecture

13131 S.W. 132 STREET
SUITE 104
MIAMI, FLORIDA 33186
T. (305) 278-7776
F. (305) 278-7473
WWW.BELLONMILANES.COM
AA-26002616

ARCHITECTURE
LAND PLANNING
INTERIORS
CONSTRUCTION MANAGEMENT

CONSULTANTS

A CUSTOM RESIDENCE FOR:

Mr. AND MRS. R. SANCHEZ / NOLAN RODRIGUEZ
13940 OLD CUTTLER ROAD
PALMETTO BAY, FLORIDA

MARK	DATE	DESCRIPTION
1	12-17-15	B.D.C

PROJECT No. LB269
DRAWN BY: JP / AM
CHECKED BY: LB
DATE: 06-18-14

STATE OF FLORIDA
LEOPOLDO BELLON
AR-8737
REGISTERED ARCHITECT

LEOPOLDO BELLON, AIA (AR-8737)

SHEET TITLE
ELECTRICAL GROUND FLOOR PLAN

SHEET E-1 OF

LEGEND:

- 1-WAY SWITCH
- 3-WAY SWITCH
- 4-WAY SWITCH
- SMOKE DETECTOR
- SMOKE DETECTOR W/ CARBON MONOXIDE DETECTOR
- JUNCTION BOX
- E.F. EXHAUST FAN
- ELECTRICAL FLOOR OUTLET
- ELECTRICAL OUTLET
- CEILING FAN WITH LIGHT
- PENDANT LIGHTING FIXTURE
- CEILING OUTLET LIGHTING
- WALL MOUNTED LIGHTS
- HI-HAT
- FLUORESCENT COVE LIGHT FIXTURE
- WALL WASH FIXTURE
- TELEVISION ANTENNA
- TELEPHONE JACK
- LANDSCAPING UP LIGHT
- STEP LIGHT
- VAPOR PROOF LIGHT FIXTURE
- ELECTRICAL PANEL
- ELECT. DISCONNECTOR
- RECESSED SOFFIT LIGHT
- UNDER CABINET LIGHT
- HEAT LAMP & EXH (TYP)

ALL FLOOR AND CEILING ELEVATIONS W/ AFF CORRESPOND TO FINISH FLOOR LEVEL

NOTE: ALL T.V. OUTLETS SHOWN TO BE AT 5'-0" A.F.F.

ELECTRICAL GROUND FLOOR PLAN

SCALE: 3/16" =1'-0"

BELLÓN architecture

13131 S.W. 132 STREET
SUITE 104
MIAMI, FLORIDA 33186

T. (305) 278-7776
F. (305) 278-7473
WWW.BELLONMILANES.COM
AA-26002616

ARCHITECTURE
LAND PLANNING
INTERIORS
CONSTRUCTION MANAGEMENT

CONSULTANTS

A CUSTOM RESIDENCE FOR:

Mr. AND MRS. R. SANCHEZ / NOLAN RODRIGUEZ

13940 OLD CUTTLER ROAD
PALMETTO BAY, FLORIDA

MARK	DATE	DESCRIPTION

PROJECT No. LB269
DRAWN BY: JP / AM
CHECKED BY: LB
DATE: 06-18-14

STATE OF FLORIDA · LEOPOLDO BELLON · REGISTERED ARCHITECT · AR8737

LEOPOLDO BELLON, AIA (AR-8737)

SHEET TITLE
ELECTRICAL GROUND FLOOR PLAN

E-1

SHEET OF

ELECTRICAL NOTES

1. ALL ELECTRICAL WORK SHALL BE IN ACCORDANCE WITH THE NATIONAL ELECTRICAL CODE AND ALL APPLICABLE LOCAL CODES.

2. COORDINATE ELECTRICAL SERVICE W/FLORIDA POWER AND LIGHT COMPANY.

3. ALL TELEPHONE RELATED EQUIPMENT PER SFBC4502-2 (A) (11)

4. ELECTRICAL INSTALLATION DESIGN OF THIS PLAN IN IN COMPLIANCE AS SET FORTH BY STATE OF FLORIDA STATUTES MODEL ENERGY EFFICIENCY CODES.

5. THE CONTRACTOR WILL EXAMINE THE JOB SITE AND DETERMINE FOR HIMSELF PRIOR TO SUBMISSION OF BID EXISTING CONDITIONS.

6. ALL ELECTRICAL WORK SHALL BE PERFORMED BY A LICENSED ELECTRICAL CONTRACTOR. IT WILL BE HIS RESPONSIBILITY TO SECURE AND PAY FOR ANY PERMITS, CERTICATES OF INSPECTION, AS REQUIRED.

7. SUBSTITUTE MATERIALS EQUIPMENT OR METHODS SHALL NOT BE MADE WITHOUT APPROVAL OF THE ENGINEER. IF THE USE OF A SUBSTITUTE REQUIRES ANY CHANGE IN WORK. THE NECESSARY FOR SUCH CHANGE WILL BE BROUGHT TO THE ATTENTION OF THE ENGINEER. AND IF APPROVED, SHALL BE MADE AT NO COST TO THE OWNER.

8. CLEAN UP SUCH TRASH AND DEBRIS GENERATED BY THE WORK AND LEAVE COMPLETED WORK IN A CLEAN, UNDAMAGED, AND FINISHED CONDITION READY TO RECEIVE WITHOUT FURTHER PREPARATION, UNLESS SO SPECIFIED IN OTHER SECTIONS, ANY ADJACENT OR ABUTTING WORK TO BE PERFORMED BY OTHERS.

9. MATERIALS, APPLIANCES, DEVICES AND EQUIPMENT SHALL MEET WITH THE REQUIREMENTS OF UNDERWRITERS' LABORATORIES AND SHALL BE NEW AND THE LATEST STANDARD PRODUCTS OF MANUFACTURERS REGULARLY ENGAGED IN THE PRODUCTION OF THE ITEM, UNLESS OTHERWISE INDICATED. LIKE ITEMS SHALL BE THE PRODUCT OF A SINGLE MANUFACTURER.

10. ALL CONDUCTORS SHALL BE COPPER AND RUN IN CONDUIT. WIRE SIZE SHALL BE THWN UNLESS OTHERWISE NOTED ON PLANS. PROVIDE GROUND CONDUCTOR PER NEC 250-95.

11. LOCATION OR OULETS IN ELECTRICAL DRAWINGS IS DIAGRAMMATIC: CHECK MANUFACTURER'S DRAWING FOR EXACT LOCATION OF OUTLETS.

12. CIRCUIT NUMBERS SHOWN ARE FOR CALCULATIONPURPOSES ONLY. ACTUAL CIRCUITING MAY VARY ACCORDING TO NEC AND LAST FBC PROVIDE PANEL SCHRDULE AFTER COMPLETION.

13. A/C EQUIPMENT WIRING, BREAKER AND FUSE SIZES ARE BASED ON A/C EQUIPMENT SPECIFIED ON ORIGINAL CONTRACT DRAWINGS. CONTRACTOR IS RESPONSIBLE FOR PROVIDING ALL WIRING, BREAKER AND FUSES SIZES IN ACCORDANCE WITH A/C EQUIPMENT NAMEPLATE REQUIREMENTS IF DIFFERENT FROM THAT SPECIFIED ON DRAWINGS, AS WELL AS ANY FEEDER CHANGES BEING AFFECTED BY THIS CHANGE. CONTRACTOR SHALL MAKE ABOVE MENTIONED CHANGES AT NO EXTRA COST. HACR CIRCUIT BREAKERS MAY BE USED IN PLACE OF FUSES. USE NON-AUTOMATIC SWITCH FOR A/C COND. DISCONNECT.

14. RANGE AND DRYER SHALL HAVE BOTH NEUTRAL & GROUNDING WIRE PER NBC 250-60

15. APPLIANCES LOAD ARE SHOWN AS MAXIMUM TO BE INSTALLED WIRES TO BE SIZED ACCORDING TO NAME PLATE DATA. IT SHALL BE PERMISSIBLE TO CHANGE CKT. NO. WITHOUT CHANGING QUANTITY OF CIRCUITS

16. NOW IN EFFECT NEC 2011; FBC 2014

ELECTRICAL LOAD CALCULATIONS

ITEM	PANEL A	PANEL B
SQ. FT.	3,338	3,338
GENERAL LIGHTING AT 3 W.S.F.	10,014	10,014
SMALL APPLIANCES CIRCUITS	4,500	
REFRIGERATOR	1,000	
DISHWASHER	1,200	
WASHER		1,500
DRYER		5,000
WATER HEATER	11,800	11,800
MICROWAVE	800	
DISPOSAL	800	
COOK TOP	8,000	
SUB PANEL C		5,800
WHIRLPOOL	2,000	
DOOR OPE'R	1,600	
OVEN		7,000
CONNECTED LOAD (LESS A/C)	41,714	37,314
FIRST 10,000 @ 100%	10,000	10,000
REST @ 40%	12,686	10,926
A/C OR HTNG @ 100%	15,000	10,000
DEMAND LOAD WATTS	37,686	30,926
PHASE AMPS.	157	129
SERVICE SIZE	200	200
NEUTRAL LOAD LIGHTING, WASHER, SMALL APPL.	14,514	11,514
3 KW @ 100%	3,000	3,000
REST @ 35%	4,030	2,980
COOK TOP @ 70%	5,600	
DRYER @ 70%		3,500
OVEN 70%		4,900
TOTAL NEUTRAL W.	12,630	14,380
NEUTRAL AMPS	53	60

NOTE:

SMOKE DETECTORS SHALL NOT BE CLOSER THAN 3' FROM AIR REGISTER & BATH DOOR AND 20' FROM COOKING APPLIANCES.

NOTE:

PADDLE FANS EXCEEDING 35 LBS. WITH OR WITHOUT ACCESSORIES SHALL BE SUPPORTED INDEPENDENTLY OF THE OUTLET BOX. (TYP.)

NOTE:

SMOKE DETECTORS SYSTEM TO BE INSTALLED IN ACCORDANCE W/NFPA 72/99

NOTE:

PROVIDE CONDUIT FOR INTERNET & DSL HIGH SPEED AND CABLE FOR TV THAT MEETS HDTV REQUIREMENTS.

NOTE:

ALL ELECTRICAL RECEPTACLES TO BE TAMPER RESISTANT TYPE. AS PER NEC 406.11

PROVIDE ARC / FAULT CIRCUIT-INTERRUPTER PROTECTION FOR ALL AREAS. AS PER NEC 210.12

LIGHTING EQUIPMENT NOTE:

A MINIMUM OF 50% OF THE LAMPS IN PERMANENTLY INSTALLED LIGHTING FIXTURES SHALL BE HIGH-EFFICACY LAMPS. AS PER FBC 404.

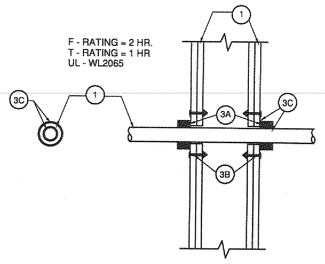

WALL ASSEMBLY - U.L. SYSTEM WL-1039
FIRE PENETRATION DETAIL

1. 2-HOUR FIRE RATED GYPSUM WALLBOARD/STUD ASSEMBLY
2. PLASTIC PIPE - 1-1/2" DIA. (OR SMALLER) SCH. 40 PVC PIPE FOR USE IN CLOSED OR VENTED PIPING SYSTEMS WITH A NOM. ANNULAR SPACE OF 1/16"
3. A) TREMSTOP WS - WRAP STRIPS, TIGHTLY WRAPPED 3 TIMES AROUD PIPE

B) TREMSTOP MCR - STEEL RESTRICTING COLLAR
C) PYRE-SIL - MIN. 1/4" THICH SEALANT APPLIED TO WALL/COLLAR AND COLLAR/PIPE INTERFACES

Metallic Pipe - Any of the following may be used:

- Nominal 4" diameter (or smaller) Schedule 10 (or heavier) steel pipe. A minimum 1/4" to maximum 1-1/4" annular space between pipe and periphery of opening is required - 0 hr. T Rating.

- Nominal 4" diameter (or smaller) cast or ductile iron pipe. A minimum 1/4" to maximum 1-5/8" annular space between pipe and periphery of opening is required - 0 hr. T Rating.

- Nominal 4" diameter (or smaller) electrical metallic tubing or steel conduit. A minimum 1/4" to maximum 1-5/8" annular space between pipe and periphery of opening is required. A 1/2" diameter (or smaller) electrical metallic tubing or steel conduit

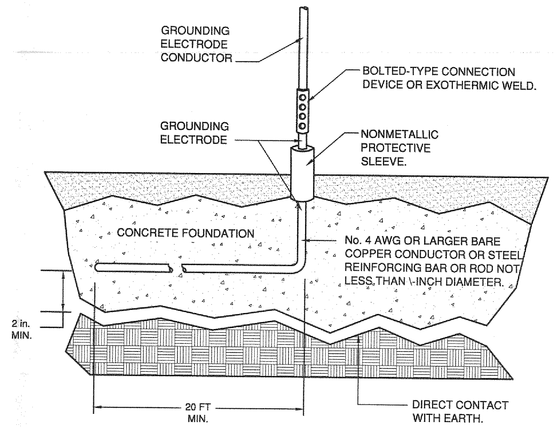

ENCASED GROUNDING ELECTRODE DETAIL
NTS.

CONNECT TO A CONCRETE-ENCASED ELECTRODE CONSISTING OF AT LEAST 20 FT OF ONE OR MORE BARE OR ZINC GALVANIZED STEEL REINFORCING BARS OF NOT LESS THAN 1/2 INCH OR CONSISTING OF AT LEAST 20 FT. OF BARE COPPER CONDUCTOR NOT SMALLER THAN No. 4 AND LOCATED WITHIN AND NEAR THE BOTTOM OF A CONCRETE FOUNDATION OR FOOTING THAT IS IN DIRECT CONTACT WITH EARTH.

TYPE : SQUARE "D" or APPROVED EQUAL
SERVICE :
VOLTAGE : 240/120 V 1 Ø - 3 W.
MOUNTING : RECESSED AT GARAGE

PANEL-"A"

MAIN BUS : 200 AMPS
NEUTRAL : 200 AMPS
MAINS : L.O.
A/C : 10000

AMPS	POLES	TOTAL V.A.	COND SIZE+	WIRE	REMARKS	CKT. NO.	CKT. NO.	REMARKS	WIRE	COND SIZE+	TOTAL V.A.	POLES	AMPS
30	2	4800	3/4	10	A/C CU-1	1	2	A/C AHU-1	8	3/4	5000	2	40
						3	4						
50	2	10000	1"	6	A/C AHU-2	5	6	A/C CU-2	10	3/4	4800	2	30
						7	8						
50	2	8000	3/4	8	COOK TOP	9	10	WHIRLPOOL	12	1/2	2000	2	20
						11	12						
20	1	1500	1/2	12	SMALL APPLIANCES	13	14	REFRIGERATOR	12	1/2	1000	1	20
↓	↓	↓	↓	↓	↓	15	16	DISHWASHER	12	1/2	1200	1	20
						17	18	MICROWAVE	12	1/2	800	1	20
						19	20	DISPOSAL	12	1/2	800	1	20
						21	22	BATH GFI RECEPTACLE	12	1/2	1500	1	20
20	1	600	1/2	12	RECEPTACLE OUT GFI	23	24	↓	↓	↓	↓	↓	↓
20	1	1200	1/2	12	CEILING FAN	25	26	RECEPTACLE BED - 2	12	1/2	600	1	20
20	1	600	1/2	12	RECEPTACLE LIVING	27	28	RECEPTACLE MASTER	12	1/2	600	1	20
20	1	600	1/2	12	RECEPTACLE FAMILY	29	30	RECEPTACLE	12	1/2	600	1	20
20	1	600	1/2	12	LIGHTING	31	32	INST. WATER HEATER	6	1"	11800	2	60
						33	34						
						35	36						
						37	38	OVEN	10	3/4	7000	2	40
						39	40						
					SPACES	41	42	SPACES					

DEMAND LOAD : 37686 VA/240 = 157 AMPS
(SEE LOAD CALCULATION)

FEEDER : 3 # 3/0 THWN - 2" COND.
FED FROM : SERVICE.

TYPE : SQUARE "D" or APPROVED EQUAL
SERVICE :
VOLTAGE : 240/120 V 1 Ø - 3 W.
MOUNTING : RECESSED AT GARAGE

PANEL-"B"

MAIN BUS : 200 AMPS
NEUTRAL : 200 AMPS
MAINS : L.O.
A/C : 10000

AMPS	POLES	TOTAL V.A.	COND SIZE+	WIRE	REMARKS	CKT. NO.	CKT. NO.	REMARKS	WIRE	COND SIZE+	TOTAL V.A.	POLES	AMPS
30	2	4800	3/4	10	A/C CU-3	1	2	A/C AHU-3	6	1"	10000	2	50
						3	4						
50	2	7000	3/4	8	OVEN	5	6	INST. WATER HEATER	6	1"	11800	2	60
						7	8						
60	2	5800	1	6	SUB PANEL C	9	10	DRYER	10	1/2	5000	2	30
						11	12						
						13	14	WASHER	12	1/2	1500	1	20
						15	16	RECEPTACLE	12	1/2	1500	1	20
20	1	600	1/2	12	RECEPTACLE BED - 3	17	18	RECEPTACLE BED - 5	↓	↓	↓	↓	↓
20	1	600	1/2	12	RECEPTACLE BED - 4	19	20	RECEPTACLE GAME RM.	12	1/2	600	1	20
20	1	600	1/2	12	LIGHTING	21	22	LIGHTING	12	1/2	600	1	20
↓	↓	↓	↓	↓	↓	23	24						
						25	26	↓	↓	↓	↓	↓	↓
						27	28						
20	1	1500	1/2	12	BATH GFI RECEPTACLE	29	30	INST. WATER HEATER	6	1"	11800	2	60
20	1	600	1/2	12	LAUNDRY GFI RECEPT	31	32						
20	1	600	1/2	12	GFI RECEPTACLE	33	34	LIGHTING	12	1/2	600	1	20
20	1	600	1/2	12	RECEPTACLE PANTRY	35	36						
					SPACE	37	38	↓	↓	↓	↓	↓	↓
						39	40	SPACES					
					↓	41	42	↓					

DEMAND LOAD : 30926 VA/240 = 129 AMPS
(SEE LOAD CALCULATION)

FEEDER : 3 # 3/0 THWN - 2" COND.
FED FROM : SERVICE.

TYPE : SQUARE "D" or APPROVED EQUAL
SERVICE :
VOLTAGE : 240/120 V 1 Ø - 3 W.
MOUNTING :

SUB PANEL-"C"

MAIN BUS : 60 AMPS
NEUTRAL : 60 AMPS
MAINS : L.O.
A/C :

AMPS	POLES	TOTAL V.A.	COND SIZE+	WIRE	REMARKS	CKT. NO.	CKT. NO.	REMARKS	WIRE	COND SIZE+	TOTAL V.A.	POLES	AMPS
20	1	800	1/2	12	DOOR OPENER	1	2	CEILING FAN	12	1/2	900	1	20
20	1	800	1/2	12	DOOR OPENER	3	4	CEILING FAN	12	1/2	300	1	20
20	1	600	1/2	12	LIGHT TERRACE	5	6	LIGHT GARAGE	12	1/2	600	1	20
20	1	600	1/2	12	GFI RECEPTACLE TERRACE	7	8	GFI RECEPTACLE GARAGE	12	1/2	1500	1	20
20	1	1000	1/2	12	REFRIGERATOR TERRACE	9	10	ICE MAKER TERRACE	12	1/2	800	1	20

DEMAND LOAD : 5800 VA/240 = 24.16 AMPS

FEEDER : 3 # 6 THWN - 1" COND.
FED FROM : PANEL B

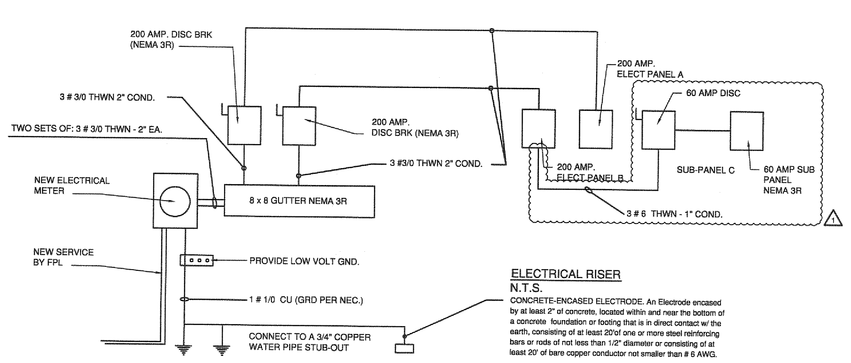

ELECTRICAL RISER
N.T.S.
CONCRETE-ENCASED ELECTRODE. An Electrode encased by at least 2" of concrete, located within and near the bottom of a concrete foundation or footing that is in direct contact w/ the earth, consisting of at least 20'of one or more steel reinforcing bars or rods of not less than 1/2" diameter or consisting of at least 20' of bare copper conductor not smaller than # 6 AWG.

ELECTRODE RISER
N.T.S.

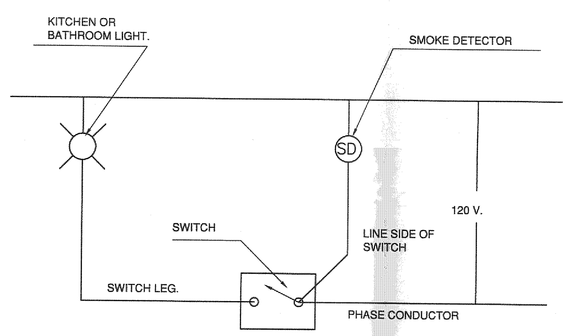

NOTE:

SMOKE DETECTOR SHALL BE HARDWIRED (110 VOLT TYPE) TO A NON-SWITCHABLE KITCHEN OR BATHROOM LIGHTING CIRCUIT WITH BATTERY BACK-UP AND SHALL NOT BE CONNECTED ONTO THE LOAD SIDE OF GROUND FAULT CIRCUIT INTERRUPTER. ALL SMOKE DETECTORS WITHIN EACH UNIT SHALL BE INTERCONNECTED.

SMOKE DETECTOR CONNECTION DETAIL
N.T.S.

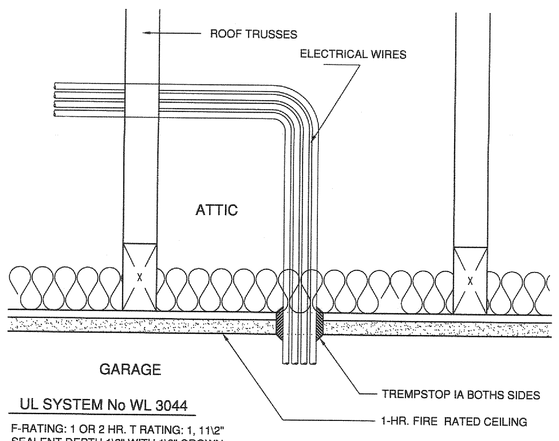

UL SYSTEM No WL 3044

F-RATING: 1 OR 2 HR. T RATING: 1, 11/2" SEALENT DEPTH 1/2" WITH 1/2" CROWN, SEALANT TO BE MANUFACTURED BY TREMSTOP IA

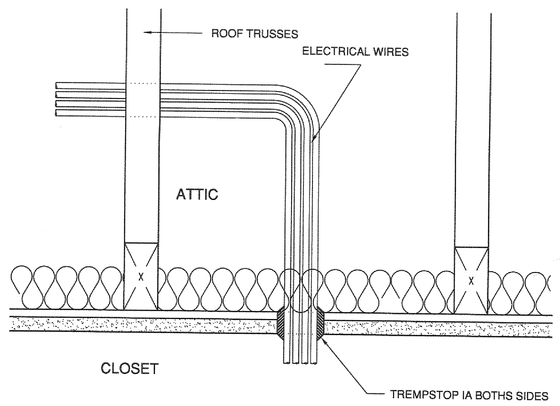

UL SYSTEM No WL 3044
N.T.S.

BELLON architecture
13131 S.W. 132 STREET
SUITE 104
MIAMI, FLORIDA 33186
T. (305) 278-7776
F. (305) 278-7473
WWW.BELLONMIAMI.COM
AA-26002616
ARCHITECTURE
LAND PLANNING
INTERIORS
CONSTRUCTION MANAGEMENT

CONSULTANTS

A CUSTOM RESIDENCE FOR:
Mr. AND MRS. R. SANCHEZ / NOLAN RODRIGUEZ
13940 OLD CUTTLER ROAD
PALMETTO BAY, FLORIDA

MARK	DATE	DESCRIPTION
1	12-17-15	B.D.C

PROJECT No.
DRAWN BY:
CHECKED BY:
DATE:

STATE OF FLORIDA
LEOPOLDO BELLON
No. AR-8737

LEOPOLDO BELLON, AIA (AR-8737)

SHEET TITLE
ELECTRICAL NOTES

E-2

SHEET OF

ELECTRICAL NOTES

1. ALL ELECTRICAL WORK SHALL BE IN ACCORDANCE WITH THE NATIONAL ELECTRICAL CODE AND ALL APPLICABLE LOCAL CODES.

2. COORDINATE ELECTRICAL SERVICE W/FLORIDA POWER AND LIGHT COMPANY.

3. ALL TELEPHONE RELATED EQUIPMENT PER SFBC4502-2 (A) (11)

4. ELECTRICAL INSTALLATION DESIGN OF THIS PLAN IN IN COMPLIANCE AS SET FORTH BY STATE OF FLORIDA STATUTES MODEL ENERGY EFFICIENCY CODES.

5. THE CONTRACTOR WILL EXAMINE THE JOB SITE AND DETERMINE FOR HIMSELF PRIOR TO SUBMISSION OF BID EXISTING CONDITIONS.

6. ALL ELECTRICAL WORK SHALL BE PERFORMED BY A LICENSED ELECTRICAL CONTRACTOR. IT WILL BE HIS RESPONSIBILITY TO SECURE AND PAY FOR ANY PERMITS, CERTICATES OF INSPECTION, AS REQUIRED.

7. SUBSTITUTE MATERIALS EQUIPMENT OR METHODS SHALL NOT BE MADE WITHOUT APPROVAL OF THE ENGINEER. IF THE USE OF A SUBSTITUTE REQUIRES ANY CHANGE IN WORK. THE NECESSARY FOR SUCH CHANGE WILL BE BROUGHT TO THE ATTENTION OF THE ENGINEER. AND IF APPROVED, SHALL BE MADE AT NO COST TO THE OWNER.

8. CLEAN UP SUCH TRASH AND DEBRIS GENERATED BY THE WORK AND LEAVE COMPLETED WORK IN A CLEAN, UNDAMAGED, AND FINISHED CONDITION READY TO RECEIVE WITHOUT FURTHER PREPARATION, UNLESS SO SPECIFIED IN OTHER SECTIONS, ANY ADJACENT OR ABUTTING WORK TO BE PERFORMED BY OTHERS.

9. MATERIALS, APPLIANCES, DEVICES AND EQUIPMENT SHALL MEET WITH THE REQUIREMENTS OF UNDERWRITERS' LABORATORIES AND SHALL BE NEW AND THE LATEST STANDARD PRODUCTS OF MANUFACTURERS REGULARLY ENGAGED IN THE PRODUCTION OF THE ITEM, UNLESS OTHERWISE INDICATED. LIKE ITEMS SHALL BE THE PRODUCT OF A SINGLE MANUFACTURER.

10. ALL CONDUCTORS SHALL BE COPPER AND RUN IN CONDUIT. WIRE SIZE SHALL BE THWN UNLESS OTHERWISE NOTED ON PLANS. PROVIDE GROUND CONDUCTOR PER NEC 250-95.

11. LOCATION OR OULETS IN ELECTRICAL DRAWINGS IS DIAGRAMMATIC: CHECK MANUFACTURER'S DRAWING FOR EXACT LOCATION OF OUTLETS.

12. CIRCUIT NUMBERS SHOWN ARE FOR CALCULATIONPURPOSES ONLY. ACTUAL CIRCUITING MAY VARY ACCORDING TO NEC AND LAST FBC PROVIDE PANEL SCHRDULE AFTER COMPLETION.

13. A/C EQUIPMENT WIRING, BREAKER AND FUSE SIZES ARE BASED ON A/C EQUIPMENT SPECIFIED ON ORIGINAL CONTRACT DRAWINGS. CONTRACTOR IS RESPONSIBLE FOR PROVIDING ALL WIRING, BREAKER AND FUSES SIZES IN ACCORDANCE WITH A/C EQUIPMENT NAMEPLATE REQUIREMENTS IF DIFFERENT FROM THAT SPECIFIED ON DRAWINGS, AS WELL AS ANY FEEDER CHANGES BEING AFFECTED BY THIS CHANGE. CONTRACTOR SHALL MAKE ABOVE MENTIONED CHANGES AT NO EXTRA COST. HACR CIRCUIT BREAKERS MAY BE USED IN PLACE OF FUSES. USE NON-AUTOMATIC SWITCH FOR A/C COND. DISCONNECT.

14. RANGE AND DRYER SHALL HAVE BOTH NEUTRAL & GROUNDING WIRE PER NBC 250-60

15. APPLIANCES LOAD ARE SHOWN AS MAXIMUM TO BE INSTALLED WIRES TO BE SIZED ACCORDING TO NAME PLATE DATA. IT SHALL BE PERMISSIBLE TO CHANGE CKT. NO. WITHOUT CHANGING QUANTITY OF CIRCUITS

16. NOW IN EFFECT NEC 2008; FBC 2010

ELECTRICAL LOAD CALCULATIONS

ITEM	PANEL A	PANEL B
SQ. FT.	3,338	3,338
GENERAL LIGHTING AT 3 W.S.F.	10,014	10,014
SMALL APPLIANCES CIRCUITS	4,500	
REFRIGERATOR	1,000	
DISHWASHER	1,200	
WASHER		1,500
DRYER		5,000
WATER HEATER	11,800	11,800
MICROWAVE	800	
DISPOSAL	00	
COOK TOP	00	
WATER PUMP (IRRIG — SPARE		2,000
WHIRLPOOL	00	
DOOR OPE'R	00	
OVEN		7,000
CONNECTED LOAD (LESS A/C)	41,714	37,314
FIRST 10,000 @ 100%	10,000	10,000
REST @ 40%	12,686	10,926
A/C OR HTNG @ 100%	15,000	10,000
DEMAND LOAD WATTS	37,686	30,926
PHASE AMPS.	157	129
SERVICE SIZE	200	200
NEUTRAL LOAD LIGHTING, WASHER, SMALL APPL.	14,514	11,514
3 KW @ 100%	3,000	3,000
REST @ 35%	4,030	2,980
COOK TOP @ 70%	5,600	
DRYER @ 70%		3,500
OVEN 70%		4,900
TOTAL NEUTRAL W.	12,630	14,380
NEUTRAL AMPS	53	60

NOTE:

SMOKE DETECTORS SHALL NOT BE CLOSER THAN 3' FROM AIR REGISTER & BATH DOOR AND 20' FROM COOKING APPLIANCES.

NOTE:

PADDLE FANS EXCEEDING 35 LBS. WITH OR WITHOUT ACCESSORIES SHALL BE SUPPORTED INDEPENDENTLY OF THE OUTLET BOX. (TYP.)

NOTE:

SMOKE DETECTORS SYSTEM TO BE INSTALLED IN ACCORDANCE W/NFPA 72/99

NOTE:

PROVIDE CONDUIT FOR INTERNET & DSL HIGH SPEED AND CABLE FOR TV THAT MEETS HDTV REQUIREMENTS.

NOTE:

ALL ELECTRICAL RECEPTACLES TO BE TAMPER RESISTANT TYPE. AS PER NEC 406.11

PROVIDE ARC / FAULT CIRCUIT-INTERRUPTER PROTECTION FOR ALL AREAS. AS PER NEC 210.12

LIGHTING EQUIPMENT NOTE:

A MINIMUM OF 50% OF THE LAMPS IN PERMANENTLY INSTALLED LIGHTING FIXTURES SHALL BE HIGH-EFFICACY LAMPS. AS PER FBC 404.

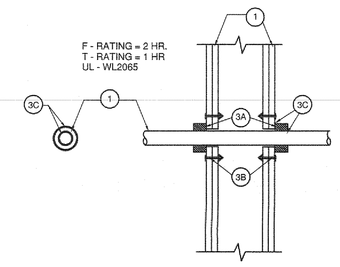

WALL ASSEMBLY - U.L. SYSTEM WL-1039
FIRE PENETRATION DETAIL

1. 2-HOUR FIRE RATED GYPSUM WALLBOARD/STUD ASSEMBLY
2. PLASTIC PIPE - 1-1/2" DIA. (OR SMALLER) SCH. 40 PVC PIPE FOR USE IN CLOSED OR VENTED PIPING SYSTEMS WITH A NOM. ANNULAR SPACE OF 1/16"
3. A) TREMSTOP WS - WRAP STRIPS, TIGHTLY WRAPPED 3 TIMES AROUD PIPE
   B) TREMSTOP MCR - STEEL RESTRICTING COLLAR
   C) PYRE-SIL - MIN. 1/4" THICK SEALANT APPLIED TO WALL/COLLAR AND COLLAR/PIPE INTERFACES

Metallic Pipe - Any of the following may be used:

- Nominal 4" diameter (or smaller) Schedule 10 (or heavier) steel pipe. A minimum 1/4" to maximum 1-1/4" annular space between pipe and periphery of opening is required - 0 hr. T Rating.

- Nominal 4" diameter (or smaller) cast or ductile iron pipe. A minimum 1/4" to maximum 1-5/8" annular space between pipe and periphery of opening is required - 0 hr. T Rating.

- Nominal 4" diameter (or smaller) electrical metallic tubing or steel conduit. A minimum 1/4" to maximum 1-5/8" annular space between pipe and periphery of opening is required. A 1/2" diameter (or smaller) electrical metallic tubing or steel conduit

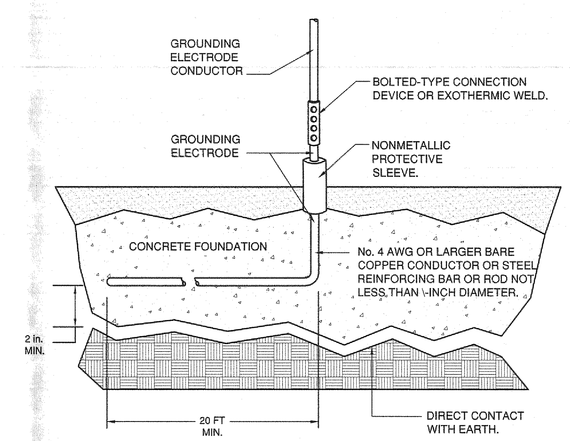

ENCASED GROUNDING ELECTRODE DETAIL
NTS.

CONNECT TO A CONCRETE-ENCASED ELECTRODE CONSISTING OF AT LEAST 20 FT OF ONE OR MORE BARE OR ZINC GALVANIZED STEEL REINFORCING BARS OF NOT LESS THAN 1/2 INCH OR CONSISTING OF AT LEAST 20 FT. OF BARE COPPER CONDUCTOR NOT SMALLER THAN No. 4 AND LOCATED WITHIN AND NEAR THE BOTTOM OF A CONCRETE FOUNDATION OR FOOTING THAT IS IN DIRECT CONTACT WITH EARTH.

PANEL-"A"

TYPE : SQUARE "D" or APPROVED EQUAL
SERVICE :
VOLTAGE : 240/120 V 1 Ø - 3 W.
MOUNTING : RECESSED AT GARAGE

MAIN BUS : 200 AMPS
NEUTRAL : 200 AMPS
MAINS : L.O.
A/C : 10000

AMPS	POLES	TOTAL V.A.	COND SIZE+	WIRE	REMARKS	CKT. NO.		CKT. NO.	REMARKS	WIRE	COND SIZE+	TOTAL V.A.	POLES	AMPS
30	2	4800	3/4	10	A/C CU-1	1		2	A/C AHU-1	8	3/4	5000	2	40
						3		4						
50	2	10000	1"	6	A/C AHU-2	5		6	A/C CU-2	10	3/4	4800	2	30
						7		8						
50	2	8000	3/4	8	COOK TOP	9		10	WHIRLPOOL	12	1/2	2000	2	20
						11		12						
20	1	1500	1/2	12	SMALL APPLIANCES	13		14	REFRIGERATOR	12	1/2	1000	1	20
↓	↓	↓	↓	↓	↓	15		16	DISHWASHER	12	1/2	1200	1	20
↓	↓	↓	↓	↓	↓	17		18	MICROWAVE	12	1/2	800	1	20
20	1	800	1/2	12	DOOR OPENER	19		20	DISPOSAL	12	1/2	800	1	20
20	1	800	1/2	12	DOOR OPENER	21		22	BATH GFI RECEPTACLE	12	1/2	1500	1	20
20	1	600	1/2	12	RECEPTACLE OUT GFI	23		24	↓	↓	↓	↓	↓	↓
20	1	1200	1/2	12	CEILING FAN	25		26	RECEPTACLE BED - 2	12	1/2	600	1	20
20	1	600	1/2	12	RECEPTACLE LIVING	27		28	RECEPTACLE MASTER	12	1/2	600	1	20
20	1	600	1/2	12	RECEPTACLE FAMILY	29		30	RECEPTACLE	12	1/2	600	1	20
20	1	600	1/2	12	LIGHTING	31		32	INST. WATER HEATER	6	1"	11800	2	60
						33		34						
						35		36	EXT. LIGHT	12	1/2	600	1	20
						37		38	OVEN	10	3/4	7000	2	40
↓	↓	↓	↓	↓	↓	39		40						
					SPACES	41		42	SPACES					

DEMAND LOAD : 37686 VA/240 = 157 AMPS
(SEE LOAD CALCULATION)

FEEDER : 3 # 3/0 THWN - 2" COND.
FED FROM : SERVICE.

PANEL-"B"

TYPE : SQUARE "D" or APPROVED EQUAL
SERVICE :
VOLTAGE : 240/120 V 1 Ø - 3 W.
MOUNTING : RECESSED AT GARAGE

MAIN BUS : 200 AMPS
NEUTRAL : 200 AMPS
MAINS : L.O.
A/C : 10000

AMPS	POLES	TOTAL V.A.	COND SIZE+	WIRE	REMARKS	CKT. NO.		CKT. NO.	REMARKS	WIRE	COND SIZE+	TOTAL V.A.	POLES	AMPS
30	2	4800	3/4	10	A/C CU-3	1		2	A/C AHU-3	6	1"	10000	2	50
						3		4						
50	2	[illegible]	[illegible]	[illegible]	OVEN	5		6	INST. WATER HEATER	6	1"	11800	2	60
						7		8						
20	2				SPARE → ION PUMP	9		10	DRYER	10	1/2	5000	2	30
						11		12						
20	1				TERRACE	13		14	WASHER	12	1/2	1500	1	20
20	1				ACLE TERRACE	15		16	RECEPTACLE	12	1/2	1500	1	20
20	1				ACLE BED - 3	17		18	RECEPTACLE BED - 5	↓	↓	↓	↓	↓
20	1	600	1/2	12	RECEPTACLE BED - 4	19		20	RECEPTACLE GAME RM.	12	1/2	600	1	20
20	1	600	1/2	12	LIGHTING	21		22	LIGHTING	12	1/2	600	1	20
						23		24						
↓	↓	↓	↓	↓	↓	25		26	↓	↓	↓	↓	↓	↓
						27		28	BATH GFI RECEPTACLE	12	1/2	1500	1	20
20	1	1500	1/2	12	BATH GFI RECEPTACLE	29		30	INST. WATER HEATER	6	1"	11800	2	60
20	1	600	1/2	12	LAUNDRY GFI RECEPT	31		32						
20	1	600	1/2	12	GFI RECEPTACLE	33		34	LIGHTING	12	1/2	600	1	20
20	1	600	1/2	12	RECEPTACLE PANTRY	35		36						
20	1	600	1/2	12	LIGHT TERRACE	37		38	↓	↓	↓	↓	↓	↓
					SPACE	39		40	SPACES					
					↓	41		42	↓					

DEMAND LOAD : 30926 VA/240 = 129 AMPS
(SEE LOAD CALCULATION)

FEEDER : 3 # 3/0 THWN - 2" COND.
FED FROM : SERVICE.

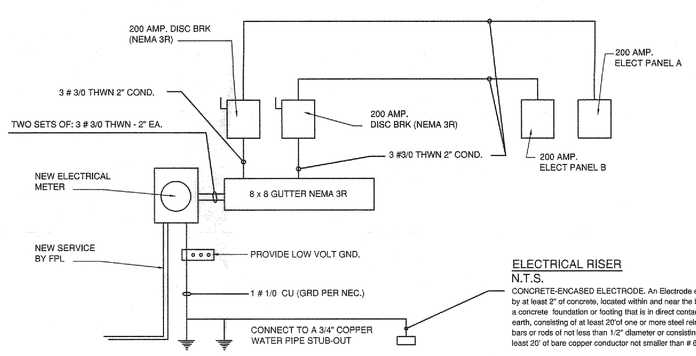

ELECTRICAL RISER
N.T.S.
CONCRETE-ENCASED ELECTRODE. An Electrode encased by at least 2" of concrete, located within and near the bottom of a concrete foundation or footing that is in direct contact w/ the earth, consisting of at least 20'of one or more steel reinforcing bars or rods of not less than 1/2" diameter or consisting of at least 20' of bare copper conductor not smaller than # 6 AWG.

ELECTRODE RISER
N.T.S.

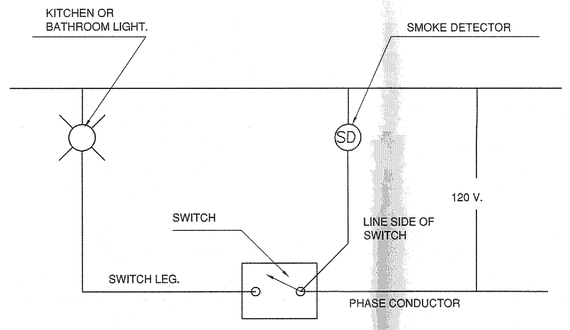

NOTE:

SMOKE DETECTOR SHALL BE HARDWIRED (110 VOLT TYPE) TO A NON-SWITCHABLE KITCHEN OR BATHROOM LIGHTING CIRCUIT, WITH BATTERY BACK-UP AND SHALL NOT BE CONNECTED ONTO THE LOAD SIDE OF GROUND FAULT CIRCUIT INTERRUPTER. ALL SMOKE DETECTORS WITHIN EACH UNIT SHALL BE INTERCONNECTED.

SMOKE DETECTOR CONNECTION DETAIL
N.T.S.

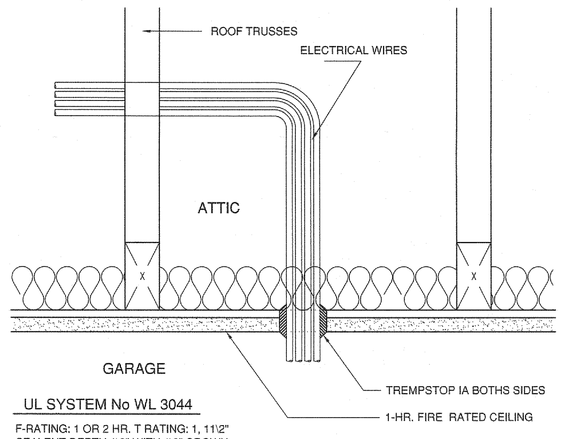

UL SYSTEM No WL 3044

F-RATING: 1 OR 2 HR. T RATING: 1, 11\2"
SEALENT DEPTH 1\2" WITH 1\2" CROWN,
SEALANT TO BE MANUFACTURED BY
TREMSTOP IA

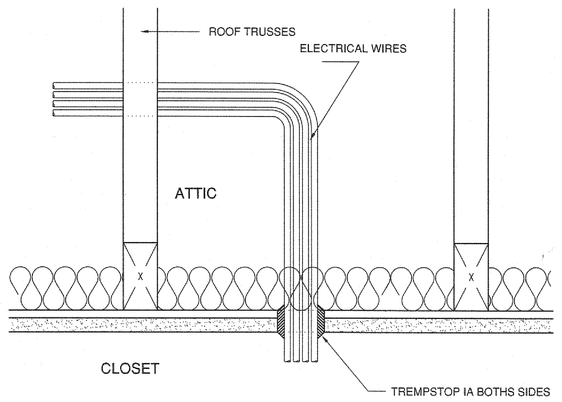

UL SYSTEM No WL 3044
N.T.S.

BELLÓN architecture
13131 S.W. 132 STREET
SUITE 104
MIAMI, FLORIDA 33186
T. (305) 278-7776
F. (305) 278-7473
WWW.BELLONMILANES.COM
AA-26002616
ARCHITECTURE
LAND PLANNING
INTERIORS
CONSTRUCTION MANAGEMENT

CONSULTANTS

A CUSTOM RESIDENCE FOR:
Mr. AND MRS. R. SANCHEZ / NOLAN RODRIGUEZ
13940 OLD CUTTLER ROAD
PALMETTO BAY, FLORIDA

MARK	DATE	DESCRIPTION

PROJECT No.
DRAWN BY:
CHECKED BY:
DATE:

STATE OF FLORIDA
LEOPOLDO BELLÓN
REGISTERED ARCHITECT
LEOPOLDO BELLÓN, AIA (AR-873

SHEET TITLE
ELECTRICAL NOTES

E-2

SHEET OF

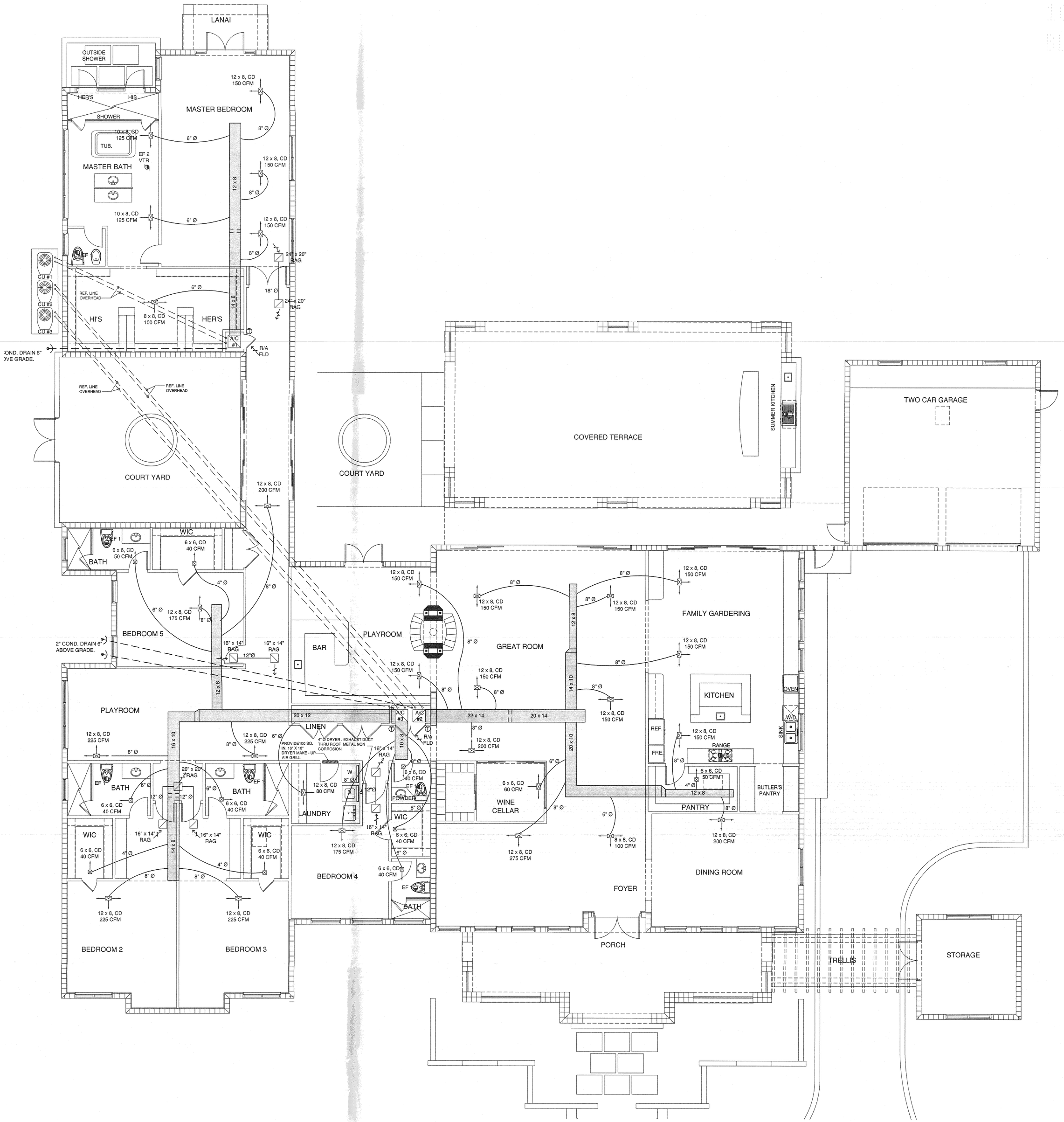

AIR CONDITIONING GENERAL NOTES

1. SCOPE OF WORK:

A. INSTALL A COMPLETE NEW HVAC SYSTEM AS SHOWN ON DRAWINGS.

2. EQUIPMENT SHALL HAVE CAPACITIES REQUIRED TO OBTAIN A SUITABLE OPERATING BALANCE BETWEEN ASSOCIATED ITEMS OF EQUIPMENT. ALL DAMPERS AND CONTROLS SHALL BE ADJUSTED TO OBTEIN THE REQUIRED CAPACITIES UNDER ACTUAL OPERATING CONDITIONS OF EACH ITEMS OF EQUIPMENT SHALL NOT EXCEED THE RATED MOTOR HORSEPOWER. BALANCED CAPACITIES BE EQUAL TO THOSE SCHEDULED AT DESIGN CONDITIONS.

3. COOLING SYSTEM AREA DESIGNED FOR 78F D8 INSIDE . CONDITIONS WITH OUTSIDE AIR TEMPERATURE OF 91F D.B. 79F W.B. HEATING IS DESIGNED TO MAINTAIN MINIMUM INSIDE TEMPERATURES OF 72F D.B. WITH AND OUTSIDE TEMPERATURE OF 45F D.B.

4. AIR DISTRIBUTION DEVICES SHALL BE CONSTRUCTED OF ALLUMINIUM, AS MANUFACTURED BY TITUS. CEILING DIFFUSER TO BE TITUS SERIES 200-F5, W/ OPPOSED BLADE DAMPER, AND SUPPLY AIR REGISTERS TO BE MODEL 271-FL EXPOSED GRILLAGE SHALL BE PAINTED OF SAME COLOR OF THE CEILING OR WALL IN WICH IT IS LOCATED IN AND ALL SCREWS SHALL BE OF THE COUNTERSUNK TYPE ALSO PAINTED AS GRILLAGE.

5. CONSTRUCT AIR CONDITIONING DUCTWORK FROM ONE INCH THICK FOR DUCTWORK THAT RUNS BETWEEN FLOORS AND ONE HALF INCH THICK FOR DUCTWORK THAT RUNS WITHIN ATTIC SPACE STANDARD WEIGHT, FIBROUS GLASS DUCTBOARD. FABRICATED, SEAL AND INSTALLED PER LATEST SMACNA FIBROUS GLASS DUCT MANUAL RECOMMENDATIONS. DUCT SIZES NOTED ARE CLEAR INSIDE DIMENSIONS PROVIDE ALL ELBOWS WITH DOUBLE THICKNESS TURNING VANES AT ALL BRANCH DUCT TAKE-OFFS AS REQUIRED FOR PROPER AIR BALANCING.

6. AIR COOLED CONDENSING UNITS TO BE AS SCHEDULE, OR APPROVED EQUAL PROVIDED EACH UNIT WITH ANTI- CYCLING DEVICE OR TIMER, HIGH AND LOW PRESSURE CONTROLLERS, AND FILTER DRIER.

7. FANCOIL UNIT TO BE AS SCHEDULE, OR APPROVED EQUAL COORDINATE WITH ELECTRICIAN TO CONNECT MULTI-SPEED FAN MOTOR TO PROPER SPEED TAPS TO DELIVER SCHEDULED AIR QUANTITIES, AGAINST SYSTEMS RESISTANCE AS INSTALLED DURING THE COOLING MODE; AND TO DELIVER MINIMUM SUPPLY AIR CFM, AS RECOMMENDED BY UNIT MANUFACTURER DURING THE HEATING MODE.

8. INSULATE REFRIGERANT SUCTION PIPE WITH 3/4 INCH THICK ARMAFLEX FINISH INSULATION EXPOSED TO WEATHER WITH TWO COATS OF GLASSFAB AND MASTIC. PROVIDE 5" PVC JACKET FOR ALL REFRIGERANT LINES UNDER GROUND FLOOR.

9. COORDINATE ALL WORK WITH OTHER TRADES INVOLVED, THIS INCLUDES WALL AND ROOF PENETRATIONS AND REQUIERED ELECTRICAL SERVICE AND CONTROL WIRING. PLUMBER IS TO PROVIDE A MINIMUM 1-1/4 INCH CONDENSATE TRAP SEAL AT EACH FANCOIL UNIT, PIPE TO OUTSIDE OF HOUSE 6" ABOVE FINISHED GRADE.

10. THERMOSTAT SHALL HAVE A MAXIMUM HEATING MODE TEMPERATURE SETTING OF 78F AND A MINIMUM COOLING MODE TEMPERATURE SETTING OF 70F . IT SHALL BE ADJUSTABLE TO PROVIDE A TEMPERATURE OF UP TO 10F BETWEEN FULL HEATING AND FULL COOLING. HEATING AND COOLING TO BE NON-CONCURRENT THERMOSTAT TO HAVE REQUIRED STAGES OF COOLING AND HEATING FOR COMPATIBILITY WITH AIR CONDITIONING EQUIPMENT PROVIDE.

11. THE AIR FLOW AT EACH SUPPLY OUTLET SHOWN ARE PRELIMINARY AND FINAL FLOW AT EACH OUTLET SHALL BE DETERMINED BY DEGREE OF COMFORT TEMPERATURE.

MECHANICAL GROUND FLOOR PLAN

SCALE: 1/8" =1'-0"

BELLÓN architecture

13131 S.W. 132 STREET
SUITE 104
MIAMI, FLORIDA 33186

T. (305) 278-7776
F. (305) 278-7473
WWW.BELLONMIAMI.COM
AA-26002616

ARCHITECTURE
LAND PLANNING
INTERIORS
CONSTRUCTION MANAGEMENT

CONSULTANTS

A CUSTOM RESIDENCE FOR:

Mr. AND MRS. R. SANCHEZ / NOLAN RODRIGUEZ

13940 OLD CUTTLER ROAD
PALMETTO BAY, FLORIDA

MARK	DATE	DESCRIPTION

PROJECT No. LB269
DRAWN BY: JP / AM
CHECKED BY: LB
DATE: 06-18-14

STATE OF FLORIDA · LEOPOLDO BELLON · AR8737 · REGISTERED ARCHITECT

LEOPOLDO BELLON, AIA (AR-8737)

SHEET TITLE

MECHANICAL GROUND FLOOR PLAN

M-1

SHEET OF

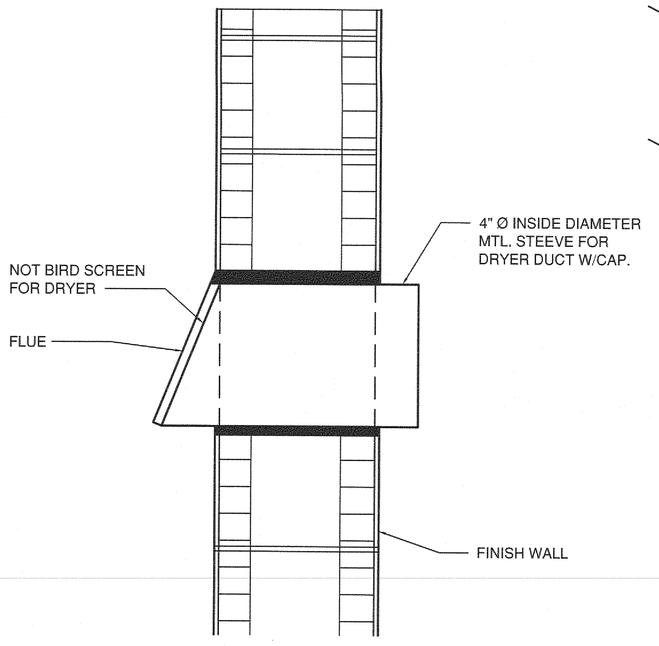

DRYER VENT TERMINATION DETAIL
N.T.S.

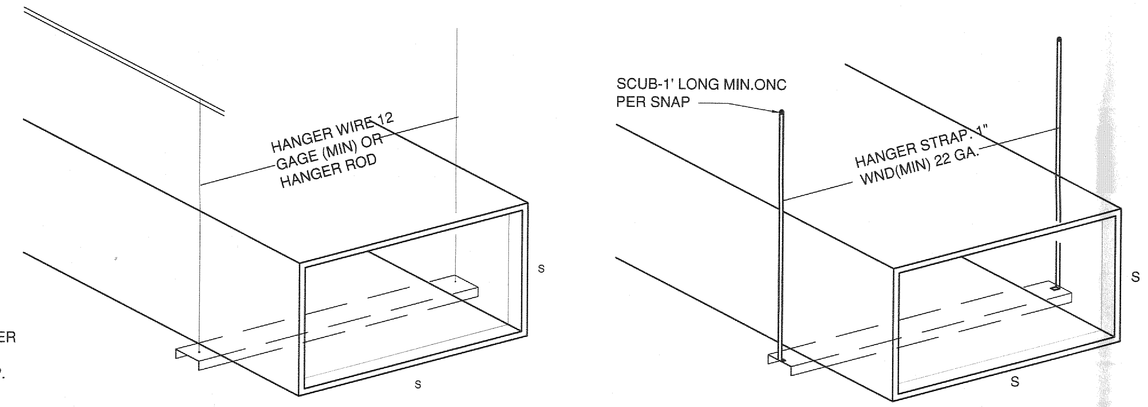

HANGER AND SUPPORTS

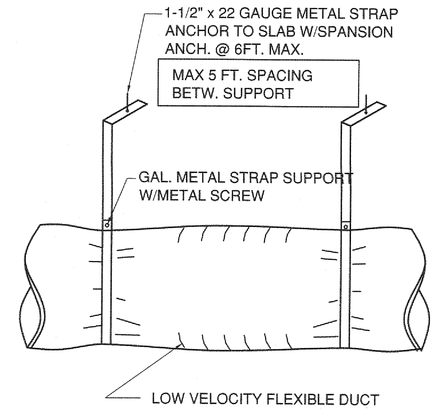

FLEXIBLE DUCT SUPPORT DETAIL
N.T.S.

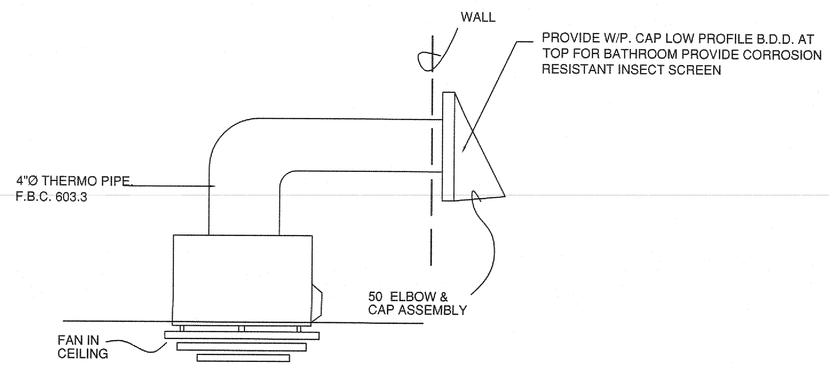

TYPICAL ROOF CAP DETAIL TOILET EXH THRU WALL.
NTS

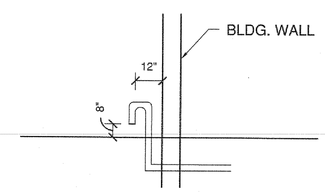

CONDENSATE WATER DISCHARGE DETAIL
N.T.S.

HVAC DESIGN REQUIRES:	YES	NO
DUCT SMOKE DETECTOR		X
FIRE DAMPER(S)		X
SMOKE DAMPER(S)		X
FIRE RATED ENCLOSURE		X
FIRE RATED ROOF CEILING ASSEMBLY		X
FIRE STOPPING		X
SMOKE CONTROL		X
PROGRAMMABLE THERMOSTAT	X	

STANDARD 3" WIDE HANGERS

HANGER EXTENSION TO BE THE SUM OF THE DISTANCES BETWEEN THE HANGING WIRES AND THE DUCT SIZE, ID (SMACNA)

DUCT SIZE, INCHES	MAXIMUN HANGER SPACING
48: WIDE OR WRATER	4 FT.
LESS THAN 48" WIDE AND LESS THAN 48" DEEP	6 FT.
WIDTH BETWEEN 28" & 48" AND GREATER THAN 16" DEEP	6 FT.
LESS THAN 29" WIDE AND 16" DEPTH OR LESS	8 FT.

CHANNEL SECTION

IF TOTAL EXTENSION IS NOT GREATER THAN:	MINIMUN CHANNEL GAUGE	MINIMUN CHANNEL PROFILE
6"	24	3" x 1.5"
18"	22	3" x 2"
30"	18	3" x 2"

USE OF 2" WIDE

22 GAUGE 2' x 1.5" HANGER MAY BE SUBSTITUTED FOR 3" HANGER FOR DUCTS WITH WIDTHS NOT OVER 48" AND DEPTHS NOT OVER 24" PROVIDED THAT NOT MORE THAN ONE JOINT OCCURS BETWEEN HANGER AND THAN MAXIMUM HANGER SPACING 4 FT. EXCEPTION: WHEN DUCT PERIMETER IS 80" OR LESS AND DOES NOT REQUIRE REINFORCEMENT TWO JOINTS ARE PERMITTED BETWEEN HANGERS.

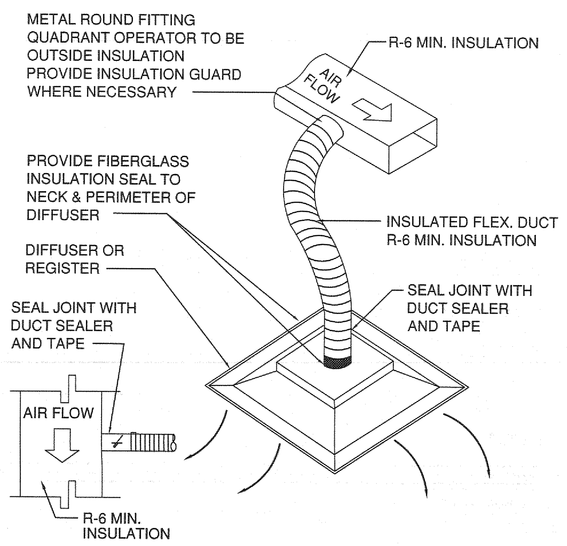

FLEXIBLE DUCT CONNECTION DETAIL
N.T.S.

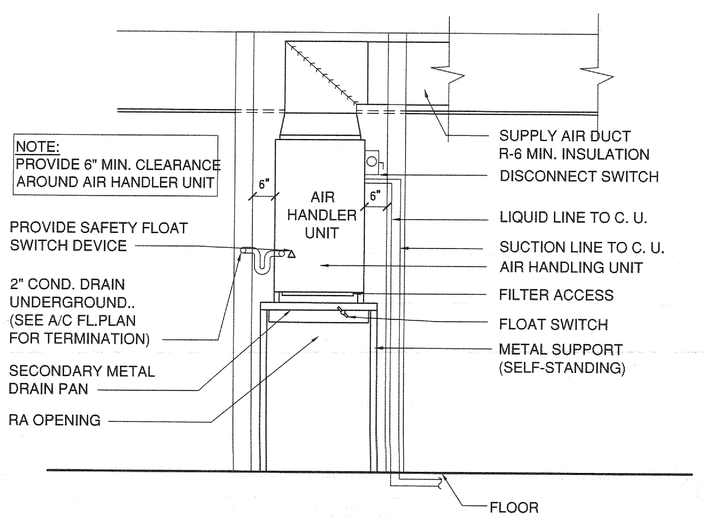

AIR CONDITIONING CLOSET
N.T.S.

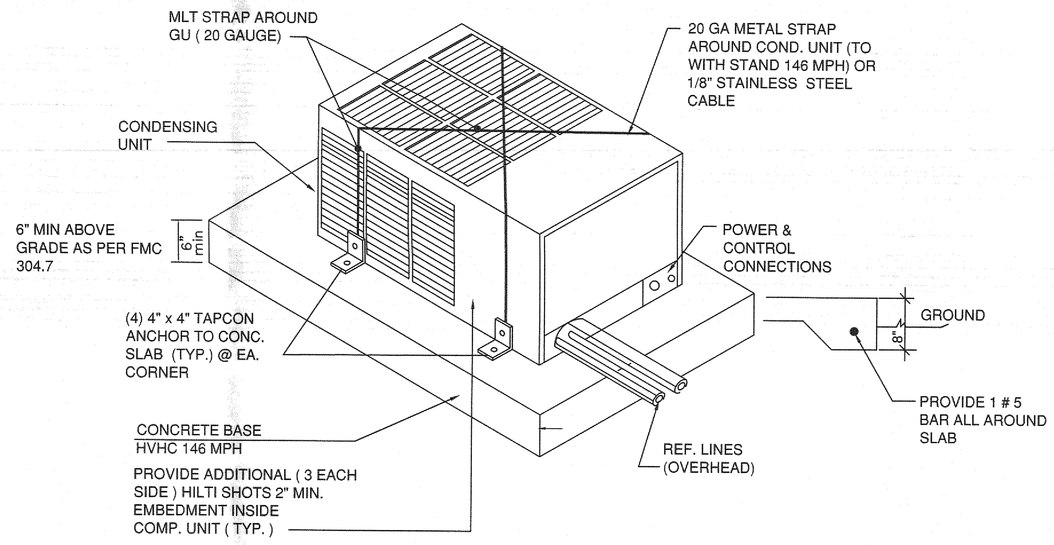

CONDENSING UNIT MOUNTING DETAIL
N.T.S.

EXHAUST FAN SCHEDULE

EF-1
SHALL BE BROAN MODEL No. 770 @ 120V/1 PH/60 HZ. 1/4" SP 50 CFM W/BACKDRAFT DAMPER.

EF-2
SHALL BE BROAN MODEL No. 676 @ 120V/1 PH/60 HZ 1/4" SP 110 CFM W/BACKDRAFT DAMPER.

EF-3
SHALL BE BROAN MODEL No. 502 @ 120V/1 PH/60 HZ 1/4" SP 270 CFM W/BACKDRAFT DAMPER.

INSTALLATION OF ALL EXTERIOR AIR CONDITIONING CONDENSING UNITS, AT GROUND LEVEL, IN SINGLE FAMILY DUPLEX AND FEE SIMPLE TOWNHOUSES IN UNINCORPORATED MIAMI-DADE COUNTY SHALL BE CONCRETE SLAB, ON THE INSIDE OF THE UNIT, WITH ANA ANCHOR BOLT OF 500 POUNDS MINIMUM PULL OF CAPACITY

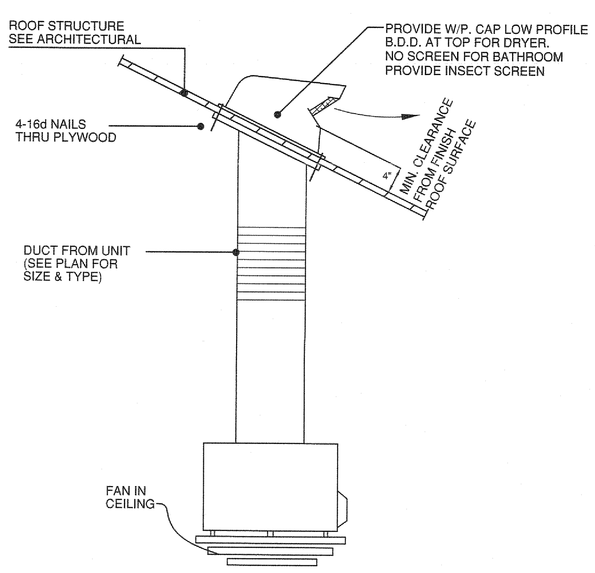

TYPICAL TOILET EXH. THRU ROOF CAP DETAIL
N.T.S.

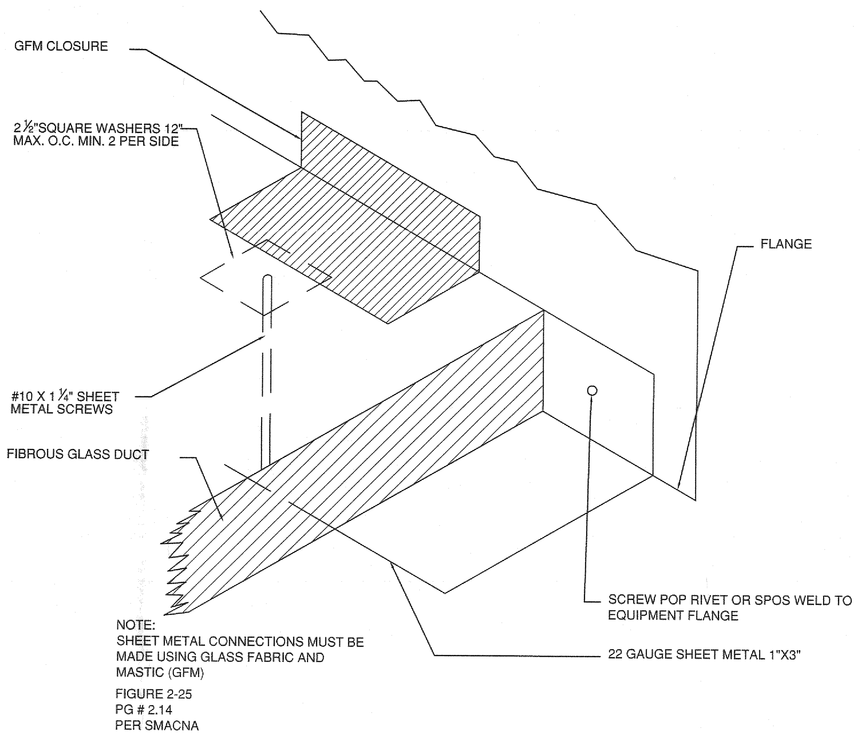

NOTE:
SHEET METAL CONNECTIONS MUST BE MADE USING GLASS FABRIC AND MASTIC (GFM)
FIGURE 2-25
PG # 2.14
PER SMACNA

SHEET METAL AND EQUIPMENT CONNECTION DETAIL
N.T.S.

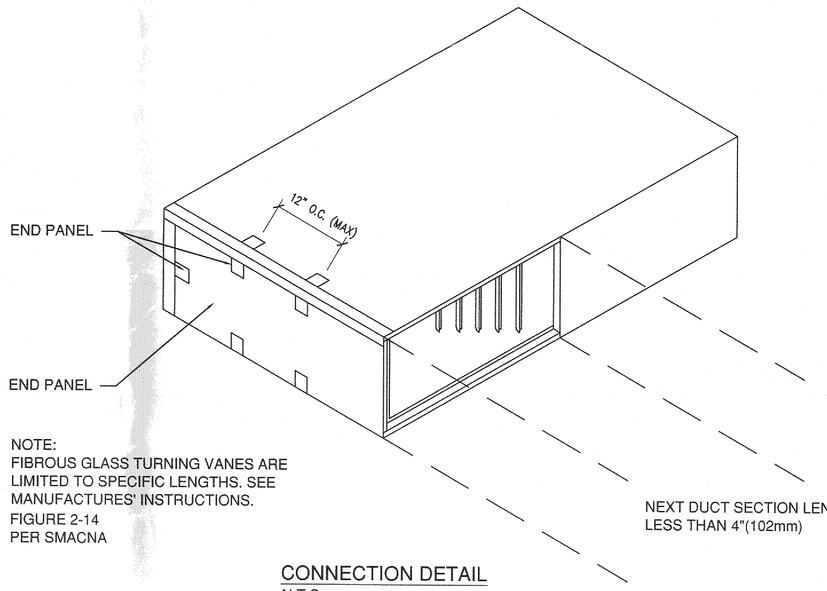

NOTE:
FIBROUS GLASS TURNING VANES ARE LIMITED TO SPECIFIC LENGTHS. SEE MANUFACTURES' INSTRUCTIONS.
FIGURE 2-14
PER SMACNA

CONNECTION DETAIL
N.T.S.

SPLIT SYSTEM SCHEDULE

UNIT NO.	MASTER BEDROOM UNIT # 1	FAMILY GREAT UNIT # 2	BEDROOMS UNIT #3
TOTAL CAPACITY BTU/HR	24,000	51,400	51,400
SENS CAPACITY BTU/HR	17,500	44,500	44,500
CFM SUPPLY	800	2,000	2,000
HEATER KW	5	10	10
ESP-IN WG.	0.30	0.30	0.30
TEMP. AIR ENT. COIL DB/WB	80/67	80/67	80/67
C.U. FLA	12.6	28.9	28.9
VOLTAGE	1-60-240	1-60-240	1-60-240
MANUFACTURER	TRANE	TRANE	TRANE
AHU MODEL	TAM8A024	TAM8A060	TAM8A060
C.U. MODEL	4TTV024A	4TTV060A	4TTV060A
SEER	18.0	18.0	18.0
REF. LIQUID/SUCTION	5/16" - 3/4"	3/8" - 1 1/8"	3/8" - 1 1/8"

-MIN. DUCT INSULATION SHALL BE R-6 FOR A/C DUCT IN NON AIR CONDITIONING SPACES

-PROVIDE PROGRAMMABLE THERMOSTAT

BELLÓN architecture
13131 S.W. 132 STREET
SUITE 104
MIAMI, FLORIDA 33186
T. (305) 278-7776
F. (305) 278-7473
WWW.BELLONMIAMI5.COM
AA-26002616
ARCHITECTURE
LAND PLANNING
INTERIORS
CONSTRUCTION MANAGEMENT

CONSULTANTS

A CUSTOM RESIDENCE FOR:
Mr. AND MRS. R. SANCHEZ / NOLAN RODRIGUEZ
13940 OLD CUTTLER ROAD
PALMETTO BAY, FLORIDA

MARK	DATE	DESCRIPTION

PROJECT No. LB269
DRAWN BY: JP / AM
CHECKED BY: LB
DATE: 06-18-14

STATE OF FLORIDA
LEOPOLDO BELLON
REGISTERED ARCHITECT
LICENSE No. AR-0737

LEOPOLDO BELLON, AIA/AR-0737

SHEET TITLE
MECHANICAL DETAILS PLAN
M-2
SHEET OF

PLUMBING GENERAL NOTES :

1. ALL WORK AND MATERIAL SHALL BE IN ACCORDANCE WITH THE FLORIDA BUILDING CODE 2014, LOCAL AND ANY OTHER PERTAINING CODES THAT APPLY.
2. THE CONTRACTOR SHALL PROVIDE ALL MINOR ITEMS WHICH ARE OBVIOUSLY, AND REASONABLY NECESSARY TO COMPLETE THE INSTALLATION.
3. THE CONTRACTOR SHALL TAKE OUT PERMITS, PROCURE CERTIFICATES AND PAY ALL FEES CONNECTED THEREWITH.
4. BIDDERS SHALL VISIT THE SITE AND FAMILIARIZE THEMSELVES WITH ALL CONDITIONS SURROUNDING THE WORK.
5. THE CONTRACTOR SHOULD REFER TO THE DRAWING AND SPECIFICATIONS OF OTHER TRADES, AS SUCH ARE TO BE CONSIDERED PART OF THE PLUMBING CONTRACT DOCUMENTS.
6. DRAWINGS ARE DIAGRAMMATIC AND INTENDED TO SHOW THE APPROXIMATE LOCATION AND ARRANGEMENTS ONLY. PROVIDE ALL OFFSET, FITTING OR ACCESSORIES REQUIRED FOR A COMPLETE INSTALLATION.
7. ALL MATERIALS SHALL BE NEW AND OF THE BEST QUALITY NORMALLY USED FOR THE PURPOSE, OF TYPE AND MAKE CALLED FOR , OR APPROVED EQUAL.
8. THE CONTRACTOR SHALL BE A LICENSED MASTER PLUMBER.
9. THE ENTIRE INSTALLATION SHALL BE PERFORMED IN A FIRST -CLASS WORKMANLIKE MANNER.
10. PLUMING WORK SHALL NOT INTERFERE WITH CLEARANCE REQUIRED FOR GENERAL AND HVAC CONSTRUCTIONS. INSTALLED PLUMBING WORK WHICH INTERFERES WITH THE WORK OF OTHER CONTRACTOR SHALL BE CHANGED AT THE PLUMBING CONTRACTOR'S EXPENSE.

PLUMBING LEGEND

	SANITARY SEWER LINE
	VENT LINE
CD	CONDENSATE DRAINAGE LINE
CTG	CLEANOUT TO GRADE
WCO	WALL CLEANOUT
FD	FLOOR DRAIN
	COLD WATER (C.W.) LINE
	HOT WATER (H.W.) LINE
PT	PRESS. & TEMP. RELIEF LINE
	GATE VALVE
	CHECK VALVE
	PRESS. & TEMP. RELIEF VALVE
	UNION
	HOSE BIBB
VB	VACUUM BREAKER
VIV	VALVE IN VERTICAL
VTR	VENT THRU ROOF
AFF	ABOVE FINISHED FLOOR LEVEL
FE	FIRE EXTINGUISHER ON WALL BRACKET (2A-10BC)
FEC	FIRE EXTINGUISHER IN CABINET (2A-10BC)
FCO	FLOOR CLEAN OUT

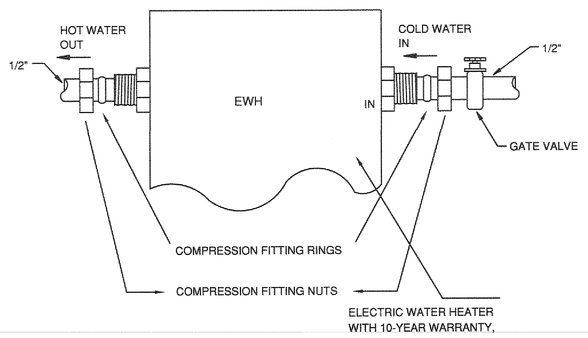

ELECTRONIC TANKLESS WATER HEATER DETAIL

N.T.S.

DIMENSIONS: 11.5 X 4.5 X 9IN
WEIGHT: 7 LBS
COVER: ABS
BODY: HEAT EXCHANGE: 100% STAINLESS STEEL
ELEMENT: 2 BRASS FLANGE/ COPPER
PIPE FITTINGS: 1/2"
ACTIVATION FLOW RATE: .25 GALLON
OPERATION PRESSURE: MIN 25 PSI, MAX 150

ENERGY EFFICIENCY..... 0.94

PLUMBING FIXTURE SCHEDULE

SYMBOL		FIXTURE TYPE	TRAP SIZE	C.W.	H.W.	DESCRIPTION
	WC	WATER CLOSET	3"	1|2"	-	
	LV	LAVATORY	1 1|2"	1|2"	1|2"	
	BT	BATHTUB	2"	1|2"	1|2"	w/ ANTI SCALED-VALVE
	SH	SHOWER	2"	1|2"	1|2"	w/ ANTI SCALED-VALVE
	KS	KITCHEN SINK	1 1|2"	1|2"	1|2"	w/ GARBAGE DISPOSAL
	DW	DISHWASHER	*	-	1|2"	DISCHARGE INTO GARBAGE DISPOSAL UNIT.
	WM	WASHING MACHI.	2"	1|2"	1|2"	

NOTE: ALL DRAIN PIPING UNDER SLAB SHALL BE 2" MIN.

ELECTRONIC TANKLESS W/ HEATER SCHEDULE

UNIT DESIGNATION	E.W.H.
MANUFACTURER	AMERICAN HEAT
MODEL No.	SUPER ADK-1
MAX. (KW) at 220V	11.8
VOLTS	220
MAX. (AMP) at 220V	58

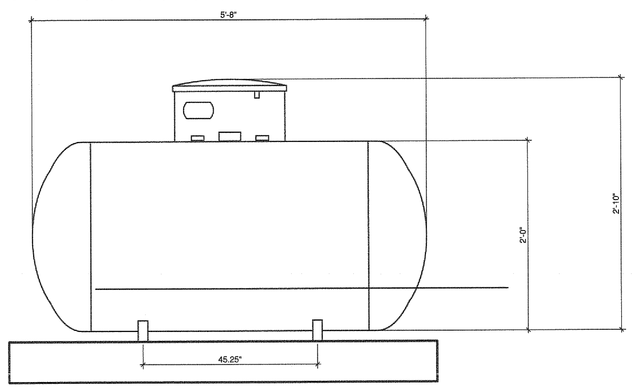

120 GALS GAS TANK DETAIL N.T.S.

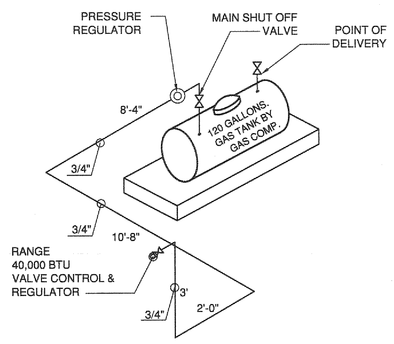

GAS RISER (PROPANE GAS)

N.T.S.

TOTAL BTU:	40,000 BTU.
LONGEST TOTAL RUN :	24'-0" LIN/FT.

NOTE:
GAS CONTRACTOR TO PROVIDE SHOP DRAWINGS FOR OWNER AND ARCHITECT APPROVAL AND VERIFY BTU FOR EACH EQUIPMENT

NOTE:
PROVIDE SHOOT-OFF VALVE AHEAD OF M.P. REGULATOR (TYP.)

PROPANE GAS NFPA-58 (2011 ED.)	
TABLE 402.4 (20)	POLYTHYLENE PLASTIC PIPE INLET PRESSURE = 10 PSI FOR UNDERGROUND OUTSIDE BLDG. TOTAL BTU = 40,000 LONGEST TOTAL RUN = 24' 0" L.F

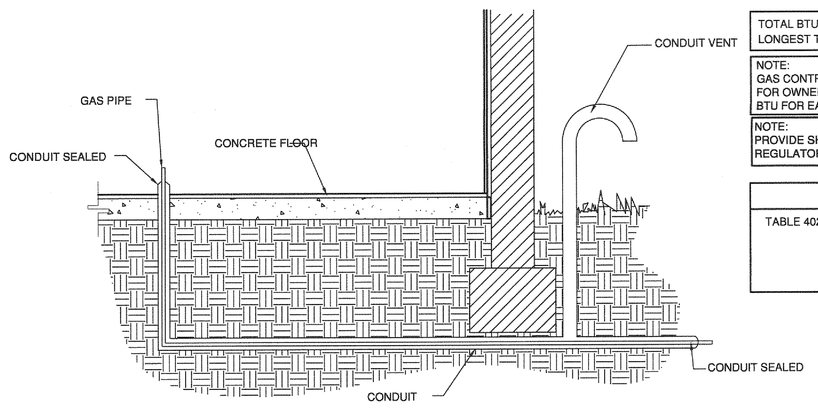

GAS PIPE UNDER SLAB INSTALLATION DETAIL

N.T.S.

1

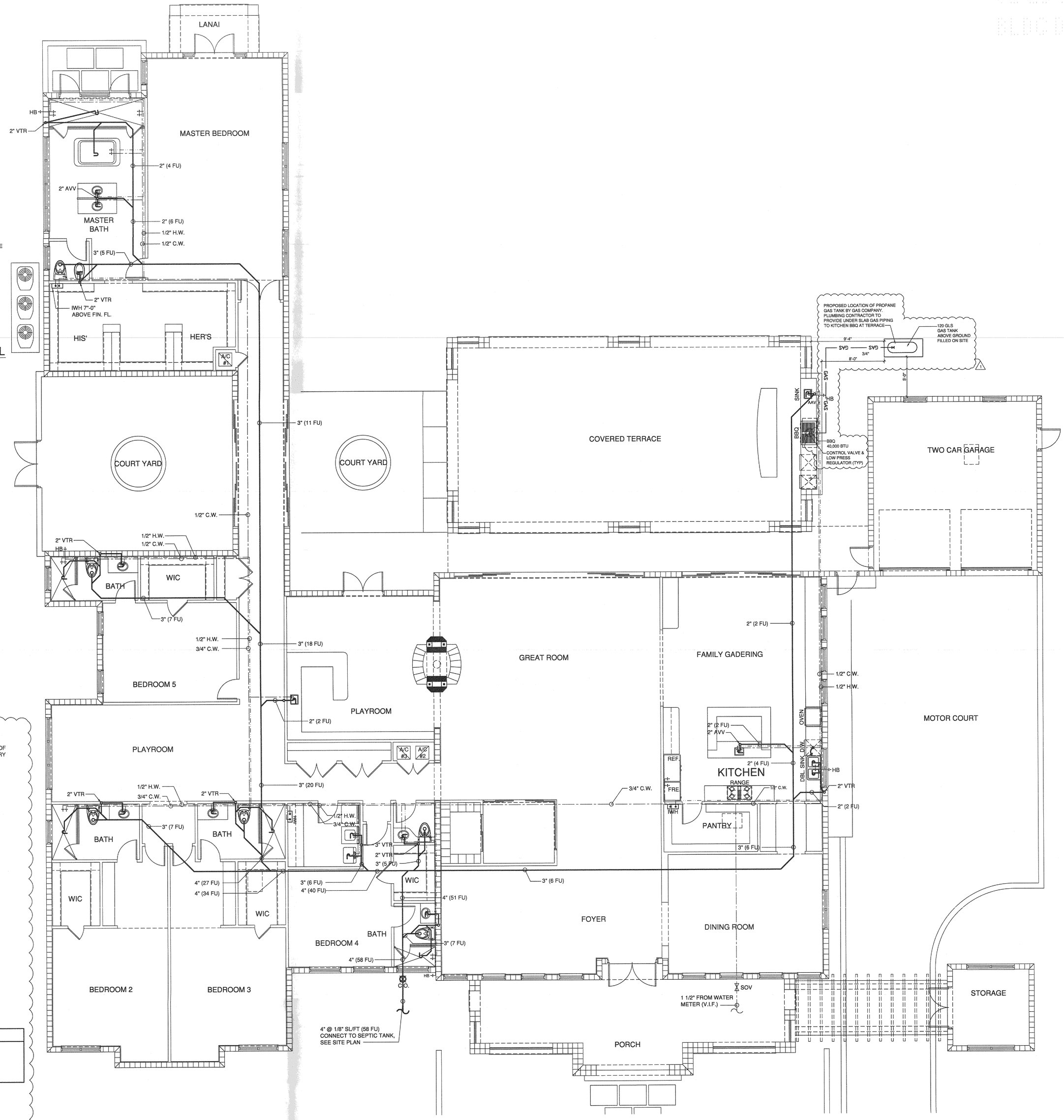

PLUMBING GROUND FLOOR PLAN

SCALE: 3/16" = 1'-0"

BELLÓN architecture
13131 S.W. 132 STREET
SUITE 104
MIAMI, FLORIDA 33186
T. (305) 278-7776
F. (305) 278-7473
WWW.BELLONMIAMI25.COM
AA-26002616
ARCHITECTURE
LAND PLANNING
INTERIORS
CONSTRUCTION MANAGEMENT

CONSULTANTS

A CUSTOM RESIDENCE FOR:

Mr. AND MRS. R. SANCHEZ / NOLAN RODRIGUEZ
13940 OLD CUTTLER ROAD
PALMETTO BAY, FLORIDA

MARK	DATE	DESCRIPTION
1	12-17-15	B.D.C

PROJECT No. LB269
DRAWN BY: JP / AM
CHECKED BY: LB
DATE: 06-18-14

STATE OF FLORIDA LEOPOLDO BELLON ARCHITECT AR0008737

LEOPOLDO BELLON, AIA (AR-8737)

SHEET TITLE
PLUMBING PLAN

P-1

SHEET OF

PLUMBING GENERAL NOTES :

1. ALL WORK AND MATERIAL SHALL BE IN ACCORDANCE WITH THE FLORIDA BUILDING CODE 2010, LOCAL AND ANY OTHER PERTAINING CODES THAT APPLY.
2. THE CONTRACTOR SHALL PROVIDE ALL MINOR ITEMS WHICH ARE OBVIOUSLY, AND REASONABLY NECESSARY TO COMPLETE THE INSTALLATION.
3. THE CONTRACTOR SHALL TAKE OUT PERMITS, PROCURE CERTIFICATES AND PAY ALL FEES CONNECTED THEREWITH.
4. BIDDERS SHALL VISIT THE SITE AND FAMILIARIZE THEMSELVES WITH ALL CONDITIONS SURROUNDING THE WORK.
5. THE CONTRACTOR SHOULD REFER TO THE DRAWING AND SPECIFICATIONS OF OTHER TRADES, AS SUCH ARE TO BE CONSIDERED PART OF THE PLUMBING CONTRACT DOCUMENTS.
6. DRAWINGS ARE DIAGRAMMATIC AND INTENDED TO SHOW THE APPROXIMATE LOCATION AND ARRANGEMENTS ONLY. PROVIDE ALL OFFSET, FITTING OR ACCESSORIES REQUIRED FOR A COMPLETE INSTALLATION.
7. ALL MATERIALS SHALL BE NEW AND OF THE BEST QUALITY NORMALLY USED FOR THE PURPOSE, OF TYPE AND MAKE CALLED FOR , OR APPROVED EQUAL.
8. THE CONTRACTOR SHALL BE A LICENSED MASTER PLUMBER.
9. THE ENTIRE INSTALLATION SHALL BE PERFORMED IN A FIRST -CLASS WORKMANLIKE MANNER.
10. PLUMING WORK SHALL NOT INTERFERE WITH CLEARANCE REQUIRED FOR GENERAL AND HVAC CONSTRUCTIONS. INSTALLED PLUMBING WORK WHICH INTERFERES WITH THE WORK OF OTHER CONTRACTOR SHALL BE CHANGED AT THE PLUMBING CONTRACTOR'S EXPENSE.

PLUMBING LEGEND

	SANITARY SEWER LINE
	VENT LINE
CD	CONDENSATE DRAINAGE LINE
CTG	CLEANOUT TO GRADE
WCO	WALL CLEANOUT
FD	FLOOR DRAIN
	COLD WATER (C.W.) LINE
	HOT WATER (H.W.) LINE
PT	PRESS. & TEMP. RELIEF LINE
	GATE VALVE
	CHECK VALVE
	PRESS. & TEMP. RELIEF VALVE
	UNION
	HOSE BIBB
VB	VACUUM BREAKER
VIV	VALVE IN VERTICAL
VTR	VENT THRU ROOF
AFF	ABOVE FINISHED FLOOR LEVEL
FE	FIRE EXTINGUISHER ON WALL BRACKET (2A-10BC)
FEC	FIRE EXTINGUISHER IN CABINET (2A-10BC)
FCO	FLOOR CLEAN OUT

PLUMBING FIXTURE SCHEDULE

SYMBOL		FIXTURE TYPE	TRAP SIZE	C.W.	H.W.	DESCRIPTION
	WC	WATER CLOSET	3"	1|2"	-	
	LV	LAVATORY	1|2"	1|2"	1|2"	
	BT	BATHTUB	2"	1|2"	1|2"	w/ ANTI SCALED-VALVE
	SH	SHOWER	2"	1|2"	1|2"	w/ ANTI SCALED-VALVE
	KS	KITCHEN SINK	1|2"	1|2"	1|2"	w/ GARBAGE DISPOSAL
	DW	DISHWASHER	*	-	1|2"	DISCHARGE INTO GARBAGE DISPOSAL UNIT.
	WM	WASHING MACHI.	2"	1|2"	1|2"	

NOTE: ALL DRAIN PIPING UNDER SLAB SHALL BE 2" MIN.

ELECTRONIC TANKLESS W/ HEATER SCHEDULE

UNIT DESIGNATION	E.W.H.
MANUFACTURER	AMERICAN HEAT
MODEL No.	SUPER ADK-1
MAX. (KW) at 220V	11.8
VOLTS	220
MAX. (AMP) at 220V	58

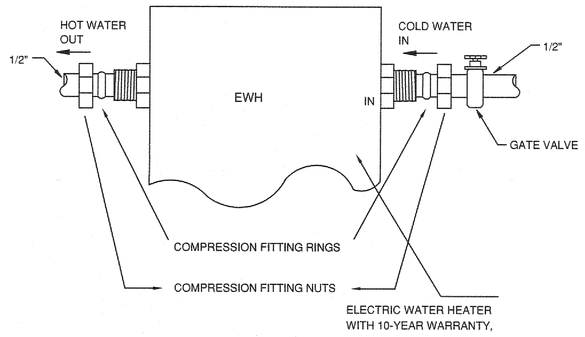

ELECTRONIC TANKLESS WATER HEATER DETAIL

N.T.S.

DIMENSIONS: 11.5 X 4.5 X 9IN
WEIGHT: 7 LBS
COVER: ABS
BODY/ HEAT EXCHANGE: 100% STAINLESS STEEL
ELEMENT: 2 BRASS FLANGE/ COPPER
PIPE FITTINGS: 1/2"
ACTIVATION FLOW RATE: .25 GALLON
OPERATION PRESSURE: MIN 25 PSI, MAX 150

ENERGY EFFICIENCY..... 0.94

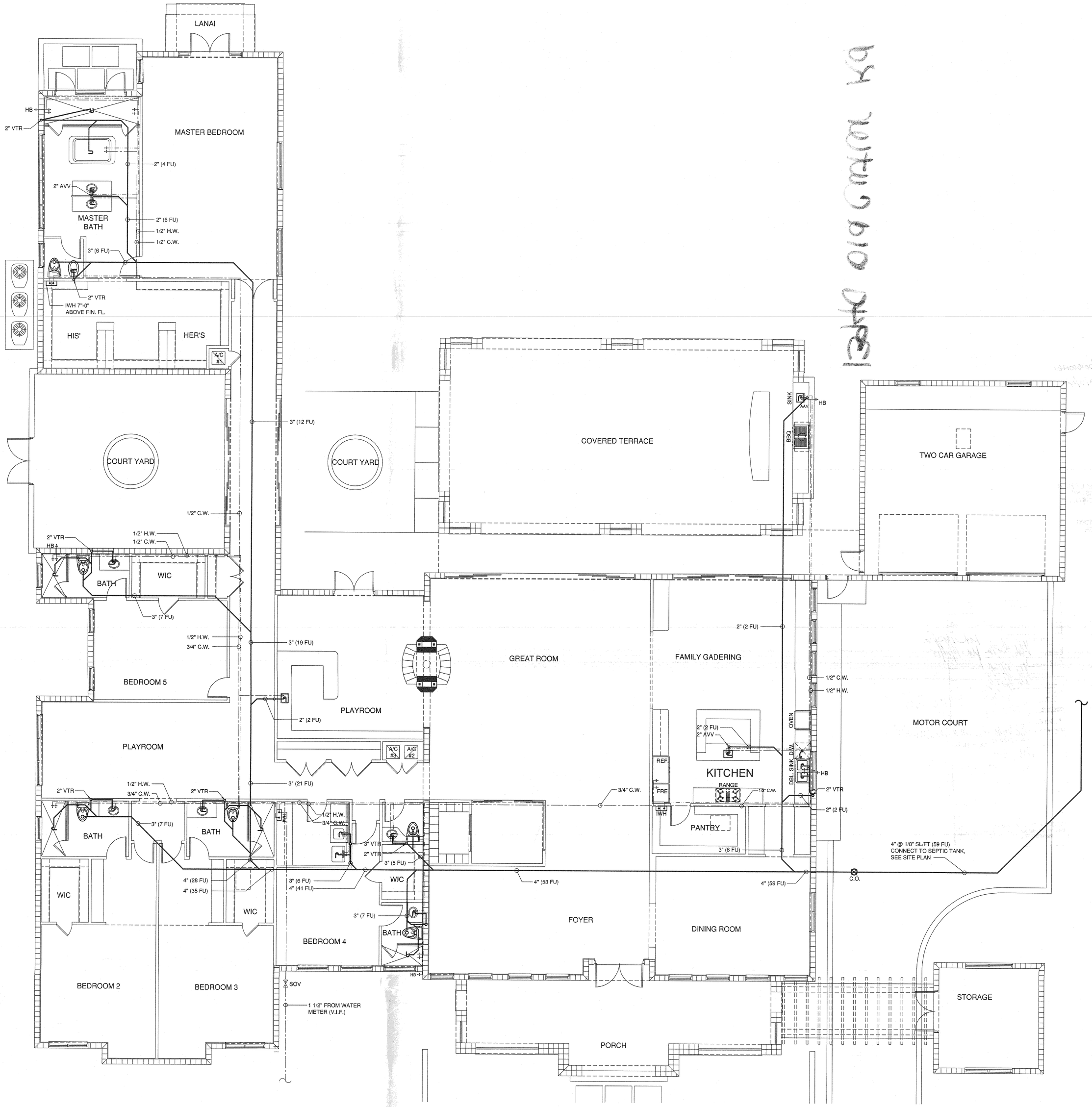

PLUMBING GROUND FLOOR PLAN

SCALE: 3/16" = 1'-0"

13940 old cutler rd

BELLO architectu
13131 S.W. 132 STR
SUITE 104
MIAMI, FLORIDA 331
T. (305) 278-7776
F. (305) 278-7473
WWW.BELLONMILANES.
AA-26002616
ARCHITECTURE
LAND PLANNING
INTERIORS
CONSTRUCTION MANAGE

CONSULTANTS

A CUSTOM RESIDENCE FOR:

Mr. AND MRS. R. SANCHEZ / NOLAN RODRIGUEZ

13940 OLD CUTTLER ROAD
PALMETTO BAY, FLORIDA

MARK	DATE	DESCRIPT

PROJECT No. LB269
DRAWN BY: JP / AM
CHECKED BY: LB
DATE: 06-18-14

STATE OF FLORIDA LEOPOLDO BELLON REGISTERED ARCHITECT AR8727

LEOPOLDO BELLON, AIA (AR-87

SHEET TITLE
PLUMBING PLAN

P-1

SHEET OF

BLD-2015-7898
13940 Old Cutter Rd

Tray 2015

13940 Old Cutter Rd

DERM
FINAL REVIEW
APPROVAL
DEPARTMENT OF ENVIRONMENTAL RESOURCES MANAGEMENT
COPY REVIEWED (PERMIT): Arborist 15 ar
SIGNATURE: [signature] DATE: 3/3/16

SMOKE DETECTORS REQUIRED IN
ALL NEW AND EXISTING
BEDROOMS FBC 2014R314

ALL RECESSED LIGHTING
FIXTURES SHALL BE
IC-AC RATED

OFFICE COPY

New Sheets

VILLAGE OF PALMETTO BAY
THIS COPY OF PLAN MUST BE AVAILABLE ON BUILDING SITE FOR INSPECTOR

SECTION	BY	DATE	TO
ZONING P & Z	MM	4/28/16	MM 7/15/16
LANDSCAPING	MM	4/28/16	
PUBLIC WORKS	DC	4/28/16	DC 5/3/16 OK 5/2/16
PUBLIC WORKS	DC	5/3/16	DC 5/3/16
ENVIRONMENTAL	DMC	4/18/16	DMC 3/8/16 DMC (11/24/15)
ELECTRIC	MC	1/25/16	11/24/15
MECHANICAL	MC	4-5-16	10/29/15 1/25/16 3/4/16
PLUMBING			
ELECTRIC			
BUILDING			
FIRE			

Subject to compliance with the Village of Palmetto Bay Land Development Code, approval of this plan does not assume the responsibility of the Village of Palmetto Bay for any violation of the Code.

NOTICE: In addition to the requirements of these permits there may be additional restrictions applicable to this in the public record of this county and village.

NEW SHEETS SP-1 SP-1.1 LP-1 ST-1 A-00 A-1 A-2 A-3 A-4 A-5 A-6 P-1 A-7 E-1 E-2 1/19/16

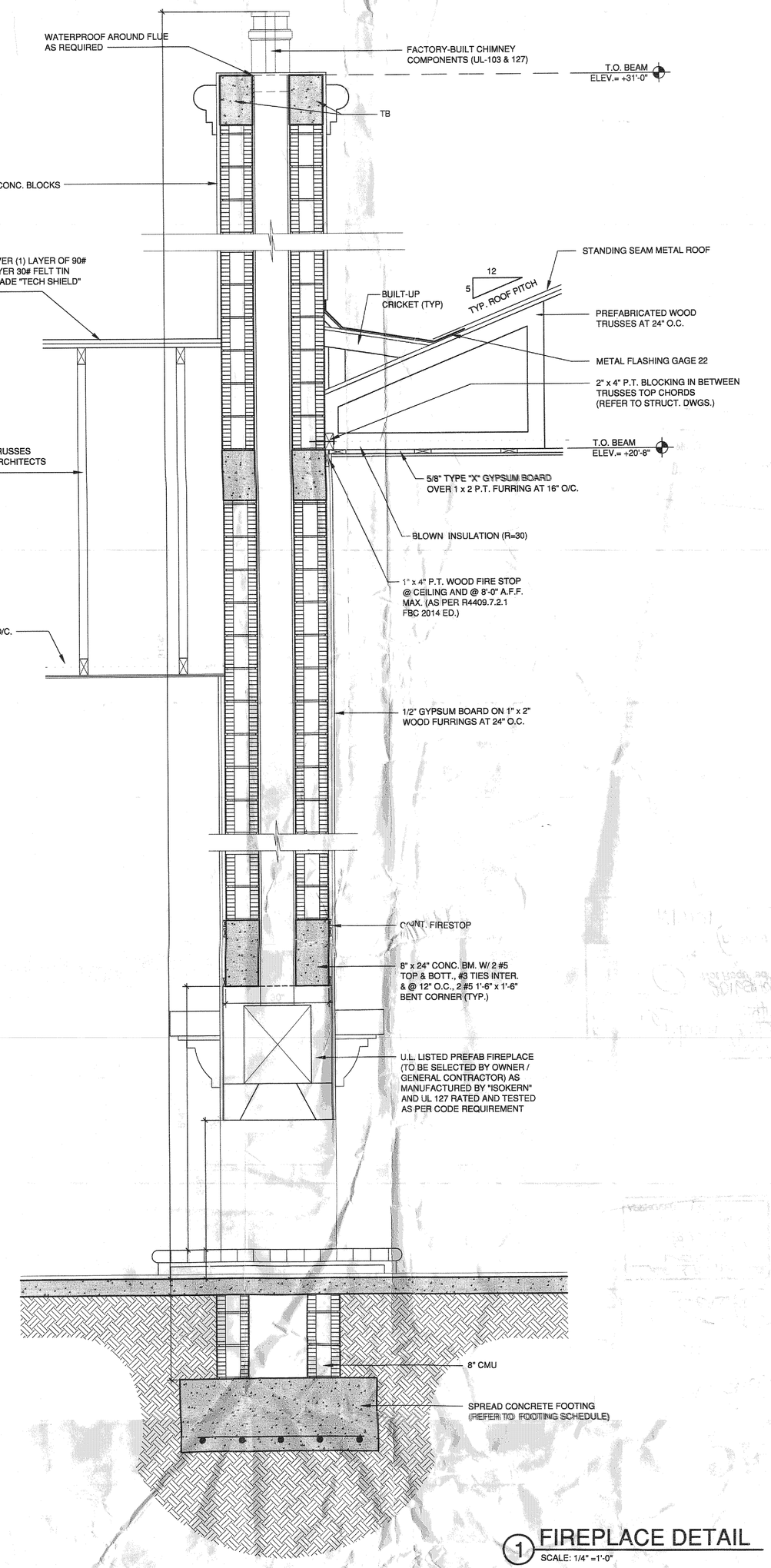

1 FIREPLACE DETAIL
SCALE: 1/4" =1'-0"

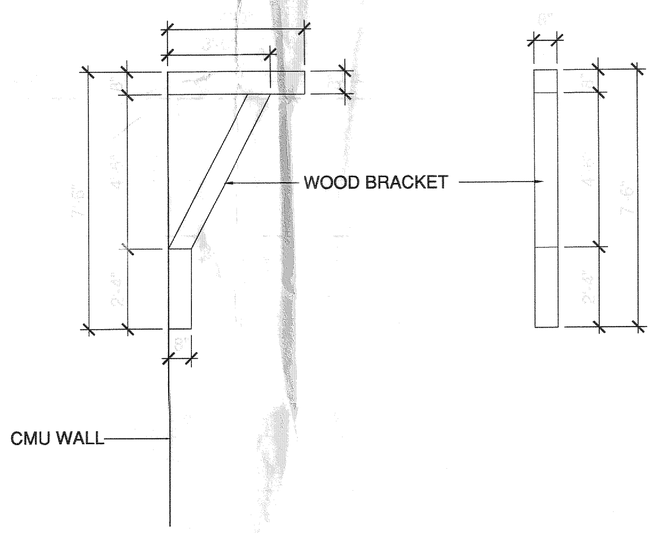

3 WOOD BRACKET DETAIL
SCALE: 1" =1'-0"

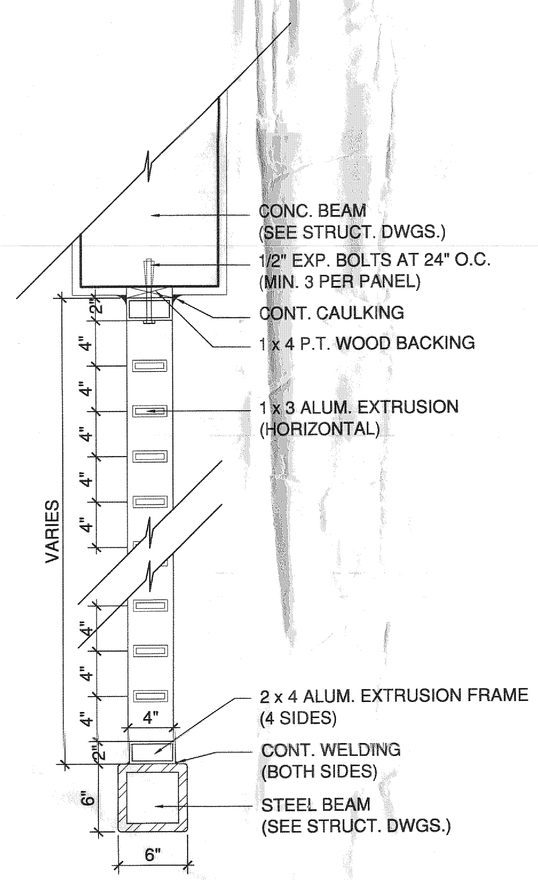

2 TYPICAL ALUM. GRILLE DETAIL
SCALE: 1" =1'-0"

BELLON architecture

13131 S.W. 132 STREET
SUITE 104
MIAMI, FLORIDA 33186

T. (305) 278-7776
F. (305) 278-7473
WWW.BELLONMILANES.COM
AA-26002616

ARCHITECTURE
LAND PLANNING
INTERIORS

CONSTRUCTION MANAGEMENT

CONSULTANTS

A CUSTOM RESIDENCE FOR:

Mr. AND MRS. R. SANCHEZ / NOLAN RODRIGUEZ

13940 OLD CUTTLER ROAD
PALMETTO BAY, FLORIDA

MARK	DATE	DESCRIPTION

PROJECT No. LB269
DRAWN BY: JP / AM
CHECKED BY: LB
DATE: 06-18-14

STATE OF FLORIDA
LEOPOLDO BELLON
No. 8737
06-27-14
LICENSED ARCHITECT

LEOPOLDO BELLON, AIA (AR-8737)

SHEET TITLE

DETAILS

A-7

SHEET OF

0001002581

DERM
PLAN REVIEW
FINAL
APPROVAL
M2016001461
DEPARTMENT OF ENVIRONMENTAL RESOURCES MANAGEMENT
FORE REVIEWER ID NO. NS
SIGNATURE [signature] DATE 3-3-16

V ROAD X FIRE HC SCHOOL
IMPACT FEE PAID
M2016001461
FEB 25 2016
MIAMI-DADE COUNTY
APPROVED HC

WATER AND SEWER DIVISION
Reviewed by Nancy Cobb
Initial [initials] Date 4/14/16
VERIFICATION FORM 2016S4404
Not Required
GRD. LETTER 02-05
Required Not Required
OTHER N17101

VILLAGE OF PALMETTO BAY
DEPARTMENT OF PUBLIC WORKS
Reviewed by
APPROVED _____ DISAPPROVED _____
BY DC DATE 4/25/16
DIRECTOR

M2016001461