33-5033-024-0040
Issued 10/3/19

Approved
Edward Silva, Village Manager
Date

VILLAGE OF PALMETTO BAY
9705 E. HIBISCUS STREET
PALMETTO BAY, FLORIDA 33157
(305) 259-1234 Fax: (305) 259-1290

REQUEST FOR PUBLIC RECORDS

Requests are filled in accordance with the provisions of Chapters 119 and 257, Florida Statutes.

DATE: 11-13-19

NAME: Cesar A. Jimenez

COMPANY: Penton Building Desing.

ADDRESS: 1517 SW Flagler Ter Apt 1

PHONE: 7542070274 FAX:

EMAIL: Cejime2000@yahoo.com.

REQUEST (Attach additional page, if necessary): Copies of the following documents:

BRF-2019-4099 permit ① card
② App
③ plans

****

FOR USE BY VILLAGE STAFF ONLY

TRACKING NO.: 2019-370

DATE FORWARDED: 11-13-19

ASSIGNED DEPT: Building

DATE REQUEST FILLED: 11/18/19

NUMBER OF COPIES:

ESTIMATED TIME (IF APPLICABLE):

ESTIMATED COST:

HOW WAS REQUEST FILLED?

IF NOT FILLED, REASON:

BY: [signature]

WALK IN

PLANS PROCESSING

Process Number:_____BRF-2019-4099

Description of Work:____RE-ROOF SHINGLE, STEEP SLOPE 1624 SQUARE FEET, TOTAL 1624 SQ FT

Property Address:_____9350 SW 183 TER

Folio Number: _____3350330240040

Department	Date In	Date Out	Total Business Days	Approved	Denied	Comments
Planning & Zoning						
Building	10/3/19	10/3/19		✓		
FLOOD REVIEW						
ADA Review						
Structural						
Electrical						
Mechanical						
Plumbing						
Public Works						
Pending Corrections						
Code Enforcement Verification				10/3		* has liens, advised person picking up root permit to advise owner
Job Cost/ Value of Work (Inspector Approval)						
Building Official approval	10/3/19					
Final Signature						
Pricing						
Call for Pick up						

Village of Palmetto Bay Permit Application

Department of Building & Capital Projects
9705 E. Hibiscus Street
Palmetto Bay, Florida 33157
Phone: (305) 259-1250 Fax: (866) 927-5576 Inspections: (305) 259-1253

GENERAL INFORMATION: Please read these instructions carefully before submitting the work for review

This application must be completed and signed by both the property owner and qualifier. Both of these signatures must be notarized. Please print legibly or type in order not to delay your application. For roofing permits, in addition to this permit you must also fill out a roofing permit application. Express permits require an additional fee and will only be accepted between the hours of 8:00 A.M. and 10:00 A.M., Monday through Friday. All other permits/plans must be dropped off before 4:30 p.m. for regular processing. During the processing of your application you may be asked to submit additional information. There may be additional permits and reviews required from other governmental agencies not affiliated with Palmetto Bay.

APPLICATION:

Clerk's Initials	Plan Process Number	Master Permit Number	Subsidiary Permit Number(s)	Expiration Date
MAR		BRF-2019-4099		

Job Address: 9350 SW 183 Ter miami Fl 33157
Address | Unit number | City | State | Zip Code

Folio Number: 33-5033-024-0040
Lot: 4 **Block:** 58
Subdivision: Bel Air Sec **PB:** 92-7 **PG:**
Current Use of Property: S.F.H.
Proposed Use of Property: S.F.H.
Description of Work: Re-Roof shingle
Dumpster permit to be included? Yes ____ **NO** ____
Zoning: ____ **Square Feet:** ____
Tenant Information: **Unit Number:**

Linear Feet: 1,624 **Units:** 1 **Stories:** 1
Value of Proposed Work: 6,500.00 **Est. Bldg. Value:** ____
Tax Assessed Value: ____
Flood Zone: ____ **Base Floor Elev.:** ____
Homeowner's Association: ____

I affirm that there ☐ are or ☐ are no restrictive covenants associated with the underlying property that would affect the pending application. Failure to disclose this information shall result in the immediate revocation of any type of permit or certificate of use/occupancy.

Check Permit Type		Check Permit Change		Check Type of Improvement			
Building		Change of Contractor		New Construction		Deck/Concrete flatwork	
Electrical		Permit Renewal		Exterior Alteration		Window Replacement	
Mechanical		Plan Revision		Interior Alteration		Shutters	
Plumbing		Permit Extension		Attached Addition		Garage Doors	
LPGX		Supplement		Detached Addition		Storage Shed	
Roofing		Re-inspection Fee		Repair		Railings	
Fence				Repair due to Fire		Stairs	
Sign				Demolish		Windows/Doors	
Public Works				Screen Enclosure		Roofing	
Other				Driveway		Re-Roof	
				Fence		Seal-cote	
				Pool		Other	

10032019

Architect Information	Engineer Information
Name:	Name:
License Number:	License Number:
Address:	Address:
Telephone Number:	Telephone Number:
Email address	Email address

Property Owner	Contractor
Name: Raul Bolufe	Company Name RENTON BUILDING & DESIGN
Address: 8350 SW 183 Ter	Qualifier LORENZO PERALTA
Home Telephone:	License Number CCC1320391
Business Telephone: (305) 778-3515	Address 6910 SW 145 TERRACE
Email Address	Telephone Number 786-200-4958
Fax Number:	Fax Number

Plans Processing Contact Person	
Name: Maria Perez	Email: mariaperez.1217
Telephone Number: 786 797-8631	

Bond Company (if applicable)	Mortgage Lender
Name:	Name:
Address:	Address:
City: State: Zip	City: State: Zip
Does Property have Homestead Exemption	Email Address

Classification Of Proposed Work

Residential ☐ Duplex ☐ Townhouse ☐ Multi Family ☐ Commercial ☐ Industrial ☐ Other ☐

Effective Code _____ Occupancy _____ Construction Type _____

Zoning: Variance Number: Remarks:

OWNER AFFIDAVIT

Application is hereby made to obtain a permit to do the work and installation as indicated. I certify that no work or installation has commenced prior to the issuance of a permit and that all work will be performed to meet the standards of all laws regulating construction in this jurisdiction. I understand that a separate permit must be secured for **ELECTRICAL, MECHANICAL, PLUMBING, SIGNS, WELLS, POOLS, ROOFING, SHUTTERS, WINDOWS, FURNACES, BOILERS, HEATERS, TANKS, FENCE, DRIVEWAYS and AIR CONDITIONERS, ETC.** In addition to the requirements of this permit, there may be additional restrictions found in the Public Records, and there may be additional permits required from other governmental entities.

I, the owner of the property, have disclosed all information related to any work that has been performed in the prior twelve months to the Building Division as part of this application. Further, I am fully aware that if the cumulative cost of work to my home or business under this and any other permit equals or exceeds fifty percent of the fair market value of the structure, the entire structure must meet the present federal flood criteria for finished floor elevation. I am also fully aware that if the cost of work to my home or business under this and any other permit equals or exceeds fifty per cent of the replacement cost of the structure, then the entire structure must conform to current code requirements of the Florida Building Code.

I, the owner of the property, understand that a permit application is subject to denial and a validated permit or permit card is subject to revocation or modification based upon applicable deeds, covenants, declarations, easements and any other legal restriction. By issuing a permit, the Village of Palmetto Bay makes no representation as to the existence or validity of any property restriction.

I, the owner of the property certify that all the foregoing information is accurate and that all work will be done in compliance with all applicable laws regulating construction and zoning.

WARNING TO OWNER: YOUR FAILURE TO RECORD A NOTICE OF COMMENCEMENT MAY RESULT IN YOUR PAYING TWICE FOR IMPROVEMENTS TO YOUR PROPERTY. A NOTICE OF COMMENCEMENT MUST BE RECORDED AND POSTED ON THE JOB SITE BEFORE THE FIRST INSPECTION. IF YOU INTEND TO OBTAIN FINANCING, CONSULT WITH YOUR LENDER OR AN ATTORNEY BEFORE COMMENCING WORK OR RECORDING YOUR NOTICE OF COMMENCEMENT.

Signature (Owner) _____

Printed Raul Bolufe

FOR AN OATH OR AFFIRMATION:
STATE OF FLORIDA COUNTY OF MIAMI-DADE
Sworn to (or affirmed) and subscribed before me this 27th day of Sept., 2019, by (Name of person making statement).

Signature _____

Printed Kenya Garcia Custodio

Personally Known ✓ OR Produced Identification _____
Type of Identification Produced _____

KENYA GARCIA CUSTODIO
MY COMMISSION # GG 037942
EXPIRES: October 12, 2020
Bonded Thru Notary Public Underwriters

Signature (Contractor) _____

Printed LORENZO PERALTA

FOR AN OATH OR AFFIRMATION:
STATE OF FLORIDA COUNTY OF MIAMI-DADE
Sworn to (or affirmed) and subscribed before me this 27th day of Sept, 2019, by (Name of person making statement)

Signature _____

Printed Kenya Garcia Custodio

Personally Known ✓ OR Produced Identification _____
Type of Identification Produced _____

KENYA GARCIA CUSTODIO
MY COMMISSION # GG 037942
EXPIRES: October 12, 2020
Bonded Thru Notary Public Underwriters

IMPORTANT NOTICES

- Do not begin work without receiving you validated permit and permit card. Applying for a permit does not grant you the right to commence construction. Construction can only occur during the hours of 7:00 a.m. to 7:00 p.m., Monday thru Saturday and from the hours of 9:00 a.m. to 6:00 p.m. on Sundays and Federal holidays.
- All construction sites must be maintained in a clean and orderly condition free from construction debris. Failure to do so will result in a fine and a suspension of inspections until said property is cleaned.
- Streets and neighboring properties shall be kept free from dirt and debris.
- Swales must be protected from damage by equipment or vehicles and sidewalks cannot be blocked.
- Portable Toilets for construction jobs require a separate permit. If toilet is not available the inspection will not be performed.
- Water cannot be discharged into the right of way or storm drains without the approval of the Public Works Department.
- No equipment or materials can be stored on the right of way; they must only be stored on your property.
- Florida Department of Health approval is required for applications involving Septic Tanks. Department of Environmental Resources Management (DERM) and /or Miami-Dade Water and Sewer Department approval is required for applications involving sewers and water. The tree section of the Department of Environmental Resources Management (DERM) approval is required on all landscape plans and on all tree removal applications.

CHECKLIST (OFFICE USE ONLY)

☐ OWNER-BUILDER FORM (Attached)

☐ FIRE DEPARTMENT APPROVAL (Commercial/multi (family only)

☐ CONCURRENCY (New Construction)

☐ PROOF OF OWNERSHIP (Attached)

☐ CONDO ASSOCIATION APPROVAL

☐ UPFRONT FEES AMOUNT: _____

☐ HEALTH DEPARTMENT APPROVAL (Septic/Sewer)

☐ IMPACT FEE (New Construction)

☐ SCHOOL REVIEW (New Construction)

☐ DERM REVIEW (New Construction/Additions/Tree Removal)

☐ PUBLIC WORKS

☐ PERMIT CLERK REVIEW
By: _____

- ☐ Complete Application
- ☐ Current liability ins.
- ☐ Worker's Comp.
- ☐ Cont. Lic. Check

☐ OTHER (Specify and Attach)

☐ FLORIDA DEPARTMENT OF BUSINESS AND PROFESSIONAL REGULATION APPROVAL (RESTAURANTS)

PERMIT FEES (OFFICE USE ONLY)

Village of Palmetto Bay Permit Fees	253.34	**Art in Public Places**	
Miami-Dade County Fees (sq. ft. x $65//1000x0.60)	420	**Certificate of Use and Occupancy**	
Flood Zone Review		**Zoning Inspection Fee** ($50.00 per application)	
Radon-Inspector State Educational Fund and DCA State fee	253	**Administration Fee**	
Code Enforcement Fine	253	**Express Fee** (25.00)	25.00
Certificate of Completion		**Public Works Fee**	
Construction Sign Fee		**Landscape Review Fee** (175.00 per hour)	
Roll-off Waste Container Fee (105.00 per container site)		**Special Review Fee** (89.25 per hour)	
Rework Fee		**Other**	

287.60

PLAN REVIEWER APPROVAL AREA (OFFICE USE ONLY)

SECTION	REVIEWER APPROVAL'S NAME	APPROVAL DATE	REJECTED DATE NUMBER 1	REJECTED DATE NUMBER 2	REJECTED DATE NUMBER 3
COMMUNITY DEVELOPMENT					
ZONING					
ELECTRICAL					
MECHANICAL					
PLUMBING					
FIRE					
ROOFING					
PUBLIC WORKS					
PLANNING					
STRUCTURAL					
BUILDING					
BUILDING OFFICIAL					

REWORKS: A fee of **$105.50** may be charged for failure to make required corrections previously indicated. The fee shall be charged after the initial review plus one follow up review per trade. Please note that Florida Statutes 553.80 section 2(b) states "with respect to evaluation of design professionals documents, if a local government finds it necessary, in order to enforce compliance with the Florida Building Code and issue a permit, to reject design documents required by the code three or more times for failure to correct a code violation specifically noted in each rejection, including but not limited to egress, fire protection, structural stability, energy, accessibility, lighting, ventilation, electrical, mechanical, plumbing, and gas systems, or other requirements identified by rule of the Florida Building Commission adopted pursuant to Chapter 120, the local government shall impose, each time after third such review the plans are rejected for that code violation a fee of **four times the amount** of the proportion of the permit fee attributed to plans review".

ISSUING OFFICIAL

FINAL PLAN REVIEWED AND PREPARED FOR ISSUANCE BY: _____ DATE: _____

CONDITIONS OF APPROVAL

PLAN TRACKING

Plans Checked out	Date	Clerk	Plans Checked in	Date	Clerk

EXPRESS PERMIT FEE-REVIEW ONLY

I understand that an additional fee of $25.00 (Per-Review) will be applied to my permit at final fee.

Authorization: Maria Perez **Date:** 10/3/19

EXPEDITED PLAN REVIEW-PER TRADE,PER REVIEW

I understand that an additional fee of $85.89(per trade &review only) Will be applied to a RUSH review for permits with plans.
(For Example: New Construction, Additions, and Remodeling & Revisions to plans).

Authorization: _____ ***Date:*** _____

OFFICE OF THE PROPERTY APPRAISER

Summary Report

Generated On : 10/3/2019

Property Information	
Folio:	33-5033-024-0040
Property Address:	9350 SW 183 TER Palmetto Bay, FL 33157-5772
Owner	HUGO ROMERO
Mailing Address	9350 SW 183 TERR MIAMI, FL 33157-5772
PA Primary Zone	0100 SINGLE FAMILY - GENERAL
Primary Land Use	0101 RESIDENTIAL - SINGLE FAMILY : 1 UNIT
Beds / Baths / Half	3 / 1 / 0
Floors	1
Living Units	1
Actual Area	1,862 Sq.Ft
Living Area	1,498 Sq.Ft
Adjusted Area	1,535 Sq.Ft
Lot Size	7,800 Sq.Ft
Year Built	Multiple (See Building Info.)

Assessment Information			
Year	2019	2018	2017
Land Value	$122,400	$114,750	$114,750
Building Value	$119,305	$120,920	$104,299
XF Value	$1,170	$1,186	$1,201
Market Value	$242,875	$236,856	$220,250
Assessed Value	$242,875	$236,856	$220,250

Taxable Value Information			
	2019	2018	2017
County			
Exemption Value	$0	$0	$0
Taxable Value	$242,875	$236,856	$220,250
School Board			
Exemption Value	$0	$0	$0
Taxable Value	$242,875	$236,856	$220,250
City			
Exemption Value	$0	$0	$0
Taxable Value	$242,875	$236,856	$220,250
Regional			
Exemption Value	$0	$0	$0
Taxable Value	$242,875	$236,856	$220,250

Benefits Information				
Benefit	Type	2019	2018	2017

Note: Not all benefits are applicable to all Taxable Values (i.e. County, School Board, City, Regional).

Short Legal Description
BEL AIRE SEC 16 PB 92-7
LOT 4 BLK 58
LOT SIZE 75 X 104
OR 15215-1029 1091 1
F/A/U 30-5033-024-0040

Sales Information			
Previous Sale	Price	OR Book-Page	Qualification Description
02/01/2005	$0	23240-4745	Sales which are disqualified as a result of examination of the deed
10/01/1991	$85,000	15215-1029	Sales which are qualified
07/01/1987	$71,500	13367-499	Sales which are qualified

The Office of the Property Appraiser is continually editing and updating the tax roll. This website may not reflect the most current information on record. The Property Appraiser and Miami-Dade County assumes no liability, see full disclaimer and User Agreement at http://www.miamidade.gov/info/disclaimer.asp

Version:

DIVISION of CORPORATIONS
an official State of Florida website

Detail by Entity Name

Florida Limited Liability Company
BARR HOLDINGS LLC

Filing Information

Document Number	L03000003976
FEI/EIN Number	04-3738166
Date Filed	02/03/2003
State	FL
Status	ACTIVE
Last Event	LC AMENDMENT
Event Date Filed	05/16/2014
Event Effective Date	NONE

Principal Address

5601 WEST FLAGLER STREET
MIAMI, FL 33126

Changed: 05/16/2014

Mailing Address

5601 WEST FLAGLER STREET
MIAMI, FL 33126

Changed: 05/16/2014

Registered Agent Name & Address

BOLUFE, RAUL
5601 WEST FLAGLER STREET
MIAMI, FL 33126

Name Changed: 05/16/2014

Address Changed: 05/16/2014

Authorized Person(s) Detail

Name & Address

Title MGR

BOLUFE, RAUL
5601 WEST FLAGLER STREET
MIAMI, FL 33126

Title MGR

RODRIGUEZ, CARLOS
5601 WEST FLAGLER STREET
MIAMI, FL 33126

Title MGR

RUBALCABAL, LUIS
5601 WEST FLAGLER STREET
MIAMI, FL 33126

Annual Reports

Report Year	Filed Date
2017	04/04/2017
2018	04/11/2018
2019	03/27/2019

Document Images

03/27/2019 -- ANNUAL REPORT	View image in PDF format
04/11/2018 -- ANNUAL REPORT	View image in PDF format
04/04/2017 -- ANNUAL REPORT	View image in PDF format
03/22/2016 -- ANNUAL REPORT	View image in PDF format
03/18/2015 -- ANNUAL REPORT	View image in PDF format
05/16/2014 -- LC Amendment	View image in PDF format
04/28/2014 -- ANNUAL REPORT	View image in PDF format
04/23/2013 -- ANNUAL REPORT	View image in PDF format
05/01/2012 -- ANNUAL REPORT	View image in PDF format
09/06/2011 -- Reg. Agent Change	View image in PDF format
04/20/2011 -- ANNUAL REPORT	View image in PDF format
04/26/2010 -- ANNUAL REPORT	View image in PDF format
04/16/2009 -- ANNUAL REPORT	View image in PDF format
04/25/2008 -- ANNUAL REPORT	View image in PDF format
04/26/2007 -- ANNUAL REPORT	View image in PDF format
04/10/2006 -- ANNUAL REPORT	View image in PDF format
04/25/2005 -- ANNUAL REPORT	View image in PDF format
04/13/2004 -- ANNUAL REPORT	View image in PDF format
09/30/2003 -- Amendment	View image in PDF format
02/03/2003 -- Florida Limited Liabilites	View image in PDF format

CFN 2019R0569554
OR BK 31603 Pg 982 (1Pgs)
RECORDED 09/12/2019 09:06:41
DEED DOC TAX $1,578.60
HARVEY RUVIN, CLERK OF COURT
MIAMI-DADE COUNTY, FLORIDA

IN THE CIRCUIT COURT OF THE ELEVENTH JUDICIAL CIRCUIT IN AND FOR MIAMI-DADE COUNTY, FLORIDA

DEUTSCHE BANK NATIONAL TRUST COMPANY,
Plaintiff(s) / Petitioner(s)

VS.

ROMERO, HUGO L , et al.
Defendant(s) / Respondents(s)

GENERAL JURISDICTION DIVISION

Case No:	2018-011563-CA-01
Section:	(Section, CA 11)
Doc Stamps:	$1,578.60
Surtax:	$0.00
Consideration:	$263,100.00

CERTIFICATE OF TITLE

The undersigned clerk of the court certifies that a Certificate of Sale was executed and filed in this action on August 23, 2019, for the property described herein and that no objections to the sale have been filed within the time allowed for filing objections.

The following property in Miami-Dade County, Florida:

LOT 4, IN BLOCK 58, OF SECTION SIXTEEN BEL-AIRE, ACCORDING TO THE PLAT THEREOF, AS RECORDED IN PLAT BOOK 92, AT PAGE 7, OF THE PUBLIC RECORDS OF MIAMI-DADE COUNTY, FLORIDA.

Property Address: 9350 SW 183RD TER, MIAMI, FL 33157

was sold to:
BARR HOLDINGS LLC
7035 GLENEAGLE DRIVE
MIAMI LAKES, FL, 33014

FILE FOR RECORD
2019 SEP -6 PM 3:06
HARVEY RUVIN
CLERK CIRCUIT & COUNTY CTS
MIAMI-DADE COUNTY, FL
RECORDING DIVISION #201

WITNESS my hand and the seal of this court on September 06, 2019.

CIRCUIT AND COUNTY COURTS
DADE COUNTY, FLORIDA

Harvey Ruvin

Harvey Ruvin, Clerk of Courts
Miami-Dade County, Florida

Rev. 10/5/2009

OWNER'S AFFIDAVIT OF EXEMPTION

ROOF TO WALL CONNECTION HURRICANE MITIGATION RETROFIT FOR EXISTING SITE- BUILT SINGLE FAMILY RESIDENTIAL STRUCTURES PURSUANT TO SECTION 553.844 F.S. & FBC- EXISTING BUILDING, 5th EDITION (2014) SECTION 708.8

To: Community Development Department- Building & Permitting Division
9705 E Hibiscus Street
Palmetto Bay, FL 33157

Re: Owner's Name:
Property Address: 9350 SW 183 Ter
Roofing Permit Number:

Dear Building Official:

I Raul Bolufe certify that I am not required to retrofit the roof to wall connections of my residence because:

_____ The building is uninsured or has an insurance value of $300,000 or less AND,

Has a just valuation for the structure for purposes of ad valorem taxations is less than $300,000. Provide a copy of (Miami-Dade County Property appraiser's Assessment)

(or)

_____ The Building was constructed in compliance with the provisions of the Florida Building Code (FBC) or with the provisions of the 1994 edition of the South Florida Building Code (1994 SFBC) (Provide copy of Certificate of Occupancy)

(or)

_____ The roof-to-wall connections for gables and all corners cannot be completed for less than 15% of the cost of the roof replacement. (Provide an estimate of cost for retrofit improvements by a General Contractor or Roofing Contractor)

Signature of Property Owner

Raul Bolufe
Print Name

STATE OF FLORIDA COUNTY OF MIAMI-DADE

Sworn to and subscribed before me this 1st

Day of October, 20 19

_____ Personally Known
✓ Or Produced Identification

MARIA MARTINEZ
Notary Public - State of Florida
Commission # GG 000312
My Comm. Expires Jun 7, 2020

MARIA MARTINEZ
Notary Public - State of Florida
Commission # GG 000312
My Comm. Expires Jun 7, 2020

When the just valuation of the structure for purposes of ad valorem taxation is equal to or more than $300,000.00, and the building was not constructed in compliance with the FBC nor with 1994 SFBC and affidavit of Roof to Wall Connection Hurricane Mitigation Retrofit must be provided.

SECTION 1524

HIGH VELOCITY HURRICANE ZONES– REQUIRED OWNERS NOTIFICATION FOR ROOFING CONSIDERATIONS

1524.1 Scope. As it pertains to this section, it is the responsibility of the roofing contractor to provide the owner with the required roofing permit, and to explain to the owner the content of this section. The provisions of Chapter 15 of the ***Florida Building Code, Building*** govern the minimum requirements and standards of the industry for roofing system installations. Additionally, the following items should be addressed as part of the agreement between the owner and the contractor. The owner's initial in the designated space indicates that the item has been explained.

[RB] **1. Aesthetics-workmanship:** The workmanship provisions of Chapter 15 (High Velocity Hurricane Zone) are for the purpose of providing that the roofing system meets the wind resistance and water intrusion performance standards. Aesthetics (appearance) are not a consideration with respect to workmanship provisions. Aesthetic issues such as color or architectural appearance, that are not part of a zoning code, should be addressed as part of the agreement between the owner and the contractor.

[RB] **2. Renailing wood decks:** When replacing roofing, the existing wood roof deck may have to be renailed in accordance with the current provisions of Chapter 16 (High Velocity Hurricane Zones) of the Florida Building Code. (The roof deck is usually concealed prior to removing the existing roof system).

[RB] **3. Common roofs:** Common roofs are those which have no visible delineation between neighboring units (i.e. townhouses, condominiums, etc.). In buildings with common roofs, the roofing contractor and/or owner should notify the occupants of adjacent units of roofing work to be performed.

[RB] **4. Exposed ceilings:** Exposed, open beam ceilings are where the underside of the roof decking can be viewed from below. The owner may wish to maintain the architectural appearance; therefore, roofing nail penetrations of the underside of the decking may not be acceptable. The owner provides the option of maintaining this appearance.

[RB] **5. Ponding water:** The current roof system and/or deck of the building may not drain well and may cause water to pond (accumulate) in low-lying areas of the roof. Ponding can be an indication of structural distress and may require the review of a professional structural engineer. Ponding may shorten the life expectancy and performance of the new roofing system. Ponding conditions may not be evident until the original roofing system is removed. Ponding conditions should be corrected.

[RB] **6. Overflow scuppers (wall outlets):** It is required that rainwater flow off so that the roof is not overloaded from a build up of water. Perimeter/edge walls or other roof extensions may block this discharge if overflow scuppers (wall outlets) are not provided. It may be necessary to install overflow scuppers in accordance with the requirements of: Chapter 15 and 16 herein and the ***Florida Building Code, Plumbing***.

[RB] **7. Ventilation:** Most roof structures should have some ability to vent natural airflow through the interior of the structural assembly (the building itself). The existing amount of attic ventilation shall not be reduced. **Exception:** Attic spaces, designed by a Florida-licensed engineer or registered architect to eliminate the attic venting, venting shall not be required.

Owner's/Agent's Signature: [signature] Date: 10 / 1 / 19

Contractor's Signature: [signature] Permit Number:

Property Address: 9350 SW 183 Ter

SECTION 1525
HIGH-VELOCITY HURRICANE ZONES UNIFORM PERMIT APPLICATION

Florida Building Code 5th Edition (2014)
High-Velocity Hurricane Zone Uniform Permit Application Form

INSTRUCTION PAGE

COMPLETE THE NECESSARY SECTIONS OF THE UNIFORM ROOFING PERMIT APPLICATION FORM AND ATTACH THE REQUIRED DOCUMENTS AS NOTED BELOW:

Roof System	Required Sections of the Permit Application Form	Attachments Required See List Below
Low Slope Application	A,B,C	1,2,3,4,5,6,7
Prescriptive BUR-RAS 150	A,B,C	4,5,6,7
Asphaltic Shingles	A,B,D	1,2,4,5,6,7
Concrete or Clay Tile	A,B,D,E	1,2,3,4,5,6,7
Metal Roofs	A,B,D	1,2,3,4,5,6,7
Wood Shingles and Shakes	A,B,D	1,2,4,5,6,7
Other	As Applicable	1,2,3,4,5,6,7

ATTACHMENTS REQUIRED:

1.	Fire Directory Listing Page
2.	From Product Approval: Front Page Specific System Description Specific System Limitations General Limitations Applicable Detail Drawings
3.	Design Calculations per Chapter 16, or if applicable, RAS 127 or RAS 128
4.	Other Component of Product Approval
5.	Municipal Permit Application
6.	Owners Notification for Roofing Considerations (Reroofing Only)
7.	Any Required Roof Testing/Calculation Documentation

Florida Building Code 6th Edition (2017)
High-Velocity Hurricane Zone Uniform Permit Application Form

Section A (General Information)

Master Permit Number _____ **Process Number** _____

Contractor's Name Penton Building & Design

Job Address 9350 SW 183rd Ter

ROOF CATEGORY

☐ Low Slope ☐ Mechanically Fastened Tile ☐ Mortar/Adhesive Set Tile

☒ Asphalt Shingles ☐ Metal Panels/Shingles ☐ Wood Shingles/Shakes

Is there an existing Roof Top Solar System? ○ Yes ☒ No **Will it be reinstalled?** ○ Yes ○ No

Are there gas vents on the roof? ○ Yes ○ No **Type?** ☐ Natural ☐ LPGX

ROOF TYPE

☐ New Roof ☐ Repair ☐ Maintenance ☒ Reroofing ☐ Recovering

ROOF SYSTEM ROOF INFORMATION

Low Slope Roof Area (ft²) — **Steep Slope Roof Area (ft²)** 1,624 **Total (ft²)** 1,624

Section B (Roof Plan)

Sketch the Roof Plan: Illustrate all levels and sections, roof drain, scuppers, overflow scuppers and overflow drains. Include dimensions of sections and levels, clearly identify dimensions of elevated pressure zones and locations of parapets.

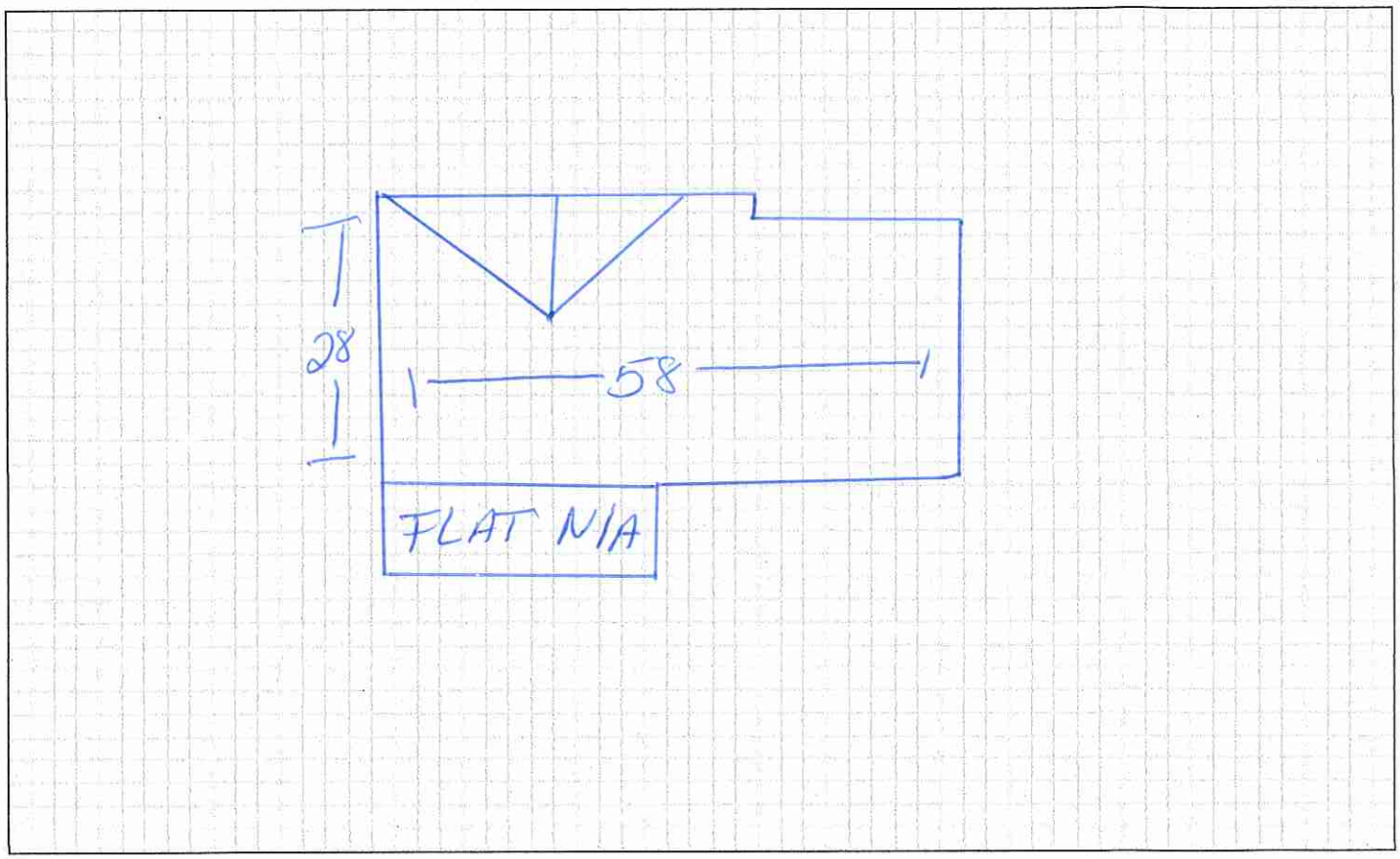

Florida Building Code Edition 2017

High-Velocity Hurricane Zone Uniform Permit Application Form.

Section D (Steep Sloped Roof System)

Roofs System Manufacturer Gaf

Notice of Acceptance Number: 16-0811.11

Minimum Design Wind Pressures, If Applicable (From RAS 127 or Calculations):

P1: *N/A* P2: *N/A* P3: *N/A*

Maximum Design Pressure
(From the Product Approval Specific System):
N/A

Steep Sloped Roof System Description

Roof Slope: 3 : 12

Ridge Ventilation?

Mean Roof Height: 12

Deck Type: Plywood

Type Underlayment: 30 lb. Base Sheet (ASTM 226 Type II)

Insulation: N/A

Fire Barrier: N/A

Fastener Type & Spacing: 1.25" RS Roof Nails & tin cap 12" o.c. 6"

Adhesive Type: N/A

Type Cap Sheet: N/A

Roof Covering: Gaf Timberline HD

Type & Size Drip Edge: 3 " x 3 " Galv. 26 ga. 4" o.c

MIAMI-DADE COUNTY
PRODUCT CONTROL SECTION
11805 SW 26 Street, Room 208
Miami, Florida 33175-2474
T (786) 315-2590 F (786) 315-2599
www.miamidade.gov/economy

DEPARTMENT OF REGULATORY AND ECONOMIC RESOURCES (RER)
BOARD AND CODE ADMINISTRATION DIVISION

NOTICE OF ACCEPTANCE (NOA)

GAF
1 Campus Drive
Parsippany, NJ 07054

SCOPE:

This NOA is being issued under the applicable rules and regulations governing the use of construction materials. The documentation submitted has been reviewed and accepted by Miami-Dade County RER - Product Control Section to be used in Miami Dade County and other areas where allowed by the Authority Having Jurisdiction (AHJ).

This NOA shall not be valid after the expiration date stated below. The Miami-Dade County Product Control Section (In Miami Dade County) and/or the AHJ (in areas other than Miami Dade County) reserve the right to have this product or material tested for quality assurance purposes. If this product or material fails to perform in the accepted manner, the manufacturer will incur the expense of such testing and the AHJ may immediately revoke, modify, or suspend the use of such product or material within their jurisdiction. RER reserves the right to revoke this acceptance, if it is determined by Miami-Dade County Product Control Section that this product or material fails to meet the requirements of the applicable building code.

This product is approved as described herein, and has been designed to comply with the Florida Building Code including the High Velocity Hurricane Zone of the Florida Building Code.

DESCRIPTION: GAF Timberline HD®, Timberline® Natural Shadow®, Timberline® American Harvest®, and Fortitude™ Shingles

LABELING: Each unit shall bear a permanent label with the manufacturer's name or logo, city, state and following statement: "Miami-Dade County Product Control Approved", unless otherwise noted herein.

RENEWAL of this NOA shall be considered after a renewal application has been filed and there has been no change in the applicable building code negatively affecting the performance of this product.

TERMINATION of this NOA will occur after the expiration date or if there has been a revision or change in the materials, use, and/or manufacture of the product or process. Misuse of this NOA as an endorsement of any product, for sales, advertising or any other purposes shall automatically terminate this NOA. Failure to comply with any section of this NOA shall be cause for termination and removal of NOA.

ADVERTISEMENT: The NOA number preceded by the words Miami-Dade County, Florida, and followed by the expiration date may be displayed in advertising literature. If any portion of the NOA is displayed, then it shall be done in its entirety.

INSPECTION: A copy of this entire NOA shall be provided to the user by the manufacturer or its distributors and shall be available for inspection at the job site at the request of the Building Official.

This NOA renews and revises NOA # 14-1022.20 and consists of pages 1 through 6.
The submitted documentation was reviewed by Alex Tigera.

3/14/18

MIAMI-DADE COUNTY APPROVED

NOA No.: 16-0811.11
Expiration Date: 02/21/22
Approval Date: 02/09/17

ROOFING ASSEMBLY APPROVAL

Category: Roofing
Sub-Category: Asphalt Shingles
Materials: Laminate
Deck Type: Wood

SCOPE

This approves **GAF Timberline HD®, Timberline® Natural Shadow®, Timberline American® Harvest®, and Fortitude™ Shingles** as manufactured by GAF as described in this Notice of Acceptance.

PRODUCT DESCRIPTION

Product	Dimensions	Test Specifications	Product Description
GAF Timberline HD® *Manufacturing Locations* **#1, 2, 3, 4, 5, 6, 7**	13 1/4" x 39 3/8"	TAS 110	Fiberglass reinforced heavy weight asphalt roof shingle, with a laminate profile
GAF Timberline Natural Shadow® *Manufacturing Locations* **#1, 2, 3, 4, 5, 6, 7**	13 1/4" x 39 3/8"	TAS 110	Fiberglass reinforced heavy weight asphalt roof shingle, with a laminate profile
GAF Timberline® American Harvest® *Manufacturing Locations* **#2, 4, 5, 6**	13 1/4" x 39 3/8"	TAS 110	Fiberglass reinforced heavy weight asphalt roof shingle, with a laminate profile
GAF Fortitude™ *Manufacturing Location* **#4**	13 1/4" x 39 3/8"	TAS 110	Fiberglass reinforced heavy weight asphalt roof shingle, with a laminate profile

MANUFACTURING LOCATION

1. Tampa, FL
2. Michigan City, IN
3. Baltimore, MD
4. Myerstown, PA
5. Ennis, TX
6. Tuscaloosa, AL
7. Dallas, TX

EVIDENCE SUBMITTED

Test Agency	Test Identifier	Test Name/Report	Date
Underwriters Laboratories,LLC	ASTM D3462	4787344101	07/25/16
Underwriters Laboratories, Inc.	ASTM D3462	11CA48924	10/24/11
Underwriters Laboratories, Inc	ASTM D3462	10CA21094	04/22/11
Underwriters Laboratories, Inc	ASTM D3462	10CA28717	07/26/11
Underwriters Laboratories, Inc.	ASTM D3462	05CA47541	11/10/06
Underwriters Laboratories, Inc.	ASTM D3462	06CA31580	11/30/06
PRI Asphalt Technologies, Inc.	ASTM D3462	GAF-101-02-02	11/02/05
Underwriters Laboratories, Inc.	ASTM D3462	06NK05159	08/09/06
PRI Asphalt Technologies, Inc.	ASTM D3462	GAF-098-02-02	11/08/05
Underwriters Laboratories, Inc.	ASTM D3462	02NK41809	08/11/02
Underwriters Laboratories, Inc.	ASTM D3462	03NK26444	10/17/03
Center for Applied Engineering	ASTM D3462	257989	05/13/97
Underwriters Laboratories, Inc.	TAS 107	01NK45803	04/13/94
Underwriters Laboratories, Inc.	TAS 107	06NK05159	08/09/06
Underwriters Laboratories, Inc.	TAS 107	04NK04273	02/20/04
Underwriters Laboratories, Inc.	TAS 107	05CA42840	11/11/05
Underwriters Laboratories, Inc.	TAS 107	02NK41811	11/11/02
Underwriters Laboratories, Inc.	TAS 107	03CA35209	10/17/03
Underwriters Laboratories, Inc.	TAS 107	04CA13850	08/30/04
Center for Applied Engineering	TAS 100	257989	04/01/97
PRI Asphalt Technologies, Inc.	TAS 100	GAF-044-02-01	01/13/04
PRI Asphalt Technologies, Inc.	TAS 100	GAF-098-02-01	11/08/05
PRI Asphalt Technologies, Inc.	TAS 100	GAF-101-02-01	11/09/05
PRI Asphalt Technologies, Inc.	TAS 100	GAF-116-02-02	03/23/06
PRI Asphalt Technologies, Inc.	TAS-100	ELK-083-02-01	10/16/02
		ELK-084-02-01	10/15/02
		ELK-085-02-01	10/14/02
		ELK-086-02-01	10/24/02
		ELK-087-02-01	10/21/02
		ELK-088-02-01	10/16/02
		ELK-107-02-01	10/09/03
		ELK-108-02-01	10/09/03
		ELK-109-02-01	10/09/03

LIMITATIONS

1. Fire classification is not part of this acceptance; refer to a current Approved Roofing Materials Directory for fire ratings of this product.
2. Shall not be installed on roof mean heights in excess of 33 ft.
3. All products listed herein shall have a quality assurance audit in accordance with the Florida Building Code and Rule 61G20-3 of the Florida Administrative Code.

INSTALLATION

1. Shingles shall be installed in compliance with Roofing Application Standard RAS 115.
2. Flashing shall be in accordance with Roofing Application Standard RAS 115
3. The manufacturer shall provide clearly written application instructions.
4. Exposure and course layout shall be in compliance with Detail 'A', attached.
5. Nailing shall be in compliance with Detail 'B', attached.

LABELING

Shingles shall bear the imprint or identifiable marking of the manufacturer's name or logo, city and state of manufacturing facility, and following statement: "Miami-Dade County Product Control Approved" or the Miami-Dade County Product Control Seal as shown below.

MIAMI-DADE COUNTY
APPROVED

BUILDING PERMIT REQUIREMENTS

1. Application for building permit shall be accompanied by copies of the following:
   - **1.1** This Notice of Acceptance.
   - **1.2** Any other documents required by the Building Official or the applicable code in order to properly evaluate the installation of this system.

DETAIL A
COURSE LAYOUT

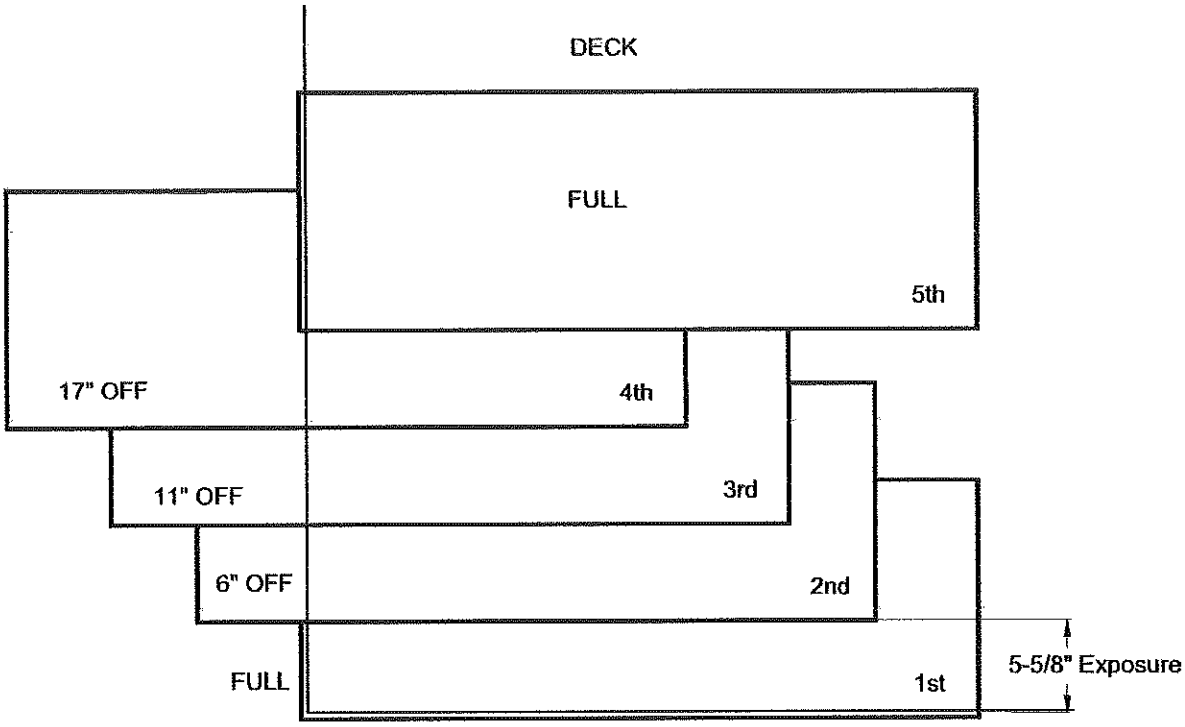

DETAIL B
OVERALL DIMENSIONS AND NAILING PATTERN

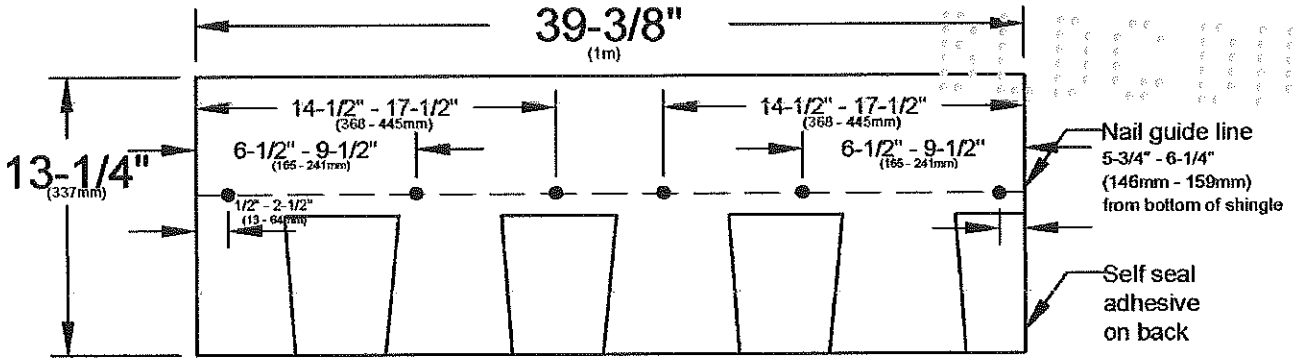

ENHANCED NAILING PATTERN - six nails per shingle*

* required by some local codes and required for enhanced wind coverage on certain products.
See limited warranty for details.

These shingles MUST be nailed a nominal 6" (152mm) from bottom of of shingle, above the cut outs, as shown. Nails must **not** be exposed.

END OF THIS ACCEPTANCE

UL Product iQ™

TFWZ.R21 - PREPARED ROOF-COVERING MATERIALS

Prepared Roof-covering Materials

See General Information for Prepared Roof-covering Materials

R21

GAF
1 CAMPUS DR
PARSIPPANY, NJ 07054 USA

Asphalt glass fiber mat shingles - "Royal Sovereign®", "Sentinel®", "Sentinel® ASTM D3462", "Timberline® HD", "Timberline® Natural Shadow", "Timberline® Ultra HD", "Timberline® Cool Series", "Timberline® Majestic", "Timberline® Majestic 30", "Timberline® American Harvest™", "Fortitude™", "Timberline® ArmorShield™ II", "Grand Timberline®", "Marquis® WeatherMax®", "Grand Canyon™", "Grand Sequoia®", "Grand Sequoia® IR", "Grand Sequoia® ArmorShield™", "Camelot®", "Camelot® II", "Capstone®", "Country Mansion®", "Country Mansion® II", "Grand Slate™", "Grand Slate™ II", "Slateline®", "Woodland®", "Monaco™", "Sienna®" and "Glenwood™" for installation as Class A prepared roof covering. Suitable for installation on minimum 3/8-in. thick plywood roof decks in combination with minimum one ply "Shingle-Mate" or Type 15 or Type 30 underlayment. Also Classified in accordance with ASTM D3161, Class F. Also Classified in accordance with ASTM D3462/D3462M. Also Classified in accordance with ICC ES AC438.

Asphalt glass fiber mat shingles - "WeatherBlocker Starter Strip Shingles" and "Pro-Start™ Starter Strip Shingles" for installation as Class A roof covering. Suitable for installation on minimum 3/8-in. thick plywood in combination with minimum one ply "Shingle-Mate" or Type 15 or Type 30 underlayment. Also Classified in accordance with ASTM D3161/D3161M, Class A. Also Classified in accordance with ASTM D3462/D3462M.

Asphalt glass fiber mat shingles- "Royal Sovereign®", "Sentinel®", "Timberline® HD", "Timberline® Natural Shadow", "Timberline® Ultra HD", "Timberline® Cool Series", "American Harvest", "Fortitude™", "Marquis® WeatherMax®", "Grand Canyon™", "Grand Sequoia®", "Grand Sequoia® IR", and "Camelot®" for installation as Class A prepared roof covering when used with minimum Type 30 underlayment over existing wood shingle roof.

Asphalt glass fiber mat shingles - "Timberline® HDZ" for installation as Class A prepared roof covering. Suitable for installation on minimum 3/8- in. thick plywood roof decks in combination with minimum one ply "Shingle-Mate™ Roof Deck Protection" or Type 15 or Type 30 underlayment with a minimum of three nails per shingle in accordance with the manufacturers installation instructions. Also Classified in accordance with ASTM D3161, Class F. Also Classified in accordance with ASTM D3462/D3462M. Also Classified in accordance with ICC ES AC438.

Asphalt glass mat hip and ridge shingles- "Timbertex Hip and Ridge" for installation as Class A prepared roof covering. Also been evaluated in accordance with ASTM D3161/D3161M, Class F when Henkel "PL Roofing and Flashing Sealant" or Sonneborn "NP1 Gun-Grade Polyurethane Sealant" is applied as specified in manufacturer's application instructions." Also Classified in accordance with ASTM D3462/D3462M.

Asphalt glass mat hip and ridge shingles, "Z-Ridge" for installation as Class A prepared roof coverings.

Asphalt glass mat hip and ridge shingles , "Seal-A-Ridge® ArmorShield™" and "Seal-A-Ridge® IR" for installation as Class A prepared roof coverings. Also been evaluated in accordance with ASTM D3161/D3161M, Class A. Also Classified in accordance with ASTM D3462/D3462M.

Asphalt glass mat hip and ridge shingles, "Seal-A-Ridge® ArmorShield™" and "Seal-A-Ridge® IR" for installation as Class A prepared roof coverings. Also been evaluated in accordance with ASTM D3161/D3161M, Class F when Henkel Corp. "Loctite PL Roofing & Flashing Polyurethane Sealant" is applied as specified in manufacturer's installation instructions. Also Classified in accordance with ASTM D3462/D3462M.

Asphalt glass mat hip and ridge shingles, "Seal-A-Ridge®" for installation as Class A prepared roof coverings. Also been evaluated in accordance with ASTM D3161/D3161M, Class F when Henkel Corp. "Loctite PL S30 Roof & Flashing Sealant" is applied as specified in manufacturer's installation instructions. Also Classified in accordance with ASTM D3462/D3462M.

Asphalt glass mat hip and ridge shingles , "Ridglass®" for installation as Class A prepared roof coverings. Also been evaluated in accordance with ASTM D3161/D3161M, Class A. Also Classified in accordance with ASTM D3462/D3462M.

Asphalt glass mat hip and ridge shingles , "TimberCrest™ Premium SBS-Modified Ridge Cap Shingle" for installation as Class A prepared roof covering. Also been evaluated in accordance with ASTM D3161/D3161M, Class A as specified in manufacturer's installation instructions. Also Classified in accordance with ASTM D3462/D3462M.

Asphalt glass mat hip and ridge shingles, "TimberCrest™ Premium SBS-Modified Ridge Cap Shingle" for installation as Class A prepared roof covering. Also been evaluated in accordance with ASTM D3161/D3161M, Class F when ASTM C920 Henkel "Loctite PL Roofing and Flashing Sealant" is applied as specified in manufacturer's installation instructions. Also Classified in accordance with ASTM D3462/D3462M.

Last Updated on 2019-04-16

The appearance of a company's name or product in this database does not in itself assure that products so identified have been manufactured under UL's Follow-Up Service. Only those products bearing the UL Mark should be considered to be Certified and covered under UL's Follow-Up Service. Always look for the Mark on the product.

UL permits the reproduction of the material contained in the Online Certification Directory subject to the following conditions: 1. The Guide Information, Assemblies, Constructions, Designs, Systems, and/or Certifications (files) must be presented in their entirety and in a non-misleading manner, without any manipulation of the data (or drawings). 2. The statement "Reprinted from the Online Certifications Directory with permission from UL" must appear adjacent to the extracted material. In addition, the reprinted material must include a copyright notice in the following format: "© 2019 UL LLC"

OFFICE COPY

VILLAGE OF PALMETTO BAY

THIS COPY OF PLAN MUST BE AVAILABLE ON BUILDING SITE OR NO INSPECTION WILL BE GIVEN

	APPROVED		DISAPPROVED	
SECTION	BY	DATE	BY	DATE
ZONING				
P & Z				
LANDSCAPING				
FLOOD				
PUBLIC SERVICES				
BUILDING	DRG	10/3/19		
HANDICAP				
STRUCTURAL				
ELECTRICAL				
MECHANICAL				
PLUMBING				
UTILITIES				
BUILDING OFFICIAL				

Subject to compliance with all Federal, State and County Law, rules and regulations. The Village of Palmetto Bay assumes no responsibility for accuracy of all results of these plans.

NOTICE: In addition to the requirements of these permits there may be additional restrictions applicable to this in the public record of this county and village.

BRF-2019-4099

9350 SW 183TER