*please rush

33-5021-000-0351

Approved

Edward Silva, Village Manager

Date

VILLAGE OF PALMETTO BAY
9705 E. HIBISCUS STREET
PALMETTO BAY, FLORIDA 33157
(305) 259-1234 Fax: (305) 259-1290

REQUEST FOR PUBLIC RECORDS

Requests are filled in accordance with the provisions of Chapters 119 and 257, Florida Statutes.

DATE: 11-20-19

NAME: Courtney Ruhff

COMPANY:

ADDRESS:

PHONE: 352-262-9222 FAX:

EMAIL: courtney.ruhff@smartlinkllc.com

REQUEST (Attach additional page, if necessary): Copies of the following documents:

Copy of Permit Application
BLD-2018-2991

* via phone on 11/20/19

* *

FOR USE BY VILLAGE STAFF ONLY

TRACKING NO.: 2019-390

DATE FORWARDED: 11-20-19

ASSIGNED DEPT: Building

DATE REQUEST FILLED: 11/22/19

NUMBER OF COPIES:

ESTIMATED TIME (IF APPLICABLE):

ESTIMATED COST:

HOW WAS REQUEST FILLED?

IF NOT FILLED, REASON:

BY: [signature]

PLANS PROCESSING

Process Number: BLD2018-2991 / EIE2018-3408

Description of Work: Upgrade LTE equipment

Property Address: 14707 S. Dixie Hwy

Department	Date In	Date Out	Total Business Days	Approved	Denied	Comments
Planning & Zoning	9/27/18	9/28/18		✓		
Building	10/1/18	10/3/18		✓		
FLOOD REVIEW						
ADA Review						
Structural	9/25/18	9/25/18	—	✓		
Electrical	9/26/18	9.26.18		✓		
Mechanical						
Plumbing						
Public Works						
Pending Corrections						
Code Enforcement Verification						
Job Cost/ Value of Work (Inspector Approval)						
Building Official approval	10/16/18					
Final Signature						
Pricing						
Call for Pick up						

Permit Action Report
VILLAGE OF PALMETTO BAY

Permit #: BLD-2018-2991
Master permit #:

Permit type: bant - COMMUNICATION ANTENNAS I
Routing queue: b36 - ANTENNAS

Address: 14707 S DIXIE HWY
PALMETTO BAY, FL 33176

Group # - Name	Action Code	Action Description	Completion Date	Completion Code	Completed By	Comments
1 - PERMIT COUNTER	intake	APPLICATION INTAKE	9/25/2018		csotolongo	
2 - PERMIT COUNTER	cuff	COLLECT UPFRONT FEE	9/25/2018		csotolongo	
3 - PLANS PROCESSING	routeplans	ROUTE PLANS FOR REVIEW	9/26/2018		gbilbraut	
4 - ZONING REVIEW	zrev	ZONING REVIEW	10/1/2018	apprve	mrodriguez	APPROVED AS PER MARK ALVAREZ
5 - BUILDING REVIEW	brev	BUILDING REVIEW	10/3/2018	apprve	ogarcia	10.03.18 Building aprpoved Orestes Garcia gb
6 - ELECTRICAL REVIEW	erev	ELECTRICAL REVIEW	9/28/2018	apprve	tflingos	
7 - STRUCTURAL REVIEW	srev	STRUCTURAL REVIEW	9/25/2018	apprve	mcankat	
8 - PLANNING & ZONING RI	pzrev	PLANNING & ZONING REVIEW	10/16/2018		gbilbraut	
9 - PLANS PROCESSING	compcomn	COMPILE COMMENTS	10/16/2018		gbilbraut	
10 - PERMIT COUNTER	verifycont	VERIFY CONTRACTOR	10/16/2018		gbilbraut	
11 - PLANS PROCESSING	notifycust	NOTIFY CUSTOMER	10/17/2018	compl	gbilbraut	
12 - PERMIT COUNTER	collissue	COLLECT FEES/ISSUE PERMIT	10/29/2018		mrivera	
13 - INSPECTIONS	700	NOC	8/21/2019	apprve	gbilbraut	8/21/19 Approved as per Roldan Perez (MT Causley) 1) N.O.C. at the jobsite
13 - INSPECTIONS	623	SIGN ROUGH-ELECTRICAL	8/23/2019		csotolongo	
13 - INSPECTIONS	628	FINAL ELECTRICAL	8/23/2019		csotolongo	
13 - INSPECTIONS	121	FINAL ZONING	8/21/2019	denied	mrodriguez	DENIED AS PER JLOPEZ NO PAPERWORK NOACCESS
13 - INSPECTIONS	121	FINAL ZONING	8/22/2019	apprve	mrodriguez	APPROVED AS PER JLOPEZ
13 - INSPECTIONS	777	FIRE INSPECTIONS REQ	8/23/2019		csotolongo	
13 - INSPECTIONS	758	FINAL STRUCTURAL BUILDING	8/21/2019	part	mtcausley	8/21/19 Partial approved as per Roldan Perez (MT Causley) 1) Engineering inspection letter O.F., unable to finalize due to pending subtrades. Note: This roof is not incompliance with fall protection in mechanical equipment area F.B.C. 1015.6
13 - INSPECTIONS	758	FINAL STRUCTURAL BUILDING	8/23/2019	apprve	mtcausley	APPROVED W. MALTBY
13 - INSPECTIONS	758	FINAL STRUCTURAL BUILDING	8/23/2019		csotolongo	

10069958 M112 FN 6C / 4T4R / BWE

Village of Palmetto Bay Permit Application

Department of Building & Capital Projects
9705 E. Hibiscus Street
Palmetto Bay, Florida 33157
Phone: (305) 259-1250 Fax: (866) 927-5576 Inspections: (305) 259-1253

GENERAL INFORMATION: Please read these instructions carefully before submitting the work for review

This application must be completed and signed by both the property owner and qualifier. Both of these signatures must be notarized. Please print legibly or type in order not to delay your application. For roofing permits, in addition to this permit you must also fill out a roofing permit application. Express permits require an additional fee and will only be accepted between the hours of 8:00 A.M. and 10:00 A.M., Monday through Friday. All other permits/plans must be dropped off before 4:30 p.m. for regular processing. During the processing of your application you may be asked to submit additional information. There may be additional permits and reviews required from other governmental agencies not affiliated with Palmetto Bay.

APPLICATION:

Clerk's Initials	Plan Process Number	Master Permit Number	Subsidiary Permit Number(s)	Expiration Date
CS	BLD2018-2991			

Job Address: 14707 SOUTH DIXIE HIGHWAY, Miami 33176
Address Unit number City State Zip Code

Folio Number: 33-5021-000-0351

Lot: _____ **Block:** _____

Subdivision: UNPLATTED **PB:** _____ **PG:** _____

Current Use of Property: _____

Proposed Use of Property: _____

Description of Work: upgrade LTE equipment on an existing cell tower; Nine (9) total antennea

Dumpster permit to be included? Yes _____ **NO** X

Zoning: _____ **Square Feet:** _____

Tenant Information: **Unit Number:**

Linear Feet: _____ **Units:** _____ **Stories:** _____

Value of Proposed Work: $28,000 **Est. Bldg. Value:** _____

Tax Assessed Value: _____

Flood Zone: _____ **Base Floor Elev.:** _____

Homeowner's Association: _____

I affirm that there ☐ are or ☐ are no restrictive covenants associated with the underlying property that would affect the pending application. Failure to disclose this information shall result in the immediate revocation of any type of permit or certificate of use/occupancy.

Check Permit Type		Check Permit Change		Check Type of Improvement			
Building	x	Change of Contractor		New Construction		Deck/Concrete flatwork	
Electrical		Permit Renewal		Exterior Alteration	x	Window Replacement	
Mechanical		Plan Revision		Interior Alteration		Shutters	
Plumbing		Permit Extension		Attached Addition		Garage Doors	
LPGX		Supplement		Detached Addition		Storage Shed	
Roofing		Re-inspection Fee		Repair		Railings	
Fence		**PACE Program**		Repair due to Fire		Stairs	
Sign				Demolish		Windows/Doors	
Public Works				Screen Enclosure		Roofing	
Other				Driveway		Re-Roof	
				Fence		Seal-cote	
				Pool		Other	

10292018

10069958 M112 FN 6C / 4T4R / BWE

Architect Information	Engineer Information
Name: USA Engineering	Name:
License Number: 72513	License Number:
Address: 2818 Cypress Ridge Blvd Wesley Chapel FL 33544	Address:
Telephone Number:	Telephone Number:
Email address	Email address

Property Owner	Contractor
Name: JUSTO A ATRIO TRS MARTHA S ATRIO TRS	Company Name Mastec Network Solutions, LLC
Address: 335 MARQUESA DR CORAL GABLES, FL 33156	Qualifier Stanley Maclin
Home Telephone:	License Number CGC1515769
Business Telephone:	Address 1975 Joe B Jackson Pkwy Murfreesboro TN 37127
Email Address	Telephone Number
Fax Number:	Fax Number

Plans Processing Contact Person	
Name: Courtney Ruhff	Email:
Telephone Number:	courtney.ruhff@smartlinkllc.com

Bond Company (if applicable) n/a	Mortgage Lender n/a
Name:	Name:
Address:	Address:
City: State: Zip	City: State: Zip
Does Property have Homestead Exemption	Email Address

Classification Of Proposed Work

Residential ☐ Duplex ☐ Townhouse ☐ Multi Family ☐ Commercial ■ Industrial ☐ Other ☐

Effective Code_____ Occupancy_____ Construction Type _____

Zoning: Variance Number: Remarks:

OWNER AFFIDAVIT

Application is hereby made to obtain a permit to do the work and installation as indicated. I certify that no work or installation has commenced prior to the issuance of a permit and that all work will be performed to meet the standards of all laws regulating construction in this jurisdiction. I understand that a separate permit must be secured for **ELECTRICAL, MECHANICAL, PLUMBING, SIGNS, WELLS, POOLS, ROOFING, SHUTTERS, WINDOWS, FURNACES, BOILERS, HEATERS, TANKS, FENCE, DRIVEWAYS and AIR CONDITIONERS, ETC.** In addition to the requirements of this permit, there may be additional restrictions found in the Public Records, and there may be additional permits required from other governmental entities.

I, the owner of the property, have disclosed all information related to any work that has been performed in the prior twelve months to the Building Division as part of this application. Further, I am fully aware that if the cumulative cost of work to my home or business under this and any other permit equals or exceeds fifty percent of the fair market value of the structure, the entire structure must meet the present federal flood criteria for finished floor elevation. I am also fully aware that if the cost of work to my home or business under this and any other permit equals or exceeds fifty per cent of the replacement cost of the structure, then the entire structure must conform to current code requirements of the Florida Building Code.

I, the owner of the property, understand that a permit application is subject to denial and a validated permit or permit card is subject to revocation or modification based upon applicable deeds, covenants, declarations, easements and any other legal restriction. By issuing a permit, the Village of Palmetto Bay makes no representation as to the existence or validity of any property restriction.

I, the owner of the property certify that all the foregoing information is accurate and that all work will be done in compliance with all applicable laws regulating construction and zoning.

WARNING TO OWNER: YOUR FAILURE TO RECORD A NOTICE OF COMMENCEMENT MAY RESULT IN YOUR PAYING TWICE FOR IMPROVEMENTS TO YOUR PROPERTY. A NOTICE OF COMMENCEMENT MUST BE RECORDED AND POSTED ON THE JOB SITE BEFORE THE FIRST INSPECTION. IF YOU INTEND TO OBTAIN FINANCING, CONSULT WITH YOUR LENDER OR AN ATTORNEY BEFORE COMMENCING WORK OR RECORDING YOUR NOTICE OF COMMENCEMENT.

Signature of Owner

State of Florida, County of Miami-Dade

Sworn to (or affirmed) and subscribed before this 7th day of Sept., 2018

by (print name)

Notary Name Tiffany Zwick

Personally known ☒ or I.D. _____

Type of identification produced: _____

Tiffany Zwick
NOTARY PUBLIC
STATE OF FLORIDA
Comm# GG095260
Expires 8/14/2021

Signature of Qualifier

State of Florida, County of Seminole

Sworn to (or affirmed) and subscribed before this 12 day of Sept., 2018.

by (print name) Stanley Maclin

Notary Name Courtney Ruhff

Personally known or I.D. _____

Type of identification produced: _____

COURTNEY RUHFF
Commission # GG 064459
Expires February 8, 2021
Bonded Thru Troy Fain Insurance 800-385-7019

IMPORTANT NOTICES

- Do not begin work without receiving you validated permit and permit card. Applying for a permit does not grant you the right to commence construction. Construction can only occur during the hours of 7:00 a.m. to 7:00 p.m., Monday thru Saturday and from the hours of 9:00 a.m. to 6:00 p.m. on Sundays and Federal holidays.
- All construction sites must be maintained in a clean and orderly condition free from construction debris. Failure to do so will result in a fine and a suspension of inspections until said property is cleaned.
- Streets and neighboring properties shall be kept free from dirt and debris.
- Swales must be protected from damage by equipment or vehicles and sidewalks cannot be blocked.
- Portable Toilets for construction jobs require a separate permit. If toilet is not available the inspection will not be performed.
- Water cannot be discharged into the right of way or storm drains without the approval of the Public Works Department.
- No equipment or materials can be stored on the right of way; they must only be stored on your property.
- Florida Department of Health approval is required for applications involving Septic Tanks. Department of Environmental Resources Management (DERM) and /or Miami-Dade Water and Sewer Department approval is required for applications involving sewers and water. The tree section of the Department of Environmental Resources Management (DERM) approval is required on all landscape plans and on all tree removal applications.

CHECKLIST (OFFICE USE ONLY)

☐ OWNER-BUILDER FORM (Attached)

☐ FIRE DEPARTMENT APPROVAL (Commercial/multi (family only)

☐ CONCURRENCY (New Construction)

☐ PROOF OF OWNERSHIP (Attached)

☐ CONDO ASSOCIATION APPROVAL

☐ UPFRONT FEES AMOUNT: _____

☐ HEALTH DEPARTMENT APPROVAL (Septic/Sewer)

☐ IMPACT FEE (New Construction)

☐ SCHOOL REVIEW (New Construction)

☐ DERM REVIEW (New Construction/Additions/Tree Removal)

☐ PUBLIC WORKS

☐ PERMIT CLERK REVIEW
By: _____

- ☐ Complete Application
- ☐ Current liability ins.
- ☐ Worker's Comp.
- ☐ Cont. Lic. Check

☐ OTHER (Specify and Attach)

☐ FLORIDA DEPARTMENT OF BUSINESS AND PROFESSIONAL REGULATION APPROVAL (RESTAURANTS)

PERMIT FEES (OFFICE USE ONLY)

Village of Palmetto Bay Permit Fees	133.92	**Art in Public Places**	
Miami-Dade County Fees (sq. ft. x $65//1000x0.60)	1680	**Certificate of Use and Occupancy**	
Flood Zone Review		**Zoning Inspection Fee** ($50.00 per application)	4800
Radon-Inspector State Educational Fund and DCA State fee	314 314	**Administration Fee**	11000
Code Enforcement Fine		**Express Fee** (25.00)	
Certificate of Completion		**Public Works Fee**	
Construction Sign Fee		**Landscape Review Fee** (175.00 per hour)	
Roll-off Waste Container Fee (105.00 per container site)		**Special Review Fee** (89.25 per hour)	
Rework Fee		**Other** Certificate	157.00

472.00

PLAN REVIEWER APPROVAL AREA (OFFICE USE ONLY)

SECTION	REVIEWER APPROVAL'S NAME	APPROVAL DATE	REJECTED DATE NUMBER 1	REJECTED DATE NUMBER 2	REJECTED DATE NUMBER 3
COMMUNITY DEVELOPMENT					
ZONING		9-28-18			
ELECTRICAL	9-26-18				
MECHANICAL					
PLUMBING					
FIRE					
ROOFING					
PUBLIC WORKS					
PLANNING					
STRUCTURAL	MC	9/25/18			
BUILDING		10/3/18			
BUILDING OFFICIAL					

REWORKS: A fee of **$105.50** may be charged for failure to make required corrections previously indicated. The fee shall be charged after the initial review plus one follow up review per trade. Please note that Florida Statutes 553.80 section 2(b) states "with respect to evaluation of design professionals documents, if a local government finds it necessary, in order to enforce compliance with the Florida Building Code and issue a permit, to reject design documents required by the code three or more times for failure to correct a code violation specifically noted in each rejection, including but not limited to egress, fire protection, structural stability, energy, accessibility, lighting, ventilation, electrical, mechanical, plumbing, and gas systems, or other requirements identified by rule of the Florida Building Commission adopted pursuant to Chapter 120, the local government shall impose, each time after third such review the plans are rejected for that code violation a fee of **four times the amount** of the proportion of the permit fee attributed to plans review".

ISSUING OFFICIAL

FINAL PLAN REVIEWED AND PREPARED FOR ISSUANCE BY: _____ DATE: _____

CONDITIONS OF APPROVAL

PLAN TRACKING

Plans Checked out	Date	Clerk	Plans Checked in	Date	Clerk

OFFICE OF THE PROPERTY APPRAISER

Summary Report

Generated On : 9/25/2018

Property Information	
Folio:	33-5021-000-0351
Property Address:	14707 S DIXIE HWY Palmetto Bay, FL 33176-7948
Owner	JUSTO A ATRIO TRS MARTHA S ATRIO TRS
Mailing Address	335 MARQUESA DR CORAL GABLES, FL 33156 USA
PA Primary Zone	6200 COMMERCIAL - ARTERIAL
Primary Land Use	1913 PROFESSIONAL SERVICE BLDG : OFFICE BUILDING
Beds / Baths / Half	0 / 0 / 0
Floors	4
Living Units	0
Actual Area	Sq.Ft
Living Area	Sq.Ft
Adjusted Area	25,703 Sq.Ft
Lot Size	24,829 Sq.Ft
Year Built	1986

Assessment Information			
Year	2018	2017	2016
Land Value	$1,365,595	$1,365,595	$1,117,305
Building Value	$2,109,405	$1,834,405	$1,882,695
XF Value	$0	$0	$0
Market Value	$3,475,000	$3,200,000	$3,000,000
Assessed Value	$3,475,000	$3,200,000	$3,000,000

Taxable Value Information			
	2018	2017	2016
County			
Exemption Value	$0	$0	$0
Taxable Value	$3,475,000	$3,200,000	$3,000,000
School Board			
Exemption Value	$0	$0	$0
Taxable Value	$3,475,000	$3,200,000	$3,000,000
City			
Exemption Value	$0	$0	$0
Taxable Value	$3,475,000	$3,200,000	$3,000,000
Regional			
Exemption Value	$0	$0	$0
Taxable Value	$3,475,000	$3,200,000	$3,000,000

Benefits Information				
Benefit	Type	2018	2017	2016

Note: Not all benefits are applicable to all Taxable Values (i.e. County, School Board, City, Regional).

Short Legal Description
21 55 40 .57 AC M/L
BEG NE COR OF S1/2 OF SE1/4 OF
NW1/4 OF SE1/4 TH S ALG E/L 24FT
W140.21FT S101.38FT W198.17FT
TO E/R/W/L SR5 NELY ALG R/W/L

Sales Information			
Previous Sale	Price	OR Book-Page	Qualification Description
10/26/2012	$100	28485-2855	Corrective, tax or QCD; min consideration
04/01/1998	$0	18075-0142	Sales which are disqualified as a result of examination of the deed
06/01/1996	$0	17223-2755	Sales which are disqualified as a result of examination of the deed
07/01/1993	$925,000	15982-5071	Other disqualified

The Office of the Property Appraiser is continually editing and updating the tax roll. This website may not reflect the most current information on record. The Property Appraiser and Miami-Dade County assumes no liability, see full disclaimer and User Agreement at http://www.miamidade.gov/info/disclaimer.asp

Version:

VILLAGE OF PALMETTO BAY
COMMUNITY AND ECONOMIC DEVELOPMENT
9705 East Hibiscus Street Palmetto Bay, FL 33157
305-259-1250

NOTICE TO VILLAGE OF PALMETTO BAY BUILDING OFFICIAL OF EMPLOYMENT AS SPECIAL INSPECTOR

I (We) have been retained by New Cingular Wireless PCS (dba AT&T) to perform special inspector services at the M112 / 10069958 project on the below listed structures as of ~~4/5/18~~ 7/12/18 (date). I am a registered architect or professional engineer licensed in the State of Florida.

PROCESS / PERMIT NUMBER:_____

☐SPECIAL INSPECTOR FOR PILING, CMDC sect. 8-22

☐SPECIAL INSPECTOR FOR TRUSSES >35' LONG OR 6' HIGH, CMDC sect. 8-22

☐SPECIAL INSPECTOR FOR REINFORCED MASONRY, FBC 2122.2.4 & CMDC sect. 8-22

☒SPECIAL INSPECTOR FOR STEEL CONNECTIONS, CMDC sect. 8-22

☐SPECIAL INSPECTOR FOR SOIL COMPACTION, CMDC sect. 8-22

☐SPECIAL INSPECTOR FOR PRECAST UNITS & ATTACHMENTS, CMDC sect. 8-22
(For tilt-up walls systems, inspect reinforcement as well)

☐SPECIAL INSPECTOR FOR CURTAIN WALL, CMDC sect. 8-22

☐SPECIAL INSPECTOR FOR STRUCTURAL GLAZING, CMDC sect. 8-22

☐SPECIAL INSPECTOR FOR LIGHTWEIGHT INSULATING CONCRETE, CMDC sect. 8-22

☐SPECIAL INSPECTOR FOR COMPOSITE FLOOR SYSTEM, CMDC sect. 8-22

☐SPECIAL INSPECTOR FOR _____

***Note**: Only the marked boxes apply.*

The following individual(s) employed by this firm, or me are authorized representatives to perform inspection *

1. DARRYL KROEZE
2. _____
3. _____
4. _____

**Special Inspectors utilizing authorized representatives shall insure the authorized representative is qualified by education or licensure to perform the duties assigned by the Special Inspector. The qualifications shall include: licensure as a professional engineer or architect; graduation from an engineering education program in civil or structural engineering; graduation from an architectural education program; successful completion of the NCEES Fundamentals Examination; or registration as building inspector or general contractor.*

I (We) will notify the Village of Palmetto Bay Building Official of any changes regarding authorized personnel performing inspection services.

I (We) understand that a Special Inspector inspection log for each building must be displayed in a convenient location on the site for reference by the Village of Palmetto Bay Inspector. All mandatory inspections, as required by the Florida Building Code, must be performed by the Village. The Village building inspections must be called for on all mandatory inspections. *Inspections performed by the Special Inspector hired by the Owner are in addition to the mandatory inspections performed by the Department.* Further, upon completion of the work under each Building Permit, I will submit to the Building Inspector at the time of final inspection the completed inspection log form and a sealed statement indicating that to the best of my knowledge, belief and professional judgment those portions of the project outlined above meet the intent of the Florida Building Code and are in substantial accordance with the approved plans.

MARC P. MAIER LICENSE No 72513 STATE OF FLORIDA PROFESSIONAL ENGINEER

Signed, Sealed & License # _____

Date 7/12/18

Engineer/Architect
Name MARC MAIER
(PRINT)
Address 2818 CYPRESS RIDGE BLVD #110
WESLEY CHAPEL, FL 33544

Phone No. (813) 994-0365

VILLAGE OF PALMETTO BAY
COMMUNITY AND ECONOMIC DEVELOPMENT
9705 East Hibiscus Street Palmetto Bay, FL 33157
305-259-1250

NOTICE TO VILLAGE OF PALMETTO BAY BUILDING OFFICIAL OF EMPLOYMENT AS SPECIAL INSPECTOR

I (We) have been retained by AT+T to perform special inspector services at the M112, FA #10069958 project on the below listed structures as of 8/3/2018 (date). I am a registered architect or professional engineer licensed in the State of Florida.

PROCESS / PERMIT NUMBER:_____

☐SPECIAL INSPECTOR FOR PILING, CMDC sect. 8-22

☐SPECIAL INSPECTOR FOR TRUSSES >35' LONG OR 6' HIGH, CMDC sect. 8-22

☐SPECIAL INSPECTOR FOR REINFORCED MASONRY, FBC 2122.2.4 & CMDC sect. 8-22

☑SPECIAL INSPECTOR FOR STEEL CONNECTIONS, CMDC sect. 8-22

☐SPECIAL INSPECTOR FOR SOIL COMPACTION, CMDC sect. 8-22

☐SPECIAL INSPECTOR FOR PRECAST UNITS & ATTACHMENTS, CMDC sect. 8-22
(For tilt-up walls systems, inspect reinforcement as well)

☐SPECIAL INSPECTOR FOR CURTAIN WALL, CMDC sect. 8-22

☐SPECIAL INSPECTOR FOR STRUCTURAL GLAZING, CMDC sect. 8-22

☐SPECIAL INSPECTOR FOR LIGHTWEIGHT INSULATING CONCRETE, CMDC sect. 8-22

☐SPECIAL INSPECTOR FOR COMPOSITE FLOOR SYSTEM, CMDC sect. 8-22

☐SPECIAL INSPECTOR FOR _____

***Note:* Only the marked boxes apply.**

The following individual(s) employed by this firm, or me are authorized representatives to perform inspection *

1. DARRYL KROEZE 2. _____

3. _____ 4. _____

**Special Inspectors utilizing authorized representatives shall insure the authorized representative is qualified by education or licensure to perform the duties assigned by the Special Inspector. The qualifications shall include: licensure as a professional engineer or architect; graduation from an engineering education program in civil or structural engineering; graduation from an architectural education program; successful completion of the NCEES Fundamentals Examination; or registration as building inspector or general contractor.*

I (We) will notify the Village of Palmetto Bay Building Official of any changes regarding authorized personnel performing inspection services.

I (We) understand that a Special Inspector inspection log for each building must be displayed in a convenient location on the site for reference by the Village of Palmetto Bay Inspector. All mandatory inspections, as required by the Florida Building Code, must be performed by the Village. The Village building inspections must be called for on all mandatory inspections. *Inspections performed by the Special Inspector hired by the Owner are in addition to the mandatory inspections performed by the Department.* Further, upon completion of the work under each Building Permit, I will submit to the Building Inspector at the time of final inspection the completed inspection log form and a sealed statement indicating that to the best of my knowledge, belief and professional judgment those portions of the project outlined above meet the intent of the Florida Building Code and are in substantial accordance with the approved plans.

MARC P. MAIER LICENSE No 72513 STATE OF FLORIDA PROFESSIONAL ENGINEER

Signed, Sealed & License # _____

Date 8/3/18

Engineer/Architect
Name MARC MAIER
(PRINT)
Address 2818 CYPRESS RIDGE BLVD. #110
WESLEY CHAPEL, FL 33544

Phone No. (813) 994-0365

Rev. 10/16/17/2017

USA ENGINEERING

2818 Cypress Ridge Blvd., Suite 110
Wesley Chapel, FL 33544
(813) 994-0365
www.usa-engineering.com

Date: May 2, 2018

smartlink

Katie Lebovitz
Project Manager
Smartlink
(407) 697-6094

Subject: **Antenna Mount Analysis Report**

Carrier Designation: *AT&T IMPROVEMENT – 1xBBU RRH Add*
Carrier Site Number: M112_10069958

Site Data: 14707 SOUTH DIXIE HIGHWAY, MIAMI, FL 33176
Latitude: 25.6333000° , Longitude: -80.3384000°
46' – Rooftop
56' / 57' – Antenna Rad Center

Dear Ms. Lebovitz,

USA Engineering, Inc. is pleased to submit this "Antenna Mount Analysis" to determine the structural integrity of the above referenced structure to resist the proposed loading(s) as specified within this report.

THE ANALYSIS HAS BEEN PERFORMED FOR THE FOLLOWING CRITERIA:					
Applicable Codes:	Florida Building Code – 2017 (6th Edition)		ASCE-7-10	TIA-222-G Addendum-2	
Wind Speed:	**Vult** = 175 mph (3 Second Gust)			**Vasd** = 136 mph (3 Second Gust)	
Exposure Category:	C	**Risk Category:**	II	**Radial Ice Thickness:**	0.0"
Importance Factor:	1.0	**Topographic Category:**	I	**Seismic Response:**	N/A

Based on our analysis, we have determined the stress levels of the mount system, under the following loads case, to be as follows:

LOAD CASE(S)	ULTIMATE CRITERION	SERVICEABILITY CRITERION
LC1: AT&T IMPROVEMENT – 1xBBU RRH Add	**Sufficient ✔ Capacity w/Modifications**	**Sufficient ✔ Capacity w/Modifications**

The existing tower platform, arms and/or other aspects of the mounting material **will NOT** support the AT&T proposed loading. USA Engineering recommends the following modifications:

- Install (1 per antenna pipe mount) 4.5" O.D. sched. 40 galv. vertical pipe. Connect to existing standoff using (2 per standoff) 1/2" SAE J429 Gr. 2 U-bolts (torque at 50 ft-lb).
- Connect existing antenna pipes to proposed vertical pipe using (2 per antenna pipe mount) Connect-It #PC35.

This analysis assumes the proposed and/or relocated RRUs are installed on below the antennas on proposed vertical pipes in a back-to-back configuration.

We at *USA Engineering* appreciate the opportunity of providing our continuing professional services to you. If you have any questions or need further assistance on this or any other projects please give us a call.

Submitted by:

MOHAMMAD KHAWAJA
LICENSE
No 80508
STATE OF FLORIDA
PROFESSIONAL ENGINEER

8/3/2018

Nicole Hoffman, EI
Structural Project Manager

Mohammad Khawaja, MCE, PE
Director of Structural Engineering
FL PE No: 80508
COA No: 31705

USA ENGINEERING

2818 Cypress Ridge Blvd., Suite 110
Wesley Chapel, FL 33544
(813) 994-0365
www.usa-engineering.com

Table of Contents

1) **Analysis Procedure**
   a. TABLE 1.1 – LC1: Appurtenance Loading on Tower

2) **Antenna Mount Analysis Results**
   a. TABLE 2.1 – LC1: Existing Alpha Mount Analysis Results
   b. TABLE 2.2 – LC1: Existing Beta Mount Analysis Results
   c. TABLE 2.3 – LC1: Existing Gamma Mount Analysis Results
   d. TABLE 2.4 – LC1: Modified Mount Analysis Results
   e. TABLE 2.5 – LC1: Modified Mount Specs (Per Antenna Pipe Mount)

3) **Supporting Documentation**

4) **Assumptions**

5) **Antenna Mount Mapping Pictures**

6) **Appendix A Calculations**
   a. Existing Alpha Mount
   b. Existing Beta Mount
   c. Existing Gamma Mount
   d. Modified Mount

Submitted by:

MOHAMMAD KHAWAJA LICENSE No 80508 STATE OF FLORIDA PROFESSIONAL ENGINEER

Mohammad Khawaja 8/3/2018

Nicole Hoffman, EI
Structural Project Manager

Mohammad Khawaja, MCE, PE
Director of Structural Engineering
FL PE No: 80508
COA No: 31705

USA ENGINEERING

2818 Cypress Ridge Blvd., Suite 110
Wesley Chapel, FL 33544
(813) 994-0365
www.usa-engineering.com

1) Analysis Procedure

A three-dimensional model and rigorous analysis was created using RISA 3-D (version 16.0.1), a commercially available analysis software package. The stress levels of structural members for the loading case(s) as listed below were calculated as required by the above referenced codes.

TABLE 1.1 LC1: Appurtenance Loading on Tower

Elev.	Status	Carrier	Appurtenance Description
56' / 57'	Final	AT&T	(6)- KMW ET-X-UW-70-16-70-18-iR-AT
56' / 57'	Final	AT&T	(3)- KMW ET-X-UW-68-14-65-18-iR-AT
56' / 57'	Final	AT&T	(1)- KFTDR00110030 Filter
56' / 57'	Final	AT&T	(3)- 4426 B66
56' / 57'	Final	AT&T	(3)- RRUS-11
56' / 57'	Final	AT&T	(3)- 4415 B25
56' / 57'	Final	AT&T	(3)- RRUS-32
56' / 57'	Final	AT&T	(3)- DC6-48-60-18-SS

LC1: AT&T IMPROVEMENT – 1xBBU RRH Add

2) Antenna Mount Analysis Results

TABLE 2.1 – LC1: Existing Alpha Mount Analysis Results

Limit State	Member	Result	Pass/Fail
Ultimate	Vertical Pipe	Demand/Capacity : 178% > 100%	Fail ✗
Serviceability	Antenna Pipe	L/y[1] : 80 < 90 ; 112% > 100%	Fail ✗
	RATING	178%	Fail ✗

1- L/y : Member Length/Vertical Deflection

TABLE 2.2 – LC1: Existing Beta Mount Analysis Results

Limit State	Member	Result	Pass/Fail
Ultimate	Vertical Pipe	Demand/Capacity : 124% > 100%	Fail ✗
Serviceability	Antenna Pipe	L/y[1] : 87 < 90 ; 103% > 100%	Fail ✗
	RATING	124%	Fail ✗

1- L/y : Member Length/Vertical Deflection

USA ENGINEERING

2818 Cypress Ridge Blvd., Suite 110
Wesley Chapel, FL 33544
(813) 994-0365
www.usa-engineering.com

TABLE 2.3 – LC1: Existing Gamma Mount Analysis Results			
Limit State	Member	Result	Pass/Fail
Ultimate	Vertical Pipe	Demand/Capacity : 154% > 100%	Fail ✗
Serviceability	Antenna Pipe	L/y[1] : 70 < 90 ; 129% > 100%	Fail ✗
	RATING	154%	Fail ✗
1- L/y : Member Length/Vertical Deflection			

TABLE 2.4 – LC1: Modified Mount Analysis Results			
Limit State	Member	Result	Pass/Fail
Ultimate	Vertical Pipe	Demand/Capacity : 84% < 100%	Pass ✓
Serviceability	Antenna Pipe	L/y[1] : 177 > 90 ; 51% < 100%	Pass ✓
	RATING	84%	Pass ✓
1- L/y : Member Length/Vertical Deflection			

TABLE 2.5 – LC1: Modified Mount Specs (Per Antenna Pipe Mount)			
# of Antenna Pipes	Front EPA / pipe (ft^2)	Side EPA / pipe (ft^2)	Weight / Pipe (lb)
1	11.94	9.52	500
Note: The service loads above are applied on all antenna pipes simultaneously			

3) Supporting Documentation

- 10069958 M112 FN 6C 4T4R BWE - Final RFDS.04 06 2018
- Antenna Mount Mapping Pictures

4) Assumptions

- The structure and related structures were built and maintained in accordance with the original manufacturer's specifications.
- The structure and all components are assumed to be plumb, in good condition; and free from deformation, rust, corrosion, and cracks.
- The configuration of antennas, transmission cables, mounts, and other appurtenances are as specified in the "Appurtenance Loading" table(s) above and are similar in size and weight to the actual appurtenances on the structure.
- The supporting documents and drawings provided to *USA Engineering, Inc.* resemble the actual field conditions.
- This analysis assumes the new anchorage points are installed on a 4"(min.) concrete slab. Contractor to verify before ordering materials and construction.

If any of these assumptions are not valid or have been made in error, this analysis may be affected, and *USA Engineering, Inc.* should be allowed to review any new information to determine its effect on the structural integrity of the mount.

USA ENGINEERING

2818 Cypress Ridge Blvd., Suite 110
Wesley Chapel, FL 33544
(813) 994-0365
www.usa-engineering.com

Antenna Mount Mapping Pictures

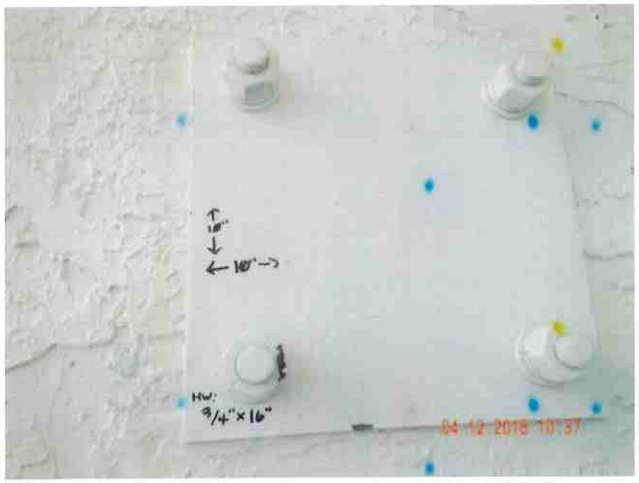

USA ENGINEERING

2818 Cypress Ridge Blvd., Suite 110
Wesley Chapel, FL 33544
(813) 994-0365
www.usa-engineering.com

Appendix A
Calculations

USA ENGINEERING

2818 Cypress Ridge Blvd., Suite 110
Wesley Chapel, FL 33544
(813) 994-0365
www.usa-engineering.com

Existing Alpha Mount

Wind on Appurtenances (TIA-222-Rev G)

Site: M112_10069958

USA ENGINEERING

Basic Wind Specs

Structure: (M)onopole, (S)elf-support, (G)uyed, (A)ppurtenance :	A
h (ft), height of structure from base (only affects Gh for SS) :	46
Structure Class. I, II or III. (typically Class II) :	II
Exposure Category. B, C or D (FL typically is C) :	C
z (ft), AGL elevation of discrete appurtenance :	56
Topographic Category. 1,2,3,4 or 5 (FL typically is 1) :	1
H (ft), height of crest above surrounding terrain :	-
Z (ft), height AGL at the base of the structure :	-
V (mph). Basic Wind Speed, 3-second gust :	136
qz = 0.00256 Kz Kzt Kd V^2 I (psf) :	50.4

Tower type:	*Appurtenance*
Gh :	*1.00*
Kd :	*0.95*
I :	*1.00*
Zg :	*900*
α :	*9.5*
Kz min :	*0.85*
Kz max :	*2.01*
Kz :	*1.12*
Kt :	-
f :	-
Ke :	*1.0*
Kh :	-
Kzt :	*1.00*

Antenna Loads - Front / Side

Description (optional)	# Items	Element Height (in)	Element Width or Diam (in)	Flat or Round (F or R)	Ka	Aspect ratio (A.R.)	C (rounds only)	Ca for element (actual wind)	Ca (max) for A.R. (wind N/A)	EPA per element (sq.ft)	EPA (sq.ft) = CaAa Total (sq.ft)	Σ (cum.)	Σ (for elev)	Fa (lbs)
Position 1, 3 & 4 - Antenna														
ET-X-UW-70-16-70-18-IR-AT FRONT	1	91.7	12.0	F	1.00	7.64		1.42	1.42	10.86	10.86	10.86		
Exposed 2.5" pipe mount FRONT	1	0.0	2.9	R	1.00	288000.00	35	1.11	1.20	0.00	0.00	10.86	10.86	**547**
ET-X-UW-70-16-70-18-IR-AT SIDE	1	91.7	6.3	F	1.00	14.56		1.65	1.65	6.63	6.63	6.63		
Exposed 2.5" pipe mount SIDE	1	84.0	2.9	R	1.00	29.17	35	1.11	1.20	2.02	2.02	8.64	8.64	**436**
Position 1 - RRUS														
RRUS 32 exposed FRONT	1	27.2	7.0	F	1.00	3.89		1.26	1.26	1.67	1.67	1.67	1.67	**84**
RRUS 32 exposed SIDE	1	27.2	12.1	F	1.00	2.25		1.20	1.20	2.74	2.74	2.74	2.74	**138**
Position 3 - RRUS														
RRUS 11 exposed FRONT	1	17.0	9.2	F	1.00	1.85		1.20	1.20	1.30	1.30	1.30		
4426 B66 exposed FRONT	1	14.96	5.8	F	1.00	2.58		1.20	1.20	0.73	0.73	2.03	2.03	**102**
RRUS 11 exposed SIDE	1	17.0	17.8	F	1.00	1.05		1.20	1.20	2.52	2.52	2.52		
4426 B66 exposed SIDE	0	14.96	13.2	F	1.00	1.13		1.20	1.20	1.64	0.00	2.52	2.52	**127**
Position 4 - RRUS														
4415 B25 exposed FRONT	1	14.96	5.4	F	1.00	2.78		1.21	1.21	0.68	0.68	0.68	0.68	**34**
4415 B25 exposed SIDE	1	14.96	13.19	F	1.00	1.13		1.20	1.20	1.64	1.64	1.64	1.64	**83**

Antenna Loads at Varying θ

Description (optional)	θ = 0°	θ =	θ =	θ =	θ = 90°
** Enter Fa (Front & Side) from above **	FRONT	30	45	60	SIDE

Wind force Fa (lbs)

Mount member UDL's

Member width (in)	(F)lat (R)ound	UDL (lbs/ft)
3.00	F	**25**
3.50	R	**18**
2.38	R	**12**
2.88	R	**15**
4.50	R	**23**

Microwave Dish Wind Loads

Diameter dish (in)	Dish Type: P / PR / CS / G	Max Ca	Fa (lbs)

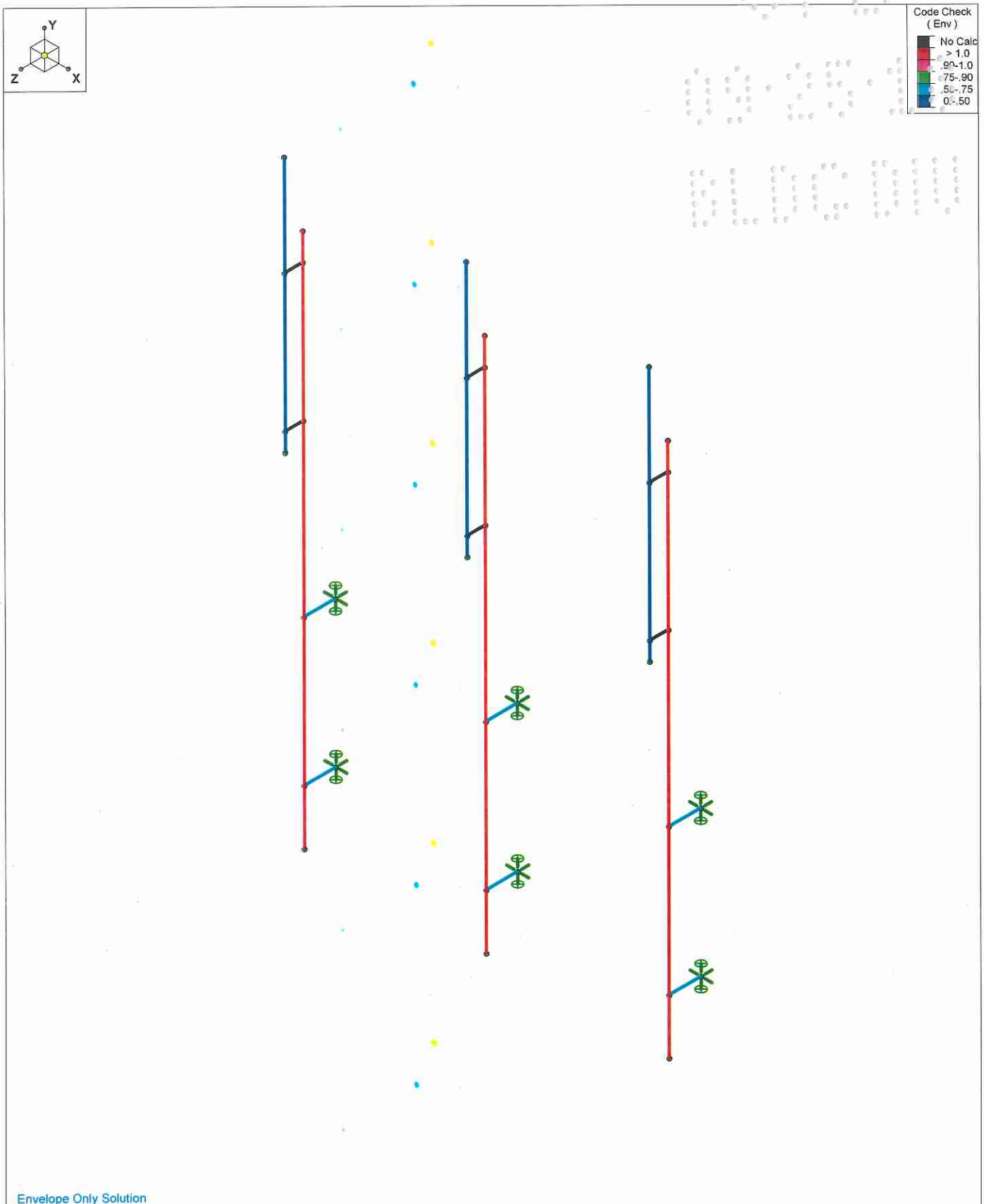

Envelope Only Solution

USA Engineering, Inc.	Alpha Mount	SK - 1
Nicole Hoffman, EI		Apr 25, 2018 at 2:10 PM
M112_10069958		Alpha Mount.r3d

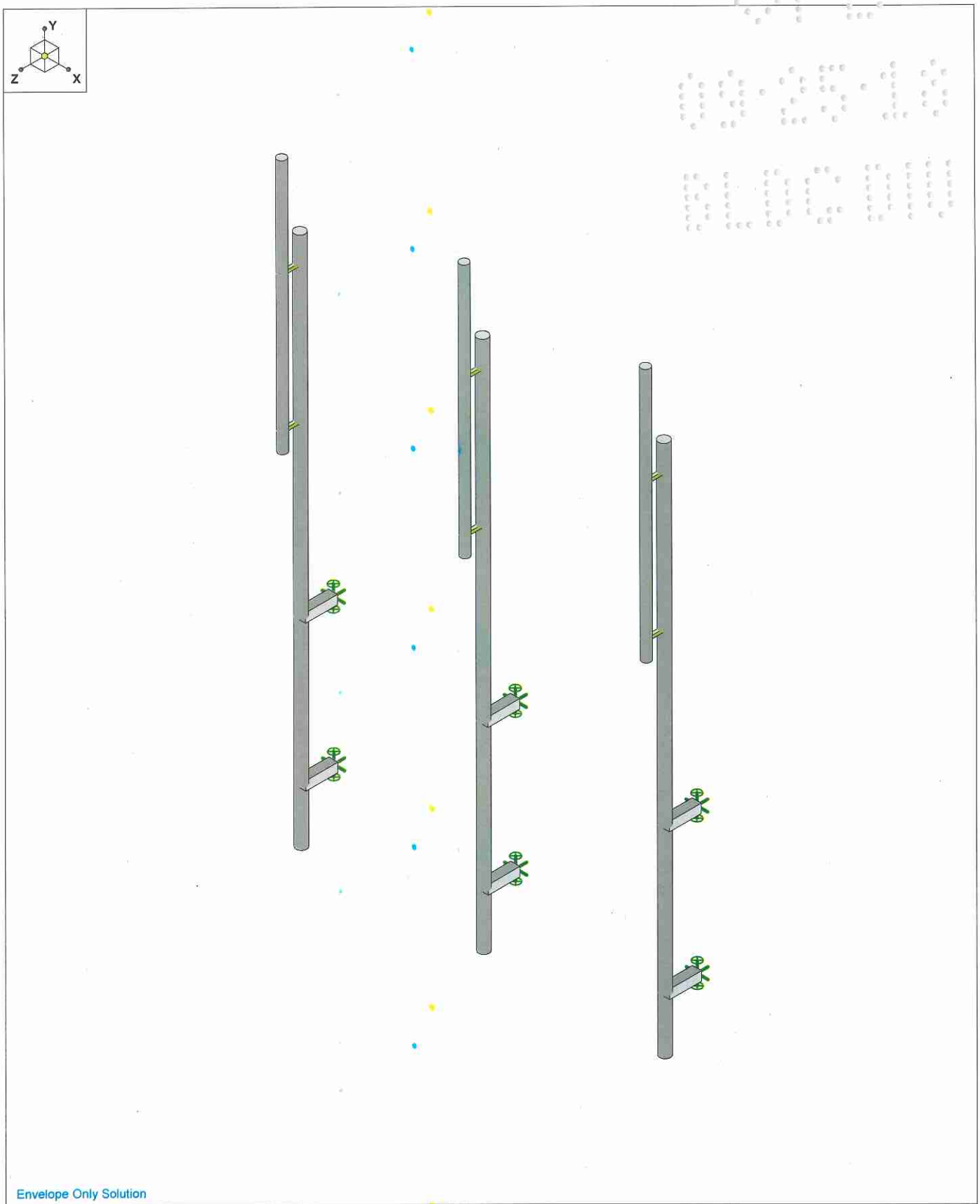

Envelope Only Solution

USA Engineering, Inc.	Alpha Mount	SK - 2
Nicole Hoffman, EI		Apr 25, 2018 at 2:10 PM
M112_10069958		Alpha Mount.r3d

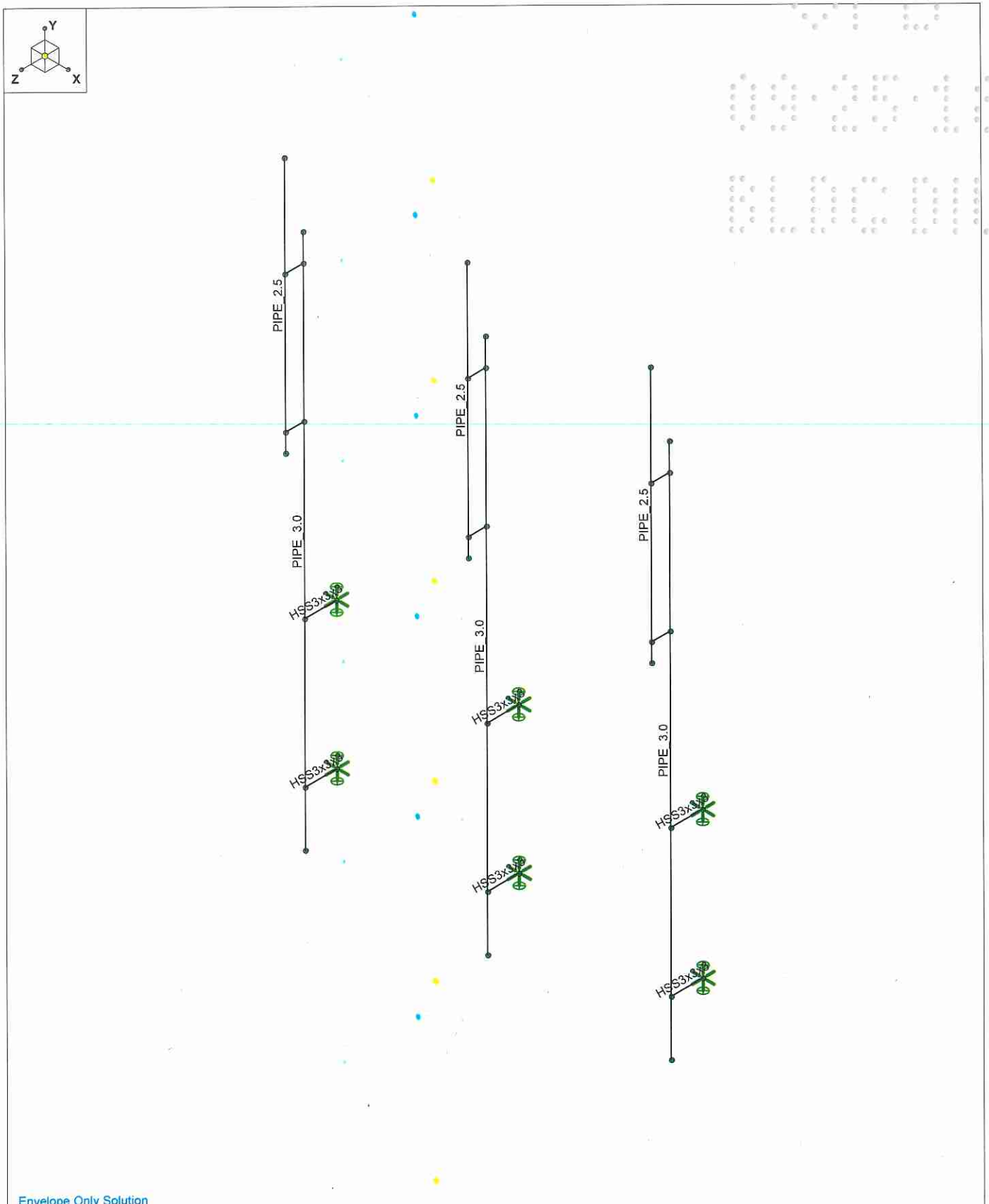

Envelope Only Solution

USA Engineering, Inc.	Alpha Mount	SK - 3
Nicole Hoffman, EI		Apr 25, 2018 at 2:10 PM
M112_10069958		Alpha Mount.r3d

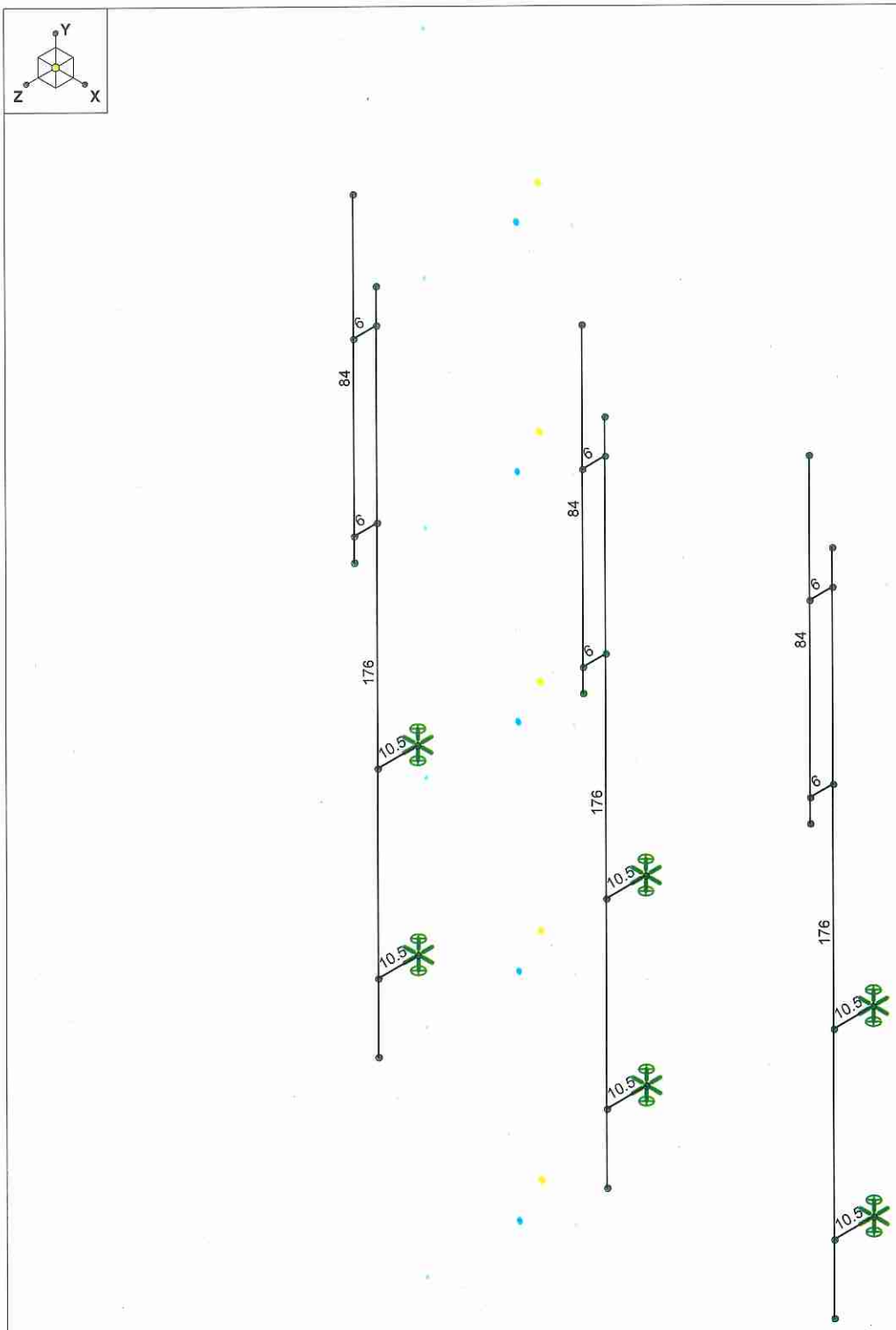

Member Length (in) Displayed
Envelope Only Solution

USA Engineering, Inc.	Alpha Mount	SK - 4
Nicole Hoffman, EI		Apr 25, 2018 at 2:10 PM
M112_10069958		Alpha Mount.r3d

(Global) Model Settings

Display Sections for Member Calcs	5
Max Internal Sections for Member Calcs	97
Include Shear Deformation?	Yes
Increase Nailing Capacity for Wind?	Yes
Include Warping?	Yes
Trans Load Btwn Intersecting Wood Wall?	Yes
Area Load Mesh (in^2)	144
Merge Tolerance (in)	.12
P-Delta Analysis Tolerance	0.50%
Include P-Delta for Walls?	Yes
Automatically Iterate Stiffness for Walls?	Yes
Max Iterations for Wall Stiffness	3
Gravity Acceleration (in/sec^2)	386.4
Wall Mesh Size (in)	12
Eigensolution Convergence Tol. (1.E-)	4
Vertical Axis	Y
Global Member Orientation Plane	XZ
Static Solver	Sparse Accelerated
Dynamic Solver	Accelerated Solver

Hot Rolled Steel Code	AISC 14th(360-10): LRFD
Adjust Stiffness?	Yes(Iterative)
RISAConnection Code	AISC 14th(360-10): LRFD
Cold Formed Steel Code	AISI S100-16: LRFD
Wood Code	AF&PA NDS-05/08: ASD
Wood Temperature	< 100F
Concrete Code	ACI 318-11
Masonry Code	ACI 530-08: ASD
Aluminum Code	AA ADM1-05: ASD - Building
	AISC 14th(360-10): LRFD

Number of Shear Regions	4
Region Spacing Increment (in)	4
Biaxial Column Method	Exact Integration
Parme Beta Factor (PCA)	.65
Concrete Stress Block	Rectangular
Use Cracked Sections?	Yes
Use Cracked Sections Slab?	Yes
Bad Framing Warnings?	No
Unused Force Warnings?	Yes
Min 1 Bar Diam. Spacing?	No
Concrete Rebar Set	REBAR_SET_ASTMA615
Min % Steel for Column	1
Max % Steel for Column	8

(Global) Model Settings, Continued

Seismic Code	ASCE 7-10
Seismic Base Elevation (in)	Not Entered
Add Base Weight?	Yes
Ct X	.02
Ct Z	.02
T X (sec)	Not Entered
T Z (sec)	Not Entered
R X	3
R Z	3
Ct Exp. X	.75
Ct Exp. Z	.75
SD1	1
SDS	1
S1	1
TL (sec)	5
Risk Cat	I or II
Drift Cat	Other
Om Z	1
Om X	1
Cd Z	1
Cd X	1
Rho Z	1
Rho X	1

Joint Coordinates and Temperatures

	Label	X [in]	Y [in]	Z [in]	Temp [F]	Detach From Diaphragm
1	N1	-12	0	0	0	
2	N2	-12	176	0	0	
3	N3	-12	18	0	0	
4	N4	-12	66	0	0	
5	N5	-12	167	0	0	
6	N6	-12	122	0	0	
7	N7	-12	167	6	0	
8	N8	-12	122	6	0	
9	N9	-12	200	6	0	
10	N10	-12	116	6	0	
11	N11	-12	18	-10.5	0	
12	N12	-12	66	-10.5	0	
13	N13	48	0	0	0	
14	N14	48	176	0	0	
15	N15	48	18	0	0	
16	N16	48	66	0	0	
17	N17	48	167	0	0	
18	N18	48	122	0	0	
19	N19	48	167	6	0	
20	N20	48	122	6	0	
21	N21	48	200	6	0	
22	N22	48	116	6	0	
23	N23	48	18	-10.5	0	
24	N24	48	66	-10.5	0	
25	N25	108	0	0	0	
26	N26	108	176	0	0	
27	N27	108	18	0	0	
28	N28	108	66	0	0	
29	N29	108	167	0	0	
30	N30	108	122	0	0	

Joint Coordinates and Temperatures (Continued)

	Label	X [in]	Y [in]	Z [in]	Temp [F]	Detach From Diaphragm
31	N31	108	167	6	0	
32	N32	108	122	6	0	
33	N33	108	200	6	0	
34	N34	108	116	6	0	
35	N35	108	18	-10.5	0	
36	N36	108	66	-10.5	0	

Joint Boundary Conditions

	Joint Label	X [k/in]	Y [k/in]	Z [k/in]	X Rot.[k-ft/rad]	Y Rot.[k-ft/rad]	Z Rot.[k-ft/rad]
1	N12	Reaction	Reaction	Reaction		Reaction	
2	N11	Reaction	Reaction	Reaction		Reaction	
3	N23	Reaction	Reaction	Reaction		Reaction	
4	N24	Reaction	Reaction	Reaction		Reaction	
5	N35	Reaction	Reaction	Reaction		Reaction	
6	N36	Reaction	Reaction	Reaction		Reaction	

Hot Rolled Steel Properties

	Label	E [ksi]	G [ksi]	Nu	Therm (\1E5 F)	Density[k/ft^3]	Yield[ksi]	Ry	Fu[ksi]	Rt
1	A36 Gr.36	29000	11154	.3	.65	.49	36	1.5	58	1.2
2	A572 Gr.50	29000	11154	.3	.65	.49	50	1.1	65	1.1
3	A992	29000	11154	.3	.65	.49	50	1.1	65	1.1
4	A500 Gr.42	29000	11154	.3	.65	.49	42	1.4	58	1.3
5	A500 Gr.46	29000	11154	.3	.65	.49	46	1.4	58	1.3
6	A53 Gr.B	29000	11154	.3	.65	.49	35	1.6	60	1.2

Member Primary Data

	Label	I Joint	J Joint	K Joint	Rotate(d...	Section/Shape	Type	Design List	Material	Design Rules
1	M1	N4	N12			HSS3x3x3	Beam	SquareTube	A500 Gr.46	Typical
2	M2	N3	N11			HSS3x3x3	Beam	SquareTube	A500 Gr.46	Typical
3	M3	N2	N1			PIPE_3.0	Beam	Pipe	A53 Gr.B	Typical
4	A1	N9	N10			PIPE_2.5	Beam	Pipe	A53 Gr.B	Typical
5	M5	N7	N5			RIGID	None	None	RIGID	Typical
6	M6	N8	N6			RIGID	None	None	RIGID	Typical
7	M7	N16	N24			HSS3x3x3	Beam	SquareTube	A500 Gr.46	Typical
8	M8	N15	N23			HSS3x3x3	Beam	SquareTube	A500 Gr.46	Typical
9	M9	N14	N13			PIPE_3.0	Beam	Pipe	A53 Gr.B	Typical
10	A3	N21	N22			PIPE_2.5	Beam	Pipe	A53 Gr.B	Typical
11	M11	N19	N17			RIGID	None	None	RIGID	Typical
12	M12	N20	N18			RIGID	None	None	RIGID	Typical
13	M13	N28	N36			HSS3x3x3	Beam	SquareTube	A500 Gr.46	Typical
14	M14	N27	N35			HSS3x3x3	Beam	SquareTube	A500 Gr.46	Typical
15	M15	N26	N25			PIPE_3.0	Beam	Pipe	A53 Gr.B	Typical
16	A4	N33	N34			PIPE_2.5	Beam	Pipe	A53 Gr.B	Typical
17	M17	N31	N29			RIGID	None	None	RIGID	Typical
18	M18	N32	N30			RIGID	None	None	RIGID	Typical

Member Advanced Data

	Label	I Release	J Release	I Offset[in]	J Offset[in]	T/C Only	Physical	Analysis ...	Inactive	Seismic Design ...
1	M1						Yes			None
2	M2						Yes			None
3	M3						Yes			None

Member Advanced Data (Continued)

	Label	I Release	J Release	I Offset[in]	J Offset[in]	T/C Only	Physical	Analysis ...	Inactive	Seismic Design ...
4	A1						Yes			None
5	M5						Yes			None
6	M6						Yes			None
7	M7						Yes			None
8	M8						Yes			None
9	M9						Yes			None
10	A3						Yes			None
11	M11						Yes			None
12	M12						Yes			None
13	M13						Yes			None
14	M14						Yes			None
15	M15						Yes			None
16	A4						Yes			None
17	M17						Yes			None
18	M18						Yes			None

Hot Rolled Steel Design Parameters

	Label	Shape	Length[in]	Lbyy[in]	Lbzz[in]	Lcomp top[in]	Lcomp bot[in]	L-torq...	Kyy	Kzz	Cb	Function
1	M1	HSS3x3x3	10.5			Lbyy						Lateral
2	M2	HSS3x3x3	10.5			Lbyy						Lateral
3	M3	PIPE_3.0	176			Lbyy						Lateral
4	A1	PIPE_2.5	84			Lbyy						Lateral
5	M7	HSS3x3x3	10.5			Lbyy						Lateral
6	M8	HSS3x3x3	10.5			Lbyy						Lateral
7	M9	PIPE_3.0	176			Lbyy						Lateral
8	A3	PIPE_2.5	84			Lbyy						Lateral
9	M13	HSS3x3x3	10.5			Lbyy						Lateral
10	M14	HSS3x3x3	10.5			Lbyy						Lateral
11	M15	PIPE_3.0	176			Lbyy						Lateral
12	A4	PIPE_2.5	84			Lbyy						Lateral

Basic Load Cases

	BLC Description	Category	...	Y Grav...	Z Grav...	Joint	Point	Distribut...	Area(Mem...	Surface(Plate/Wall)
1	DEAD LOAD	DL		-1			9			
2	LIVE LOAD (Lv)	LL								
3	WIND FRONT	WLZ					9	9		
4	WIND SIDE	WLX					9	9		
5	Wind Front @ 30 ...	WLZ					9	9		
6	Wind Side @ 30 ...	WLX					9	9		
7	UDL	LL								
8	LIVE LOAD (Lm)	LL				1				

Load Combinations

	Description	Sol...	PD...	SR...	B...	Fa...	B...	Fa...	B...	Fa...	B...	Fa...	B...	Fa...	B...	Fa...	B...	Fa...	B...	Fa...	B...	Fa...	B...	Fa...
1	DEAD LOAD	Yes	Y		1	1																		
2	1.4 DEAD LOAD	Yes	Y		1	1.4																		
3	Dead + Lv	Yes	Y		1	1	2	1																
4	1.2 DEAD LOAD + 1.5 Lv	Yes	Y		1	1.2	2	1.5																
5	DEAD LOAD + UDL	Yes	Y		1	1											7	1						
6	1.2 DEAD LOAD + 1.5 UDL	Yes	Y		1	1.2											7	1.5						
7	1.2 DEAD LOAD + 1.6 WIND 0	Yes	Y		1	1.2			3	1.6														
8	1.2 DEAD LOAD + 1.6 WIND 30	Yes	Y		1	1.2			3	1.39	4	.8												

Load Combinations (Continued)

	Description	Sol...	PD...	SR...	B...	Fa...	B...	Fa...	B...	Fa...	B...	Fa...	B...	Fa...	B...	Fa...	B...	Fa...	B...	Fa...	B...	Fa...	B...	Fa...
9	1.2 DEAD LOAD + 1.6 WIND 60	Yes	Y		1	1.2			3	.8	4	1.39												
10	1.2 DEAD LOAD + 1.6 WIND 90	Yes	Y		1	1.2					4	1.6												
11	1.2 DEAD LOAD + 1.6 WIND 120	Yes	Y		1	1.2			3	-.8	4	1.39												
12	1.2 DEAD LOAD + 1.6 WIND 150	Yes	Y		1	1.2			3	-1....	4	.8												
13	1.2 DEAD LOAD + 1.6 WIND 180	Yes	Y		1	1.2			3	-1.6														
14	1.2 DEAD LOAD + 1.6 WIND 210	Yes	Y		1	1.2			3	-1....	4	-.8												
15	1.2 DEAD LOAD + 1.6 WIND 240	Yes	Y		1	1.2			3	-.8	4	-1....												
16	1.2 DEAD LOAD + 1.6 WIND 270	Yes	Y		1	1.2					4	-1.6												
17	1.2 DEAD LOAD + 1.6 WIND 300	Yes	Y		1	1.2			3	.8	4	-1....												
18	1.2 DEAD LOAD + 1.6 WIND 330	Yes	Y		1	1.2			3	1.39	4	-.8												
19	0.9 DEAD LOAD + 1.6 WIND 0	Yes	Y		1	.9			3	1.6														
20	0.9 DEAD LOAD + 1.6 WIND 30	Yes	Y		1	.9			3	1.39	4	.8												
21	0.9 DEAD LOAD + 1.6 WIND 60	Yes	Y		1	.9			3	.8	4	1.39												
22	0.9 DEAD LOAD + 1.6 WIND 90	Yes	Y		1	.9					4	1.6												
23	0.9 DEAD LOAD + 1.6 WIND 120	Yes	Y		1	.9			3	-.8	4	1.39												
24	0.9 DEAD LOAD + 1.6 WIND 150	Yes	Y		1	.9			3	-1....	4	.8												
25	0.9 DEAD LOAD + 1.6 WIND 180	Yes	Y		1	.9			3	-1.6														
26	0.9 DEAD LOAD + 1.6 WIND 210	Yes	Y		1	.9			3	-1....	4	-.8												
27	0.9 DEAD LOAD + 1.6 WIND 240	Yes	Y		1	.9			3	-.8	4	-1....												
28	0.9 DEAD LOAD + 1.6 WIND 270	Yes	Y		1	.9					4	-1.6												
29	0.9 DEAD LOAD + 1.6 WIND 300	Yes	Y		1	.9			3	.8	4	-1....												
30	0.9 DEAD LOAD + 1.6 WIND 330	Yes	Y		1	.9			3	1.39	4	-.8												
31	1.2 DEAD LOAD + 1.5 LIVE LOA...	Yes	Y		1	1.2							5	1					8	1.5				
32	1.2 DEAD LOAD + 1.5 LIVE LOA...	Yes	Y		1	1.2							5	.869	6	.5			8	1.5				
33	1.2 DEAD LOAD + 1.5 LIVE LOA...	Yes	Y		1	1.2							5	.5	6	.869			8	1.5				
34	1.2 DEAD LOAD + 1.5 LIVE LOA...	Yes	Y		1	1.2									6	1			8	1.5				
35	1.2 DEAD LOAD + 1.5 LIVE LOA...	Yes	Y		1	1.2							5	-.5	6	.869			8	1.5				
36	1.2 DEAD LOAD + 1.5 LIVE LOA...	Yes	Y		1	1.2							5	-.8...	6	.5			8	1.5				
37	1.2 DEAD LOAD + 1.5 LIVE LOA...	Yes	Y		1	1.2							5	-1					8	1.5				
38	1.2 DEAD LOAD + 1.5 LIVE LOA...	Yes	Y		1	1.2							5	-.8...	6	-.5			8	1.5				
39	1.2 DEAD LOAD + 1.5 LIVE LOA...	Yes	Y		1	1.2							5	-.5	6	-.8...			8	1.5				
40	1.2 DEAD LOAD + 1.5 LIVE LOA...	Yes	Y		1	1.2									6	-1			8	1.5				
41	1.2 DEAD LOAD + 1.5 LIVE LOA...	Yes	Y		1	1.2							5	.5	6	-.8...			8	1.5				
42	1.2 DEAD LOAD + 1.5 LIVE LOA...	Yes	Y		1	1.2							5	.869	6	-.5			8	1.5				
43	0.9 DEAD LOAD + 1.5 LIVE LOA...	Yes	Y		1	.9							5	1					8	1.5				
44	0.9 DEAD LOAD + 1.5 LIVE LOA...	Yes	Y		1	.9							5	.869	6	.5			8	1.5				
45	0.9 DEAD LOAD + 1.5 LIVE LOA...	Yes	Y		1	.9							5	.5	6	.869			8	1.5				
46	0.9 DEAD LOAD + 1.5 LIVE LOA...	Yes	Y		1	.9									6	1			8	1.5				
47	0.9 DEAD LOAD + 1.5 LIVE LOA...	Yes	Y		1	.9							5	-.5	6	.869			8	1.5				
48	0.9 DEAD LOAD + 1.5 LIVE LOA...	Yes	Y		1	.9							5	-.8...	6	.5			8	1.5				
49	0.9 DEAD LOAD + 1.5 LIVE LOA...	Yes	Y		1	.9							5	-1					8	1.5				
50	0.9 DEAD LOAD + 1.5 LIVE LOA...	Yes	Y		1	.9							5	-.8...	6	-.5			8	1.5				
51	0.9 DEAD LOAD + 1.5 LIVE LOA...	Yes	Y		1	.9							5	-.5	6	-.8...			8	1.5				
52	0.9 DEAD LOAD + 1.5 LIVE LOA...	Yes	Y		1	.9									6	-1			8	1.5				
53	0.9 DEAD LOAD + 1.5 LIVE LOA...	Yes	Y		1	.9							5	.5	6	-.8...			8	1.5				
54	0.9 DEAD LOAD + 1.5 LIVE LOA...	Yes	Y		1	.9							5	.869	6	-.5			8	1.5				

Joint Loads and Enforced Displacements (BLC 8 : LIVE LOAD (Lm))

	Joint Label	L,D,M	Direction	Magnitude[(k,k-ft), (in,rad), (k*s^2/in, k*s...
1	N9	L	Y	-.5

Member Point Loads (BLC 1 : DEAD LOAD)

	Member Label	Direction	Magnitude[k,k-ft]	Location[in,%]
1	A1	Y	-.05	%5
2	A3	Y	-.05	%5
3	A4	Y	-.05	%5
4	A1	Y	-.05	%95
5	A3	Y	-.05	%95
6	A4	Y	-.05	%95
7	M3	Y	-.1	%55
8	M9	Y	-.12	%55
9	M15	Y	-.06	%55

Member Point Loads (BLC 3 : WIND FRONT)

	Member Label	Direction	Magnitude[k,k-ft]	Location[in,%]
1	A1	Z	-.274	%5
2	A3	Z	-.274	%5
3	A4	Z	-.274	%5
4	A1	Z	-.274	%95
5	A3	Z	-.274	%95
6	A4	Z	-.274	%95
7	M3	Z	-.084	%55
8	M9	Z	-.102	%55
9	M15	Z	-.034	%55

Member Point Loads (BLC 4 : WIND SIDE)

	Member Label	Direction	Magnitude[k,k-ft]	Location[in,%]
1	A1	X	-.218	%5
2	A3	X	-.218	%5
3	A4	X	-.218	%5
4	A1	X	-.218	%95
5	A3	X	-.218	%95
6	A4	X	-.218	%95
7	M3	X	-.138	%55
8	M9	X	-.127	%55
9	M15	X	-.083	%55

Member Point Loads (BLC 5 : Wind Front @ 30 mph)

	Member Label	Direction	Magnitude[k,k-ft]	Location[in,%]
1	A1	Z	-.013	%5
2	A3	Z	-.013	%5
3	A4	Z	-.013	%5
4	A1	Z	-.013	%95
5	A3	Z	-.013	%95
6	A4	Z	-.013	%95
7	M3	Z	-.004	%55
8	M9	Z	-.005	%55
9	M15	Z	-.002	%55

Member Point Loads (BLC 6 : Wind Side @ 30 mph)

	Member Label	Direction	Magnitude[k,k-ft]	Location[in,%]
1	A1	X	-.011	%5
2	A3	X	-.011	%5
3	A4	X	-.011	%5
4	A1	X	-.011	%95
5	A3	X	-.011	%95
6	A4	X	-.011	%95

Member Point Loads (BLC 6 : Wind Side @ 30 mph) (Continued)

	Member Label	Direction	Magnitude[k,k-ft]	Location[in,%]
7	M3	X	-.007	%55
8	M9	X	-.006	%55
9	M15	X	-.004	%55

Member Distributed Loads (BLC 3 : WIND FRONT)

	Member Label	Direction	Start Magnitude[k/ft,F,ksf]	End Magnitude[k/ft,F,ksf]	Start Loca...	End Location[in,...
1	M1	PZ	-.025	-.025	0	0
2	M2	PZ	-.025	-.025	0	0
3	M7	PZ	-.025	-.025	0	0
4	M8	PZ	-.025	-.025	0	0
5	M13	PZ	-.025	-.025	0	0
6	M14	PZ	-.025	-.025	0	0
7	M3	PZ	-.018	-.018	0	0
8	M9	PZ	-.018	-.018	0	0
9	M15	PZ	-.018	-.018	0	0

Member Distributed Loads (BLC 4 : WIND SIDE)

	Member Label	Direction	Start Magnitude[k/ft,F,ksf]	End Magnitude[k/ft,F,ksf]	Start Loca...	End Location[in,...
1	M1	PX	-.025	-.025	0	0
2	M2	PX	-.025	-.025	0	0
3	M7	PX	-.025	-.025	0	0
4	M8	PX	-.025	-.025	0	0
5	M13	PX	-.025	-.025	0	0
6	M14	PX	-.025	-.025	0	0
7	M3	PX	-.018	-.018	0	0
8	M9	PX	-.018	-.018	0	0
9	M15	PX	-.018	-.018	0	0

Member Distributed Loads (BLC 5 : Wind Front @ 30 mph)

	Member Label	Direction	Start Magnitude[k/ft,F,ksf]	End Magnitude[k/ft,F,ksf]	Start Loca...	End Location[in,...
1	M1	PZ	-.001	-.001	0	0
2	M2	PZ	-.001	-.001	0	0
3	M7	PZ	-.001	-.001	0	0
4	M8	PZ	-.001	-.001	0	0
5	M13	PZ	-.001	-.001	0	0
6	M14	PZ	-.001	-.001	0	0
7	M3	PZ	-.000882	-.000882	0	0
8	M9	PZ	-.000882	-.000882	0	0
9	M15	PZ	-.000882	-.000882	0	0

Member Distributed Loads (BLC 6 : Wind Side @ 30 mph)

	Member Label	Direction	Start Magnitude[k/ft,F,ksf]	End Magnitude[k/ft,F,ksf]	Start Loca...	End Location[in,...
1	M1	PX	-.001	-.001	0	0
2	M2	PX	-.001	-.001	0	0
3	M7	PX	-.001	-.001	0	0
4	M8	PX	-.001	-.001	0	0
5	M13	PX	-.001	-.001	0	0
6	M14	PX	-.001	-.001	0	0
7	M3	PX	-.000882	-.000882	0	0
8	M9	PX	-.000882	-.000882	0	0
9	M15	PX	-.000882	-.000882	0	0

Member Area Loads

Joint A	Joint B	Joint C	Joint D	Direction	Distribution	Magnitude[ksf]
No Data to Print ...						

Envelope Joint Reactions

	Joint		X [k]	LC	Y [k]	LC	Z [k]	LC	MX [k-ft]	LC	MY [k-ft]	LC	MZ [k-ft]	LC
1	N12	max	2.993	10	4.038	7	3.281	19	0	1	2.567	10	0	1
2		min	-2.993	16	-3.665	25	-3.464	13	0	1	-2.567	16	0	1
3	N11	max	1.582	16	4.055	13	2.033	13	0	1	1.015	16	0	1
4		min	-1.582	10	-3.667	19	-1.849	19	0	1	-1.015	10	0	1
5	N23	max	1.578	16	4.084	13	2.047	13	0	1	1.013	16	0	1
6		min	-1.578	10	-3.675	19	-1.854	19	0	1	-1.013	10	0	1
7	N24	max	2.971	10	4.067	7	3.315	19	0	1	2.55	10	0	1
8		min	-2.971	16	-3.672	25	-3.508	13	0	1	-2.55	16	0	1
9	N35	max	1.556	16	3.989	13	1.999	13	0	1	1.002	16	0	1
10		min	-1.556	10	-3.642	19	-1.834	19	0	1	-1.002	10	0	1
11	N36	max	2.879	10	3.97	7	3.186	19	0	1	2.478	10	0	1
12		min	-2.879	16	-3.642	25	-3.351	13	0	1	-2.478	16	0	1
13	Totals:	max	4.127	10	1.996	31	4.244	7						
14		min	-4.127	16	.935	25	-4.244	25						

Envelope Member Section Deflections Strength

	Member	Sec		x [in]	LC	y [in]	LC	z [in]	LC	x Rotate ...	LC	(n) L/y R...	LC	(n) L/z R...	LC
1	M1	1	max	0	19	.062	19	.023	16	2.07e-02	16	2656.536	22	NC	1
2			min	0	13	-.071	13	-.023	10	-2.07e-02	10	148.411	13	460.377	10
3		2	max	0	19	.042	19	.015	16	2.07e-02	16	3379.419	22	NC	1
4			min	0	13	-.049	13	-.015	10	-2.07e-02	10	214.263	13	707.888	10
5		3	max	0	19	.026	19	.008	16	2.07e-02	16	4907.593	22	NC	1
6			min	0	13	-.031	13	-.008	10	-2.07e-02	10	341.589	13	1355.647	10
7		4	max	0	19	.012	19	.002	16	2.07e-02	16	9630.391	22	NC	1
8			min	0	13	-.015	13	-.002	10	-2.07e-02	10	709.94	13	4223.036	10
9		5	max	0	1	0	1	0	1	2.07e-02	16	NC	1	NC	1
10			min	0	1	0	1	0	1	-2.07e-02	10	NC	1	NC	1
11	M2	1	max	0	13	.058	19	.008	10	9.165e-03	10	2768.596	22	NC	1
12			min	0	19	-.067	13	-.008	16	-9.165e-03	16	157.344	13	1300.658	10
13		2	max	0	13	.048	19	.006	10	9.165e-03	10	3442.22	22	NC	1
14			min	0	19	-.055	13	-.006	16	-9.165e-03	16	192.45	13	1869.458	10
15		3	max	0	13	.034	19	.003	10	9.165e-03	10	4925.2	22	NC	1
16			min	0	19	-.039	13	-.003	16	-9.165e-03	16	272.578	13	3371.858	10
17		4	max	0	13	.017	19	.001	10	9.165e-03	10	9584.519	22	NC	1
18			min	0	19	-.02	13	-.001	16	-9.165e-03	16	527.506	13	9782.764	10
19		5	max	0	1	0	1	0	1	9.165e-03	10	NC	1	NC	1
20			min	0	1	0	1	0	1	-9.165e-03	16	NC	1	NC	1
21	M3	1	max	.068	13	6.588	10	5.799	19	7.042e-03	10	NC	1	NC	1
22			min	-.058	19	-6.588	16	-5.954	13	-7.042e-03	16	NC	1	NC	1
23		2	max	.07	13	3.36	10	2.924	19	6.606e-03	10	NC	1	9331.566	22
24			min	-.061	19	-3.36	16	-3.005	13	-6.606e-03	16	108.644	10	121.739	13
25		3	max	.071	13	.752	10	.519	19	4.24e-03	10	NC	1	5705.282	22
26			min	-.062	19	-.752	16	-.538	13	-4.24e-03	16	67.157	10	73.047	13
27		4	max	.069	13	.174	16	.042	13	1.189e-03	10	NC	1	9525.569	22
28			min	-.06	19	-.174	10	-.041	19	-1.189e-03	16	90.782	10	118.476	13
29		5	max	.067	13	.157	10	.06	13	7.014e-04	16	NC	1	NC	1
30			min	-.058	19	-.157	16	-.051	19	-7.014e-04	10	NC	1	NC	1
31	A1	1	max	.468	13	8.543	10	7.485	19	7.042e-03	10	NC	1	NC	1
32			min	-.448	19	-8.543	16	-7.681	13	-7.042e-03	16	NC	1	NC	1

Envelope Member Section Deflections Strength (Continued)

	Member	Sec		x [in]	LC	y [in]	LC	z [in]	LC	x Rotate ...	LC	(n) L/y R...	LC	(n) L/z R...	LC
33		2	max	.467	13	6.875	10	6.017	19	7.042e-03	10	NC	1	NC	1
34			min	-.448	19	-6.875	16	-6.178	13	-7.042e-03	16	750.338	10	1175.194	13
35		3	max	.467	13	5.276	10	4.627	19	6.93e-03	10	NC	1	NC	1
36			min	-.447	19	-5.276	16	-4.752	13	-6.93e-03	16	541.397	10	1286.07	13
37		4	max	.465	13	3.749	10	3.249	19	6.669e-03	10	NC	1	NC	1
38			min	-.445	19	-3.749	16	-3.338	13	-6.669e-03	16	667.403	10	1814.307	13
39		5	max	.463	13	2.319	10	1.898	19	6.482e-03	10	NC	1	NC	1
40			min	-.444	19	-2.319	16	-1.953	13	-6.482e-03	16	NC	1	NC	1
41	M5	1	max	5.214	19	.448	19	5.951	16	7.544e-02	16	NC	1	NC	1
42			min	-5.354	13	-.467	13	-5.951	10	-7.544e-02	10	NC	1	NC	1
43		2	max	5.214	19	.351	19	5.94	16	7.544e-02	16	NC	1	NC	1
44			min	-5.354	13	-.368	13	-5.94	10	-7.544e-02	10	NC	1	NC	1
45		3	max	5.214	19	.253	19	5.93	16	7.544e-02	16	NC	1	NC	1
46			min	-5.354	13	-.268	13	-5.93	10	-7.544e-02	10	NC	1	NC	1
47		4	max	5.214	19	.156	19	5.919	16	7.544e-02	16	NC	1	NC	1
48			min	-5.354	13	-.168	13	-5.919	10	-7.544e-02	10	NC	1	NC	1
49		5	max	5.214	19	.058	19	5.909	16	7.544e-02	16	NC	1	NC	1
50			min	-5.354	13	-.068	13	-5.909	10	-7.544e-02	10	NC	1	NC	1
51	M6	1	max	2.28	19	.444	19	2.719	16	6.661e-02	16	NC	1	NC	1
52			min	-2.344	13	-.463	13	-2.719	10	-6.661e-02	10	NC	1	NC	1
53		2	max	2.28	19	.348	19	2.709	16	6.661e-02	16	NC	1	NC	1
54			min	-2.344	13	-.365	13	-2.709	10	-6.661e-02	10	NC	1	NC	1
55		3	max	2.28	19	.253	19	2.699	16	6.661e-02	16	NC	1	NC	1
56			min	-2.344	13	-.267	13	-2.699	10	-6.661e-02	10	NC	1	NC	1
57		4	max	2.28	19	.157	19	2.689	16	6.661e-02	16	NC	1	NC	1
58			min	-2.344	13	-.169	13	-2.689	10	-6.661e-02	10	NC	1	NC	1
59		5	max	2.28	19	.062	19	2.68	16	6.661e-02	16	NC	1	NC	1
60			min	-2.344	13	-.071	13	-2.68	10	-6.661e-02	10	NC	1	NC	1
61	M7	1	max	0	19	.062	19	.023	16	2.065e-02	16	4931.463	43	NC	1
62			min	0	13	-.071	13	-.023	10	-2.065e-02	10	147.255	13	463.385	10
63		2	max	0	19	.042	19	.015	16	2.065e-02	16	5584.031	43	NC	1
64			min	0	13	-.049	13	-.015	10	-2.065e-02	10	212.481	13	712.59	10
65		3	max	0	19	.026	19	.008	16	2.065e-02	16	7560.427	43	NC	1
66			min	0	13	-.031	13	-.008	10	-2.065e-02	10	338.602	13	1364.793	10
67		4	max	0	19	.012	19	.002	16	2.065e-02	16	NC	43	NC	1
68			min	0	13	-.015	13	-.002	10	-2.065e-02	10	703.527	13	4252.078	10
69		5	max	0	1	0	1	0	1	2.065e-02	16	NC	1	NC	1
70			min	0	1	0	1	0	1	-2.065e-02	10	NC	1	NC	1
71	M8	1	max	0	13	.058	19	.008	10	9.144e-03	10	5052.78	43	NC	1
72			min	0	19	-.067	13	-.008	16	-9.144e-03	16	156.112	13	1302.394	10
73		2	max	0	13	.048	19	.006	10	9.144e-03	10	6388.168	43	NC	1
74			min	0	19	-.055	13	-.006	16	-9.144e-03	16	190.956	13	1872.398	10
75		3	max	0	13	.034	19	.003	10	9.144e-03	10	9238.44	43	NC	1
76			min	0	19	-.039	13	-.003	16	-9.144e-03	16	270.473	13	3377.838	10
77		4	max	0	13	.018	19	.001	10	9.144e-03	10	NC	31	NC	1
78			min	0	19	-.02	13	-.001	16	-9.144e-03	16	523.442	13	9802.291	10
79		5	max	0	1	0	1	0	1	9.144e-03	10	NC	1	NC	1
80			min	0	1	0	1	0	1	-9.144e-03	16	NC	1	NC	1
81	M9	1	max	.068	13	6.581	10	5.808	19	7.025e-03	10	NC	1	NC	1
82			min	-.059	19	-6.581	16	-5.966	13	-7.025e-03	16	NC	1	NC	1
83		2	max	.071	13	3.356	10	2.929	19	6.59e-03	10	NC	1	NC	32
84			min	-.061	19	-3.356	16	-3.012	13	-6.59e-03	16	108.709	10	121.571	13
85		3	max	.071	13	.75	10	.521	19	4.223e-03	10	NC	1	NC	33
86			min	-.062	19	-.75	16	-.54	13	-4.223e-03	16	67.21	10	72.93	13
87		4	max	.069	13	.173	16	.042	13	1.18e-03	10	NC	1	NC	32
88			min	-.06	19	-.173	10	-.041	19	-1.18e-03	16	90.893	10	118.242	13
89		5	max	.067	13	.157	10	.06	13	7.015e-04	16	NC	1	NC	1

Envelope Member Section Deflections Strength (Continued)

	Member	Sec		x [in]	LC	y [in]	LC	z [in]	LC	x Rotate ...	LC	(n) L/y R...	LC	(n) L/z R...	LC
90			min	-.058	19	-.157	16	-.051	19	-7.015e-04	10	NC	1	NC	1
91	A3	1	max	.469	13	8.535	10	7.496	19	7.025e-03	10	NC	1	NC	1
92			min	-.449	19	-8.535	16	-7.697	13	-7.025e-03	16	NC	1	NC	1
93		2	max	.469	13	6.868	10	6.026	19	7.025e-03	10	NC	1	NC	1
94			min	-.449	19	-6.868	16	-6.191	13	-7.025e-03	16	750.329	10	1175.202	13
95		3	max	.468	13	5.27	10	4.634	19	6.913e-03	10	NC	1	NC	1
96			min	-.448	19	-5.27	16	-4.762	13	-6.913e-03	16	541.386	10	1286.092	13
97		4	max	.466	13	3.745	10	3.254	19	6.652e-03	10	NC	1	NC	1
98			min	-.446	19	-3.745	16	-3.346	13	-6.652e-03	16	667.383	10	1814.238	13
99		5	max	.464	13	2.316	10	1.902	19	6.465e-03	10	NC	1	NC	1
100			min	-.444	19	-2.316	16	-1.958	13	-6.465e-03	16	NC	1	NC	1
101	M11	1	max	5.222	19	.449	19	5.944	16	7.538e-02	16	NC	1	NC	1
102			min	-5.366	13	-.469	13	-5.944	10	-7.538e-02	10	NC	1	NC	1
103		2	max	5.222	19	.351	19	5.934	16	7.538e-02	16	NC	1	NC	1
104			min	-5.366	13	-.369	13	-5.934	10	-7.538e-02	10	NC	1	NC	1
105		3	max	5.222	19	.254	19	5.923	16	7.538e-02	16	NC	1	NC	1
106			min	-5.366	13	-.269	13	-5.923	10	-7.538e-02	10	NC	1	NC	1
107		4	max	5.222	19	.156	19	5.913	16	7.538e-02	16	NC	1	NC	1
108			min	-5.366	13	-.168	13	-5.913	10	-7.538e-02	10	NC	1	NC	1
109		5	max	5.222	19	.059	19	5.902	16	7.538e-02	16	NC	1	NC	1
110			min	-5.366	13	-.068	13	-5.902	10	-7.538e-02	10	NC	1	NC	1
111	M12	1	max	2.284	19	.444	19	2.715	16	6.655e-02	16	NC	1	NC	1
112			min	-2.351	13	-.464	13	-2.715	10	-6.655e-02	10	NC	1	NC	1
113		2	max	2.284	19	.349	19	2.705	16	6.655e-02	16	NC	1	NC	1
114			min	-2.351	13	-.366	13	-2.705	10	-6.655e-02	10	NC	1	NC	1
115		3	max	2.284	19	.253	19	2.695	16	6.655e-02	16	NC	1	NC	1
116			min	-2.351	13	-.268	13	-2.695	10	-6.655e-02	10	NC	1	NC	1
117		4	max	2.284	19	.158	19	2.686	16	6.655e-02	16	NC	1	NC	1
118			min	-2.351	13	-.17	13	-2.686	10	-6.655e-02	10	NC	1	NC	1
119		5	max	2.284	19	.062	19	2.676	16	6.655e-02	16	NC	1	NC	1
120			min	-2.351	13	-.072	13	-2.676	10	-6.655e-02	10	NC	1	NC	1
121	M13	1	max	0	19	.062	19	.022	16	2.039e-02	16	6715.593	43	NC	1
122			min	0	13	-.069	13	-.022	10	-2.039e-02	10	151.109	13	476.511	10
123		2	max	0	19	.042	19	.014	16	2.039e-02	16	7374.069	43	NC	1
124			min	0	13	-.048	13	-.014	10	-2.039e-02	10	218.39	13	733.138	10
125		3	max	0	19	.026	19	.007	16	2.039e-02	16	9820.697	43	NC	1
126			min	0	13	-.03	13	-.007	10	-2.039e-02	10	348.473	13	1404.804	10
127		4	max	0	19	.012	19	.002	16	2.039e-02	16	NC	22	NC	1
128			min	0	13	-.014	13	-.002	10	-2.039e-02	10	724.667	13	4379.333	10
129		5	max	0	1	0	1	0	1	2.039e-02	16	NC	1	NC	1
130			min	0	1	0	1	0	1	-2.039e-02	10	NC	1	NC	1
131	M14	1	max	0	13	.058	19	.008	10	9.036e-03	10	6829.912	43	NC	1
132			min	0	19	-.066	13	-.008	16	-9.036e-03	16	160.219	13	1314.514	10
133		2	max	0	13	.048	19	.006	10	9.036e-03	10	8674.55	43	NC	1
134			min	0	19	-.054	13	-.006	16	-9.036e-03	16	195.94	13	1891.396	10
135		3	max	0	13	.034	19	.003	10	9.036e-03	10	NC	43	NC	1
136			min	0	19	-.038	13	-.003	16	-9.036e-03	16	277.498	13	3414.503	10
137		4	max	0	13	.017	19	.001	10	9.036e-03	10	NC	22	NC	1
138			min	0	19	-.02	13	-.001	16	-9.036e-03	16	537.001	13	9916.4	10
139		5	max	0	1	0	1	0	1	9.036e-03	10	NC	1	NC	1
140			min	0	1	0	1	0	1	-9.036e-03	16	NC	1	NC	1
141	M15	1	max	.066	13	6.537	10	5.778	19	6.954e-03	10	NC	1	NC	1
142			min	-.058	19	-6.537	16	-5.927	13	-6.954e-03	16	NC	1	NC	1
143		2	max	.069	13	3.33	10	2.911	19	6.519e-03	10	NC	1	NC	32
144			min	-.061	19	-3.33	16	-2.989	13	-6.519e-03	16	109.202	10	122.081	13
145		3	max	.07	13	.742	10	.516	19	4.152e-03	10	NC	1	NC	33
146			min	-.062	19	-.742	16	-.533	13	-4.152e-03	16	67.581	10	73.293	13

Envelope Member Section Deflections Strength (Continued)

	Member	Sec		x [in]	LC	y [in]	LC	z [in]	LC	x Rotate ...	LC	(n) L/y R...	LC	(n) L/z R...	LC
147		4	max	.068	13	.171	16	.041	13	1.143e-03	10	NC	1	NC	32
148			min	-.06	19	-.171	10	-.04	19	-1.143e-03	16	91.572	10	113.992	13
149		5	max	.066	13	.155	10	.059	13	6.986e-04	16	NC	1	NC	1
150			min	-.058	19	-.155	16	-.051	19	-6.986e-04	10	NC	1	NC	1
151	A4	1	max	.465	13	8.481	10	7.46	19	6.954e-03	10	NC	1	NC	1
152			min	-.447	19	-8.481	16	-7.648	13	-6.954e-03	16	NC	1	NC	1
153		2	max	.465	13	6.823	10	5.996	19	6.954e-03	10	NC	1	NC	1
154			min	-.447	19	-6.823	16	-6.15	13	-6.954e-03	16	750.378	10	1175.237	13
155		3	max	.464	13	5.233	10	4.61	19	6.842e-03	10	NC	1	NC	1
156			min	-.446	19	-5.233	16	-4.729	13	-6.842e-03	16	541.424	10	1286.117	13
157		4	max	.462	13	3.716	10	3.236	19	6.581e-03	10	NC	1	NC	1
158			min	-.444	19	-3.716	16	-3.321	13	-6.581e-03	16	667.433	10	1814.286	13
159		5	max	.46	13	2.296	10	1.889	19	6.394e-03	10	NC	1	NC	1
160			min	-.442	19	-2.296	16	-1.94	13	-6.394e-03	16	NC	1	NC	1
161	M17	1	max	5.195	19	.447	19	5.904	16	7.498e-02	16	NC	1	NC	1
162			min	-5.329	13	-.465	13	-5.904	10	-7.498e-02	10	NC	1	NC	1
163		2	max	5.195	19	.349	19	5.893	16	7.498e-02	16	NC	1	NC	1
164			min	-5.329	13	-.365	13	-5.893	10	-7.498e-02	10	NC	1	NC	1
165		3	max	5.195	19	.252	19	5.883	16	7.498e-02	16	NC	1	NC	1
166			min	-5.329	13	-.266	13	-5.883	10	-7.498e-02	10	NC	1	NC	1
167		4	max	5.195	19	.155	19	5.872	16	7.498e-02	16	NC	1	NC	1
168			min	-5.329	13	-.166	13	-5.872	10	-7.498e-02	10	NC	1	NC	1
169		5	max	5.195	19	.058	19	5.862	16	7.498e-02	16	NC	1	NC	1
170			min	-5.329	13	-.066	13	-5.862	10	-7.498e-02	10	NC	1	NC	1
171	M18	1	max	2.27	19	.442	19	2.692	16	6.615e-02	16	NC	1	NC	1
172			min	-2.331	13	-.46	13	-2.692	10	-6.615e-02	10	NC	1	NC	1
173		2	max	2.27	19	.347	19	2.683	16	6.615e-02	16	NC	1	NC	1
174			min	-2.331	13	-.363	13	-2.683	10	-6.615e-02	10	NC	1	NC	1
175		3	max	2.27	19	.252	19	2.673	16	6.615e-02	16	NC	1	NC	1
176			min	-2.331	13	-.265	13	-2.673	10	-6.615e-02	10	NC	1	NC	1
177		4	max	2.27	19	.157	19	2.664	16	6.615e-02	16	NC	1	NC	1
178			min	-2.331	13	-.167	13	-2.664	10	-6.615e-02	10	NC	1	NC	1
179		5	max	2.27	19	.061	19	2.654	16	6.615e-02	16	NC	1	NC	1
180			min	-2.331	13	-.07	13	-2.654	10	-6.615e-02	10	NC	1	NC	1

Envelope AISC 14th(360-10): LRFD Steel Code Checks

	Member	Shape	Code Check	Loc[in]	LC	Shear Check	Loc[in]	Dir	LC	phi*Pnc [k]	phi*P...	phi*...	phi*...	...	Eqn
1	M9	PIPE_3.0	1.531	110	13	.165	110		10	20.785	65.205	5.749	5.749	1	H1-...
2	M3	PIPE_3.0	1.524	110	13	.166	110		10	20.785	65.205	5.749	5.749	1	H1-...
3	M15	PIPE_3.0	1.507	110	13	.163	110		10	20.785	65.205	5.749	5.749	1	H1-...
4	M7	HSS3x3x3	.542	0	7	.189	10.5	y	7	77.801	78.246	6.796	6.796	...	H1-...
5	M8	HSS3x3x3	.540	0	13	.191	10.5	y	13	77.801	78.246	6.796	6.796	...	H1-...
6	M1	HSS3x3x3	.538	0	7	.188	10.5	y	7	77.801	78.246	6.796	6.796	...	H1-...
7	M2	HSS3x3x3	.536	0	13	.190	10.5	y	13	77.801	78.246	6.796	6.796	...	H1-...
8	M13	HSS3x3x3	.529	0	7	.185	10.5	y	7	77.801	78.246	6.796	6.796	...	H1-...
9	M14	HSS3x3x3	.528	0	13	.187	10.5	y	13	77.801	78.246	6.796	6.796	...	H1-...
10	A3	PIPE_2.5	.289	32.375	13	.029	5.25		13	33.962	50.715	3.596	3.596	1	H1-...
11	A1	PIPE_2.5	.289	32.375	13	.029	5.25		13	33.962	50.715	3.596	3.596	1	H1-...
12	A4	PIPE_2.5	.289	32.375	13	.029	5.25		13	33.962	50.715	3.596	3.596	1	H1-...

USA ENGINEERING

2818 Cypress Ridge Blvd., Suite 110
Wesley Chapel, FL 33544
(813) 994-0365
www.usa-engineering.com

Existing Beta Mount

Wind on Appurtenances (TIA-222-Rev G)

Site: M112_10069958

USA ENGINEERING

Basic Wind Speeds

Structure: (M)onopole, (S)elf-support, (G)uyed, (A)ppurtenance :	A
h (ft), height of structure from base (only affects Gh for SS) :	46
Structure Class. I, II or III. (typically Class II) :	II
Exposure Category. B, C or D (FL typically is C) :	C
z (ft), AGL elevation of discrete appurtenance :	57
Topographic Category. 1,2,3,4 or 5 (FL typically is 1) :	1
H (ft), height of crest above surrounding terrain :	-
Z (ft), height AGL at the base of the structure :	-
V (mph), Basic Wind Speed, 3-second gust :	136
qz = 0.00256 Kz Kzt Kd V^2 I (psf) :	50.6

Tower type:	*Appurtenance*
Gh :	*1.00*
Kd :	*0.95*
I :	*1.00*
Zg :	*900*
α :	*9.5*
Kz min :	*0.85*
Kz max :	*2.01*
Kz :	*1.12*
Kt :	-
f :	-
Ke :	*1.0*
Kh :	-
Kzt :	*1.00*

Antenna Loads - Front / Side

Description (optional)	# Items	Element Height (in)	Element Width or Diam (in)	Flat or Round (F or R)	Ka	Aspect ratio (A.R.)	C (rounds only)	Ca for element (actual wind)	Ca (max) for A.R. (wind N/A)	EPA per element (sq.ft)	EPA (sq.ft) = CaAa Total (sq.ft)	Σ (cum.)	Σ (for elev)	Fa (lbs)
Position 1, 3 & 4 - Antenna														
ET-X-UW-68-14-65-18-IR-AT FRONT	1	72.0	12.0	F	1.00	6.00		1.36	1.36	8.13	8.13	8.13		
Exposed 2.5" pipe mount FRONT	1	12.0	2.9	R	1.00	4.17	35	0.71	0.74	0.18	0.18	8.31	8.31	**420**
ET-X-UW-68-14-65-18-IR-AT SIDE	1	72.0	6.3	F	1.00	11.43		1.55	1.55	4.88	4.88	4.88		
Exposed 2.5" pipe mount SIDE	1	84.0	2.9	R	1.00	29.17	35	1.11	1.20	2.02	2.02	6.89	6.89	**349**
Position 1 - RRUS														
RRUS 32 exposed FRONT	1	27.2	7.0	F	1.00	3.89		1.26	1.26	1.67	1.67	1.67	1.67	**84**
RRUS 32 exposed SIDE	1	27.2	12.1	F	1.00	2.25		1.20	1.20	2.74	2.74	2.74	2.74	**139**
Position 3 - RRUS														
RRUS 11 exposed FRONT	1	17.0	9.2	F	1.00	1.85		1.20	1.20	1.30	1.30	1.30		
4426 B66 exposed FRONT	1	14.96	5.8	F	1.00	2.58		1.20	1.20	0.73	0.73	2.03	2.03	**103**
RRUS 11 exposed SIDE	1	17.0	17.8	F	1.00	1.05		1.20	1.20	2.52	2.52	2.52		
4426 B66 exposed SIDE	0	14.96	13.2	F	1.00	1.13		1.20	1.20	1.64	0.00	2.52	2.52	**128**
Position 4 - RRUS														
4415 B25 exposed FRONT	1	14.96	5.4	F	1.00	2.78		1.21	1.21	0.68	0.68	0.68	0.68	**34**
4415 B25 exposed SIDE	1	14.96	13.19	F	1.00	1.13		1.20	1.20	1.64	1.64	1.64	1.64	**83**

Antenna Loads at Varying θ

Description (optional)	Wind force Fa (lbs) θ = 0°	θ =	θ =	θ =	θ = 90°
** Enter Fa (Front & Side) from above **	FRONT	30	45	60	SIDE

Mount member UDL's

Member width (in)	(F)lat (R)ound	UDL (lbs/ft)
3.00	F	**25**
3.50	R	**18**
2.38	R	**12**
2.88	R	**15**
4.00	R	**20**

Microwave Dish Wind Loads

Diameter dish (in)	Dish Type: P / PR / CS / G	Max Ca	Fa (lbs)

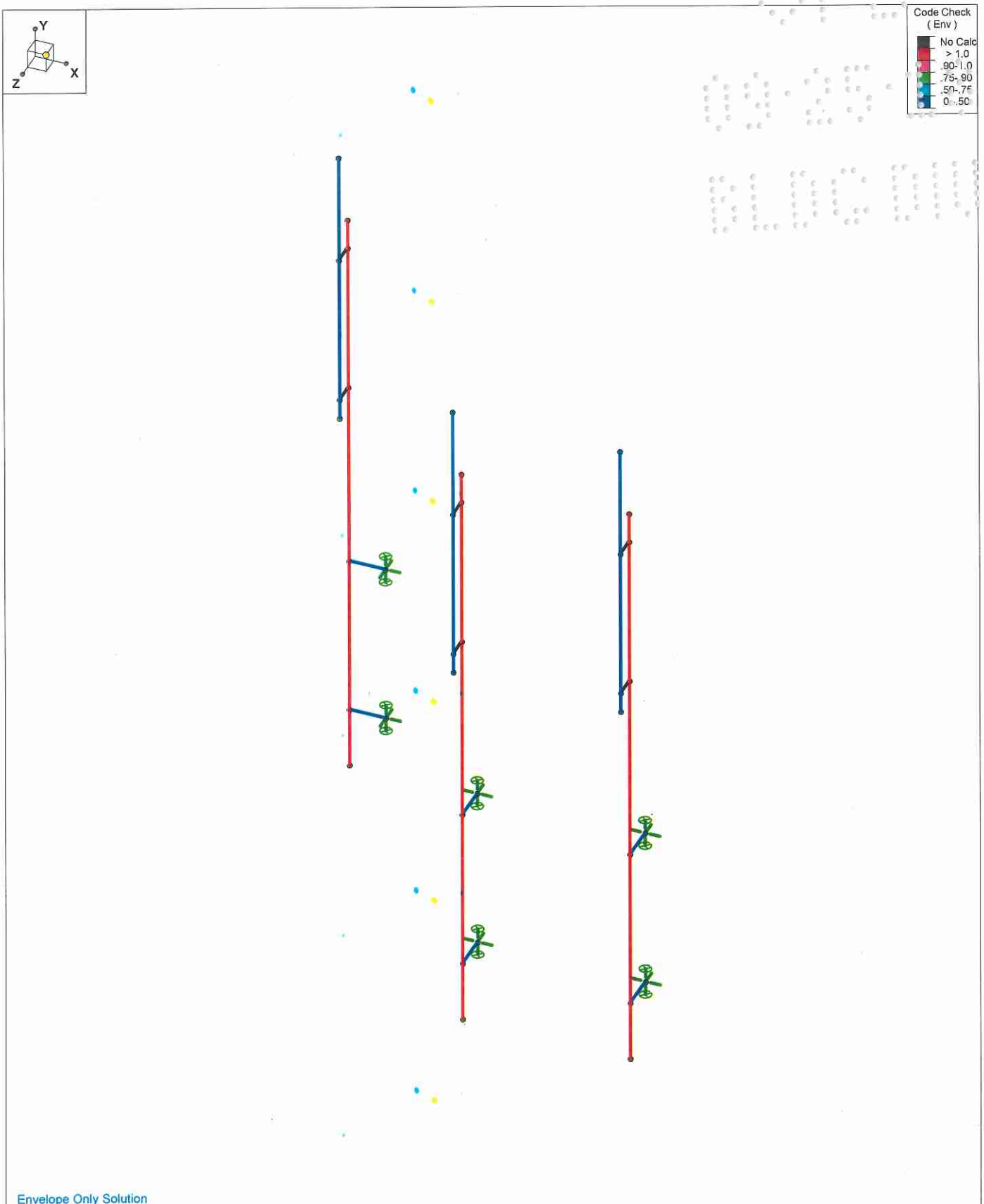

Envelope Only Solution

USA Engineering, Inc.	Beta Mount	SK - 1
Nicole Hoffman, EI		Apr 25, 2018 at 2:32 PM
M112_10069958		Beta Mount.r3d

Envelope Only Solution

USA Engineering, Inc.	Beta Mount	SK - 2
Nicole Hoffman, EI		Apr 25, 2018 at 2:32 PM
M112_10069958		Beta Mount.r3d

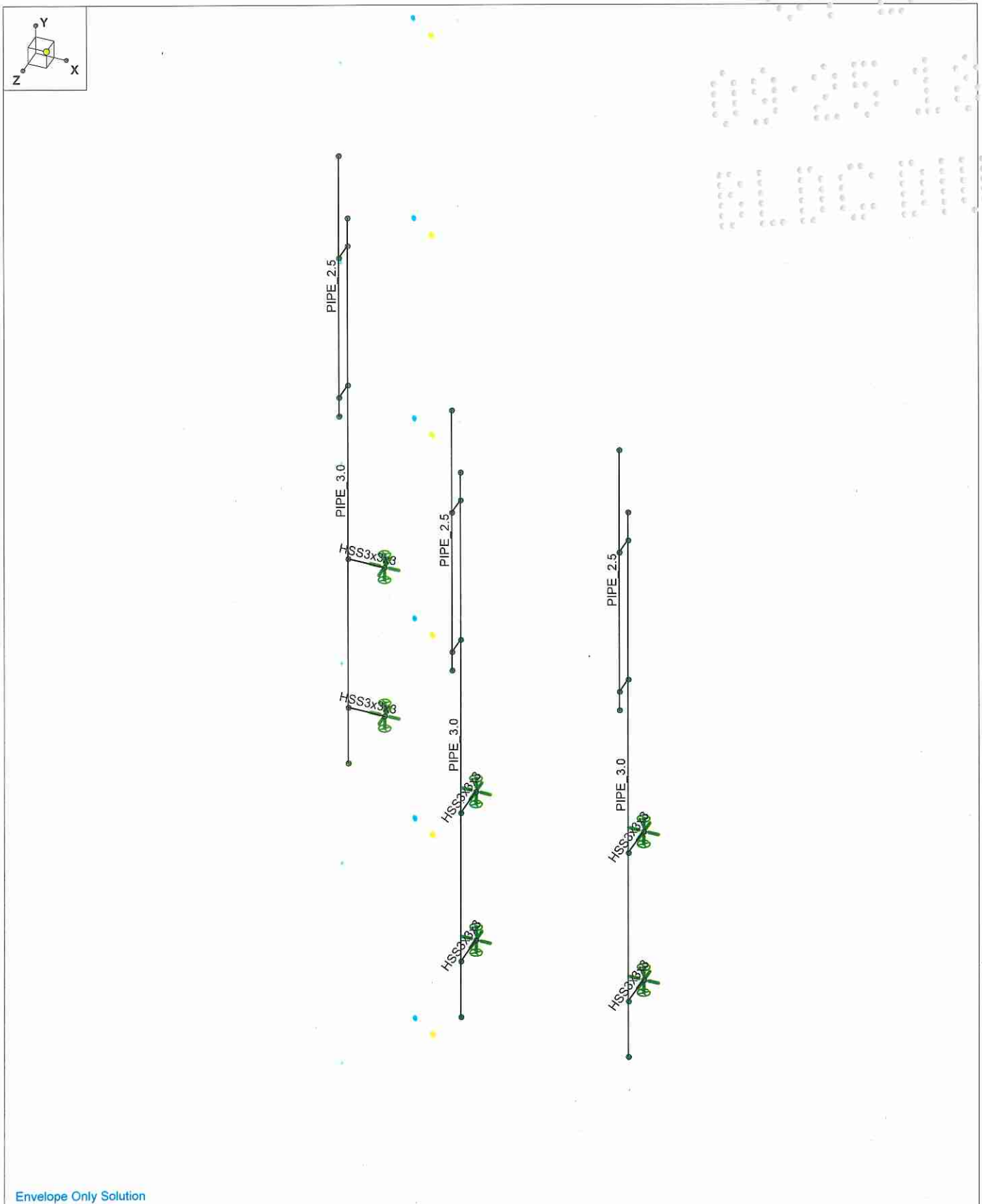

Envelope Only Solution

USA Engineering, Inc.	Beta Mount	SK - 3
Nicole Hoffman, EI		Apr 25, 2018 at 2:32 PM
M112_10069958		Beta Mount.r3d

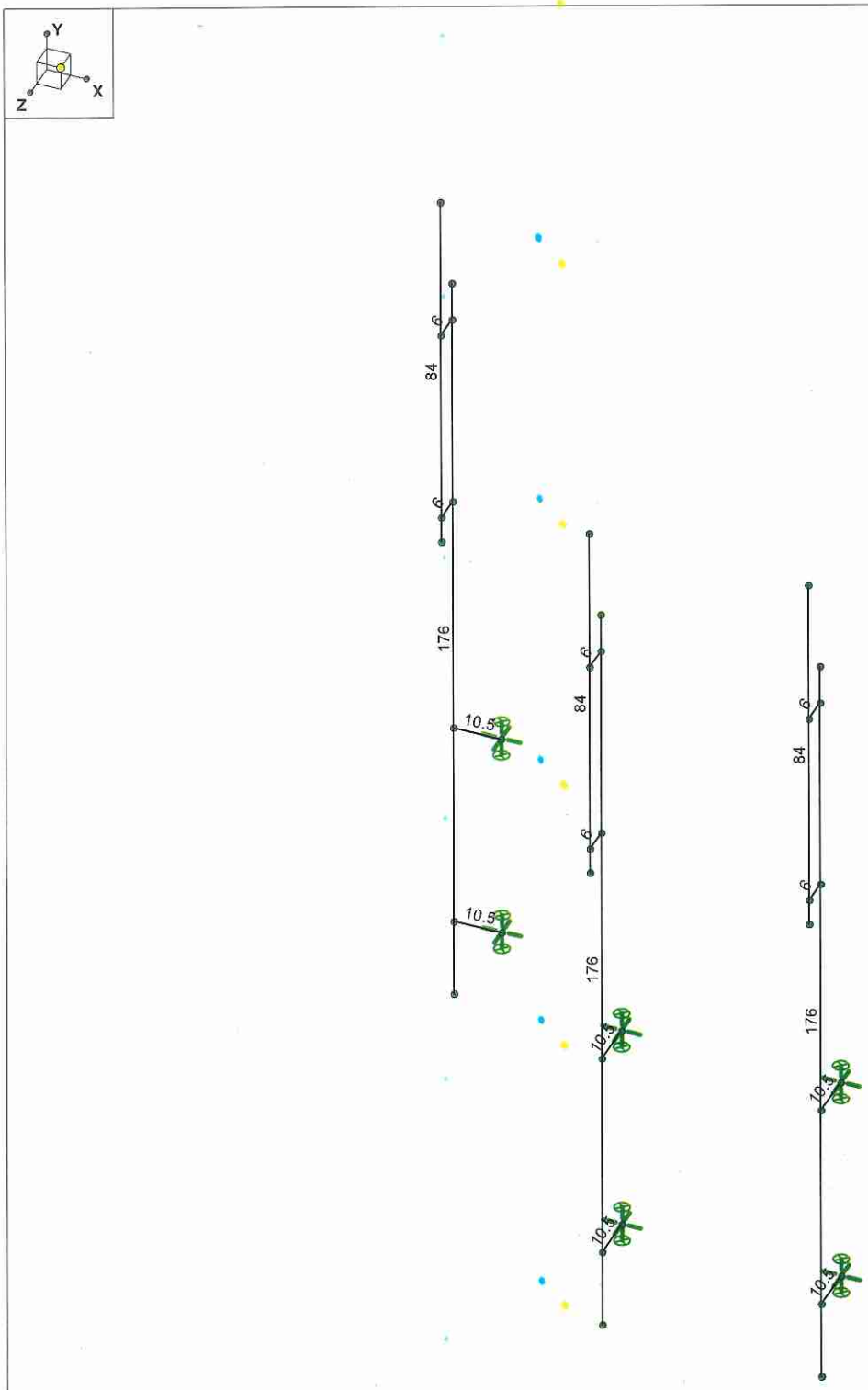

Member Length (in) Displayed
Envelope Only Solution

USA Engineering, Inc.	Beta Mount	SK - 4
Nicole Hoffman, EI		Apr 25, 2018 at 2:32 PM
M112_10069958		Beta Mount.r3d

(Global) Model Settings

Display Sections for Member Calcs	5
Max Internal Sections for Member Calcs	97
Include Shear Deformation?	Yes
Increase Nailing Capacity for Wind?	Yes
Include Warping?	Yes
Trans Load Btwn Intersecting Wood Wall?	Yes
Area Load Mesh (in^2)	144
Merge Tolerance (in)	.12
P-Delta Analysis Tolerance	0.50%
Include P-Delta for Walls?	Yes
Automatically Iterate Stiffness for Walls?	Yes
Max Iterations for Wall Stiffness	3
Gravity Acceleration (in/sec^2)	386.4
Wall Mesh Size (in)	12
Eigensolution Convergence Tol. (1.E-)	4
Vertical Axis	Y
Global Member Orientation Plane	XZ
Static Solver	Sparse Accelerated
Dynamic Solver	Accelerated Solver

Hot Rolled Steel Code	AISC 14th(360-10): LRFD
Adjust Stiffness?	Yes(Iterative)
RISAConnection Code	AISC 14th(360-10): LRFD
Cold Formed Steel Code	AISI S100-16: LRFD
Wood Code	AF&PA NDS-05/08: ASD
Wood Temperature	< 100F
Concrete Code	ACI 318-11
Masonry Code	ACI 530-08: ASD
Aluminum Code	AA ADM1-05: ASD - Building
	AISC 14th(360-10): LRFD

Number of Shear Regions	4
Region Spacing Increment (in)	4
Biaxial Column Method	Exact Integration
Parme Beta Factor (PCA)	.65
Concrete Stress Block	Rectangular
Use Cracked Sections?	Yes
Use Cracked Sections Slab?	Yes
Bad Framing Warnings?	No
Unused Force Warnings?	Yes
Min 1 Bar Diam. Spacing?	No
Concrete Rebar Set	REBAR_SET_ASTMA615
Min % Steel for Column	1
Max % Steel for Column	8

(Global) Model Settings, Continued

Seismic Code	ASCE 7-10
Seismic Base Elevation (in)	Not Entered
Add Base Weight?	Yes
Ct X	.02
Ct Z	.02
T X (sec)	Not Entered
T Z (sec)	Not Entered
R X	3
R Z	3
Ct Exp. X	.75
Ct Exp. Z	.75
SD1	1
SDS	1
S1	1
TL (sec)	5
Risk Cat	I or II
Drift Cat	Other
Om Z	1
Om X	1
Cd Z	1
Cd X	1
Rho Z	1
Rho X	1

Joint Coordinates and Temperatures

	Label	X [in]	Y [in]	Z [in]	Temp [F]	Detach From Diaphragm
1	N1	-24	0	-96	0	
2	N2	-24	176	-96	0	
3	N3	-24	18	-96	0	
4	N4	-24	66	-96	0	
5	N5	-24	167	-96	0	
6	N6	-24	122	-96	0	
7	N7	-24	167	-90	0	
8	N8	-24	122	-90	0	
9	N9	-24	200	-90	0	
10	N10	-24	116	-90	0	
11	N11	-13.5	18	-96	0	
12	N12	-13.5	66	-96	0	
13	N13	48	0	0	0	
14	N14	48	176	0	0	
15	N15	48	18	0	0	
16	N16	48	66	0	0	
17	N17	48	167	0	0	
18	N18	48	122	0	0	
19	N19	48	167	6	0	
20	N20	48	122	6	0	
21	N21	48	200	6	0	
22	N22	48	116	6	0	
23	N23	48	18	-10.5	0	
24	N24	48	66	-10.5	0	
25	N25	96	0	0	0	
26	N26	96	176	0	0	
27	N27	96	18	0	0	
28	N28	96	66	0	0	
29	N29	96	167	0	0	
30	N30	96	122	0	0	

Joint Coordinates and Temperatures (Continued)

	Label	X [in]	Y [in]	Z [in]	Temp [F]	Detach From Diaphragm
31	N31	96	167	6	0	
32	N32	96	122	6	0	
33	N33	96	200	6	0	
34	N34	96	116	6	0	
35	N35	96	18	-10.5	0	
36	N36	96	66	-10.5	0	

Joint Boundary Conditions

	Joint Label	X [k/in]	Y [k/in]	Z [k/in]	X Rot.[k-ft/rad]	Y Rot.[k-ft/rad]	Z Rot.[k-ft/rad]
1	N12	Reaction	Reaction	Reaction		Reaction	
2	N11	Reaction	Reaction	Reaction		Reaction	
3	N23	Reaction	Reaction	Reaction		Reaction	
4	N24	Reaction	Reaction	Reaction		Reaction	
5	N35	Reaction	Reaction	Reaction		Reaction	
6	N36	Reaction	Reaction	Reaction		Reaction	

Hot Rolled Steel Properties

	Label	E [ksi]	G [ksi]	Nu	Therm (\1E5 F)	Density[k/ft^3]	Yield[ksi]	Ry	Fu[ksi]	Rt
1	A36 Gr.36	29000	11154	.3	.65	.49	36	1.5	58	1.2
2	A572 Gr.50	29000	11154	.3	.65	.49	50	1.1	65	1.1
3	A992	29000	11154	.3	.65	.49	50	1.1	65	1.1
4	A500 Gr.42	29000	11154	.3	.65	.49	42	1.4	58	1.3
5	A500 Gr.46	29000	11154	.3	.65	.49	46	1.4	58	1.3
6	A53 Gr.B	29000	11154	.3	.65	.49	35	1.6	60	1.2

Member Primary Data

	Label	I Joint	J Joint	K Joint	Rotate(d...	Section/Shape	Type	Design List	Material	Design Rules
1	M1	N4	N12			HSS3x3x3	Beam	SquareTube	A500 Gr.46	Typical
2	M2	N3	N11			HSS3x3x3	Beam	SquareTube	A500 Gr.46	Typical
3	M3	N2	N1			PIPE_3.0	Beam	Pipe	A53 Gr.B	Typical
4	B1	N9	N10			PIPE_2.5	Beam	Pipe	A53 Gr.B	Typical
5	M5	N7	N5			RIGID	None	None	RIGID	Typical
6	M6	N8	N6			RIGID	None	None	RIGID	Typical
7	M7	N16	N24			HSS3x3x3	Beam	SquareTube	A500 Gr.46	Typical
8	M8	N15	N23			HSS3x3x3	Beam	SquareTube	A500 Gr.46	Typical
9	M9	N14	N13			PIPE_3.0	Beam	Pipe	A53 Gr.B	Typical
10	B3	N21	N22			PIPE_2.5	Beam	Pipe	A53 Gr.B	Typical
11	M11	N19	N17			RIGID	None	None	RIGID	Typical
12	M12	N20	N18			RIGID	None	None	RIGID	Typical
13	M13	N28	N36			HSS3x3x3	Beam	SquareTube	A500 Gr.46	Typical
14	M14	N27	N35			HSS3x3x3	Beam	SquareTube	A500 Gr.46	Typical
15	M15	N26	N25			PIPE_3.0	Beam	Pipe	A53 Gr.B	Typical
16	B4	N33	N34			PIPE_2.5	Beam	Pipe	A53 Gr.B	Typical
17	M17	N31	N29			RIGID	None	None	RIGID	Typical
18	M18	N32	N30			RIGID	None	None	RIGID	Typical

Member Advanced Data

	Label	I Release	J Release	I Offset[in]	J Offset[in]	T/C Only	Physical	Analysis ...	Inactive	Seismic Design ...
1	M1						Yes			None
2	M2						Yes			None
3	M3						Yes			None

Member Advanced Data (Continued)

	Label	I Release	J Release	I Offset[in]	J Offset[in]	T/C Only	Physical	Analysis ...	Inactive	Seismic Design ...
4	B1						Yes			None
5	M5						Yes			None
6	M6						Yes			None
7	M7						Yes			None
8	M8						Yes			None
9	M9						Yes			None
10	B3						Yes			None
11	M11						Yes			None
12	M12						Yes			None
13	M13						Yes			None
14	M14						Yes			None
15	M15						Yes			None
16	B4						Yes			None
17	M17						Yes			None
18	M18						Yes			None

Hot Rolled Steel Design Parameters

	Label	Shape	Length[in]	Lbyy[in]	Lbzz[in]	Lcomp top[in]	Lcomp bot[in]	L-torq...	Kyy	Kzz	Cb	Function
1	M1	HSS3x3x3	10.5			Lbyy						Lateral
2	M2	HSS3x3x3	10.5			Lbyy						Lateral
3	M3	PIPE_3.0	176			Lbyy						Lateral
4	B1	PIPE_2.5	84			Lbyy						Lateral
5	M7	HSS3x3x3	10.5			Lbyy						Lateral
6	M8	HSS3x3x3	10.5			Lbyy						Lateral
7	M9	PIPE_3.0	176			Lbyy						Lateral
8	B3	PIPE_2.5	84			Lbyy						Lateral
9	M13	HSS3x3x3	10.5			Lbyy						Lateral
10	M14	HSS3x3x3	10.5			Lbyy						Lateral
11	M15	PIPE_3.0	176			Lbyy						Lateral
12	B4	PIPE_2.5	84			Lbyy						Lateral

Basic Load Cases

	BLC Description	Category	...	Y Grav...	Z Grav...	Joint	Point	Distribut...	Area(Mem...	Surface(Plate/Wall)
1	DEAD LOAD	DL		-1			9			
2	LIVE LOAD (Lv)	LL								
3	WIND FRONT	WLZ					9	9		
4	WIND SIDE	WLX					9	9		
5	Wind Front @ 30 ...	WLZ					9	9		
6	Wind Side @ 30 ...	WLX					9	9		
7	UDL	LL								
8	LIVE LOAD (Lm)	LL				1				

Load Combinations

	Description	Sol...	PD...	SR...	B...	Fa...	B...	Fa...	B...	Fa...	B...	Fa...	B...	Fa...	B...	Fa...	B...	Fa...	B...	Fa...	B...	Fa...	B...	Fa...
1	DEAD LOAD	Yes	Y		1	1																		
2	1.4 DEAD LOAD	Yes	Y		1	1.4																		
3	Dead + Lv	Yes	Y		1	1	2	1																
4	1.2 DEAD LOAD + 1.5 Lv	Yes	Y		1	1.2	2	1.5																
5	DEAD LOAD + UDL	Yes	Y		1	1											7	1						
6	1.2 DEAD LOAD + 1.5 UDL	Yes	Y		1	1.2											7	1.5						
7	1.2 DEAD LOAD + 1.6 WIND 0	Yes	Y		1	1.2			3	1.6														
8	1.2 DEAD LOAD + 1.6 WIND 30	Yes	Y		1	1.2			3	1.39	4	.8												

Load Combinations (Continued)

	Description	Sol...	PD...	SR...	B...	Fa...	B...	Fa...	B...	Fa...	B...	Fa...	B...	Fa...	B...	Fa...	B...	Fa...	B...	Fa...	B...	Fa...	B...	Fa...
9	1.2 DEAD LOAD + 1.6 WIND 60	Yes	Y		1	1.2			3	.8	4	1.39												
10	1.2 DEAD LOAD + 1.6 WIND 90	Yes	Y		1	1.2					4	1.6												
11	1.2 DEAD LOAD + 1.6 WIND 120	Yes	Y		1	1.2			3	-.8	4	1.39												
12	1.2 DEAD LOAD + 1.6 WIND 150	Yes	Y		1	1.2			3	-1....	4	.8												
13	1.2 DEAD LOAD + 1.6 WIND 180	Yes	Y		1	1.2			3	-1.6														
14	1.2 DEAD LOAD + 1.6 WIND 210	Yes	Y		1	1.2			3	-1....	4	-.8												
15	1.2 DEAD LOAD + 1.6 WIND 240	Yes	Y		1	1.2			3	-.8	4	-1....												
16	1.2 DEAD LOAD + 1.6 WIND 270	Yes	Y		1	1.2					4	-1.6												
17	1.2 DEAD LOAD + 1.6 WIND 300	Yes	Y		1	1.2			3	.8	4	-1....												
18	1.2 DEAD LOAD + 1.6 WIND 330	Yes	Y		1	1.2			3	1.39	4	-.8												
19	0.9 DEAD LOAD + 1.6 WIND 0	Yes	Y		1	.9			3	1.6														
20	0.9 DEAD LOAD + 1.6 WIND 30	Yes	Y		1	.9			3	1.39	4	.8												
21	0.9 DEAD LOAD + 1.6 WIND 60	Yes	Y		1	.9			3	.8	4	1.39												
22	0.9 DEAD LOAD + 1.6 WIND 90	Yes	Y		1	.9					4	1.6												
23	0.9 DEAD LOAD + 1.6 WIND 120	Yes	Y		1	.9			3	-.8	4	1.39												
24	0.9 DEAD LOAD + 1.6 WIND 150	Yes	Y		1	.9			3	-1....	4	.8												
25	0.9 DEAD LOAD + 1.6 WIND 180	Yes	Y		1	.9			3	-1.6														
26	0.9 DEAD LOAD + 1.6 WIND 210	Yes	Y		1	.9			3	-1....	4	-.8												
27	0.9 DEAD LOAD + 1.6 WIND 240	Yes	Y		1	.9			3	-.8	4	-1....												
28	0.9 DEAD LOAD + 1.6 WIND 270	Yes	Y		1	.9					4	-1.6												
29	0.9 DEAD LOAD + 1.6 WIND 300	Yes	Y		1	.9			3	.8	4	-1....												
30	0.9 DEAD LOAD + 1.6 WIND 330	Yes	Y		1	.9			3	1.39	4	-.8												
31	1.2 DEAD LOAD + 1.5 LIVE LOA...	Yes	Y		1	1.2							5	1					8	1.5				
32	1.2 DEAD LOAD + 1.5 LIVE LOA...	Yes	Y		1	1.2							5	.869	6	.5			8	1.5				
33	1.2 DEAD LOAD + 1.5 LIVE LOA...	Yes	Y		1	1.2							5	.5	6	.869			8	1.5				
34	1.2 DEAD LOAD + 1.5 LIVE LOA...	Yes	Y		1	1.2									6	1			8	1.5				
35	1.2 DEAD LOAD + 1.5 LIVE LOA...	Yes	Y		1	1.2							5	-.5	6	.869			8	1.5				
36	1.2 DEAD LOAD + 1.5 LIVE LOA...	Yes	Y		1	1.2							5	-.8...	6	.5			8	1.5				
37	1.2 DEAD LOAD + 1.5 LIVE LOA...	Yes	Y		1	1.2							5	-1					8	1.5				
38	1.2 DEAD LOAD + 1.5 LIVE LOA...	Yes	Y		1	1.2							5	-.8...	6	-.5			8	1.5				
39	1.2 DEAD LOAD + 1.5 LIVE LOA...	Yes	Y		1	1.2							5	-.5	6	-.8...			8	1.5				
40	1.2 DEAD LOAD + 1.5 LIVE LOA...	Yes	Y		1	1.2									6	-1			8	1.5				
41	1.2 DEAD LOAD + 1.5 LIVE LOA...	Yes	Y		1	1.2							5	.5	6	-.8...			8	1.5				
42	1.2 DEAD LOAD + 1.5 LIVE LOA...	Yes	Y		1	1.2							5	.869	6	-.5			8	1.5				
43	0.9 DEAD LOAD + 1.5 LIVE LOA...	Yes	Y		1	.9							5	1					8	1.5				
44	0.9 DEAD LOAD + 1.5 LIVE LOA...	Yes	Y		1	.9							5	.869	6	.5			8	1.5				
45	0.9 DEAD LOAD + 1.5 LIVE LOA...	Yes	Y		1	.9							5	.5	6	.869			8	1.5				
46	0.9 DEAD LOAD + 1.5 LIVE LOA...	Yes	Y		1	.9									6	1			8	1.5				
47	0.9 DEAD LOAD + 1.5 LIVE LOA...	Yes	Y		1	.9							5	-.5	6	.869			8	1.5				
48	0.9 DEAD LOAD + 1.5 LIVE LOA...	Yes	Y		1	.9							5	-.8...	6	.5			8	1.5				
49	0.9 DEAD LOAD + 1.5 LIVE LOA...	Yes	Y		1	.9							5	-1					8	1.5				
50	0.9 DEAD LOAD + 1.5 LIVE LOA...	Yes	Y		1	.9							5	-.8...	6	-.5			8	1.5				
51	0.9 DEAD LOAD + 1.5 LIVE LOA...	Yes	Y		1	.9							5	-.5	6	-.8...			8	1.5				
52	0.9 DEAD LOAD + 1.5 LIVE LOA...	Yes	Y		1	.9									6	-1			8	1.5				
53	0.9 DEAD LOAD + 1.5 LIVE LOA...	Yes	Y		1	.9							5	.5	6	-.8...			8	1.5				
54	0.9 DEAD LOAD + 1.5 LIVE LOA...	Yes	Y		1	.9							5	.869	6	-.5			8	1.5				

Joint Loads and Enforced Displacements (BLC 8 : LIVE LOAD (Lm))

	Joint Label	L,D,M	Direction	Magnitude[(k,k-ft), (in,rad), (k*s^2/in, k*s...
1	N9	L	Y	-.5

Member Point Loads (BLC 1 : DEAD LOAD)

	Member Label	Direction	Magnitude[k,k-ft]	Location[in,%]
1	B1	Y	-.05	%5
2	B3	Y	-.05	%5
3	B4	Y	-.05	%5
4	B1	Y	-.05	%95
5	B3	Y	-.05	%95
6	B4	Y	-.05	%95
7	M3	Y	-.1	%55
8	M9	Y	-.12	%55
9	M15	Y	-.06	%55

Member Point Loads (BLC 3 : WIND FRONT)

	Member Label	Direction	Magnitude[k,k-ft]	Location[in,%]
1	B1	Z	-.21	%5
2	B3	Z	-.21	%5
3	B4	Z	-.21	%5
4	B1	Z	-.21	%95
5	B3	Z	-.21	%95
6	B4	Z	-.21	%95
7	M3	Z	-.084	%55
8	M9	Z	-.103	%55
9	M15	Z	-.034	%55

Member Point Loads (BLC 4 : WIND SIDE)

	Member Label	Direction	Magnitude[k,k-ft]	Location[in,%]
1	B1	X	-.174	%5
2	B3	X	-.174	%5
3	B4	X	-.174	%5
4	B1	X	-.174	%95
5	B3	X	-.174	%95
6	B4	X	-.174	%95
7	M3	X	-.139	%55
8	M9	X	-.128	%55
9	M15	X	-.083	%55

Member Point Loads (BLC 5 : Wind Front @ 30 mph)

	Member Label	Direction	Magnitude[k,k-ft]	Location[in,%]
1	B1	Z	-.01	%5
2	B3	Z	-.01	%5
3	B4	Z	-.01	%5
4	B1	Z	-.01	%95
5	B3	Z	-.01	%95
6	B4	Z	-.01	%95
7	M3	Z	-.004	%55
8	M9	Z	-.005	%55
9	M15	Z	-.002	%55

Member Point Loads (BLC 6 : Wind Side @ 30 mph)

	Member Label	Direction	Magnitude[k,k-ft]	Location[in,%]
1	B1	X	-.009	%5
2	B3	X	-.009	%5
3	B4	X	-.009	%5
4	B1	X	-.009	%95
5	B3	X	-.009	%95
6	B4	X	-.009	%95

Member Point Loads (BLC 6 : Wind Side @ 30 mph) (Continued)

	Member Label	Direction	Magnitude[k,k-ft]	Location[in,%]
7	M3	X	-.007	%55
8	M9	X	-.006	%55
9	M15	X	-.004	%55

Member Distributed Loads (BLC 3 : WIND FRONT)

	Member Label	Direction	Start Magnitude[k/ft,F,ksf]	End Magnitude[k/ft,F,ksf]	Start Loca...	End Location[in,...
1	M1	PZ	-.025	-.025	0	0
2	M2	PZ	-.025	-.025	0	0
3	M7	PZ	-.025	-.025	0	0
4	M8	PZ	-.025	-.025	0	0
5	M13	PZ	-.025	-.025	0	0
6	M14	PZ	-.025	-.025	0	0
7	M3	PZ	-.018	-.018	0	0
8	M9	PZ	-.018	-.018	0	0
9	M15	PZ	-.018	-.018	0	0

Member Distributed Loads (BLC 4 : WIND SIDE)

	Member Label	Direction	Start Magnitude[k/ft,F,ksf]	End Magnitude[k/ft,F,ksf]	Start Loca...	End Location[in,...
1	M1	PX	-.025	-.025	0	0
2	M2	PX	-.025	-.025	0	0
3	M7	PX	-.025	-.025	0	0
4	M8	PX	-.025	-.025	0	0
5	M13	PX	-.025	-.025	0	0
6	M14	PX	-.025	-.025	0	0
7	M3	PX	-.018	-.018	0	0
8	M9	PX	-.018	-.018	0	0
9	M15	PX	-.018	-.018	0	0

Member Distributed Loads (BLC 5 : Wind Front @ 30 mph)

	Member Label	Direction	Start Magnitude[k/ft,F,ksf]	End Magnitude[k/ft,F,ksf]	Start Loca...	End Location[in,...
1	M1	PZ	-.001	-.001	0	0
2	M2	PZ	-.001	-.001	0	0
3	M7	PZ	-.001	-.001	0	0
4	M8	PZ	-.001	-.001	0	0
5	M13	PZ	-.001	-.001	0	0
6	M14	PZ	-.001	-.001	0	0
7	M3	PZ	-.000882	-.000882	0	0
8	M9	PZ	-.000882	-.000882	0	0
9	M15	PZ	-.000882	-.000882	0	0

Member Distributed Loads (BLC 6 : Wind Side @ 30 mph)

	Member Label	Direction	Start Magnitude[k/ft,F,ksf]	End Magnitude[k/ft,F,ksf]	Start Loca...	End Location[in,...
1	M1	PX	-.001	-.001	0	0
2	M2	PX	-.001	-.001	0	0
3	M7	PX	-.001	-.001	0	0
4	M8	PX	-.001	-.001	0	0
5	M13	PX	-.001	-.001	0	0
6	M14	PX	-.001	-.001	0	0
7	M3	PX	-.000882	-.000882	0	0
8	M9	PX	-.000882	-.000882	0	0
9	M15	PX	-.000882	-.000882	0	0

Member Area Loads

Joint A	Joint B	Joint C	Joint D	Direction	Distribution	Magnitude[ksf]
No Data to Print ...						

Envelope Joint Reactions

	Joint		X [k]	LC	Y [k]	LC	Z [k]	LC	MX [k-ft]	LC	MY [k-ft]	LC	MZ [k-ft]	LC
1	N12	max	2.634	10	2.943	16	2.789	7	0	1	2.119	7	0	1
2		min	-2.473	28	-2.546	22	-2.82	13	0	1	-2.141	13	0	1
3	N11	max	1.27	28	2.923	10	1.522	13	0	1	1.036	13	0	1
4		min	-1.431	10	-2.565	28	-1.491	7	0	1	-1.013	7	0	1
5	N23	max	1.307	16	3.35	13	1.657	13	0	1	.836	16	0	1
6		min	-1.307	10	-2.922	19	-1.458	19	0	1	-.836	10	0	1
7	N24	max	2.562	10	3.312	7	2.717	19	0	1	2.183	10	0	1
8		min	-2.562	16	-2.941	25	-2.916	13	0	1	-2.183	16	0	1
9	N35	max	1.285	16	3.255	13	1.609	13	0	1	.826	16	0	1
10		min	-1.285	10	-2.889	19	-1.438	19	0	1	-.826	10	0	1
11	N36	max	2.469	10	3.215	7	2.587	19	0	1	2.11	10	0	1
12		min	-2.469	16	-2.909	25	-2.758	13	0	1	-2.11	16	0	1
13	Totals:	max	3.642	22	1.996	31	3.706	7						
14		min	-3.642	28	.935	25	-3.706	25						

Envelope Member Section Deflections Strength

	Member	Sec		x [in]	LC	y [in]	LC	z [in]	LC	x Rotate ...	LC	(n) L/y R...	LC	(n) L/z R...	LC
1	M1	1	max	0	28	.043	28	.018	13	1.992e-02	13	3049.449	25	NC	1
2			min	0	10	-.051	10	-.018	7	-1.954e-02	7	204.787	10	574.862	13
3		2	max	0	28	.029	28	.012	13	1.992e-02	13	3806.985	25	NC	1
4			min	0	10	-.036	10	-.012	7	-1.954e-02	7	294.409	10	863.354	13
5		3	max	0	28	.018	28	.006	13	1.992e-02	13	5461.3	25	NC	1
6			min	0	10	-.022	10	-.006	7	-1.954e-02	7	467.741	10	1617.489	13
7		4	max	0	28	.009	28	.002	13	1.992e-02	13	NC	19	NC	1
8			min	0	10	-.011	10	-.002	7	-1.954e-02	7	969.904	10	4904.089	13
9		5	max	0	1	0	1	0	1	1.992e-02	13	NC	1	NC	1
10			min	0	1	0	1	0	1	-1.954e-02	7	NC	1	NC	1
11	M2	1	max	0	10	.041	28	.008	7	8.737e-03	7	3169.338	25	NC	1
12			min	0	28	-.048	10	-.008	13	-8.908e-03	13	217	10	1241.129	13
13		2	max	0	10	.033	28	.006	7	8.737e-03	7	3950.789	25	NC	1
14			min	0	28	-.04	10	-.006	13	-8.908e-03	13	265.568	10	1812.201	13
15		3	max	0	10	.024	28	.003	7	8.737e-03	7	5662.196	25	NC	1
16			min	0	28	-.028	10	-.003	13	-8.908e-03	13	376.27	10	3312.636	13
17		4	max	0	10	.012	28	.001	7	8.737e-03	7	NC	19	NC	1
18			min	0	28	-.014	10	-.001	13	-8.908e-03	13	728.312	10	9756.866	13
19		5	max	0	1	0	1	0	1	8.737e-03	7	NC	1	NC	1
20			min	0	1	0	1	0	1	-8.908e-03	13	NC	1	NC	1
21	M3	1	max	.052	10	4.303	10	6.02	19	4.231e-03	21	NC	1	NC	1
22			min	-.043	28	-4.241	16	-6.163	13	-4.556e-03	15	NC	1	NC	1
23		2	max	.052	10	2.086	10	3.178	19	4.062e-03	21	NC	1	9434.936	22
24			min	-.043	28	-2.049	16	-3.25	13	-4.142e-03	15	155.786	10	124.788	13
25		3	max	.051	10	.378	10	.708	7	2.574e-03	20	NC	1	5780.768	22
26			min	-.043	28	-.366	28	-.722	13	-2.586e-03	14	100.482	10	72.265	13
27		4	max	.05	10	.029	28	.17	13	7.882e-04	20	NC	1	8332.524	22
28			min	-.042	28	-.03	10	-.167	7	-7.9e-04	14	164.106	10	96.435	13
29		5	max	.048	10	.035	28	.15	7	8.065e-04	13	NC	1	NC	1
30			min	-.041	28	-.044	10	-.152	13	-7.857e-04	7	NC	1	NC	1
31	B1	1	max	.398	13	5.657	10	7.661	19	4.231e-03	21	NC	1	NC	1
32			min	-.379	19	-5.583	16	-7.843	13	-4.556e-03	15	NC	1	NC	1

Envelope Member Section Deflections Strength (Continued)

	Member	Sec		x [in]	LC	y [in]	LC	z [in]	LC	x Rotate ...	LC	(n) L/y R...	LC	(n) L/z R...	LC
33		2	max	.398	13	4.497	10	6.231	19	4.231e-03	21	NC	1	NC	1
34			min	-.379	19	-4.434	16	-6.379	13	-4.556e-03	15	932.583	10	1533.042	13
35		3	max	.397	13	3.392	10	4.861	19	4.188e-03	21	NC	1	NC	1
36			min	-.379	19	-3.341	16	-4.975	13	-4.449e-03	15	670.009	10	1680.632	13
37		4	max	.395	13	2.345	10	3.5	19	4.087e-03	21	NC	1	NC	1
38			min	-.377	19	-2.306	16	-3.58	13	-4.201e-03	15	823.796	10	2343.315	13
39		5	max	.394	13	1.377	10	2.16	19	4.014e-03	21	NC	1	NC	1
40			min	-.376	19	-1.35	16	-2.207	13	-4.024e-03	15	NC	1	NC	1
41	M5	1	max	5.442	19	.379	19	3.801	16	5.149e-02	16	NC	1	NC	1
42			min	-5.57	13	-.398	13	-3.857	10	-5.205e-02	10	NC	1	NC	1
43		2	max	5.442	19	.283	19	3.795	16	5.149e-02	16	NC	1	NC	1
44			min	-5.57	13	-.299	13	-3.852	10	-5.205e-02	10	NC	1	NC	1
45		3	max	5.442	19	.186	19	3.789	16	5.149e-02	16	NC	1	NC	1
46			min	-5.57	13	-.2	13	-3.846	10	-5.205e-02	10	NC	1	NC	1
47		4	max	5.442	19	.101	30	3.783	16	5.149e-02	16	NC	1	NC	1
48			min	-5.57	13	-.112	12	-3.84	10	-5.205e-02	10	NC	1	NC	1
49		5	max	5.442	19	.043	28	3.778	16	5.149e-02	16	NC	1	NC	1
50			min	-5.57	13	-.052	10	-3.834	10	-5.205e-02	10	NC	1	NC	1
51	M6	1	max	2.539	19	.376	19	1.615	16	4.432e-02	16	NC	1	NC	1
52			min	-2.596	13	-.394	13	-1.647	10	-4.488e-02	10	NC	1	NC	1
53		2	max	2.539	19	.281	19	1.61	16	4.432e-02	16	NC	1	NC	1
54			min	-2.596	13	-.297	13	-1.641	10	-4.488e-02	10	NC	1	NC	1
55		3	max	2.539	19	.186	19	1.605	16	4.432e-02	16	NC	1	NC	1
56			min	-2.596	13	-.2	13	-1.636	10	-4.488e-02	10	NC	1	NC	1
57		4	max	2.539	19	.102	30	1.6	16	4.432e-02	16	NC	1	NC	1
58			min	-2.596	13	-.113	12	-1.631	10	-4.488e-02	10	NC	1	NC	1
59		5	max	2.539	19	.043	28	1.595	16	4.432e-02	16	NC	1	NC	1
60			min	-2.596	13	-.052	10	-1.626	10	-4.488e-02	10	NC	1	NC	1
61	M7	1	max	0	19	.049	19	.019	16	1.739e-02	16	4163.462	43	NC	1
62			min	0	13	-.059	13	-.019	10	-1.739e-02	10	178.961	13	542.447	10
63		2	max	0	19	.033	19	.013	16	1.739e-02	16	4884.866	43	NC	1
64			min	0	13	-.041	13	-.013	10	-1.739e-02	10	257.582	13	833.176	10
65		3	max	0	19	.021	19	.007	16	1.739e-02	16	6747.541	43	NC	1
66			min	0	13	-.026	13	-.007	10	-1.739e-02	10	409.626	13	1593.906	10
67		4	max	0	19	.01	19	.002	16	1.739e-02	16	NC	43	NC	1
68			min	0	13	-.012	13	-.002	10	-1.739e-02	10	849.935	13	4958.681	10
69		5	max	0	1	0	1	0	1	1.739e-02	16	NC	1	NC	1
70			min	0	1	0	1	0	1	-1.739e-02	10	NC	1	NC	1
71	M8	1	max	0	13	.046	19	.007	10	7.693e-03	10	4289.38	43	NC	1
72			min	0	19	-.055	13	-.007	16	-7.693e-03	16	189.668	13	1580.926	10
73		2	max	0	13	.038	19	.005	10	7.693e-03	10	5394.36	43	NC	1
74			min	0	19	-.045	13	-.005	16	-7.693e-03	16	232.079	13	2269.503	10
75		3	max	0	13	.027	19	.003	10	7.693e-03	10	7774.658	43	NC	1
76			min	0	19	-.032	13	-.003	16	-7.693e-03	16	328.788	13	4089.415	10
77		4	max	0	13	.014	19	0	10	7.693e-03	10	NC	43	NC	1
78			min	0	19	-.016	13	0	16	-7.693e-03	16	636.369	13	NC	1
79		5	max	0	1	0	1	0	1	7.693e-03	10	NC	1	NC	1
80			min	0	1	0	1	0	1	-7.693e-03	16	NC	1	NC	1
81	M9	1	max	.056	13	5.501	10	4.629	19	5.747e-03	10	NC	1	NC	1
82			min	-.046	19	-5.501	16	-4.806	13	-5.747e-03	16	NC	1	NC	1
83		2	max	.058	13	2.811	10	2.337	19	5.409e-03	10	NC	1	NC	31
84			min	-.048	19	-2.811	16	-2.429	13	-5.409e-03	16	130.599	10	151.36	13
85		3	max	.059	13	.631	10	.417	19	3.518e-03	10	NC	1	NC	31
86			min	-.049	19	-.631	16	-.437	13	-3.518e-03	16	80.52	10	90.689	13
87		4	max	.057	13	.146	16	.034	13	1.014e-03	10	NC	1	NC	31
88			min	-.048	19	-.146	10	-.033	19	-1.014e-03	16	108.626	10	146.88	13
89		5	max	.055	13	.132	10	.05	13	5.725e-04	16	NC	1	NC	1

Envelope Member Section Deflections Strength (Continued)

	Member	Sec		x [in]	LC	y [in]	LC	z [in]	LC	x Rotate ...	LC	(n) L/y R...	LC	(n) L/z R...	LC
90			min	-.046	19	-.132	16	-.04	19	-5.725e-04	10	NC	1	NC	1
91	B3	1	max	.379	13	7.126	10	5.969	19	5.747e-03	10	NC	1	NC	1
92			min	-.357	19	-7.126	16	-6.193	13	-5.747e-03	16	NC	1	NC	1
93		2	max	.379	13	5.739	10	4.802	19	5.747e-03	10	NC	1	NC	1
94			min	-.357	19	-5.739	16	-4.985	13	-5.747e-03	16	930.573	10	1535.232	13
95		3	max	.378	13	4.408	10	3.695	19	5.66e-03	10	NC	1	NC	1
96			min	-.356	19	-4.408	16	-3.837	13	-5.66e-03	16	669.38	10	1682.661	13
97		4	max	.376	13	3.135	10	2.596	19	5.457e-03	10	NC	1	NC	1
98			min	-.355	19	-3.135	16	-2.698	13	-5.457e-03	16	821.782	10	2346.175	13
99		5	max	.375	13	1.942	10	1.52	19	5.312e-03	10	NC	1	NC	1
100			min	-.354	19	-1.942	16	-1.581	13	-5.312e-03	16	NC	1	NC	1
101	M11	1	max	4.163	19	.357	19	4.97	16	6.282e-02	16	NC	1	NC	1
102			min	-4.323	13	-.379	13	-4.97	10	-6.282e-02	10	NC	1	NC	1
103		2	max	4.163	19	.279	19	4.962	16	6.282e-02	16	NC	1	NC	1
104			min	-4.323	13	-.298	13	-4.962	10	-6.282e-02	10	NC	1	NC	1
105		3	max	4.163	19	.202	19	4.953	16	6.282e-02	16	NC	1	NC	1
106			min	-4.323	13	-.217	13	-4.953	10	-6.282e-02	10	NC	1	NC	1
107		4	max	4.163	19	.124	19	4.944	16	6.282e-02	16	NC	1	NC	1
108			min	-4.323	13	-.137	13	-4.944	10	-6.282e-02	10	NC	1	NC	1
109		5	max	4.163	19	.046	19	4.936	16	6.282e-02	16	NC	1	NC	1
110			min	-4.323	13	-.056	13	-4.936	10	-6.282e-02	10	NC	1	NC	1
111	M12	1	max	1.824	19	.354	19	2.275	16	5.562e-02	16	NC	1	NC	1
112			min	-1.897	13	-.375	13	-2.275	10	-5.562e-02	10	NC	1	NC	1
113		2	max	1.824	19	.277	19	2.267	16	5.562e-02	16	NC	1	NC	1
114			min	-1.897	13	-.296	13	-2.267	10	-5.562e-02	10	NC	1	NC	1
115		3	max	1.824	19	.201	19	2.259	16	5.562e-02	16	NC	1	NC	1
116			min	-1.897	13	-.217	13	-2.259	10	-5.562e-02	10	NC	1	NC	1
117		4	max	1.824	19	.125	19	2.251	16	5.562e-02	16	NC	1	NC	1
118			min	-1.897	13	-.138	13	-2.251	10	-5.562e-02	10	NC	1	NC	1
119		5	max	1.824	19	.049	19	2.243	16	5.562e-02	16	NC	1	NC	1
120			min	-1.897	13	-.059	13	-2.243	10	-5.562e-02	10	NC	1	NC	1
121	M13	1	max	0	19	.049	19	.019	16	1.712e-02	16	5366.892	43	NC	1
122			min	0	13	-.057	13	-.019	10	-1.712e-02	10	184.696	13	560.879	10
123		2	max	0	19	.033	19	.012	16	1.712e-02	16	6201.449	43	NC	1
124			min	0	13	-.039	13	-.012	10	-1.712e-02	10	266.333	13	861.96	10
125		3	max	0	19	.02	19	.006	16	1.712e-02	16	8491.357	43	NC	1
126			min	0	13	-.025	13	-.006	10	-1.712e-02	10	424.191	13	1649.825	10
127		4	max	0	19	.01	19	.002	16	1.712e-02	16	NC	22	NC	1
128			min	0	13	-.012	13	-.002	10	-1.712e-02	10	881.045	13	5136.015	10
129		5	max	0	1	0	1	0	1	1.712e-02	16	NC	1	NC	1
130			min	0	1	0	1	0	1	-1.712e-02	10	NC	1	NC	1
131	M14	1	max	0	13	.046	19	.007	10	7.584e-03	10	5505.027	43	NC	1
132			min	0	19	-.054	13	-.007	16	-7.584e-03	16	195.775	13	1598.663	10
133		2	max	0	13	.038	19	.005	10	7.584e-03	10	6938.14	43	NC	1
134			min	0	19	-.044	13	-.005	16	-7.584e-03	16	239.496	13	2297.329	10
135		3	max	0	13	.027	19	.003	10	7.584e-03	10	NC	43	NC	1
136			min	0	19	-.031	13	-.003	16	-7.584e-03	16	339.246	13	4143.138	10
137		4	max	0	13	.014	19	0	10	7.584e-03	10	NC	22	NC	1
138			min	0	19	-.016	13	0	16	-7.584e-03	16	656.559	13	NC	1
139		5	max	0	1	0	1	0	1	7.584e-03	10	NC	1	NC	1
140			min	0	1	0	1	0	1	-7.584e-03	16	NC	1	NC	1
141	M15	1	max	.055	13	5.458	10	4.6	19	5.675e-03	10	NC	1	NC	1
142			min	-.046	19	-5.458	16	-4.767	13	-5.675e-03	16	NC	1	NC	1
143		2	max	.057	13	2.785	10	2.32	19	5.337e-03	10	NC	1	NC	31
144			min	-.048	19	-2.785	16	-2.406	13	-5.337e-03	16	131.303	10	152.134	13
145		3	max	.057	13	.623	10	.412	19	3.445e-03	10	NC	1	NC	32
146			min	-.049	19	-.623	16	-.43	13	-3.445e-03	16	81.05	10	91.241	13

Envelope Member Section Deflections Strength (Continued)

	Member	Sec		x [in]	LC	y [in]	LC	z [in]	LC	x Rotate ...	LC	(n) L/y R...	LC	(n) L/z R...	LC
147		4	max	.055	13	.144	16	.033	13	9.761e-04	10	NC	1	NC	31
148			min	-.048	19	-.144	10	-.032	19	-9.761e-04	16	109.596	10	143.025	13
149		5	max	.054	13	.13	10	.048	13	5.698e-04	16	NC	1	NC	1
150			min	-.046	19	-.13	16	-.04	19	-5.698e-04	10	NC	1	NC	1
151	B4	1	max	.375	13	7.072	10	5.933	19	5.675e-03	10	NC	1	NC	1
152			min	-.355	19	-7.072	16	-6.145	13	-5.675e-03	16	NC	1	NC	1
153		2	max	.374	13	5.694	10	4.772	19	5.675e-03	10	NC	1	NC	1
154			min	-.355	19	-5.694	16	-4.945	13	-5.675e-03	16	930.648	10	1535.297	13
155		3	max	.374	13	4.371	10	3.671	19	5.588e-03	10	NC	1	NC	1
156			min	-.354	19	-4.371	16	-3.804	13	-5.588e-03	16	669.437	10	1682.714	13
157		4	max	.372	13	3.107	10	2.578	19	5.385e-03	10	NC	1	NC	1
158			min	-.353	19	-3.107	16	-2.673	13	-5.385e-03	16	821.857	10	2346.272	13
159		5	max	.371	13	1.922	10	1.507	19	5.24e-03	10	NC	1	NC	1
160			min	-.352	19	-1.922	16	-1.564	13	-5.24e-03	16	NC	1	NC	1
161	M17	1	max	4.136	19	.355	19	4.93	16	6.242e-02	16	NC	1	NC	1
162			min	-4.287	13	-.374	13	-4.93	10	-6.242e-02	10	NC	1	NC	1
163		2	max	4.136	19	.278	19	4.921	16	6.242e-02	16	NC	1	NC	1
164			min	-4.287	13	-.294	13	-4.921	10	-6.242e-02	10	NC	1	NC	1
165		3	max	4.136	19	.2	19	4.913	16	6.242e-02	16	NC	1	NC	1
166			min	-4.287	13	-.215	13	-4.913	10	-6.242e-02	10	NC	1	NC	1
167		4	max	4.136	19	.123	19	4.904	16	6.242e-02	16	NC	1	NC	1
168			min	-4.287	13	-.135	13	-4.904	10	-6.242e-02	10	NC	1	NC	1
169		5	max	4.136	19	.046	19	4.896	16	6.242e-02	16	NC	1	NC	1
170			min	-4.287	13	-.055	13	-4.896	10	-6.242e-02	10	NC	1	NC	1
171	M18	1	max	1.81	19	.352	19	2.253	16	5.522e-02	16	NC	1	NC	1
172			min	-1.877	13	-.371	13	-2.253	10	-5.522e-02	10	NC	1	NC	1
173		2	max	1.81	19	.276	19	2.245	16	5.522e-02	16	NC	1	NC	1
174			min	-1.877	13	-.293	13	-2.245	10	-5.522e-02	10	NC	1	NC	1
175		3	max	1.81	19	.2	19	2.237	16	5.522e-02	16	NC	1	NC	1
176			min	-1.877	13	-.214	13	-2.237	10	-5.522e-02	10	NC	1	NC	1
177		4	max	1.81	19	.124	19	2.229	16	5.522e-02	16	NC	1	NC	1
178			min	-1.877	13	-.136	13	-2.229	10	-5.522e-02	10	NC	1	NC	1
179		5	max	1.81	19	.049	19	2.221	16	5.522e-02	16	NC	1	NC	1
180			min	-1.877	13	-.057	13	-2.221	10	-5.522e-02	10	NC	1	NC	1

Envelope AISC 14th(360-10): LRFD Steel Code Checks

	Member	Shape	Code Check	Loc[in]	LC	Shear Check	Loc[in]	Dir	LC	phi*Pnc [k]	phi*P...	phi*...	phi*...	...	Eqn
1	M9	PIPE_3.0	1.242	110	13	.140	110		10	20.785	65.205	5.749	5.749	1	H1-...
2	M15	PIPE_3.0	1.217	110	13	.137	110		10	20.785	65.205	5.749	5.749	1	H1-...
3	M3	PIPE_3.0	1.168	110	13	.148	110		13	20.785	65.205	5.749	5.749	...	H1-...
4	M8	HSS3x3x3	.443	0	13	.157	10.5	y	13	77.801	78.246	6.796	6.796	...	H1-...
5	M7	HSS3x3x3	.442	0	7	.154	10.5	y	7	77.801	78.246	6.796	6.796	...	H1-...
6	M14	HSS3x3x3	.430	0	13	.152	10.5	y	13	77.801	78.246	6.796	6.796	...	H1-...
7	M13	HSS3x3x3	.428	0	7	.150	10.5	y	7	77.801	78.246	6.796	6.796	...	H1-...
8	M1	HSS3x3x3	.427	0	16	.137	10.5	y	16	77.801	78.246	6.796	6.796	...	H1-...
9	M2	HSS3x3x3	.392	0	10	.137	10.5	y	10	77.801	78.246	6.796	6.796	...	H1-...
10	B1	PIPE_2.5	.223	32.375	13	.022	5.25		13	33.962	50.715	3.596	3.596	...	H1-...
11	B3	PIPE_2.5	.222	32.375	13	.022	5.25		13	33.962	50.715	3.596	3.596	1	H1-...
12	B4	PIPE_2.5	.222	32.375	13	.022	5.25		13	33.962	50.715	3.596	3.596	1	H1-...

USA ENGINEERING

2818 Cypress Ridge Blvd., Suite 110
Wesley Chapel, FL 33544
(813) 994-0365
www.usa-engineering.com

Existing Gamma Mount

Wind on Appurtenances (TIA-222-Rev G)

Site: M112_10069958

USA ENGINEERING

Basic Wind Specs

Structure: (M)onopole, (S)elf-support, (G)uyed, (A)ppurtenance :	A
h (ft), height of structure from base (only affects Gh for SS) :	46
Structure Class. I, II or III. (typically Class II) :	II
Exposure Category. B, C or D (FL typically is C) :	C
z (ft), AGL elevation of discrete appurtenance :	57
Topographic Category. 1,2,3,4 or 5 (FL typically is 1) :	1
H (ft), height of crest above surrounding terrain :	-
Z (ft), height AGL at the base of the structure :	-
V (mph). Basic Wind Speed, 3-second gust :	136
qz = 0.00256 Kz Kzt Kd V^2 I (psf) :	50.6

Tower type:	*Appurtenance*
Gh :	*1.00*
Kd :	*0.95*
I :	*1.00*
Zg :	*900*
α :	*9.5*
Kz min :	*0.85*
Kz max :	*2.01*
Kz :	*1.12*
Kt :	-
f :	-
Ke :	*1.0*
Kh :	-
Kzt :	*1.00*

Antenna Loads - Front / Side

Description (optional)	# Items	Element Height (in)	Element Width or Diam (in)	Flat or Round (F or R)	Ka	Aspect ratio (A.R.)	C *(rounds only)*	Ca for element *(actual wind)*	Ca (max) for A.R. *(wind N/A)*	EPA per element (sq.ft)	EPA (sq.ft) = CaAa Total (sq.ft)	Σ (curm.)	Σ (for elev)	Fa (lbs)
Position 1, 3 & 4 - Antenna														
ET-X-UW-68-14-65-18-iR-AT FRONT	1	72.0	12.0	F	1.00	6.00		1.36	1.36	8.13	8.13	8.13		
Exposed 2.5" pipe mount FRONT	1	12.0	2.9	R	1.00	4.17	35	0.71	0.74	0.18	0.18	8.31	8.31	**420**
ET-X-UW-68-14-65-18-iR-AT SIDE	1	72.0	6.3	F	1.00	11.43		1.55	1.55	4.88	4.88	4.88		
Exposed 2.5" pipe mount SIDE	1	84.0	2.9	R	1.00	29.17	35	1.11	1.20	2.02	2.02	6.89	6.89	**349**
Position 1 - RRUS														
RRUS 32 exposed FRONT	1	27.2	7.0	F	1.00	3.89		1.26	1.26	1.67	1.67	1.67	1.67	**84**
RRUS 32 exposed SIDE	1	27.2	12.1	F	1.00	2.25		1.20	1.20	2.74	2.74	2.74	2.74	**139**
Position 3 - RRUS														
RRUS 11 exposed FRONT	1	17.0	9.2	F	1.00	1.85		1.20	1.20	1.30	1.30	1.30		
4426 B66 exposed FRONT	1	14.96	5.8	F	1.00	2.58		1.20	1.20	0.73	0.73	2.03	2.03	**103**
RRUS 11 exposed SIDE	1	17.0	17.8	F	1.00	1.05		1.20	1.20	2.52	2.52	2.52		
4426 B66 exposed SIDE	0	14.96	13.2	F	1.00	1.13		1.20	1.20	1.64	0.00	2.52	2.52	**128**
Position 4 - RRUS														
4415 B25 exposed FRONT	1	14.96	5.4	F	1.00	2.78		1.21	1.21	0.68	0.68	0.68	0.68	**34**
4415 B25 exposed SIDE	1	14.96	13.19	F	1.00	1.13		1.20	1.20	1.64	1.64	1.64	1.64	**83**

Antenna Loads at Varying θ

Description (optional)	Wind force Fa (lbs)				
** Enter Fa (Front & Side) from above **	θ = 0° FRONT	θ = 30	θ = 45	θ = 60	θ = 90° SIDE

Mount member UDL's

Member width (in)	(F)lat (R)ound	UDL (lbs/ft)
3.00	F	**25**
3.50	R	**18**
2.38	R	**12**
2.88	R	**15**
4.00	R	**20**

Microwave Dish Wind Loads

Diameter dish (in)	Dish Type: P / PR / CS / G	Max Ca	Fa (lbs)

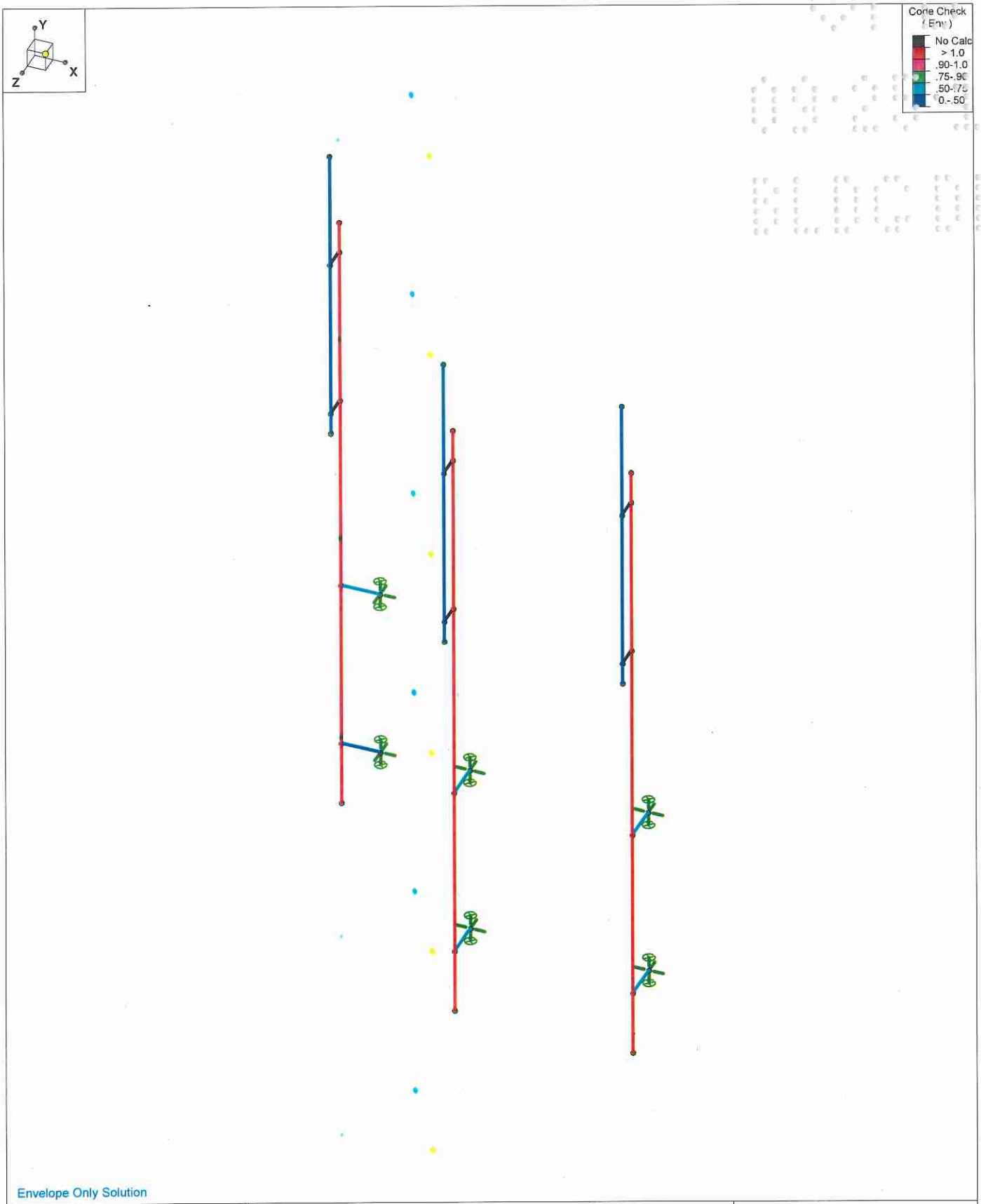

Envelope Only Solution

USA Engineering, Inc.	Gamma Mount	SK - 1
Nicole Hoffman, EI		Apr 25, 2018 at 2:47 PM
M112_10069958		Gamma Mount.r3d

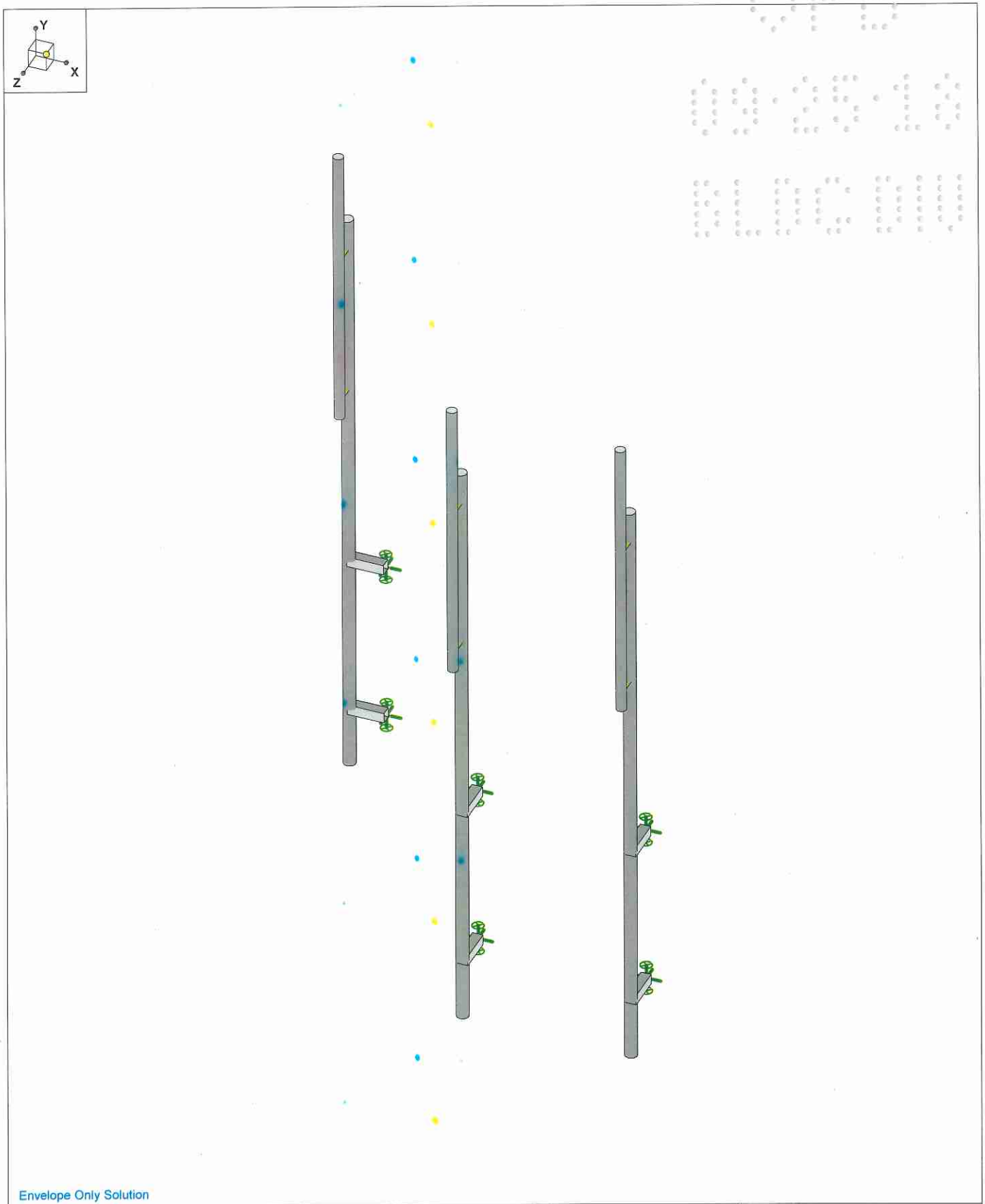

Envelope Only Solution

USA Engineering, Inc.	Beta Mount	SK - 2
Nicole Hoffman, EI		Apr 25, 2018 at 2:32 PM
M112_10069958		Beta Mount.r3d

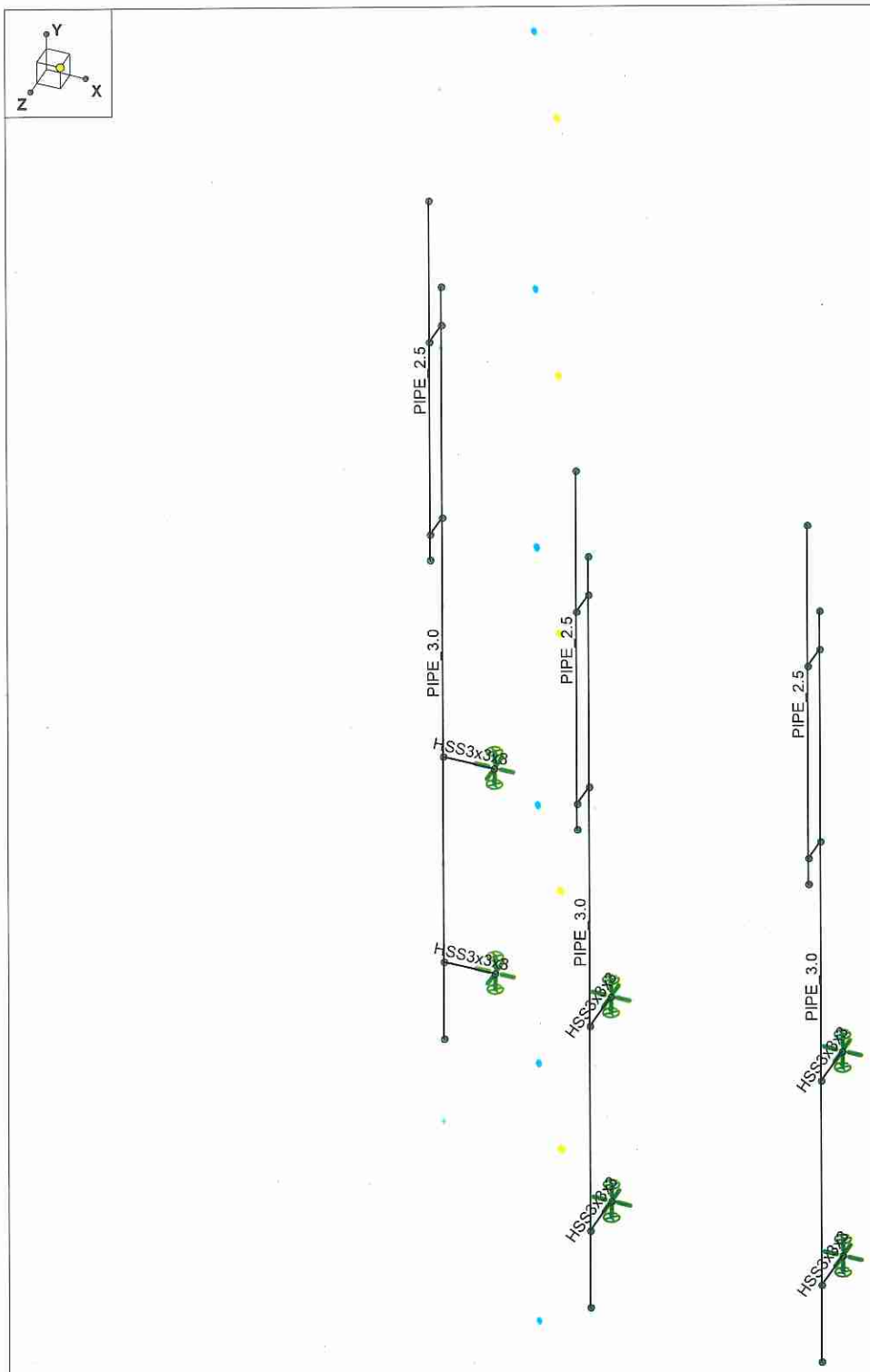

Envelope Only Solution

USA Engineering, Inc.	Gamma Mount	SK - 3
Nicole Hoffman, EI		Apr 25, 2018 at 2:47 PM
M112_10069958		Gamma Mount.r3d

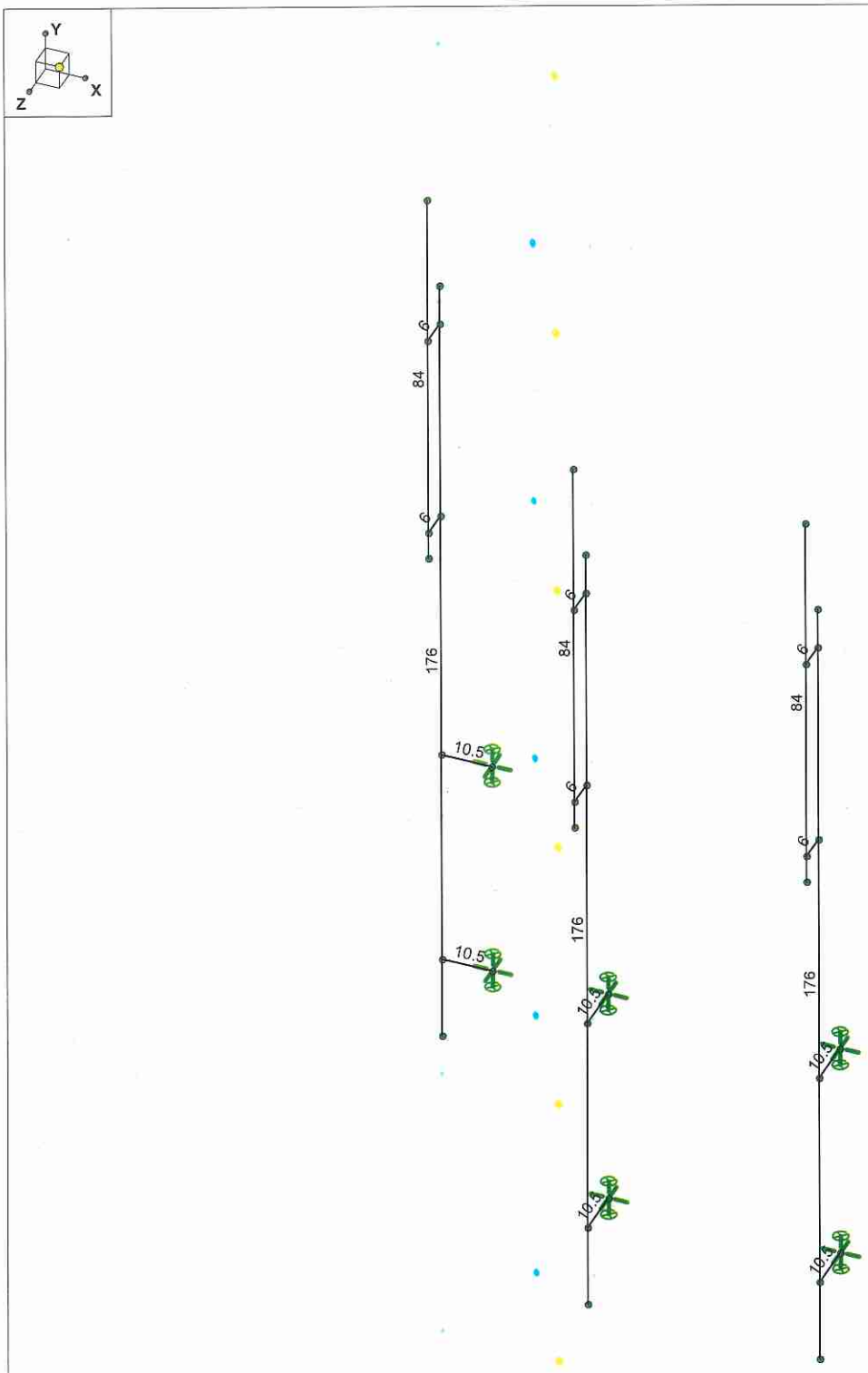

Member Length (in) Displayed
Envelope Only Solution

USA Engineering, Inc.	Gamma Mount	SK - 4
Nicole Hoffman, EI		Apr 25, 2018 at 2:47 PM
M112_10069958		Gamma Mount.r3d

(Global) Model Settings

Display Sections for Member Calcs	5
Max Internal Sections for Member Calcs	97
Include Shear Deformation?	Yes
Increase Nailing Capacity for Wind?	Yes
Include Warping?	Yes
Trans Load Btwn Intersecting Wood Wall?	Yes
Area Load Mesh (in^2)	144
Merge Tolerance (in)	.12
P-Delta Analysis Tolerance	0.50%
Include P-Delta for Walls?	Yes
Automatically Iterate Stiffness for Walls?	Yes
Max Iterations for Wall Stiffness	3
Gravity Acceleration (in/sec^2)	386.4
Wall Mesh Size (in)	12
Eigensolution Convergence Tol. (1.E-)	4
Vertical Axis	Y
Global Member Orientation Plane	XZ
Static Solver	Sparse Accelerated
Dynamic Solver	Accelerated Solver

Hot Rolled Steel Code	AISC 14th(360-10): LRFD
Adjust Stiffness?	Yes(Iterative)
RISAConnection Code	AISC 14th(360-10): LRFD
Cold Formed Steel Code	AISI S100-16: LRFD
Wood Code	AF&PA NDS-05/08: ASD
Wood Temperature	< 100F
Concrete Code	ACI 318-11
Masonry Code	ACI 530-08: ASD
Aluminum Code	AA ADM1-05: ASD - Building
	AISC 14th(360-10): LRFD

Number of Shear Regions	4
Region Spacing Increment (in)	4
Biaxial Column Method	Exact Integration
Parme Beta Factor (PCA)	.65
Concrete Stress Block	Rectangular
Use Cracked Sections?	Yes
Use Cracked Sections Slab?	Yes
Bad Framing Warnings?	No
Unused Force Warnings?	Yes
Min 1 Bar Diam. Spacing?	No
Concrete Rebar Set	REBAR_SET_ASTMA615
Min % Steel for Column	1
Max % Steel for Column	8

(Global) Model Settings, Continued

Seismic Code	ASCE 7-10
Seismic Base Elevation (in)	Not Entered
Add Base Weight?	Yes
Ct X	.02
Ct Z	.02
T X (sec)	Not Entered
T Z (sec)	Not Entered
R X	3
R Z	3
Ct Exp. X	.75
Ct Exp. Z	.75
SD1	1
SDS	1
S1	1
TL (sec)	5
Risk Cat	I or II
Drift Cat	Other
Om Z	1
Om X	1
Cd Z	1
Cd X	1
Rho Z	1
Rho X	1

Joint Coordinates and Temperatures

	Label	X [in]	Y [in]	Z [in]	Temp [F]	Detach From Diaphragm
1	N1	-12	0	-72	0	
2	N2	-12	176	-72	0	
3	N3	-12	18	-72	0	
4	N4	-12	66	-72	0	
5	N5	-12	167	-72	0	
6	N6	-12	122	-72	0	
7	N7	-12	167	-66	0	
8	N8	-12	122	-66	0	
9	N9	-12	200	-66	0	
10	N10	-12	116	-66	0	
11	N11	-1.5	18	-72	0	
12	N12	-1.5	66	-72	0	
13	N13	48	0	0	0	
14	N14	48	176	0	0	
15	N15	48	18	0	0	
16	N16	48	66	0	0	
17	N17	48	167	0	0	
18	N18	48	122	0	0	
19	N19	48	167	6	0	
20	N20	48	122	6	0	
21	N21	48	200	6	0	
22	N22	48	116	6	0	
23	N23	48	18	-10.5	0	
24	N24	48	66	-10.5	0	
25	N25	96	0	0	0	
26	N26	96	176	0	0	
27	N27	96	18	0	0	
28	N28	96	66	0	0	
29	N29	96	167	0	0	
30	N30	96	122	0	0	

Joint Coordinates and Temperatures (Continued)

	Label	X [in]	Y [in]	Z [in]	Temp [F]	Detach From Diaphragm
31	N31	96	167	6	0	
32	N32	96	122	6	0	
33	N33	96	200	6	0	
34	N34	96	116	6	0	
35	N35	96	18	-10.5	0	
36	N36	96	66	-10.5	0	

Joint Boundary Conditions

	Joint Label	X [k/in]	Y [k/in]	Z [k/in]	X Rot.[k-ft/rad]	Y Rot.[k-ft/rad]	Z Rot.[k-ft/rad]
1	N12	Reaction	Reaction	Reaction		Reaction	
2	N11	Reaction	Reaction	Reaction		Reaction	
3	N23	Reaction	Reaction	Reaction		Reaction	
4	N24	Reaction	Reaction	Reaction		Reaction	
5	N35	Reaction	Reaction	Reaction		Reaction	
6	N36	Reaction	Reaction	Reaction		Reaction	

Hot Rolled Steel Properties

	Label	E [ksi]	G [ksi]	Nu	Therm (\1E5 F)	Density[k/ft^3]	Yield[ksi]	Ry	Fu[ksi]	Rt
1	A36 Gr.36	29000	11154	.3	.65	.49	36	1.5	58	1.2
2	A572 Gr.50	29000	11154	.3	.65	.49	50	1.1	65	1.1
3	A992	29000	11154	.3	.65	.49	50	1.1	65	1.1
4	A500 Gr.42	29000	11154	.3	.65	.49	42	1.4	58	1.3
5	A500 Gr.46	29000	11154	.3	.65	.49	46	1.4	58	1.3
6	A53 Gr.B	29000	11154	.3	.65	.49	35	1.6	60	1.2

Member Primary Data

	Label	I Joint	J Joint	K Joint	Rotate(d...	Section/Shape	Type	Design List	Material	Design Rules
1	M1	N4	N12			HSS3x3x3	Beam	SquareTube	A500 Gr.46	Typical
2	M2	N3	N11			HSS3x3x3	Beam	SquareTube	A500 Gr.46	Typical
3	M3	N2	N1			PIPE_3.0	Beam	Pipe	A53 Gr.B	Typical
4	G1	N9	N10			PIPE_2.5	Beam	Pipe	A53 Gr.B	Typical
5	M5	N7	N5			RIGID	None	None	RIGID	Typical
6	M6	N8	N6			RIGID	None	None	RIGID	Typical
7	M7	N16	N24			HSS3x3x3	Beam	SquareTube	A500 Gr.46	Typical
8	M8	N15	N23			HSS3x3x3	Beam	SquareTube	A500 Gr.46	Typical
9	M9	N14	N13			PIPE_3.0	Beam	Pipe	A53 Gr.B	Typical
10	G2	N21	N22			PIPE_2.5	Beam	Pipe	A53 Gr.B	Typical
11	M11	N19	N17			RIGID	None	None	RIGID	Typical
12	M12	N20	N18			RIGID	None	None	RIGID	Typical
13	M13	N28	N36			HSS3x3x3	Beam	SquareTube	A500 Gr.46	Typical
14	M14	N27	N35			HSS3x3x3	Beam	SquareTube	A500 Gr.46	Typical
15	M15	N26	N25			PIPE_3.0	Beam	Pipe	A53 Gr.B	Typical
16	G3	N33	N34			PIPE_2.5	Beam	Pipe	A53 Gr.B	Typical
17	M17	N31	N29			RIGID	None	None	RIGID	Typical
18	M18	N32	N30			RIGID	None	None	RIGID	Typical

Member Advanced Data

	Label	I Release	J Release	I Offset[in]	J Offset[in]	T/C Only	Physical	Analysis ...	Inactive	Seismic Design ...
1	M1						Yes			None
2	M2						Yes			None
3	M3						Yes			None

Member Advanced Data (Continued)

	Label	I Release	J Release	I Offset[in]	J Offset[in]	T/C Only	Physical	Analysis ...	Inactive	Seismic Design ...
4	G1						Yes			None
5	M5						Yes			None
6	M6						Yes			None
7	M7						Yes			None
8	M8						Yes			None
9	M9						Yes			None
10	G2						Yes			None
11	M11						Yes			None
12	M12						Yes			None
13	M13						Yes			None
14	M14						Yes			None
15	M15						Yes			None
16	G3						Yes			None
17	M17						Yes			None
18	M18						Yes			None

Hot Rolled Steel Design Parameters

	Label	Shape	Length[in]	Lbyy[in]	Lbzz[in]	Lcomp top[in]	Lcomp bot[in]	L-torq...	Kyy	Kzz	Cb	Function
1	M1	HSS3x3x3	10.5			Lbyy						Lateral
2	M2	HSS3x3x3	10.5			Lbyy						Lateral
3	M3	PIPE_3.0	176			Lbyy						Lateral
4	G1	PIPE_2.5	84			Lbyy						Lateral
5	M7	HSS3x3x3	10.5			Lbyy						Lateral
6	M8	HSS3x3x3	10.5			Lbyy						Lateral
7	M9	PIPE_3.0	176			Lbyy						Lateral
8	G2	PIPE_2.5	84			Lbyy						Lateral
9	M13	HSS3x3x3	10.5			Lbyy						Lateral
10	M14	HSS3x3x3	10.5			Lbyy						Lateral
11	M15	PIPE_3.0	176			Lbyy						Lateral
12	G3	PIPE_2.5	84			Lbyy						Lateral

Basic Load Cases

	BLC Description	Category	...	Y Grav...	Z Grav...	Joint	Point	Distribut...	Area(Mem...	Surface(Plate/Wall)
1	DEAD LOAD	DL		-1			9			
2	LIVE LOAD (Lv)	LL								
3	WIND FRONT	WLZ					9	9		
4	WIND SIDE	WLX					9	9		
5	Wind Front @ 30 ...	WLZ					9	9		
6	Wind Side @ 30 ...	WLX					9	9		
7	UDL	LL								
8	LIVE LOAD (Lm)	LL				1				

Load Combinations

	Description	Sol...	PD...	SR...	B...	Fa...	B...	Fa...	B...	Fa...	B...	Fa...	B...	Fa...	B...	Fa...	B...	Fa...	B...	Fa...	B...	Fa...	B...	Fa...
1	DEAD LOAD	Yes	Y		1	1																		
2	1.4 DEAD LOAD	Yes	Y		1	1.4																		
3	Dead + Lv	Yes	Y		1	1	2	1																
4	1.2 DEAD LOAD + 1.5 Lv	Yes	Y		1	1.2	2	1.5																
5	DEAD LOAD + UDL	Yes	Y		1	1											7	1						
6	1.2 DEAD LOAD + 1.5 UDL	Yes	Y		1	1.2											7	1.5						
7	1.2 DEAD LOAD + 1.6 WIND 0	Yes	Y		1	1.2			3	1.6														
8	1.2 DEAD LOAD + 1.6 WIND 30	Yes	Y		1	1.2			3	1.39	4	.8												

Load Combinations (Continued)

	Description	Sol...	PD...	SR...	B...	Fa...	B...	Fa...	B...	Fa...	B...	Fa...	B...	Fa...	B...	Fa...	B...	Fa...	B...	Fa...	B...	Fa...	B...	Fa...
9	1.2 DEAD LOAD + 1.6 WIND 60	Yes	Y		1	1.2			3	.8	4	1.39												
10	1.2 DEAD LOAD + 1.6 WIND 90	Yes	Y		1	1.2					4	1.6												
11	1.2 DEAD LOAD + 1.6 WIND 120	Yes	Y		1	1.2			3	-.8	4	1.39												
12	1.2 DEAD LOAD + 1.6 WIND 150	Yes	Y		1	1.2			3	-1....	4	.8												
13	1.2 DEAD LOAD + 1.6 WIND 180	Yes	Y		1	1.2			3	-1.6														
14	1.2 DEAD LOAD + 1.6 WIND 210	Yes	Y		1	1.2			3	-1....	4	-.8												
15	1.2 DEAD LOAD + 1.6 WIND 240	Yes	Y		1	1.2			3	-.8	4	-1....												
16	1.2 DEAD LOAD + 1.6 WIND 270	Yes	Y		1	1.2					4	-1.6												
17	1.2 DEAD LOAD + 1.6 WIND 300	Yes	Y		1	1.2			3	.8	4	-1....												
18	1.2 DEAD LOAD + 1.6 WIND 330	Yes	Y		1	1.2			3	1.39	4	-.8												
19	0.9 DEAD LOAD + 1.6 WIND 0	Yes	Y		1	.9			3	1.6														
20	0.9 DEAD LOAD + 1.6 WIND 30	Yes	Y		1	.9			3	1.39	4	.8												
21	0.9 DEAD LOAD + 1.6 WIND 60	Yes	Y		1	.9			3	.8	4	1.39												
22	0.9 DEAD LOAD + 1.6 WIND 90	Yes	Y		1	.9					4	1.6												
23	0.9 DEAD LOAD + 1.6 WIND 120	Yes	Y		1	.9			3	-.8	4	1.39												
24	0.9 DEAD LOAD + 1.6 WIND 150	Yes	Y		1	.9			3	-1....	4	.8												
25	0.9 DEAD LOAD + 1.6 WIND 180	Yes	Y		1	.9			3	-1.6														
26	0.9 DEAD LOAD + 1.6 WIND 210	Yes	Y		1	.9			3	-1....	4	-.8												
27	0.9 DEAD LOAD + 1.6 WIND 240	Yes	Y		1	.9			3	-.8	4	-1....												
28	0.9 DEAD LOAD + 1.6 WIND 270	Yes	Y		1	.9					4	-1.6												
29	0.9 DEAD LOAD + 1.6 WIND 300	Yes	Y		1	.9			3	.8	4	-1....												
30	0.9 DEAD LOAD + 1.6 WIND 330	Yes	Y		1	.9			3	1.39	4	-.8												
31	1.2 DEAD LOAD + 1.5 LIVE LOA...	Yes	Y		1	1.2							5	1					8	1.5				
32	1.2 DEAD LOAD + 1.5 LIVE LOA...	Yes	Y		1	1.2							5	.869	6	.5			8	1.5				
33	1.2 DEAD LOAD + 1.5 LIVE LOA...	Yes	Y		1	1.2							5	.5	6	.869			8	1.5				
34	1.2 DEAD LOAD + 1.5 LIVE LOA...	Yes	Y		1	1.2									6	1			8	1.5				
35	1.2 DEAD LOAD + 1.5 LIVE LOA...	Yes	Y		1	1.2							5	-.5	6	.869			8	1.5				
36	1.2 DEAD LOAD + 1.5 LIVE LOA...	Yes	Y		1	1.2							5	-.8...	6	.5			8	1.5				
37	1.2 DEAD LOAD + 1.5 LIVE LOA...	Yes	Y		1	1.2							5	-1					8	1.5				
38	1.2 DEAD LOAD + 1.5 LIVE LOA...	Yes	Y		1	1.2							5	-.8...	6	-.5			8	1.5				
39	1.2 DEAD LOAD + 1.5 LIVE LOA...	Yes	Y		1	1.2							5	-.5	6	-.8...			8	1.5				
40	1.2 DEAD LOAD + 1.5 LIVE LOA...	Yes	Y		1	1.2									6	-1			8	1.5				
41	1.2 DEAD LOAD + 1.5 LIVE LOA...	Yes	Y		1	1.2							5	.5	6	-.8...			8	1.5				
42	1.2 DEAD LOAD + 1.5 LIVE LOA...	Yes	Y		1	1.2							5	.869	6	-.5			8	1.5				
43	0.9 DEAD LOAD + 1.5 LIVE LOA...	Yes	Y		1	.9							5	1					8	1.5				
44	0.9 DEAD LOAD + 1.5 LIVE LOA...	Yes	Y		1	.9							5	.869	6	.5			8	1.5				
45	0.9 DEAD LOAD + 1.5 LIVE LOA...	Yes	Y		1	.9							5	.5	6	.869			8	1.5				
46	0.9 DEAD LOAD + 1.5 LIVE LOA...	Yes	Y		1	.9									6	1			8	1.5				
47	0.9 DEAD LOAD + 1.5 LIVE LOA...	Yes	Y		1	.9							5	-.5	6	.869			8	1.5				
48	0.9 DEAD LOAD + 1.5 LIVE LOA...	Yes	Y		1	.9							5	-.8...	6	.5			8	1.5				
49	0.9 DEAD LOAD + 1.5 LIVE LOA...	Yes	Y		1	.9							5	-1					8	1.5				
50	0.9 DEAD LOAD + 1.5 LIVE LOA...	Yes	Y		1	.9							5	-.8...	6	-.5			8	1.5				
51	0.9 DEAD LOAD + 1.5 LIVE LOA...	Yes	Y		1	.9							5	-.5	6	-.8...			8	1.5				
52	0.9 DEAD LOAD + 1.5 LIVE LOA...	Yes	Y		1	.9									6	-1			8	1.5				
53	0.9 DEAD LOAD + 1.5 LIVE LOA...	Yes	Y		1	.9							5	.5	6	-.8...			8	1.5				
54	0.9 DEAD LOAD + 1.5 LIVE LOA...	Yes	Y		1	.9							5	.869	6	-.5			8	1.5				

Joint Loads and Enforced Displacements (BLC 8 : LIVE LOAD (Lm))

	Joint Label	L,D,M	Direction	Magnitude[(k,k-ft), (in,rad), (k*s^2/in, k*s...
1	N9	L	Y	-.5

Member Point Loads (BLC 1 : DEAD LOAD)

	Member Label	Direction	Magnitude[k,k-ft]	Location[in,%]
1	G1	Y	-.05	%5
2	G2	Y	-.05	%5
3	G3	Y	-.05	%5
4	G1	Y	-.05	%95
5	G2	Y	-.05	%95
6	G3	Y	-.05	%95
7	M3	Y	-.1	%55
8	M9	Y	-.12	%55
9	M15	Y	-.06	%55

Member Point Loads (BLC 3 : WIND FRONT)

	Member Label	Direction	Magnitude[k,k-ft]	Location[in,%]
1	G1	Z	-.275	%5
2	G2	Z	-.275	%5
3	G3	Z	-.275	%5
4	G1	Z	-.275	%95
5	G2	Z	-.275	%95
6	G3	Z	-.275	%95
7	M3	Z	-.108	%55
8	M9	Z	-.103	%55
9	M15	Z	-.034	%55

Member Point Loads (BLC 4 : WIND SIDE)

	Member Label	Direction	Magnitude[k,k-ft]	Location[in,%]
1	G1	X	-.218	%5
2	G2	X	-.218	%5
3	G3	X	-.218	%5
4	G1	X	-.218	%95
5	G2	X	-.218	%95
6	G3	X	-.218	%95
7	M3	X	-.156	%55
8	M9	X	-.128	%55
9	M15	X	-.083	%55

Member Point Loads (BLC 5 : Wind Front @ 30 mph)

	Member Label	Direction	Magnitude[k,k-ft]	Location[in,%]
1	G1	Z	-.013	%5
2	G2	Z	-.013	%5
3	G3	Z	-.013	%5
4	G1	Z	-.013	%95
5	G2	Z	-.013	%95
6	G3	Z	-.013	%95
7	M3	Z	-.005	%55
8	M9	Z	-.005	%55
9	M15	Z	-.002	%55

Member Point Loads (BLC 6 : Wind Side @ 30 mph)

	Member Label	Direction	Magnitude[k,k-ft]	Location[in,%]
1	G1	X	-.011	%5
2	G2	X	-.011	%5
3	G3	X	-.011	%5
4	G1	X	-.011	%95
5	G2	X	-.011	%95
6	G3	X	-.011	%95

Member Point Loads (BLC 6 : Wind Side @ 30 mph) (Continued)

	Member Label	Direction	Magnitude[k,k-ft]	Location[in,%]
7	M3	X	-.008	%55
8	M9	X	-.006	%55
9	M15	X	-.004	%55

Member Distributed Loads (BLC 3 : WIND FRONT)

	Member Label	Direction	Start Magnitude[k/ft,F,ksf]	End Magnitude[k/ft,F,ksf]	Start Loca...	End Location[in,...
1	M1	PZ	-.025	-.025	0	0
2	M2	PZ	-.025	-.025	0	0
3	M7	PZ	-.025	-.025	0	0
4	M8	PZ	-.025	-.025	0	0
5	M13	PZ	-.025	-.025	0	0
6	M14	PZ	-.025	-.025	0	0
7	M3	PZ	-.018	-.018	0	0
8	M9	PZ	-.018	-.018	0	0
9	M15	PZ	-.018	-.018	0	0

Member Distributed Loads (BLC 4 : WIND SIDE)

	Member Label	Direction	Start Magnitude[k/ft,F,ksf]	End Magnitude[k/ft,F,ksf]	Start Loca...	End Location[in,...
1	M1	PX	-.025	-.025	0	0
2	M2	PX	-.025	-.025	0	0
3	M7	PX	-.025	-.025	0	0
4	M8	PX	-.025	-.025	0	0
5	M13	PX	-.025	-.025	0	0
6	M14	PX	-.025	-.025	0	0
7	M3	PX	-.018	-.018	0	0
8	M9	PX	-.018	-.018	0	0
9	M15	PX	-.018	-.018	0	0

Member Distributed Loads (BLC 5 : Wind Front @ 30 mph)

	Member Label	Direction	Start Magnitude[k/ft,F,ksf]	End Magnitude[k/ft,F,ksf]	Start Loca...	End Location[in,...
1	M1	PZ	-.001	-.001	0	0
2	M2	PZ	-.001	-.001	0	0
3	M7	PZ	-.001	-.001	0	0
4	M8	PZ	-.001	-.001	0	0
5	M13	PZ	-.001	-.001	0	0
6	M14	PZ	-.001	-.001	0	0
7	M3	PZ	-.000882	-.000882	0	0
8	M9	PZ	-.000882	-.000882	0	0
9	M15	PZ	-.000882	-.000882	0	0

Member Distributed Loads (BLC 6 : Wind Side @ 30 mph)

	Member Label	Direction	Start Magnitude[k/ft,F,ksf]	End Magnitude[k/ft,F,ksf]	Start Loca...	End Location[in,...
1	M1	PX	-.001	-.001	0	0
2	M2	PX	-.001	-.001	0	0
3	M7	PX	-.001	-.001	0	0
4	M8	PX	-.001	-.001	0	0
5	M13	PX	-.001	-.001	0	0
6	M14	PX	-.001	-.001	0	0
7	M3	PX	-.000882	-.000882	0	0
8	M9	PX	-.000882	-.000882	0	0
9	M15	PX	-.000882	-.000882	0	0

Member Area Loads

Joint A	Joint B	Joint C	Joint D	Direction	Distribution	Magnitude[ksf]
No Data to Print ...						

Envelope Joint Reactions

	Joint		X [k]	LC	Y [k]	LC	Z [k]	LC	MX [k-ft]	LC	MY [k-ft]	LC	MZ [k-ft]	LC
1	N12	max	3.082	10	3.478	16	3.449	7	0	1	2.62	7	0	1
2		min	-2.921	28	-3.072	22	-3.473	13	0	1	-2.636	13	0	1
3	N11	max	1.55	28	3.451	10	1.93	13	0	1	1.318	13	0	1
4		min	-1.711	10	-3.098	28	-1.906	7	0	1	-1.3	7	0	1
5	N23	max	1.581	16	4.096	13	2.053	13	0	1	1.015	16	0	1
6		min	-1.581	10	-3.688	19	-1.86	19	0	1	-1.015	10	0	1
7	N24	max	2.977	10	4.08	7	3.326	19	0	1	2.556	10	0	1
8		min	-2.977	16	-3.685	25	-3.519	13	0	1	-2.556	16	0	1
9	N35	max	1.559	16	4.001	13	2.006	13	0	1	1.004	16	0	1
10		min	-1.559	10	-3.654	19	-1.84	19	0	1	-1.004	10	0	1
11	N36	max	2.883	10	3.982	7	3.196	19	0	1	2.482	10	0	1
12		min	-2.883	16	-3.653	25	-3.361	13	0	1	-2.482	16	0	1
13	Totals:	max	4.092	22	1.996	31	4.364	19						
14		min	-4.092	28	.935	25	-4.364	25						

Envelope Member Section Deflections Strength

	Member	Sec		x [in]	LC	y [in]	LC	z [in]	LC	x Rotate ...	LC	(n) L/y R...	LC	(n) L/z R...	LC
1	M1	1	max	0	28	.052	28	.022	13	2.483e-02	13	3049.424	25	NC	1
2			min	0	10	-.06	10	-.022	7	-2.454e-02	7	174.001	10	466.985	13
3		2	max	0	28	.035	28	.015	13	2.483e-02	13	3806.96	25	NC	1
4			min	0	10	-.042	10	-.015	7	-2.454e-02	7	250.726	10	701.173	13
5		3	max	0	28	.022	28	.008	13	2.483e-02	13	5461.271	25	NC	1
6			min	0	10	-.026	10	-.008	7	-2.454e-02	7	399.092	10	1313.39	13
7		4	max	0	28	.01	28	.003	13	2.483e-02	13	NC	19	NC	1
8			min	0	10	-.013	10	-.003	7	-2.454e-02	7	828.586	10	3981.13	13
9		5	max	0	1	0	1	0	1	2.483e-02	13	NC	1	NC	1
10			min	0	1	0	1	0	1	-2.454e-02	7	NC	1	NC	1
11	M2	1	max	0	10	.049	28	.011	7	1.098e-02	7	3169.313	25	NC	1
12			min	0	28	-.057	10	-.011	13	-1.111e-02	13	184.431	10	974.73	13
13		2	max	0	10	.04	28	.007	7	1.098e-02	7	3950.756	25	NC	1
14			min	0	28	-.047	10	-.007	13	-1.111e-02	13	225.639	10	1424.771	13
15		3	max	0	10	.029	28	.004	7	1.098e-02	7	5662.149	25	NC	1
16			min	0	28	-.033	10	-.004	13	-1.111e-02	13	319.637	10	2606.735	13
17		4	max	0	10	.015	28	.001	7	1.098e-02	7	NC	19	NC	1
18			min	0	28	-.017	10	-.001	13	-1.111e-02	13	618.63	10	7685.638	13
19		5	max	0	1	0	1	0	1	1.098e-02	7	NC	1	NC	1
20			min	0	1	0	1	0	1	-1.111e-02	13	NC	1	NC	1
21	M3	1	max	.061	10	5.168	10	7.583	7	5.252e-03	21	NC	1	NC	1
22			min	-.052	28	-5.107	16	-7.696	13	-5.738e-03	15	NC	1	NC	1
23		2	max	.061	10	2.5	10	4	7	5.065e-03	21	NC	1	9436.437	22
24			min	-.052	28	-2.463	16	-4.056	13	-5.173e-03	15	129.115	10	99.81	13
25		3	max	.06	10	.451	10	.889	7	3.194e-03	8	NC	1	5781.755	22
26			min	-.052	28	-.439	28	-.9	13	-3.196e-03	14	83.51	10	57.843	13
27		4	max	.059	10	.035	16	.212	13	9.573e-04	8	NC	1	8334.078	22
28			min	-.051	28	-.035	10	-.21	7	-9.585e-04	14	136.552	10	77.24	13
29		5	max	.057	10	.043	28	.187	7	1.033e-03	13	NC	1	NC	1
30			min	-.049	28	-.051	10	-.19	13	-1.017e-03	7	NC	1	NC	1
31	G1	1	max	.496	13	6.805	10	9.657	7	5.252e-03	21	NC	1	NC	1
32			min	-.479	19	-6.731	16	-9.801	13	-5.738e-03	15	NC	1	NC	1

Envelope Member Section Deflections Strength (Continued)

	Member	Sec		x [in]	LC	y [in]	LC	z [in]	LC	x Rotate ...	LC	(n) L/y R...	LC	(n) L/z R...	LC
33		2	max	.495	13	5.404	10	7.85	7	5.252e-03	21	NC	1	NC	1
34			min	-.479	19	-5.342	16	-7.967	13	-5.738e-03	15	750.228	10	1169.437	13
35		3	max	.495	13	4.072	10	6.121	7	5.204e-03	21	NC	1	NC	1
36			min	-.478	19	-4.021	16	-6.211	13	-5.592e-03	15	541.399	10	1280.371	13
37		4	max	.493	13	2.813	10	4.405	7	5.092e-03	21	NC	1	NC	1
38			min	-.476	19	-2.773	16	-4.468	13	-5.254e-03	15	667.545	10	1806.269	13
39		5	max	.491	13	1.65	10	2.716	7	5.012e-03	21	NC	1	NC	1
40			min	-.475	19	-1.622	16	-2.753	13	-5.011e-03	15	NC	1	NC	1
41	M5	1	max	6.854	7	.479	19	4.577	16	6.216e-02	16	NC	1	NC	1
42			min	-6.955	13	-.495	13	-4.633	10	-6.272e-02	10	NC	1	NC	1
43		2	max	6.854	7	.358	19	4.569	16	6.216e-02	16	NC	1	NC	1
44			min	-6.955	13	-.372	13	-4.625	10	-6.272e-02	10	NC	1	NC	1
45		3	max	6.854	7	.236	19	4.562	16	6.216e-02	16	NC	1	NC	1
46			min	-6.955	13	-.249	13	-4.618	10	-6.272e-02	10	NC	1	NC	1
47		4	max	6.854	7	.127	30	4.555	16	6.216e-02	16	NC	1	NC	1
48			min	-6.955	13	-.137	12	-4.611	10	-6.272e-02	10	NC	1	NC	1
49		5	max	6.854	7	.052	28	4.547	16	6.216e-02	16	NC	1	NC	1
50			min	-6.955	13	-.061	10	-4.603	10	-6.272e-02	10	NC	1	NC	1
51	M6	1	max	3.195	7	.475	19	1.942	16	5.334e-02	16	NC	1	NC	1
52			min	-3.239	13	-.491	13	-1.973	10	-5.39e-02	10	NC	1	NC	1
53		2	max	3.195	7	.355	19	1.935	16	5.334e-02	16	NC	1	NC	1
54			min	-3.239	13	-.37	13	-1.966	10	-5.39e-02	10	NC	1	NC	1
55		3	max	3.195	7	.236	19	1.929	16	5.334e-02	16	NC	1	NC	1
56			min	-3.239	13	-.248	13	-1.96	10	-5.39e-02	10	NC	1	NC	1
57		4	max	3.195	7	.128	30	1.922	16	5.334e-02	16	NC	1	NC	1
58			min	-3.239	13	-.139	12	-1.953	10	-5.39e-02	10	NC	1	NC	1
59		5	max	3.195	7	.052	28	1.916	16	5.334e-02	16	NC	1	NC	1
60			min	-3.239	13	-.061	10	-1.947	10	-5.39e-02	10	NC	1	NC	1
61	M7	1	max	0	19	.062	19	.023	16	2.069e-02	16	4946.66	43	NC	1
62			min	0	13	-.072	13	-.023	10	-2.069e-02	10	146.822	13	462.343	10
63		2	max	0	19	.042	19	.015	16	2.069e-02	16	5597.374	43	NC	1
64			min	0	13	-.05	13	-.015	10	-2.069e-02	10	211.863	13	710.989	10
65		3	max	0	19	.026	19	.008	16	2.069e-02	16	7575.628	43	NC	1
66			min	0	13	-.031	13	-.008	10	-2.069e-02	10	337.626	13	1361.728	10
67		4	max	0	19	.012	19	.002	16	2.069e-02	16	NC	43	NC	1
68			min	0	13	-.015	13	-.002	10	-2.069e-02	10	701.515	13	4242.538	10
69		5	max	0	1	0	1	0	1	2.069e-02	16	NC	1	NC	1
70			min	0	1	0	1	0	1	-2.069e-02	10	NC	1	NC	1
71	M8	1	max	0	13	.059	19	.008	10	9.163e-03	10	5067.802	43	NC	1
72			min	0	19	-.067	13	-.008	16	-9.163e-03	16	155.653	13	1299.613	10
73		2	max	0	13	.048	19	.006	10	9.163e-03	10	6407.829	43	NC	1
74			min	0	19	-.055	13	-.006	16	-9.163e-03	16	190.394	13	1868.388	10
75		3	max	0	13	.034	19	.003	10	9.163e-03	10	9267.5	43	NC	1
76			min	0	19	-.039	13	-.003	16	-9.163e-03	16	269.676	13	3370.581	10
77		4	max	0	13	.018	19	.001	10	9.163e-03	10	NC	31	NC	1
78			min	0	19	-.02	13	-.001	16	-9.163e-03	16	521.899	13	9781.161	10
79		5	max	0	1	0	1	0	1	9.163e-03	10	NC	1	NC	1
80			min	0	1	0	1	0	1	-9.163e-03	16	NC	1	NC	1
81	M9	1	max	.069	13	6.594	10	5.826	19	7.041e-03	10	NC	1	NC	1
82			min	-.059	19	-6.594	16	-5.985	13	-7.041e-03	16	NC	1	NC	1
83		2	max	.071	13	3.362	10	2.938	19	6.604e-03	10	NC	1	NC	32
84			min	-.061	19	-3.362	16	-3.021	13	-6.604e-03	16	108.497	10	121.194	13
85		3	max	.072	13	.752	10	.523	19	4.232e-03	10	NC	1	NC	33
86			min	-.062	19	-.752	16	-.541	13	-4.232e-03	16	67.079	10	72.704	13
87		4	max	.07	13	.174	16	.042	13	1.183e-03	10	NC	1	NC	32
88			min	-.061	19	-.174	10	-.041	19	-1.183e-03	16	90.714	10	117.876	13
89		5	max	.067	13	.157	10	.061	13	7.03e-04	16	NC	1	NC	1

Envelope Member Section Deflections Strength (Continued)

	Member	Sec		x [in]	LC	y [in]	LC	z [in]	LC	x Rotate ...	LC	(n) L/y R...	LC	(n) L/z R...	LC
90			min	-.059	19	-.157	16	-.051	19	-7.03e-04	10	NC	1	NC	1
91	G2	1	max	.47	13	8.552	10	7.521	19	7.041e-03	10	NC	1	NC	1
92			min	-.45	19	-8.552	16	-7.721	13	-7.041e-03	16	NC	1	NC	1
93		2	max	.47	13	6.882	10	6.046	19	7.041e-03	10	NC	1	NC	1
94			min	-.45	19	-6.882	16	-6.21	13	-7.041e-03	16	748.678	10	1170.887	13
95		3	max	.469	13	5.28	10	4.649	19	6.929e-03	10	NC	1	NC	1
96			min	-.449	19	-5.28	16	-4.777	13	-6.929e-03	16	540.215	10	1281.358	13
97		4	max	.467	13	3.752	10	3.265	19	6.667e-03	10	NC	1	NC	1
98			min	-.447	19	-3.752	16	-3.357	13	-6.667e-03	16	665.972	10	1807.819	13
99		5	max	.466	13	2.32	10	1.908	19	6.48e-03	10	NC	1	NC	1
100			min	-.446	19	-2.32	16	-1.964	13	-6.48e-03	16	NC	1	NC	1
101	M11	1	max	5.239	19	.45	19	5.956	16	7.553e-02	16	NC	1	NC	1
102			min	-5.382	13	-.47	13	-5.956	10	-7.553e-02	10	NC	1	NC	1
103		2	max	5.239	19	.352	19	5.945	16	7.553e-02	16	NC	1	NC	1
104			min	-5.382	13	-.37	13	-5.945	10	-7.553e-02	10	NC	1	NC	1
105		3	max	5.239	19	.254	19	5.935	16	7.553e-02	16	NC	1	NC	1
106			min	-5.382	13	-.269	13	-5.935	10	-7.553e-02	10	NC	1	NC	1
107		4	max	5.239	19	.157	19	5.924	16	7.553e-02	16	NC	1	NC	1
108			min	-5.382	13	-.169	13	-5.924	10	-7.553e-02	10	NC	1	NC	1
109		5	max	5.239	19	.059	19	5.914	16	7.553e-02	16	NC	1	NC	1
110			min	-5.382	13	-.069	13	-5.914	10	-7.553e-02	10	NC	1	NC	1
111	M12	1	max	2.292	19	.446	19	2.72	16	6.668e-02	16	NC	1	NC	1
112			min	-2.358	13	-.466	13	-2.72	10	-6.668e-02	10	NC	1	NC	1
113		2	max	2.292	19	.35	19	2.71	16	6.668e-02	16	NC	1	NC	1
114			min	-2.358	13	-.367	13	-2.71	10	-6.668e-02	10	NC	1	NC	1
115		3	max	2.292	19	.254	19	2.701	16	6.668e-02	16	NC	1	NC	1
116			min	-2.358	13	-.269	13	-2.701	10	-6.668e-02	10	NC	1	NC	1
117		4	max	2.292	19	.158	19	2.691	16	6.668e-02	16	NC	1	NC	1
118			min	-2.358	13	-.17	13	-2.691	10	-6.668e-02	10	NC	1	NC	1
119		5	max	2.292	19	.062	19	2.681	16	6.668e-02	16	NC	1	NC	1
120			min	-2.358	13	-.072	13	-2.681	10	-6.668e-02	10	NC	1	NC	1
121	M13	1	max	0	19	.062	19	.022	16	2.042e-02	16	6742.067	43	NC	1
122			min	0	13	-.07	13	-.022	10	-2.042e-02	10	150.678	13	475.709	10
123		2	max	0	19	.042	19	.014	16	2.042e-02	16	7395.921	43	NC	1
124			min	0	13	-.048	13	-.014	10	-2.042e-02	10	217.773	13	731.912	10
125		3	max	0	19	.026	19	.007	16	2.042e-02	16	9844.779	43	NC	1
126			min	0	13	-.03	13	-.007	10	-2.042e-02	10	347.498	13	1402.472	10
127		4	max	0	19	.012	19	.002	16	2.042e-02	16	NC	22	NC	1
128			min	0	13	-.015	13	-.002	10	-2.042e-02	10	722.65	13	4372.123	10
129		5	max	0	1	0	1	0	1	2.042e-02	16	NC	1	NC	1
130			min	0	1	0	1	0	1	-2.042e-02	10	NC	1	NC	1
131	M14	1	max	0	13	.058	19	.008	10	9.052e-03	10	6855.693	43	NC	1
132			min	0	19	-.066	13	-.008	16	-9.052e-03	16	159.762	13	1311.915	10
133		2	max	0	13	.048	19	.006	10	9.052e-03	10	8708.606	43	NC	1
134			min	0	19	-.054	13	-.006	16	-9.052e-03	16	195.381	13	1887.678	10
135		3	max	0	13	.034	19	.003	10	9.052e-03	10	NC	43	NC	1
136			min	0	19	-.038	13	-.003	16	-9.052e-03	16	276.706	13	3407.82	10
137		4	max	0	13	.017	19	.001	10	9.052e-03	10	NC	22	NC	1
138			min	0	19	-.02	13	-.001	16	-9.052e-03	16	535.468	13	9897.09	10
139		5	max	0	1	0	1	0	1	9.052e-03	10	NC	1	NC	1
140			min	0	1	0	1	0	1	-9.052e-03	16	NC	1	NC	1
141	M15	1	max	.067	13	6.549	10	5.797	19	6.969e-03	10	NC	1	NC	1
142			min	-.058	19	-6.549	16	-5.945	13	-6.969e-03	16	NC	1	NC	1
143		2	max	.069	13	3.336	10	2.921	19	6.532e-03	10	NC	1	NC	32
144			min	-.061	19	-3.336	16	-2.998	13	-6.532e-03	16	108.997	10	121.703	13
145		3	max	.07	13	.743	10	.517	19	4.16e-03	10	NC	1	NC	33
146			min	-.062	19	-.743	16	-.534	13	-4.16e-03	16	67.456	10	73.067	13

Envelope Member Section Deflections Strength (Continued)

	Member	Sec		x [in]	LC	y [in]	LC	z [in]	LC	x Rotate ...	LC	(n) L/y R...	LC	(n) L/z R...	LC
147		4	max	.068	13	.172	16	.042	13	1.145e-03	10	NC	1	NC	32
148			min	-.06	19	-.172	10	-.041	19	-1.145e-03	16	91.404	10	118.626	13
149		5	max	.066	13	.155	10	.059	13	7.e-04	16	NC	1	NC	1
150			min	-.058	19	-.155	16	-.051	19	-7.e-04	10	NC	1	NC	1
151	G3	1	max	.466	13	8.496	10	7.484	19	6.969e-03	10	NC	1	NC	1
152			min	-.448	19	-8.496	16	-7.672	13	-6.969e-03	16	NC	1	NC	1
153		2	max	.466	13	6.835	10	6.015	19	6.969e-03	10	NC	1	NC	1
154			min	-.448	19	-6.835	16	-6.169	13	-6.969e-03	16	748.727	10	1170.921	13
155		3	max	.465	13	5.243	10	4.624	19	6.856e-03	10	NC	1	NC	1
156			min	-.447	19	-5.243	16	-4.743	13	-6.856e-03	16	540.253	10	1281.38	13
157		4	max	.463	13	3.723	10	3.246	19	6.594e-03	10	NC	1	NC	1
158			min	-.445	19	-3.723	16	-3.331	13	-6.594e-03	16	666.022	10	1807.863	13
159		5	max	.462	13	2.3	10	1.895	19	6.407e-03	10	NC	1	NC	1
160			min	-.444	19	-2.3	16	-1.946	13	-6.407e-03	16	NC	1	NC	1
161	M17	1	max	5.212	19	.448	19	5.915	16	7.512e-02	16	NC	1	NC	1
162			min	-5.346	13	-.466	13	-5.915	10	-7.512e-02	10	NC	1	NC	1
163		2	max	5.212	19	.351	19	5.904	16	7.512e-02	16	NC	1	NC	1
164			min	-5.346	13	-.366	13	-5.904	10	-7.512e-02	10	NC	1	NC	1
165		3	max	5.212	19	.253	19	5.894	16	7.512e-02	16	NC	1	NC	1
166			min	-5.346	13	-.266	13	-5.894	10	-7.512e-02	10	NC	1	NC	1
167		4	max	5.212	19	.156	19	5.883	16	7.512e-02	16	NC	1	NC	1
168			min	-5.346	13	-.167	13	-5.883	10	-7.512e-02	10	NC	1	NC	1
169		5	max	5.212	19	.058	19	5.873	16	7.512e-02	16	NC	1	NC	1
170			min	-5.346	13	-.067	13	-5.873	10	-7.512e-02	10	NC	1	NC	1
171	M18	1	max	2.277	19	.444	19	2.697	16	6.627e-02	16	NC	1	NC	1
172			min	-2.338	13	-.462	13	-2.697	10	-6.627e-02	10	NC	1	NC	1
173		2	max	2.277	19	.348	19	2.688	16	6.627e-02	16	NC	1	NC	1
174			min	-2.338	13	-.364	13	-2.688	10	-6.627e-02	10	NC	1	NC	1
175		3	max	2.277	19	.253	19	2.678	16	6.627e-02	16	NC	1	NC	1
176			min	-2.338	13	-.266	13	-2.678	10	-6.627e-02	10	NC	1	NC	1
177		4	max	2.277	19	.157	19	2.668	16	6.627e-02	16	NC	1	NC	1
178			min	-2.338	13	-.168	13	-2.668	10	-6.627e-02	10	NC	1	NC	1
179		5	max	2.277	19	.062	19	2.659	16	6.627e-02	16	NC	1	NC	1
180			min	-2.338	13	-.07	13	-2.659	10	-6.627e-02	10	NC	1	NC	1

Envelope AISC 14th(360-10): LRFD Steel Code Checks

	Member	Shape	Code Check	Loc[in]	LC	Shear Check	Loc[in]	Dir	LC	phi*Pnc [k]	phi*P...	phi*...	phi*...	...	Eqn
1	M1	HSS3x3x3	.507	0	16	.162	10.5	z	13	77.801	78.246	6.796	6.796	...	H1-...
2	M2	HSS3x3x3	.464	0	10	.162	10.5	y	10	77.801	78.246	6.796	6.796	...	H1-...
3	M3	PIPE_3.0	1.452	110	13	.184	110		13	20.785	65.205	5.749	5.749	...	H1-...
4	G1	PIPE_2.5	.290	32.375	13	.029	5.25		13	33.962	50.715	3.596	3.596	...	H1-...
5	M7	HSS3x3x3	.544	0	7	.190	10.5	y	7	77.801	78.246	6.796	6.796	...	H1-...
6	M8	HSS3x3x3	.542	0	13	.192	10.5	y	13	77.801	78.246	6.796	6.796	...	H1-...
7	M9	PIPE_3.0	1.536	110	13	.166	110		10	20.785	65.205	5.749	5.749	1	H1-...
8	G2	PIPE_2.5	.290	32.375	13	.029	5.25		13	33.962	50.715	3.596	3.596	1	H1-...
9	M13	HSS3x3x3	.530	0	7	.185	10.5	y	7	77.801	78.246	6.796	6.796	...	H1-...
10	M14	HSS3x3x3	.529	0	13	.187	10.5	y	13	77.801	78.246	6.796	6.796	...	H1-...
11	M15	PIPE_3.0	1.511	110	13	.163	110		10	20.785	65.205	5.749	5.749	1	H1-...
12	G3	PIPE_2.5	.290	32.375	13	.029	5.25		13	33.962	50.715	3.596	3.596	1	H1-...

USA ENGINEERING

2818 Cypress Ridge Blvd., Suite 110
Wesley Chapel, FL 33544
(813) 994-0365
www.usa-engineering.com

Modified Mount

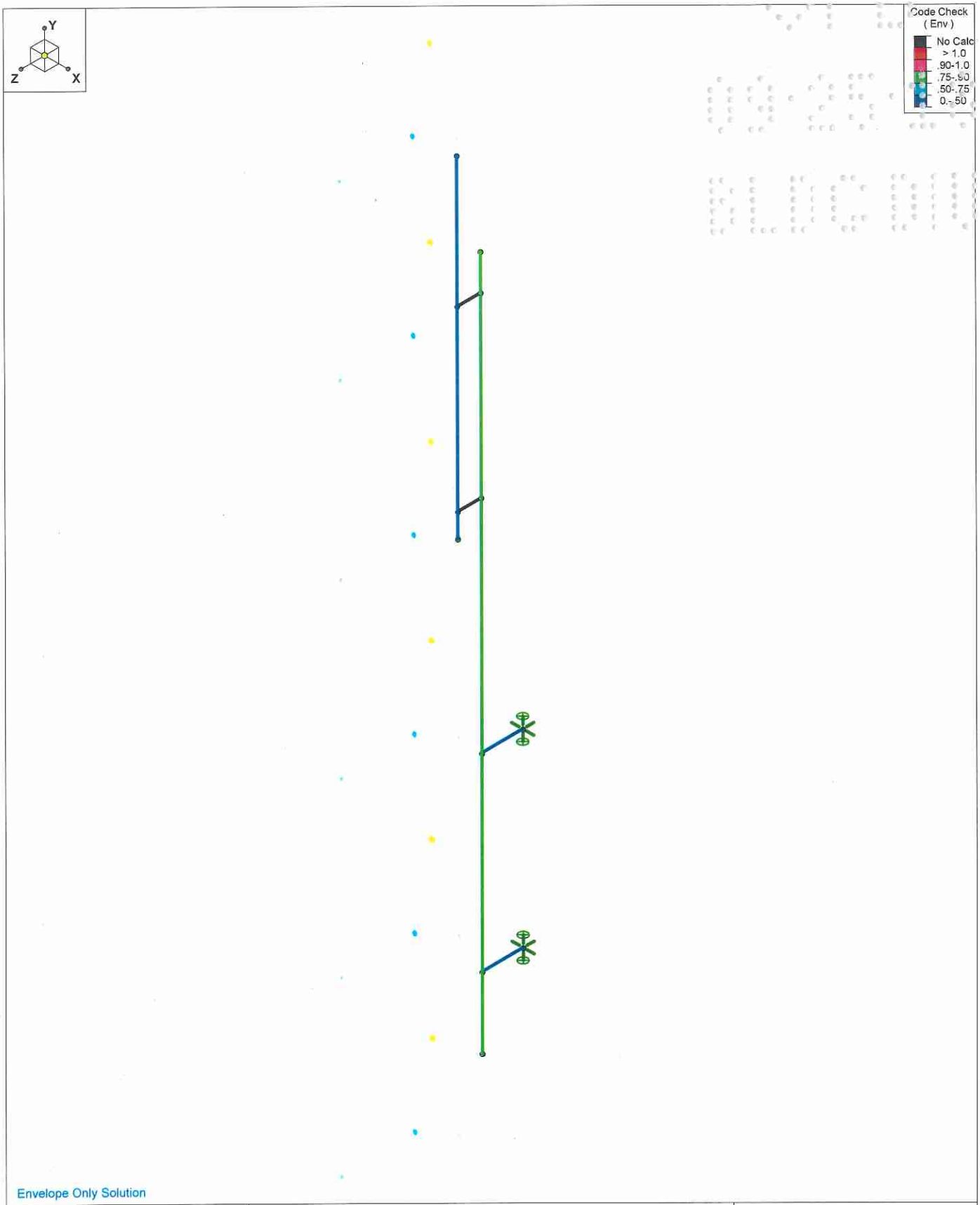

Envelope Only Solution

USA Engineering, Inc.	Mount Modified	SK - 1
Nicole Hoffman, EI		May 2, 2018 at 4:05 PM
M112_10069958		Mount Modified.r3d

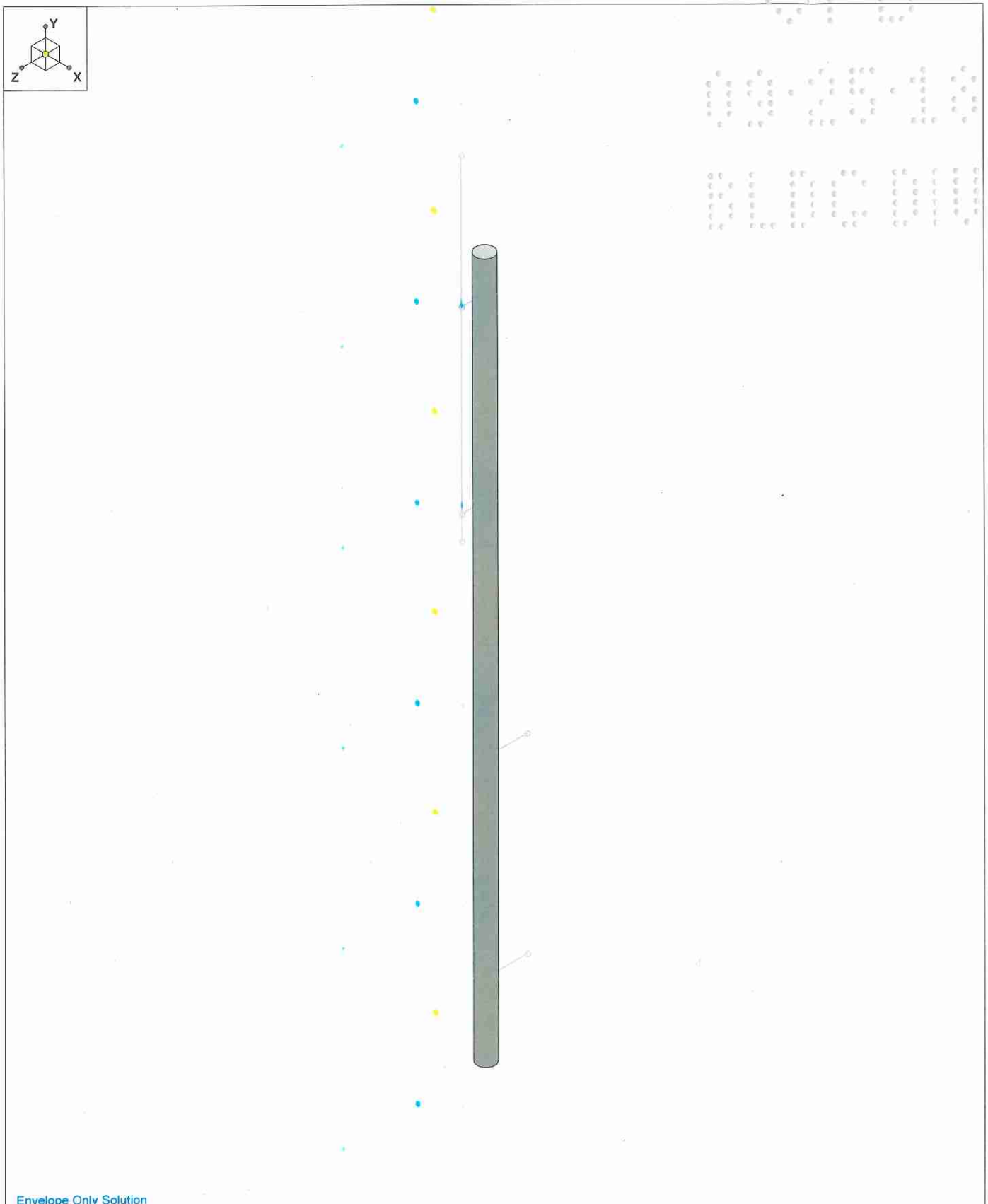

Envelope Only Solution

USA Engineering, Inc.	Mount Modified	SK - 2
Nicole Hoffman, EI		May 2, 2018 at 4:05 PM
M112_10069958		Mount Modified.r3d

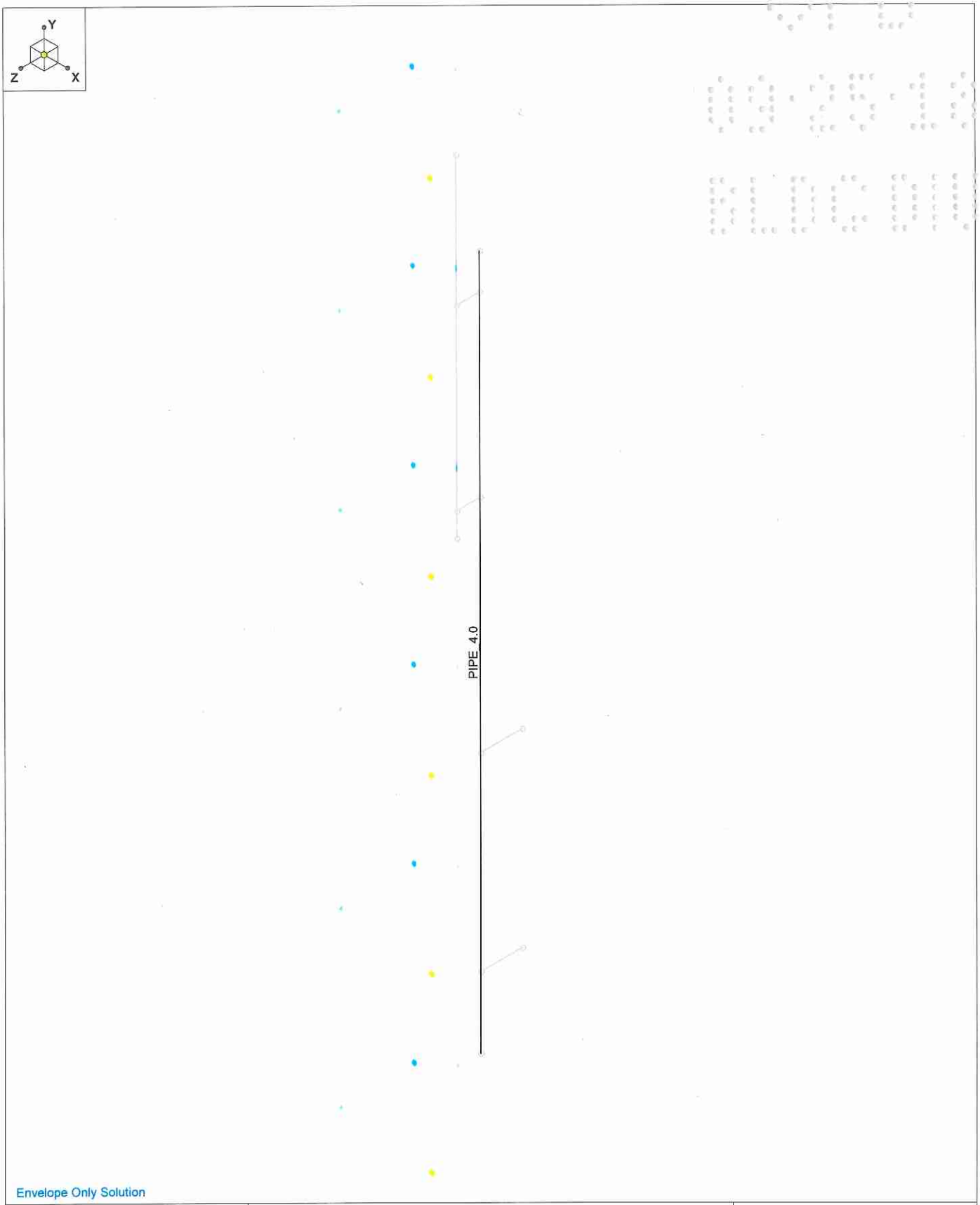

Envelope Only Solution

USA Engineering, Inc.	Mount Modified	SK - 3
Nicole Hoffman, EI		May 2, 2018 at 4:05 PM
M112_10069958		Mount Modified.r3d

Member Length (in) Displayed
Envelope Only Solution

USA Engineering, Inc.	Mount Modified	SK - 4
Nicole Hoffman, EI		May 2, 2018 at 4:05 PM
M112_10069958		Mount Modified.r3d

(Global) Model Settings

Display Sections for Member Calcs	5
Max Internal Sections for Member Calcs	97
Include Shear Deformation?	Yes
Increase Nailing Capacity for Wind?	Yes
Include Warping?	Yes
Trans Load Btwn Intersecting Wood Wall?	Yes
Area Load Mesh (in^2)	144
Merge Tolerance (in)	.12
P-Delta Analysis Tolerance	0.50%
Include P-Delta for Walls?	Yes
Automatically Iterate Stiffness for Walls?	Yes
Max Iterations for Wall Stiffness	3
Gravity Acceleration (in/sec^2)	386.4
Wall Mesh Size (in)	12
Eigensolution Convergence Tol. (1.E-)	4
Vertical Axis	Y
Global Member Orientation Plane	XZ
Static Solver	Sparse Accelerated
Dynamic Solver	Accelerated Solver

Hot Rolled Steel Code	AISC 14th(360-10): LRFD
Adjust Stiffness?	Yes(Iterative)
RISAConnection Code	AISC 14th(360-10): LRFD
Cold Formed Steel Code	AISI S100-16: LRFD
Wood Code	AF&PA NDS-05/08: ASD
Wood Temperature	< 100F
Concrete Code	ACI 318-11
Masonry Code	ACI 530-08: ASD
Aluminum Code	AA ADM1-05: ASD - Building
	AISC 14th(360-10): LRFD

Number of Shear Regions	4
Region Spacing Increment (in)	4
Biaxial Column Method	Exact Integration
Parme Beta Factor (PCA)	.65
Concrete Stress Block	Rectangular
Use Cracked Sections?	Yes
Use Cracked Sections Slab?	Yes
Bad Framing Warnings?	No
Unused Force Warnings?	Yes
Min 1 Bar Diam. Spacing?	No
Concrete Rebar Set	REBAR_SET_ASTMA615
Min % Steel for Column	1
Max % Steel for Column	8

(Global) Model Settings, Continued

Seismic Code	ASCE 7-10
Seismic Base Elevation (in)	Not Entered
Add Base Weight?	Yes
Ct X	.02
Ct Z	.02
T X (sec)	Not Entered
T Z (sec)	Not Entered
R X	3
R Z	3
Ct Exp. X	.75
Ct Exp. Z	.75
SD1	1
SDS	1
S1	1
TL (sec)	5
Risk Cat	I or II
Drift Cat	Other
Om Z	1
Om X	1
Cd Z	1
Cd X	1
Rho Z	1
Rho X	1

Joint Coordinates and Temperatures

	Label	X [in]	Y [in]	Z [in]	Temp [F]	Detach From Diaphragm
1	N1	48	0	0	0	
2	N2	48	176	0	0	
3	N3	48	18	0	0	
4	N4	48	66	0	0	
5	N5	48	167	0	0	
6	N6	48	122	0	0	
7	N7	48	167	6	0	
8	N8	48	122	6	0	
9	N9	48	200	6	0	
10	N10	48	116	6	0	
11	N11	48	18	-10.5	0	
12	N12	48	66	-10.5	0	

Joint Boundary Conditions

	Joint Label	X [k/in]	Y [k/in]	Z [k/in]	X Rot.[k-ft/rad]	Y Rot.[k-ft/rad]	Z Rot.[k-ft/rad]
1	N11	Reaction	Reaction	Reaction		Reaction	
2	N12	Reaction	Reaction	Reaction		Reaction	

Hot Rolled Steel Properties

	Label	E [ksi]	G [ksi]	Nu	Therm (\1E5 F)	Density[k/ft^3]	Yield[ksi]	Ry	Fu[ksi]	Rt
1	A36 Gr.36	29000	11154	.3	.65	.49	36	1.5	58	1.2
2	A572 Gr.50	29000	11154	.3	.65	.49	50	1.1	65	1.1
3	A992	29000	11154	.3	.65	.49	50	1.1	65	1.1
4	A500 Gr.42	29000	11154	.3	.65	.49	42	1.4	58	1.3
5	A500 Gr.46	29000	11154	.3	.65	.49	46	1.4	58	1.3
6	A53 Gr.B	29000	11154	.3	.65	.49	35	1.6	60	1.2

Member Primary Data

	Label	I Joint	J Joint	K Joint	Rotate(d...	Section/Shape	Type	Design List	Material	Design Rules
1	M1	N4	N12			HSS3x3x3	Beam	SquareTube	A500 Gr.46	Typical
2	M2	N3	N11			HSS3x3x3	Beam	SquareTube	A500 Gr.46	Typical
3	M3	N2	N1			PIPE_4.0	Beam	Pipe	A53 Gr.B	Typical
4	M4	N9	N10			PIPE_2.5	Beam	Pipe	A53 Gr.B	Typical
5	M5	N7	N5			RIGID	None	None	RIGID	Typical
6	M6	N8	N6			RIGID	None	None	RIGID	Typical

Member Advanced Data

	Label	I Release	J Release	I Offset[in]	J Offset[in]	T/C Only	Physical	Analysis ...	Inactive	Seismic Design ...
1	M1						Yes			None
2	M2						Yes			None
3	M3						Yes			None
4	M4						Yes			None
5	M5						Yes			None
6	M6						Yes			None

Hot Rolled Steel Design Parameters

	Label	Shape	Length[in]	Lbyy[in]	Lbzz[in]	Lcomp top[in]	Lcomp bot[in]	L-torq...	Kyy	Kzz	Cb	Function
1	M1	HSS3x3x3	10.5			Lbyy						Lateral
2	M2	HSS3x3x3	10.5			Lbyy						Lateral
3	M3	PIPE_4.0	176			Lbyy						Lateral
4	M4	PIPE_2.5	84			Lbyy						Lateral

Basic Load Cases

	BLC Description	Category	...	Y Grav...	Z Grav...	Joint	Point	Distribut...	Area(Mem...	Surface(Plate/Wall)
1	DEAD LOAD	DL		-1			3			
2	LIVE LOAD (Lv)	LL								
3	WIND FRONT	WLZ					3	3		
4	WIND SIDE	WLX					3	3		
5	Wind Front @ 30 ...	WLZ					3	3		
6	Wind Side @ 30 ...	WLX					3	3		
7	UDL	LL								
8	LIVE LOAD (Lm)	LL								

Load Combinations

	Description	Sol...	PD...	SR...	B...	Fa...	B...	Fa...	B...	Fa...	B...	Fa...	B...	Fa...	B...	Fa...	B...	Fa...	B...	Fa...	B...	Fa...	B...	Fa...
1	DEAD LOAD	Yes	Y		1	1																		
2	1.4 DEAD LOAD	Yes	Y		1	1.4																		
3	Dead + Lv	Yes	Y		1	1	2	1																
4	1.2 DEAD LOAD + 1.5 Lv	Yes	Y		1	1.2	2	1.5																
5	DEAD LOAD + UDL	Yes	Y		1	1											7	1						
6	1.2 DEAD LOAD + 1.5 UDL	Yes	Y		1	1.2											7	1.5						
7	1.2 DEAD LOAD + 1.6 WIND 0	Yes	Y		1	1.2			3	1.6														
8	1.2 DEAD LOAD + 1.6 WIND 30	Yes	Y		1	1.2			3	1.39	4	.8												
9	1.2 DEAD LOAD + 1.6 WIND 60	Yes	Y		1	1.2			3	.8	4	1.39												
10	1.2 DEAD LOAD + 1.6 WIND 90	Yes	Y		1	1.2					4	1.6												
11	1.2 DEAD LOAD + 1.6 WIND 120	Yes	Y		1	1.2			3	-.8	4	1.39												
12	1.2 DEAD LOAD + 1.6 WIND 150	Yes	Y		1	1.2			3	-1....	4	.8												
13	1.2 DEAD LOAD + 1.6 WIND 180	Yes	Y		1	1.2			3	-1.6														
14	1.2 DEAD LOAD + 1.6 WIND 210	Yes	Y		1	1.2			3	-1....	4	-.8												

Load Combinations (Continued)

	Description	Sol...	PD...	SR...	B...	Fa...	B...	Fa...	B...	Fa...	B...	Fa...	B...	Fa...	B...	Fa...	B...	Fa...	B...	Fa...	B...	Fa...	B...	Fa...
15	1.2 DEAD LOAD + 1.6 WIND 240	Yes	Y		1	1.2			3	-.8	4	-1....												
16	1.2 DEAD LOAD + 1.6 WIND 270	Yes	Y		1	1.2					4	-1.6												
17	1.2 DEAD LOAD + 1.6 WIND 300	Yes	Y		1	1.2			3	.8	4	-1....												
18	1.2 DEAD LOAD + 1.6 WIND 330	Yes	Y		1	1.2			3	1.39	4	-.8												
19	0.9 DEAD LOAD + 1.6 WIND 0	Yes	Y		1	.9			3	1.6														
20	0.9 DEAD LOAD + 1.6 WIND 30	Yes	Y		1	.9			3	1.39	4	.8												
21	0.9 DEAD LOAD + 1.6 WIND 60	Yes	Y		1	.9			3	.8	4	1.39												
22	0.9 DEAD LOAD + 1.6 WIND 90	Yes	Y		1	.9					4	1.6												
23	0.9 DEAD LOAD + 1.6 WIND 120	Yes	Y		1	.9			3	-.8	4	1.39												
24	0.9 DEAD LOAD + 1.6 WIND 150	Yes	Y		1	.9			3	-1....	4	.8												
25	0.9 DEAD LOAD + 1.6 WIND 180	Yes	Y		1	.9			3	-1.6														
26	0.9 DEAD LOAD + 1.6 WIND 210	Yes	Y		1	.9			3	-1....	4	-.8												
27	0.9 DEAD LOAD + 1.6 WIND 240	Yes	Y		1	.9			3	-.8	4	-1....												
28	0.9 DEAD LOAD + 1.6 WIND 270	Yes	Y		1	.9					4	-1.6												
29	0.9 DEAD LOAD + 1.6 WIND 300	Yes	Y		1	.9			3	.8	4	-1....												
30	0.9 DEAD LOAD + 1.6 WIND 330	Yes	Y		1	.9			3	1.39	4	-.8												
31	1.2 DEAD LOAD + 1.5 LIVE LOA...	Yes	Y		1	1.2							5	1					8	1.5				
32	1.2 DEAD LOAD + 1.5 LIVE LOA...	Yes	Y		1	1.2							5	.869	6	.5			8	1.5				
33	1.2 DEAD LOAD + 1.5 LIVE LOA...	Yes	Y		1	1.2							5	.5	6	.869			8	1.5				
34	1.2 DEAD LOAD + 1.5 LIVE LOA...	Yes	Y		1	1.2									6	1			8	1.5				
35	1.2 DEAD LOAD + 1.5 LIVE LOA...	Yes	Y		1	1.2							5	-.5	6	.869			8	1.5				
36	1.2 DEAD LOAD + 1.5 LIVE LOA...	Yes	Y		1	1.2							5	-.8...	6	.5			8	1.5				
37	1.2 DEAD LOAD + 1.5 LIVE LOA...	Yes	Y		1	1.2							5	-1					8	1.5				
38	1.2 DEAD LOAD + 1.5 LIVE LOA...	Yes	Y		1	1.2							5	-.8...	6	-.5			8	1.5				
39	1.2 DEAD LOAD + 1.5 LIVE LOA...	Yes	Y		1	1.2							5	-.5	6	-.8...			8	1.5				
40	1.2 DEAD LOAD + 1.5 LIVE LOA...	Yes	Y		1	1.2									6	-1			8	1.5				
41	1.2 DEAD LOAD + 1.5 LIVE LOA...	Yes	Y		1	1.2							5	.5	6	-.8...			8	1.5				
42	1.2 DEAD LOAD + 1.5 LIVE LOA...	Yes	Y		1	1.2							5	.869	6	-.5			8	1.5				
43	0.9 DEAD LOAD + 1.5 LIVE LOA...	Yes	Y		1	.9							5	1					8	1.5				
44	0.9 DEAD LOAD + 1.5 LIVE LOA...	Yes	Y		1	.9							5	.869	6	.5			8	1.5				
45	0.9 DEAD LOAD + 1.5 LIVE LOA...	Yes	Y		1	.9							5	.5	6	.869			8	1.5				
46	0.9 DEAD LOAD + 1.5 LIVE LOA...	Yes	Y		1	.9									6	1			8	1.5				
47	0.9 DEAD LOAD + 1.5 LIVE LOA...	Yes	Y		1	.9							5	-.5	6	.869			8	1.5				
48	0.9 DEAD LOAD + 1.5 LIVE LOA...	Yes	Y		1	.9							5	-.8...	6	.5			8	1.5				
49	0.9 DEAD LOAD + 1.5 LIVE LOA...	Yes	Y		1	.9							5	-1					8	1.5				
50	0.9 DEAD LOAD + 1.5 LIVE LOA...	Yes	Y		1	.9							5	-.8...	6	-.5			8	1.5				
51	0.9 DEAD LOAD + 1.5 LIVE LOA...	Yes	Y		1	.9							5	-.5	6	-.8...			8	1.5				
52	0.9 DEAD LOAD + 1.5 LIVE LOA...	Yes	Y		1	.9									6	-1			8	1.5				
53	0.9 DEAD LOAD + 1.5 LIVE LOA...	Yes	Y		1	.9							5	.5	6	-.8...			8	1.5				
54	0.9 DEAD LOAD + 1.5 LIVE LOA...	Yes	Y		1	.9							5	.869	6	-.5			8	1.5				

Joint Loads and Enforced Displacements

Joint Label	L,D,M	Direction	Magnitude[(k,k-ft), (in,rad), (k*s^2/in, k*s...
No Data to Print ...			

Member Point Loads (BLC 1 : DEAD LOAD)

	Member Label	Direction	Magnitude[k,k-ft]	Location[in,%]
1	M4	Y	-.05	%5
2	M4	Y	-.05	%95
3	M3	Y	-.12	%55

Member Point Loads (BLC 3 : WIND FRONT)

Member Label	Direction	Magnitude[k,k-ft]	Location[in,%]

Member Point Loads (BLC 3 : WIND FRONT) (Continued)

	Member Label	Direction	Magnitude[k,k-ft]	Location[in,%]
1	M4	Z	-.274	%5
2	M4	Z	-.274	%95
3	M3	Z	-.102	%55

Member Point Loads (BLC 4 : WIND SIDE)

	Member Label	Direction	Magnitude[k,k-ft]	Location[in,%]
1	M4	X	-.218	%5
2	M4	X	-.218	%95
3	M3	X	-.127	%55

Member Point Loads (BLC 5 : Wind Front @ 30 mph)

	Member Label	Direction	Magnitude[k,k-ft]	Location[in,%]
1	M4	Z	-.013	%5
2	M4	Z	-.013	%95
3	M3	Z	-.005	%55

Member Point Loads (BLC 6 : Wind Side @ 30 mph)

	Member Label	Direction	Magnitude[k,k-ft]	Location[in,%]
1	M4	X	-.011	%5
2	M4	X	-.011	%95
3	M3	X	-.006	%55

Member Distributed Loads (BLC 3 : WIND FRONT)

	Member Label	Direction	Start Magnitude[k/ft,F,ksf]	End Magnitude[k/ft,F,ksf]	Start Loca...	End Location[in,...
1	M1	PZ	-.025	-.025	0	0
2	M2	PZ	-.025	-.025	0	0
3	M3	PZ	-.023	-.023	0	0

Member Distributed Loads (BLC 4 : WIND SIDE)

	Member Label	Direction	Start Magnitude[k/ft,F,ksf]	End Magnitude[k/ft,F,ksf]	Start Loca...	End Location[in,...
1	M1	PX	-.025	-.025	0	0
2	M2	PX	-.025	-.025	0	0
3	M3	PX	-.023	-.023	0	0

Member Distributed Loads (BLC 5 : Wind Front @ 30 mph)

	Member Label	Direction	Start Magnitude[k/ft,F,ksf]	End Magnitude[k/ft,F,ksf]	Start Loca...	End Location[in,...
1	M1	PZ	-.001	-.001	0	0
2	M2	PZ	-.001	-.001	0	0
3	M3	PZ	-.001	-.001	0	0

Member Distributed Loads (BLC 6 : Wind Side @ 30 mph)

	Member Label	Direction	Start Magnitude[k/ft,F,ksf]	End Magnitude[k/ft,F,ksf]	Start Loca...	End Location[in,...
1	M1	PX	-.001	-.001	0	0
2	M2	PX	-.001	-.001	0	0
3	M3	PX	-.001	-.001	0	0

Member Area Loads

Joint A	Joint B	Joint C	Joint D	Direction	Distribution	Magnitude[ksf]
No Data to Print ...						

Envelope Joint Reactions

	Joint		X [k]	LC	Y [k]	LC	Z [k]	LC	MX [k-ft]	LC	MY [k-ft]	LC	MZ [k-ft]	LC
1	N11	max	1.618	16	3.5	13	2.106	13	0	1	.779	16	0	1
2		min	-1.618	10	-3.032	19	-1.886	19	0	1	-.779	10	0	1
3	N12	max	3.128	10	3.467	7	3.464	19	0	1	2.419	10	0	1
4		min	-3.128	16	-3.051	25	-3.684	13	0	1	-2.419	16	0	1
5	Totals:	max	1.511	22	.584	2	1.578	7						
6		min	-1.511	28	.376	25	-1.578	25						

Envelope Member Section Deflections Strength

	Member	Sec		x [in]	LC	y [in]	LC	z [in]	LC	x Rotate ...	LC	(n) L/y R...	LC	(n) L/z R...	LC
1	M1	1	max	0	19	.027	19	.021	16	9.277e-03	16	5503.545	43	NC	1
2			min	0	13	-.033	13	-.021	10	-9.277e-03	10	316.006	13	505.539	10
3		2	max	0	19	.016	19	.014	16	9.277e-03	16	6094.431	43	NC	1
4			min	0	13	-.022	13	-.014	10	-9.277e-03	10	486.611	13	762.073	10
5		3	max	0	19	.009	19	.007	16	9.277e-03	16	8152.933	43	NC	1
6			min	0	13	-.013	13	-.007	10	-9.277e-03	10	820.71	13	1432.621	10
7		4	max	0	19	.004	19	.002	16	9.277e-03	16	NC	1	NC	1
8			min	0	13	-.006	13	-.002	10	-9.277e-03	10	1773.775	13	4361.53	10
9		5	max	0	1	0	1	0	1	9.277e-03	16	NC	1	NC	1
10			min	0	1	0	1	0	1	-9.277e-03	10	NC	1	NC	1
11	M2	1	max	0	13	.025	19	.005	10	3.666e-03	10	5656.708	43	NC	1
12			min	0	19	-.031	13	-.005	16	-3.666e-03	16	340.745	13	1997.84	10
13		2	max	0	13	.022	19	.004	10	3.666e-03	10	6939.415	43	NC	1
14			min	0	19	-.027	13	-.004	16	-3.666e-03	16	388.913	13	2588.604	10
15		3	max	0	13	.016	19	.002	10	3.666e-03	10	9844.631	43	NC	1
16			min	0	19	-.02	13	-.002	16	-3.666e-03	16	528.962	13	4313.027	10
17		4	max	0	13	.009	19	0	10	3.666e-03	10	NC	1	NC	1
18			min	0	19	-.01	13	0	16	-3.666e-03	16	1001.85	13	NC	1
19		5	max	0	1	0	1	0	1	3.666e-03	10	NC	1	NC	1
20			min	0	1	0	1	0	1	-3.666e-03	16	NC	1	NC	1
21	M3	1	max	.031	13	2.927	10	2.659	19	4.26e-03	10	NC	1	NC	1
22			min	-.024	19	-2.927	16	-2.741	13	-4.26e-03	16	NC	1	NC	1
23		2	max	.033	13	1.489	10	1.347	19	3.96e-03	10	NC	1	NC	1
24			min	-.026	19	-1.489	16	-1.39	13	-3.96e-03	16	243.835	10	264.984	13
25		3	max	.033	13	.344	10	.253	19	2.937e-03	10	NC	1	NC	1
26			min	-.027	19	-.344	16	-.263	13	-2.937e-03	16	153.012	10	159.394	13
27		4	max	.032	13	.07	16	.032	13	1.195e-03	10	NC	1	NC	1
28			min	-.026	19	-.07	10	-.032	19	-1.195e-03	16	207.598	10	246.831	13
29		5	max	.031	13	.061	10	.006	13	1.459e-04	16	NC	1	NC	1
30			min	-.025	19	-.061	16	-.002	19	-1.459e-04	10	NC	1	NC	1
31	M4	1	max	.215	13	3.866	10	3.5	19	4.26e-03	10	NC	1	NC	1
32			min	-.203	19	-3.866	16	-3.603	13	-4.26e-03	16	NC	1	NC	1
33		2	max	.215	13	3.073	10	2.772	19	4.26e-03	10	NC	1	NC	1
34			min	-.203	19	-3.073	16	-2.856	13	-4.26e-03	16	980.163	10	1132.591	13
35		3	max	.214	13	2.347	10	2.123	19	4.183e-03	10	NC	1	NC	1
36			min	-.202	19	-2.347	16	-2.189	13	-4.183e-03	16	798.841	10	1212.587	13
37		4	max	.212	13	1.667	10	1.495	19	4.003e-03	10	NC	1	NC	1
38			min	-.2	19	-1.667	16	-1.542	13	-4.003e-03	16	1072.708	10	1919.18	13
39		5	max	.211	13	1.039	10	.884	19	3.875e-03	10	NC	1	NC	1
40			min	-.199	19	-1.039	16	-.913	13	-3.875e-03	16	NC	1	NC	1
41	M5	1	max	2.392	19	.203	19	2.649	16	3.377e-02	16	NC	1	NC	1
42			min	-2.465	13	-.215	13	-2.649	10	-3.377e-02	10	NC	1	NC	1
43		2	max	2.392	19	.158	19	2.643	16	3.377e-02	16	NC	1	NC	1
44			min	-2.465	13	-.169	13	-2.643	10	-3.377e-02	10	NC	1	NC	1
45		3	max	2.392	19	.113	19	2.636	16	3.377e-02	16	NC	1	NC	1

Envelope Member Section Deflections Strength (Continued)

	Member	Sec		x [in]	LC	y [in]	LC	z [in]	LC	x Rotate ...	LC	(n) L/y R...	LC	(n) L/z R...	LC
46			min	-2.465	13	-.123	13	-2.636	10	-3.377e-02	10	NC	1	NC	1
47		4	max	2.392	19	.069	19	2.63	16	3.377e-02	16	NC	1	NC	1
48			min	-2.465	13	-.077	13	-2.63	10	-3.377e-02	10	NC	1	NC	1
49		5	max	2.392	19	.024	19	2.624	16	3.377e-02	16	NC	1	NC	1
50			min	-2.465	13	-.031	13	-2.624	10	-3.377e-02	10	NC	1	NC	1
51	M6	1	max	1.056	19	.199	19	1.213	16	2.912e-02	16	NC	1	NC	1
52			min	-1.09	13	-.211	13	-1.213	10	-2.912e-02	10	NC	1	NC	1
53		2	max	1.056	19	.156	19	1.208	16	2.912e-02	16	NC	1	NC	1
54			min	-1.09	13	-.166	13	-1.208	10	-2.912e-02	10	NC	1	NC	1
55		3	max	1.056	19	.113	19	1.202	16	2.912e-02	16	NC	1	NC	1
56			min	-1.09	13	-.122	13	-1.202	10	-2.912e-02	10	NC	1	NC	1
57		4	max	1.056	19	.07	19	1.196	16	2.912e-02	16	NC	1	NC	1
58			min	-1.09	13	-.078	13	-1.196	10	-2.912e-02	10	NC	1	NC	1
59		5	max	1.056	19	.027	19	1.19	16	2.912e-02	16	NC	1	NC	1
60			min	-1.09	13	-.033	13	-1.19	10	-2.912e-02	10	NC	1	NC	1

Envelope AISC 14th(360-10): LRFD Steel Code Checks

	Member	Shape	Code Check	Loc[in]	LC	Shear Check	Loc[in]	Dir	LC	phi*Pnc [k]	phi*P...	phi*...	phi*...	...	Eqn
1	M1	HSS3x3x3	.467	0	7	.161	10.5	y	7	77.801	78.246	6.796	6.796	...	H1-...
2	M2	HSS3x3x3	.465	0	13	.164	10.5	y	13	77.801	78.246	6.796	6.796	...	H1-...
3	M3	PIPE_4.0	.841	110	13	.135	110		10	46.856	93.24	10.631	10.631	1	H1-...
4	M4	PIPE_2.5	.288	32.375	13	.029	5.25		13	33.962	50.715	3.596	3.596	1	H1-...

M112
FA #10069958

14707 SOUTH DIXIE HIGHWAY
PALMETTO BAY, FL 33176

TENANT IMPROVEMENT 6C (FIRSTNET)/ BWE/ 4T4R

REV	DATE	DESCRIPTION
A	5/17/18	PRELIMINARY CDs REV "A"
0	8/3/18	REV 0 CDs ISSUED

USA ENG PROJECT NO.: 01818000-44

DRAWN BY:	CHECKED BY:
ML	MM

LOCATION MAP

VICINITY MAP

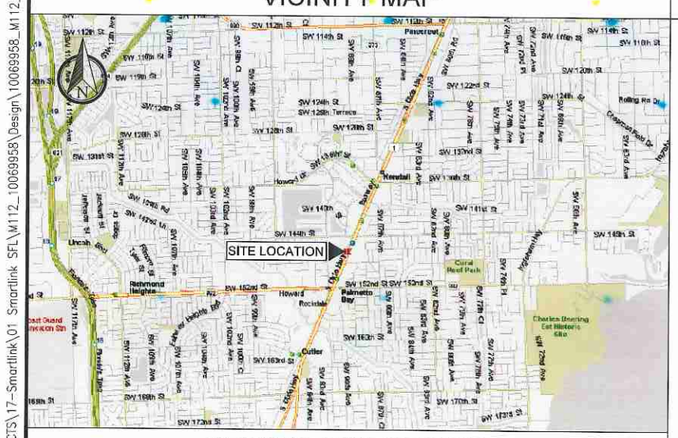

DRIVING DIRECTIONS

DEPART AT&T OFFICE...8601 W Sunrise Blvd, Fort Lauderdale, FL 33322

1. Depart SR-838 W / W Sunrise Blvd toward N Pine Island Rd 4.8 mi
2. Take ramp left for SR-869 S / Sawgrass Expy S toward Miami 2.7 mi
3. Keep straight onto I-75 S 11.5 mi
4. At exit 5, take ramp right for Fl's Turnpike South toward Homestead Toll road 22.9 mi
5. At exit 16, take ramp right toward SW 152nd St 0.5 mi
6. Keep straight onto Florida's Tpke S 0.2 mi
7. Turn left onto SR-992 E / SW 152nd St / Coral Reef Dr 2.4 mi
8. Turn left onto US-1 N / S Dixie Hwy Mobil/7-Eleven on the corner 0.3 mi

Arrive at 14707 S Dixie Hwy, Palmetto Bay, FL 33176

APPROVALS

PROPERTY OWNER	DATE
RF ENGINEER	DATE
CONSTRUCTION	DATE
SITE ACQUISITION	DATE
ZONING	DATE
NETWORK	DATE
OPERATIONS	DATE
CONTRACTOR	DATE

PROJECT SUMMARY

SITE NAME:	M112
FA SITE NUMBER:	10069958
PARCEL:	33-5021-000-0351
COUNTY:	MIAMI-DADE
JURISDICTION:	VILLAGE OF PALMETTO BAY
SITE COORDINATES:	25.6333000° N 80.3384000° W
PROJECT INITIATIVE:	6C (FN)/BWE /4T4R
STRUCTURE TYPE:	ROOFTOP
TOWER HEIGHT:	46'-0" AGL
ANTENNA C.L. HEIGHT:	56'-0"/57'-0" AGL

PROJECT REFERENCES

1. THESE PLANS WERE COMPLETED PER PRELIMINARY/APPROVED 1xBBUS RRH Add RFDS ID#: 2011192 V1.00 DATED 5/8/18. CONTRACTOR SHALL REQUEST CURRENT RFDS & WORKBOOK FROM CONSTRUCTION MANAGER PRIOR TO CONSTRUCTION.
2. THESE PLANS WERE COMPLETED PER USA ENGINEERING'S MOUNT ANALYSIS DATED 5/3/18.

DESIGN CRITERIA

- FLORIDA BUILDING CODE (6TH EDITION) 2017
  ANSI/EIA/TIA-222-G (ALLOWED PER EXEMPTION #5 OF 1609.1.1)
  ASCE 7-10
  VULT = 175 MPH (ULTIMATE 3 SECOND GUST)
  VASD = 136 MPH (NOMINAL 3 SECOND GUST)
  RISK CATEGORY = II
  EXPOSURE = C
  IMPORTANCE FACTOR= 1.0
- NATIONAL ELECTRICAL CODE, 2014 EDITION (NFPA 70 2014)
- FLORIDA FIRE PREVENTION CODE (6TH EDITION)
- CONTRACTOR TO CONFIRM THAT THE SITE IS COMPLIANT WITH RF WARNING SIGNAGE & EMERGENCY SIGNAGE AS REQUIRED BY THE FEDERAL GUIDELINES CONTAINED WITH OET 65 BULLETIN & AS PER AT&T GUIDELINES

CONSTRUCTION NOTES

1. CONTRACTOR SHALL VERIFY ALL PLANS AND EXISTING DIMENSIONS AND CONDITIONS ON THE JOB SITE AND SHALL IMMEDIATELY NOTIFY THE ENGINEER IN WRITING OF ANY DISCREPANCIES BEFORE PROCEEDING WITH THE WORK OR BE RESPONSIBLE FOR SAME.
2. CONTRACTOR SHALL NOTIFY OWNER FOR ACCESS TO SITE.
3. THIS PROJECT CONSISTS OF THE INSTALLATION OF:
   (12) GROUND MOUNTED DIPLEXERS
   (3) GROUND MOUNTED B14-4478,
   (3) REPLACEMENT 4426-B66
   (3) REPLACEMENT 4415-B25, MOUNT MODIFICATIONS, AND ALL ASSOCIATED WORK.

CONTACTS

APPLICANT:
AT&T (SFL)
8601 W. SUNRISE BLVD
PLANTATION, FL 33322

TOWER OWNER:
JUSTO A ATRIO TRS
MARTHA S ATRIO TRS
335 MARQUESA DRIVE
CORAL GABLES, FL 33156

ENGINEER:
USA ENGINEERING
2818 CYPRESS RIDGE BLVD
SUITE 110
WESLEY CHAPEL, FL 33544
CONTACT: MARC P. MAIER, P.E.
PHONE: 813-994-0365

INDEX OF DRAWINGS

SHT. NO.	DESCRIPTION	REV. NO.
T-1	TITLE SHEET	
GN-1	GENERAL NOTES, ABBREVIATIONS	
ARCHITECTURAL / CIVIL PLANS		
C-1	SITE PLAN	
STRUCTURAL PLANS		
S-1	TOWER ELEVATION AND ANTENNA ORIENTATION	
S-2	MISCELLANEOUS DETAILS	
S-3	MISCELLANEOUS DETAILS	
ANTENNA		
AN-1	ANTENNA SCHEDULE	
AN-2	RISER DIAGRAMS	

PROJECT INFORMATION

1. THIS IS AN UNMANNED FACILITY AND WILL BE USED FOR THE TRANSMISSION OF RADIO SIGNALS FOR THE PURPOSE OF PROVIDING PUBLIC CELLULAR SERVICE.
2. AT&T CERTIFIES THAT THIS EQUIPMENT FACILITY WILL BE SERVICED ONLY BY AT&T EMPLOYEES AND SUBCONTRACTORS AND THE WORK ASSOCIATED WITH ANY EQUIPMENT CANNOT BE PERFORMED BY HANDICAPPED PERSONS. THIS FACILITY WILL BE FREQUENTED ONLY BY SERVICE PERSONNEL FOR REPAIR PURPOSES ONLY.
3. NO POTABLE WATER SUPPLY IS TO BE PROVIDED AT THIS LOCATION.
4. NO WASTEWATER WILL BE GENERATED AT THIS LOCATION.
5. NO SOLID WASTE WILL BE GENERATED AT THIS LOCATION.

at&t
8601 W SUNRISE BLVD
PLANTATION, FL 33322

smartlink
1997 ANNAPOLIS EXCHANGE PKWY.
SUITE 200
ANNAPOLIS, MD 21401

PREPARED BY:
USA ENGINEERING
2818 CYPRESS RIDGE BLVD.
SUITE 110
WESLEY CHAPEL, FL 33544
(813) 994-0365
FL COA #31705

MARC P. MAIER
LICENSE
No 72513
STATE OF FLORIDA
PROFESSIONAL ENGINEER

AUGUST 03, 2018

MARC P. MAIER, PE
FL PROFESSIONAL ENGINEER LIC. # 72513

M112
FA #10069958
14707 S. DIXIE HWY
PALMETTO BAY, FL 33176

SHEET DESCRIPTION
TITLE SHEET

SHEET NUMBER
T-1

USA ENGINEERING - T:\00-2018 PROJECTS\17-Smartlink\01 Smartlink SFL\M112_10069958\Design\10069958_M112_6C(FN)-BWE-4T4R CD.dwg August 3, 2018 2:32:05 PM joannot

GENERAL NOTES:

1. ALL REFERENCES TO OWNER HEREIN SHALL BE CONSTRUED TO MEAN **AT&T** OR IT'S DESIGNATED REPRESENTATIVE.
2. ALL WORK PRESENTED ON THESE DRAWINGS MUST BE COMPLETED BY THE CONTRACTOR UNLESS NOTED OTHERWISE. THE CONTRACTOR MUST HAVE CONSIDERABLE EXPERIENCE IN PERFORMANCE OF WORK SIMILAR TO THAT DESCRIBED HEREIN. BY ACCEPTANCE OF THIS ASSIGNMENT, THE CONTRACTOR IS ATTESTING THAT HE DOES HAVE SUFFICIENT EXPERIENCE AND ABILITY, THAT HE IS KNOWLEDGEABLE OF THE WORK TO BE PERFORMED AND THAT HE IS PROPERLY LICENSED AND PROPERLY REGISTERED TO DO THIS WORK IN THE STATE AND/OR COUNTY IN WHICH IT IS TO BE PERFORMED.
3. UNLESS SHOWN OR NOTED OTHERWISE ON THE CONTRACT DRAWINGS, OR IN THE SPECIFICATIONS, THE FOLLOWING NOTES SHALL APPLY TO THE MATERIALS LISTED HEREIN, AND TO THE PROCEDURES TO BE USED ON THIS PROJECT.
4. IT IS THE CONTRACTOR'S SOLE RESPONSIBILITY TO DETERMINE ERECTION PROCEDURE AND SEQUENCE TO INSURE THE SAFETY OF THE STRUCTURE AND ITS COMPONENT PARTS DURING ERECTION AND/OR FIELD MODIFICATIONS. THIS INCLUDES, BUT IS NOT LIMITED TO, THE ADDITION OF WHATEVER TEMPORARY BRACING, GUYS OR TIE DOWNS THAT MAY BE NECESSARY. SUCH MATERIAL SHALL BE REMOVED AND SHALL REMAIN THE PROPERTY OF THE CONTRACTOR AFTER THE COMPLETION OF THE PROJECT.
5. ALL DIMENSIONS, ELEVATIONS, AND EXISTING CONDITIONS SHOWN ON THE DRAWINGS SHALL BE FIELD VERIFIED BY THE CONTRACTOR AND THE TESTING AGENCY PRIOR TO BEGINNING ANY MATERIALS ORDERING, FABRICATION OR CONSTRUCTION WORK ON THIS PROJECT. ANY DISCREPANCIES SHALL BE IMMEDIATELY BROUGHT TO THE ATTENTION OF THE OWNER AND THE OWNER'S ENGINEER. THE DISCREPANCIES MUST BE RESOLVED BEFORE THE CONTRACTOR IS TO PROCEED WITH THE WORK. THE CONTRACT DOCUMENTS DO NOT INDICATE THE METHOD OF CONSTRUCTION. THE CONTRACTOR SHALL SUPERVISE AND DIRECT THE WORK AND SHALL BE SOLELY RESPONSIBLE FOR ALL CONSTRUCTION MEANS, METHODS, TECHNIQUES, SEQUENCES, AND PROCEDURES. OBSERVATION VISITS TO THE SITE BY THE OWNER AND/OR THE ENGINEER SHALL NOT INCLUDE INSPECTION OF THE PROTECTIVE MEASURES OR THE CONSTRUCTION PROCEDURES.
6. ALL MATERIALS AND EQUIPMENT FURNISHED SHALL BE NEW AND OF GOOD QUALITY, FREE FROM FAULTS AND DEFECTS AND IN CONFORMANCE WITH THE CONTRACT DOCUMENTS. ANY AND ALL SUBSTITUTIONS MUST BE PROPERLY APPROVED AND AUTHORIZED IN WRITING BY THE OWNER AND ENGINEER PRIOR TO INSTALLATION. THE CONTRACTOR SHALL FURNISH SATISFACTORY EVIDENCE AS TO THE KIND AND QUALITY OF THE MATERIALS AND EQUIPMENT BEING SUBSTITUTED.
7. THE CONTRACTOR SHALL BE RESPONSIBLE FOR INITIATING, MAINTAINING, AND SUPERVISING ALL SAFETY PRECAUTIONS AND PROGRAMS IN CONNECTION WITH THE WORK. THE CONTRACTOR IS RESPONSIBLE FOR INSURING THAT THIS PROJECT AND RELATED WORK COMPLIES WITH ALL APPLICABLE LOCAL, STATE, AND FEDERAL SAFETY CODES AND REGULATIONS GOVERNING THIS WORK.
8. ALL WORK SHALL BE COMPLETED IN ACCORDANCE WITH THE LATEST EDITION OF THE LOCAL BUILDING CODE.
9. ALL PROPOSED CELLULAR EQUIPMENT AND FIXTURES SHALL BE FURNISHED BY OWNER FOR INSTALLATION BY THE CONTRACTOR, UNLESS SPECIFICALLY NOTED OTHERWISE HEREIN.
10. ACCESS TO THE PROPOSED WORK SITE MAY BE RESTRICTED. THE CONTRACTOR SHALL COORDINATE INTENDED CONSTRUCTION ACTIVITY, INCLUDING WORK SCHEDULE AND MATERIALS ACCESS, WITH THE RESIDENT LEASING AGENT FOR APPROVAL.

STRUCTURAL STEEL NOTES:

1. STRUCTURAL STEEL SHALL CONFORM TO THE LATEST EDITION OF THE A.I.S.C. SPECIFICATIONS FOR STRUCTURAL STEEL BUILDINGS– ALLOWABLE STRESS DESIGN AND PLASTIC DESIGN INCLUDING THE COMMENTARY AND THE A.I.S.C. CODE OF STANDARD PRACTICE.
2. STRUCTURAL STEEL PLATES AND SHAPES SHALL CONFORM TO ASTM A36. ALL STRUCTURAL STEEL PIPES SHALL CONFORM TO ASTM A53 GRADE B. ALL STRUCTURAL STEEL TUBING SHALL CONFORM TO ASTM A500 GRADE B. ALL STRUCTURAL STEEL COMPONENTS AND FABRICATED ASSEMBLIES SHALL BE HOT DIP GALVANIZED AFTER FABRICATION.
3. WELDING SHALL BE IN ACCORDANCE WITH THE AMERICAN WELDING SOCIETY (AWS) D.1.1/D1.1M:2010. STRUCTURAL WELDING CODE–STEEL WELD ELECTRODES SHALL BE E70XX.
4. ALL COAXIAL CABLE CONNECTORS AND TRANSMITTER EQUIPMENT SHALL BE AS SPECIFIED BY THE OWNER AND IS NOT INCLUDED IN THESE CONSTRUCTION DOCUMENTS. THE CONTRACTOR SHALL FURNISH ALL CONNECTION HARDWARE REQUIRED TO SECURE THE CABLES. CONNECTION HARDWARE SHALL BE GRADE 304 STAINLESS STEEL.
5. ALL REINFORCING STEEL SHALL CONFORM TO ASTM 615 GRADE 60, DEFORMED BILLET STEEL BARS. WELDED WIRE FABRIC REINFORCING SHALL CONFORM TO ASTM A185.
6. THE FABRICATION AND ERECTION OF STRUCTURAL STEEL SHALL CONFORM TO THE LATEST A.I.S.C. SPECIFICATIONS.
7. ALL CONNECTIONS NOT FULLY DETAILED ON THESE PLANS SHALL BE DETAILED BY THE STEEL FABRICATOR IN ACCORDANCE WITH A.I.S.C. SPECIFICATIONS.
8. HOT–DIP GALVANIZE ITEMS SPECIFIED TO BE ZINC–COATED, AFTER FABRICATION WHERE PRACTICAL. GALVANIZING: ASTM A 123, ASTM, A 153/A 153M OR ASTM A 653/A 653M, G90, AS APPLICABLE.
9. REPAIR DAMAGED SURFACES WITH GALVANIZING REPAIR METHOD AND PAINT CONFORMING TO ASTM A 780 OR BY APPLICATION OF STICK OR THICK PASTE MATERIAL SPECIFICALLY DESIGNED FOR REPAIR OF GALVANIZING. CLEAN AREAS TO BE REPAIRED, AND REMOVE SLAG FROM WELDS. HEAT SURFACES TO WHICH STICK OR PASTE MATERIAL IS APPLIED WITH A TORCH TO A TEMPERATURE SUFFICIENT TO MELT THE METALLICS. IN STICK OR PASTE, SPREAD MOLTEN MATERIAL UNIFORMLY OVER SURFACES TO BE COATED AND WIPE OFF EXCESS MATERIAL.
10. CONTRACTOR SHALL FOLLOW THE MANUFACTURER'S INSTRUCTIONS/SPECIFICATIONS IF NO INFORMATION IS CONTAINED IN THESE PLANS OR IF THE MANUFACTURER'S SPECIFICATIONS ARE STRICTER.

PERMITS:

1. CONTRACTOR SHALL SECURE ALL NECESSARY PERMITS FOR THIS PROJECT FROM ALL APPLICABLE GOVERNMENTAL AGENCIES.
2. ANY PERMITS WHICH MUST BE OBTAINED SHALL BE THE CONTRACTOR'S RESPONSIBILITY. THE CONTRACTOR SHALL BE RESPONSIBLE FOR ABIDING BY ALL CONDITIONS AND REQUIREMENTS OF THE PERMITS.
3. ALL WORK SHALL BE IN ACCORDANCE WITH LOCAL CODES AND THE ACI 318–14, "BUILDING REQUIREMENTS FOR STRUCTURAL CONCRETE".
4. THE CONTRACTOR SHALL NOTIFY THE APPLICABLE JURISDICTIONAL (STATE, COUNTY OR CITY) ENGINEER 24 HOURS PRIOR TO THE BEGINNING OF CONSTRUCTION.
5. ALL DIMENSIONS SHALL BE VERIFIED WITH THE PLANS (LATEST REVISION) PRIOR TO COMMENCING CONSTRUCTION. NOTIFY THE OWNER IMMEDIATELY IF DISCREPANCIES ARE DISCOVERED. THE CONTRACTOR SHALL HAVE A SET OF APPROVED PLANS AVAILABLE AT THE SITE AT ALL TIMES WHEN WORK IS BEING PERFORMED. A DESIGNATED RESPONSIBLE EMPLOYEE SHALL BE AVAILABLE FOR CONTACT BY GOVERNING AGENCY INSPECTORS.

MISCELLANEOUS:

1. ALL THREADED STRUCTURAL FASTENERS FOR ANTENNA SUPPORT ASSEMBLES SHALL CONFORM TO ASTM A307 OR ASTM 36. ALL STRUCTURAL FASTENERS FOR STRUCTURAL STEEL FRAMING SHALL CONFORM TO ASTM A325. FASTENERS SHALL BE 5/8" MIN. DIA. BEARING TYPE CONNECTIONS WITH THREADS EXCLUDED FROM THE PLANE. ALL EXPOSED FASTENERS, NUTS, AND WASHERS SHALL BE GALVANIZED UNLESS OTHERWISE NOTED. ALL ANCHORS INTO CONCRETE SHALL BE STAINLESS STEEL.
2. THE CONTRACTOR SHALL FURNISH ALL CONNECTION HARDWARE REQUIRED TO SECURE THE CABLES. CONNECTION HARDWARE SHALL BE STAINLESS STEEL.
3. NORTH ARROW SHOWN ON PLANS REFERS TO TRUE NORTH. CONTRACTOR SHALL VERIFY NORTH AND NOTIFY CONSULTANT OF ANY DISCREPANCY BEFORE STARTING CONSTRUCTION.
4. PROVIDE LOCK WASHERS FOR ALL MECHANICAL CONNECTIONS FOR GROUND CONDUCTORS. USE GRADE 304 STAINLESS STEEL HARDWARE THROUGHOUT.
5. THOROUGHLY REMOVE ALL PAINT AND CLEAN ALL DIRT FROM SURFACES REQUIRING GROUND CONNECTIONS.
6. MAKE ALL GROUND CONNECTIONS AS SHORT AND DIRECT AS POSSIBLE. AVOID SHARP BENDS. ALL BENDS TO BE A MIN. OF 8" RADIUS.
7. FOR GROUNDING TO BUILDING FRAME AND HATCH PLATE GROUND BARS, USE A TWO–BOLT HOLE NEPA DRILLED CONNECTOR SUCH AS T&B 32007 OR APPROVED EQUAL.
8. FOR ALL EXTERNAL GROUND CONNECTIONS, CLAMPS AND CADWELDS, APPLY A LIBERAL PROTECTIVE COATING OR AN ANTI–OXIDE COMPOUND SUCH AS 'NO–OXIDE A' BY DEARBORN CHEMICAL COMPANY.
9. REPAIR ALL METAL SURFACES THAT HAVE BEEN CUT OR DAMAGED BY REMOVING ANY EXISTING RUST AND APPLYING COLD GALVANIZATION.
10. ANTENNA CABLE LENGTHS HAVE BEEN DETERMINED BASED ON THESE PLANS. CABLE LENGTHS LISTED ARE APPROXIMATED AND ARE NOT INTENDED TO BE USED FOR FABRICATION. DUE TO FIELD CONDITIONS, ACTUAL CABLE LENGTHS VARY. CONTRACTOR MUST FIELD VERIFY ANTENNA CABLE LENGTHS PRIOR TO ORDER.

REV	DATE	DESCRIPTION
A	5/17/18	PRELIMINARY CDs REV "A"
0	8/3/18	REV 0 CDs ISSUED

USA ENG PROJECT NO.: 01818000–44

DRAWN BY:	CHECKED BY:
ML	MM

at&t
8601 W SUNRISE BLVD
PLANTATION, FL 33322

smartlink
1997 ANNAPOLIS EXCHANGE PKWY.
SUITE 200
ANNAPOLIS, MD 21401

PREPARED BY:
USA ENGINEERING
2818 CYPRESS RIDGE BLVD.
SUITE 110
WESLEY CHAPEL, FL 33544
(813) 994–0365
FL COA #31705

MARC P. MAIER
LICENSE
No 72513
STATE OF FLORIDA
PROFESSIONAL ENGINEER
AUGUST 03, 2018
MARC P. MAIER, PE
FL PROFESSIONAL ENGINEER LIC. # 72513

M112
FA #10069958
14707 S. DIXIE HWY
PALMETTO BAY, FL 33176

SHEET DESCRIPTION
GENERAL NOTES, ABBREVIATIONS

SHEET NUMBER
GN-1

USA ENGINEERING – T:\00–2018 PROJECTS\17–Smartlink\01 Smartlink SFL\M112_10069958\Design\10069958_M112_6C(FN)–BWE–4T4R CD.dwg August 3, 2018 2:32:06 PM jconnat

NOTES:

1. CONTRACTOR TO FILL ANY EXISTING GRAVEL AREAS THAT ARE DISTURBED DURING THE COURSE OF CONSTRUCTION, GRAVEL TO MATCH EXISTING.
2. THE CONTRACTOR TO ENSURE THAT NO DAMAGE OR DEBRIS OCCURS ON THE ADJACENT PROPERTIES.
3. THE CONTRACTOR SHALL SEED ALL DISTURBED AREAS WITH LOW MAINTENANCE NATIVE GRASS AND COVER WITH APPROVED STRAW.
4. CONTRACTOR SHALL PROVIDE ALL REQUIRED EROSION CONTROL TECHNIQUES AND BEST MANAGEMENT PRACTICES PER LOCAL AND AND STATE REQUIREMENTS AS APPLICABLE.
5. NORTH ARROW SHOWN ON PLANS REFERS TO TRUE NORTH. CONTRACTOR SHALL VERIFY NORTH AND INFORM ARCHITECT/ENGINEER OF ANY DISCREPANCY BEFORE STARTING CONSTRUCTION.

CONTRACTOR IS RESPONSIBLE FOR MODIFYING THE RAYCAP INSTALL ON THE TOWER TO ACCOMMODATE THE QUANTITY OF RRU'S.

THE CONTRACTOR MUST FIELD VERIFY ALL MEASUREMENTS AND FIELD CONDITIONS PRIOR TO THE COMMENCEMENT OF CONSTRUCTION.

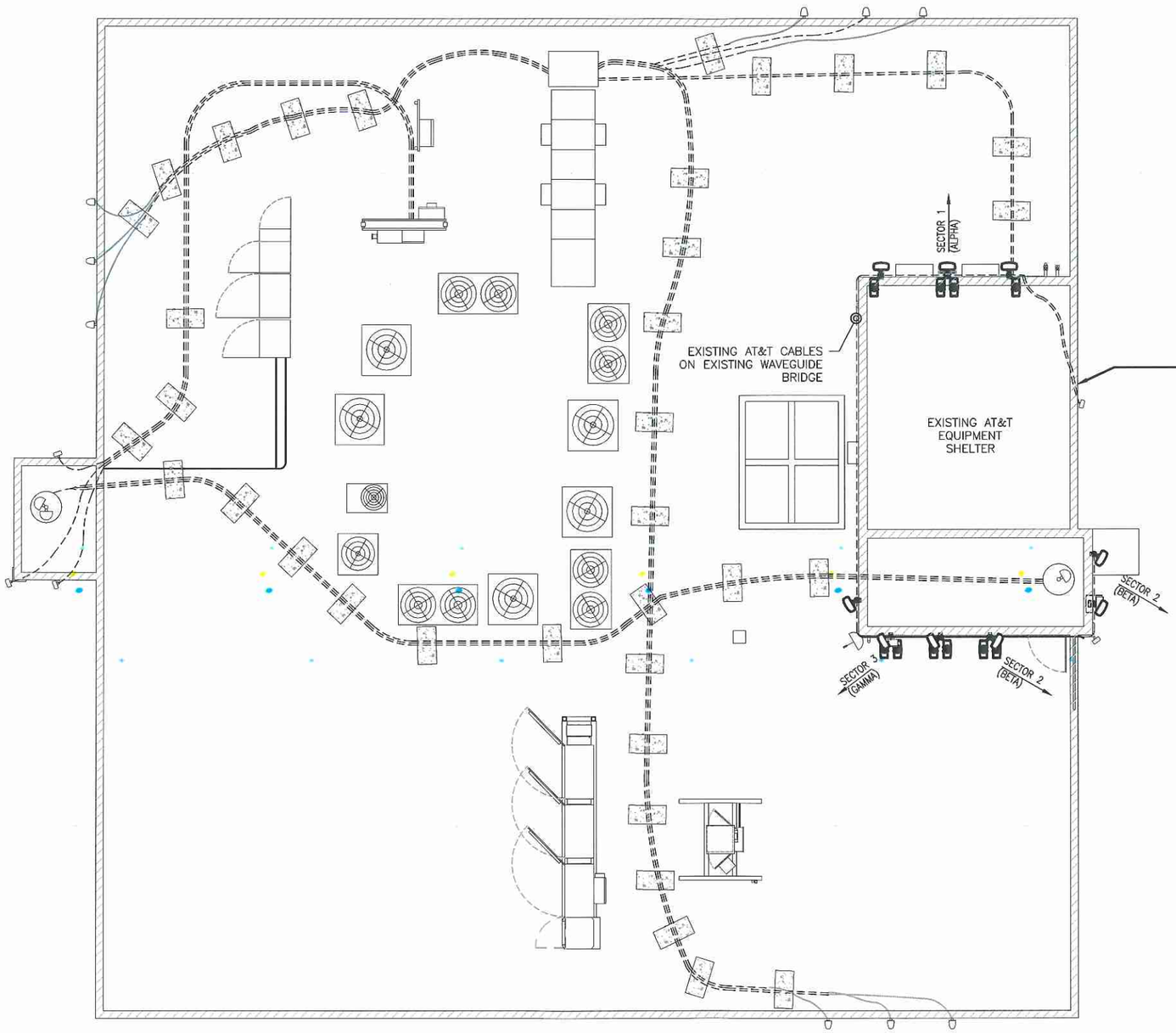

NOTE:
- EXISTING RRUS-11/850 INSTALLED AT GROUND LOCATION TO REMAIN (1 PER SECTOR, 3 TOTAL)
- PROPOSED B14-4478 TO BE INSTALLED AT GROUND LOCATION (1 PER SECTOR, 3 TOTAL)
- PROPOSED DIPLEXERS TO BE INSTALLED AT GROUND LOCATION (4 PER SECTOR, 12 TOTAL)

TRUE NORTH

CABLE LENGTH FROM EQUIPMENT ROOM	
SECTOR	CABLE LENGTH
A	40'±
B	80'±
C	55'±

1 / C-1 ROOF PLAN

SCALE: 1" = 10'
SCALE BASED ON 11"x17" ONLY

Sunshine State One Call 811®
CALL FLORIDA 811
ONE CALL - DIAL 811
CALL 3 WORKING DAYS
BEFORE YOU DIG
1-800-638-4097

REV	DATE	DESCRIPTION
A	5/17/18	PRELIMINARY CDs REV "A"
0	8/3/18	REV 0 CDs ISSUED

USA ENG PROJECT NO.: 01818000-44

DRAWN BY:	CHECKED BY:
ML	MM

at&t
8601 W SUNRISE BLVD
PLANTATION, FL 33322

smartlink
1997 ANNAPOLIS EXCHANGE PKWY.
SUITE 200
ANNAPOLIS, MD 21401

PREPARED BY:
USA ENGINEERING
2818 CYPRESS RIDGE BLVD.
SUITE 110
WESLEY CHAPEL, FL 33544
(813) 994-0365
FL COA #31705

MARC P. MAIER
LICENSE
No 72513
STATE OF FLORIDA
PROFESSIONAL ENGINEER

AUGUST 03, 2018

MARC P. MAIER, PE
FL PROFESSIONAL ENGINEER LIC. # 72513

M112
FA #10069958
14707 S. DIXIE HWY
PALMETTO BAY, FL 33176

SHEET DESCRIPTION
SITE PLAN

SHEET NUMBER
C-1

USA ENGINEERING – T:\00-2018 PROJECTS\17-Smartlink\01 Smartlink SF\M112_10069958\Design\10069958_M112_6C(FN)-BWE-474R CD.dwg August 3, 2018 2:32:07 PM jonnot

NOTES:

1. A STRUCTURAL ANALYSIS SHALL BE PERFORMED BY THE OWNER'S AGENT TO CERTIFY THAT THE EXISTING/PROPOSED COMMUNICATION STRUCTURE AND COMPONENTS ARE STRUCTURALLY ADEQUATE TO SUPPORT ALL EXISTING AND PROPOSED ANTENNAS, COAXIAL CABLES AND OTHER APPURTENANCES. THE OWNER'S AGENT SHALL FURNISH A CERTIFICATION LETTER SEALED BY A REGISTERED PROFESSIONAL ENGINEER STATING THAT THIS STRUCTURAL ANALYSIS WAS PREPARED IN ACCORDANCE WITH ALL APPLICABLE CODES AND STANDARDS.
2. IF ANY WORK IS PERFORMED AT THIS SITE THAT REQUIRES THE SITE TO BE OFF AIR OR TURNED DOWN, THE SWITCH IS TO BE NOTIFIED 48 HOURS PRIOR TO CONSTRUCTION VIA NCR/CTS.
3. INSTALLATION SHALL BE CONDUCTED BY FIELD CREWS EXPERIENCED IN THE ASSEMBLY AND ERECTION OF RADIO ANTENNAS, TRANSMISSION LINES, AND SUPPORT STRUCTURES. ANTENNA WORK TO BE INSTALLED PER THE REQUIREMENTS OF THE TOWER MANUFACTURER'S SPECIFICATION.
4. ANTENNA AND MOUNT DESIGN MUST COMPLY WITH TIA-EIA-222-G AND ALL LOCAL CODES.
5. CONTRACTOR TO PROVIDE THE PROPER COAX JUMPER SUPPORT ATTACHMENTS TO THE TOWER AND ANTENNA MOUNT.

CONTRACTOR IS RESPONSIBLE FOR MODIFYING THE RAYCAP INSTALLED ON THE TOWER TO ACCOMMODATE THE QUANTITY OF RRU'S.

THE CONTRACTOR MUST FIELD VERIFY ALL MEASUREMENTS AND FIELD CONDITIONS PRIOR TO THE COMMENCEMENT OF CONSTRUCTION.

NOTES:

1. REFER TO CURRENT RFDS FOR ADDITIONAL INFO.
2. ADJUST ANTENNA MOUNTS AS REQUIRED TO ACHIEVE THE AZIMUTH SPECIFIED AND LIMIT RF SHADOWING
3. UNLESS NOTED OTHERWISE THE CONTRACTOR MUST PROVIDE ALL MATERIAL NECESSARY.
4. CONTRACTOR TO RETURN ALL EXISTING ANTENNAS BEING REMOVED TO AT&T.

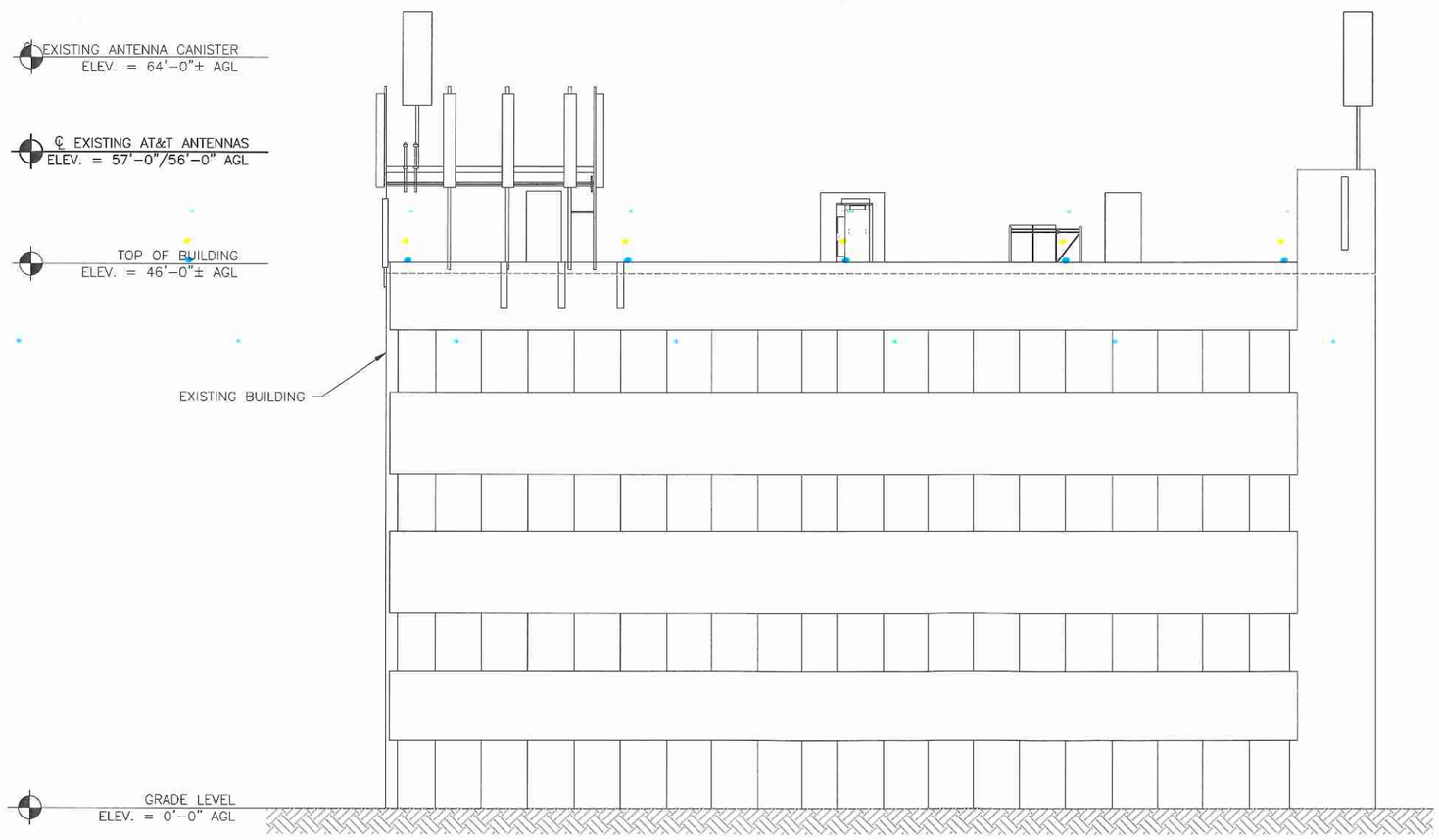

1 / S-1 **BUILDING ELEVATION**
SCALE: N.T.S.

REV	DATE	DESCRIPTION
A	5/17/18	PRELIMINARY CDs REV "A"
0	8/3/18	REV 0 CDs ISSUED

USA ENG PROJECT NO.: 01818000-44

DRAWN BY:	CHECKED BY:
ML	MM

at&t
8601 W SUNRISE BLVD
PLANTATION, FL 33322

smartlink
1997 ANNAPOLIS EXCHANGE PKWY.
SUITE 200
ANNAPOLIS, MD 21401

PREPARED BY:
USA ENGINEERING
2818 CYPRESS RIDGE BLVD.
SUITE 110
WESLEY CHAPEL, FL 33544
(813) 994-0365
FL COA #31705

MARC P. MAIER
LICENSE
No 72513
STATE OF FLORIDA
PROFESSIONAL ENGINEER

AUGUST 03, 2018

MARC P. MAIER, PE
FL PROFESSIONAL ENGINEER LIC. # 72513

M112
FA #10069958
14707 S. DIXIE HWY
PALMETTO BAY, FL 33176

SHEET DESCRIPTION
BUILDING ELEVATION

SHEET NUMBER
S-1

USA ENGINEERING - T:\00-2018 PROJECTS\17-Smartlink\01 Smartlink SFL\M112_10069958\Design\10069958_M112_6C(FN)-BWE-4T4R CD.dwg August 3, 2018 2:32:08 PM jeannat

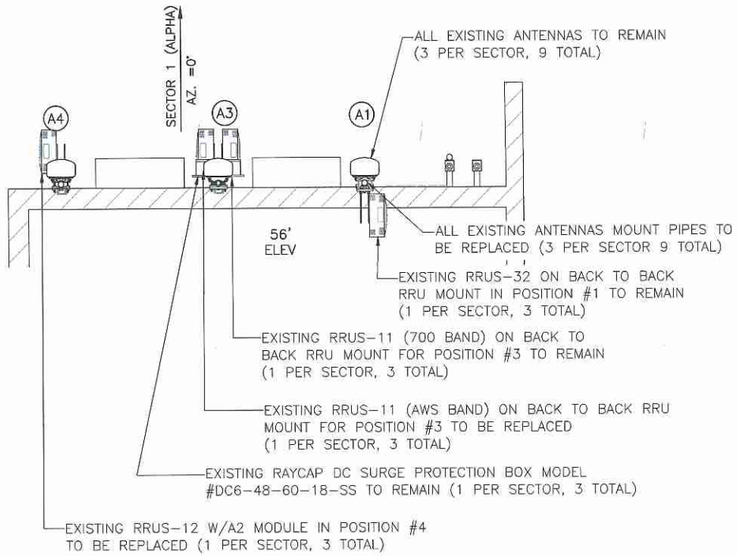

ALPHA SECTOR

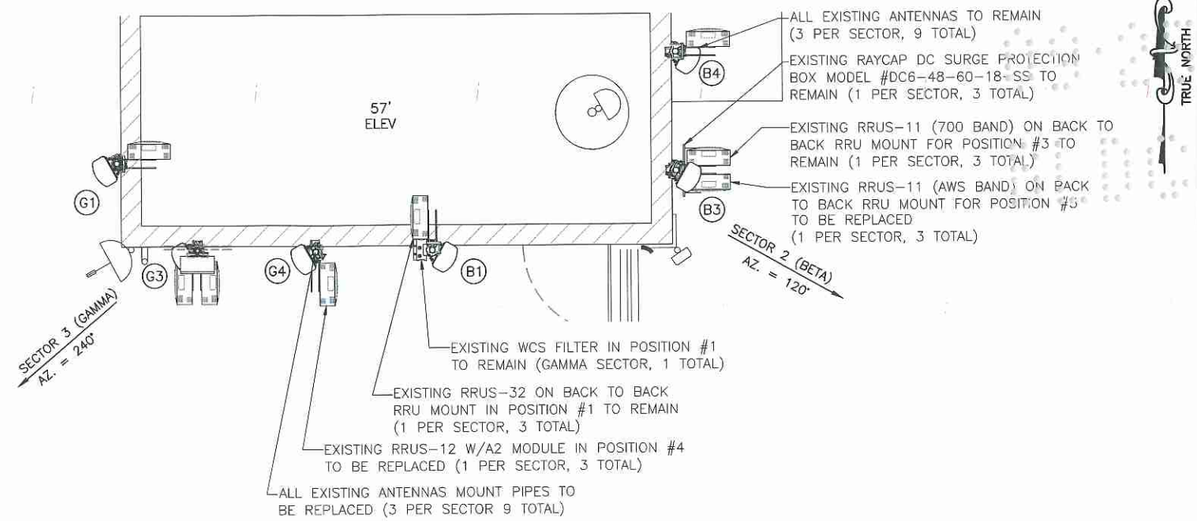

BETA & GAMMA SECTORS

2 / S-1 EXISTING ANTENNA CONFIGURATION DETAIL

SCALE: 1" = 5'

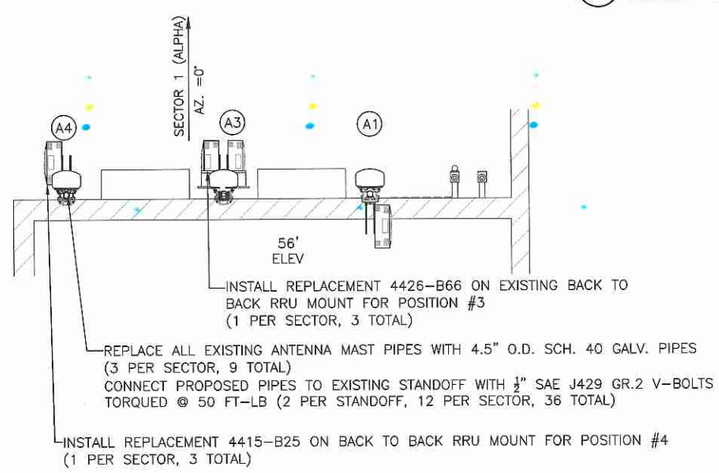

ALPHA SECTOR

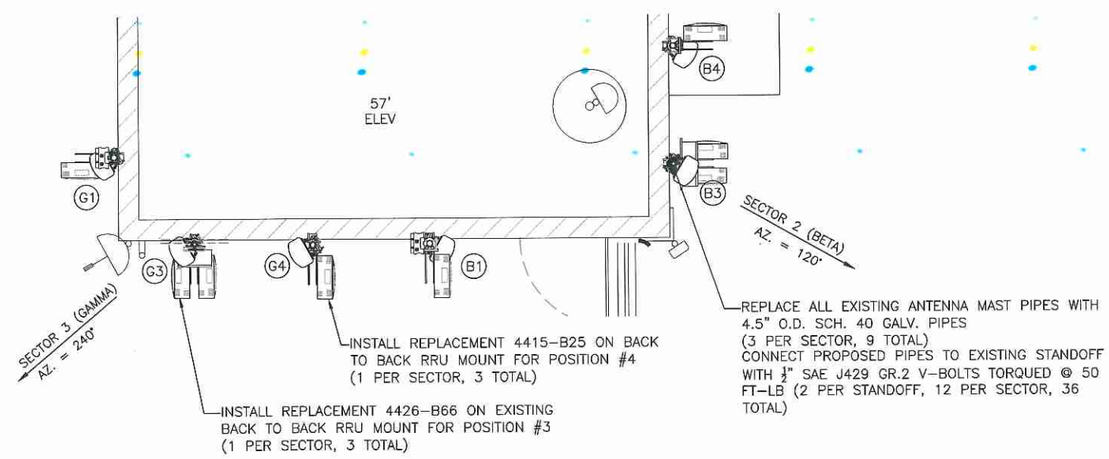

BETA & GAMMA SECTORS

NOTES:

1. REFER TO CURRENT RFDS FOR ADDITIONAL INFO.
2. ADJUST ANTENNA MOUNTS AS REQUIRED TO ACHIEVE THE AZIMUTH SPECIFIED AND LIMIT RF SHADOWING
3. UNLESS NOTED OTHERWISE THE CONTRACTOR MUST PROVIDE ALL MATERIAL NECESSARY.
4. CONTRACTOR TO RETURN ALL EXISTING ANTENNAS BEING REMOVED TO AT&T.

NOTE:

- EXISTING 850/RRUS-12 INSTALLED IN SHELTER TO REMAIN (1 PER SECTOR, 3 TOTAL)
- PROPOSED B14-4478 TO BE INSTALLED IN APPROVED SHELTER LOCATION (1 PER SECTOR, 3 TOTAL)
- PROPOSED DIPLEXERS TO BE INSTALLED IN APPROVED SHELTER LOCATION (4 PER SECTOR, 12 TOTAL)

3 / S-1 PROPOSED ANTENNA CONFIGURATION DETAIL

SCALE: 1" = 7'

REV	DATE	DESCRIPTION
A	5/17/18	PRELIMINARY CDs REV "A"
0	8/3/18	REV 0 CDs ISSUED

USA ENG PROJECT NO.: 01818000-44

DRAWN BY:	CHECKED BY:
ML	MM

at&t
8601 W SUNRISE BLVD
PLANTATION, FL 33322

smartlink
1997 ANNAPOLIS EXCHANGE PKWY.
SUITE 200
ANNAPOLIS, MD 21401

PREPARED BY:
USA ENGINEERING
2818 CYPRESS RIDGE BLVD.
SUITE 110
WESLEY CHAPEL, FL 33544
(813) 994-0365
FL COA #31705

MARC P. MAIER
LICENSE
No 72513
STATE OF FLORIDA
PROFESSIONAL ENGINEER

AUGUST 03, 2018
MARC P. MAIER, PE
FL PROFESSIONAL ENGINEER LIC. # 72513

M112
FA #10069958
14707 S. DIXIE HWY
PALMETTO BAY, FL 33176

SHEET DESCRIPTION
ANTENNA ORIENTATION

SHEET NUMBER
S-2

USA ENGINEERING – T:\00-2018 PROJECTS\17-Smartlink\01 Smartlink SFL\M112_10069958\Design\10069958_M112_6C(FN)-BWE-4T4R CD.dwg August 3, 2018 2:32:09 PM jcannat

ERICSSON 4415 B25
- DIMENSIONS (H x W x D):
  14.96" x 13.19" x 5.39"
- WEIGHT: 44 LBS
- TX = 1930 – 1995 MHz
- RX = 1850 – 1915 MHz
- CPRI 2 PORTS x 2.5/4.9/9.8/10.1 Gbps

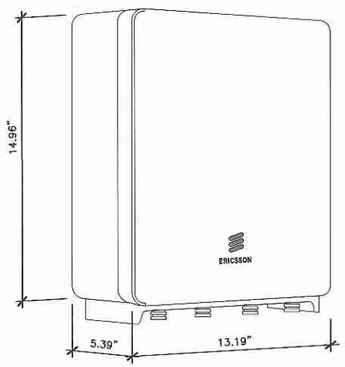

NOTE:
RRUS CAN ONLY BE
PAINTED ON SOLAR SHIELD.

1 / S-3 4415 B25 DETAIL
SCALE: N.T.S.

ERICSSON 4426 B66
- DIMENSIONS (H x W x D):
  14.96" x 13.19" x 5.8"
- WEIGHT: 48.5 LBS
- UP TO 6 CARRIERS LTE IN MIMO
- 2x2.5/4.9/9.8/10.1 GBPS CPRI
- HEAT DISSIPATION: –40 TO +55°

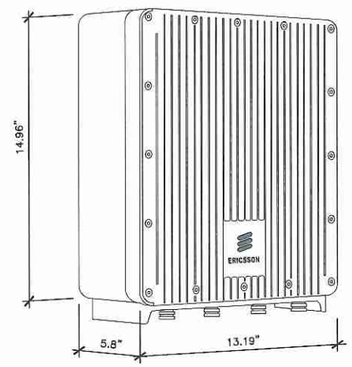

NOTE:
RRUS CAN ONLY BE
PAINTED ON SOLAR SHIELD.

2 / S-3 4426 B66 DETAIL
SCALE: N.T.S.

ERICSSON B14 4478
- DIMENSIONS (H x W x D):
  16.5" x 13.4" x 7.7" (INCLUDES SUNSHIELD)
- WEIGHT: 59.9 LBS
- CLIMATE: –40°C TO +55°C
  (SELF CONVECTION SILENT, NO FANS, IP55)
- POWER CONSUMPTION: 80 WATTS (TYP.)

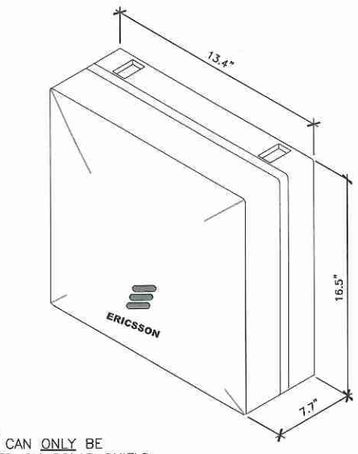

NOTE:
RRUS CAN ONLY BE
PAINTED ON SOLAR SHIELD.

3 / S-3 B14 4478 DETAIL
SCALE: N.T.S.

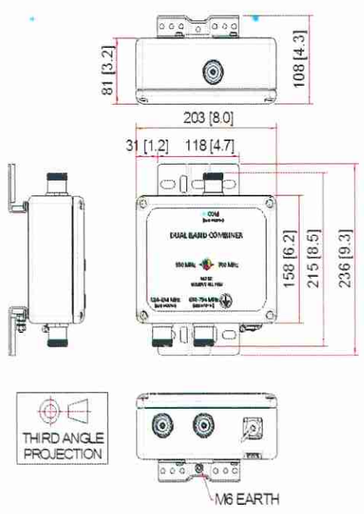

4 / S-3 KAELUS DBC0108F1V92
SCALE: N.T.S.

KEYNOTE LEGEND:
1. SECTOR GROUND BAR (TYP).
2. COLLECTOR GROUND BAR.
3. NEW ANTENNA.
4. SINGLE PAIR FIBER & DC POWER.
5. JUMPER CABLE, 1/2" (TYP).
6. PIPE MOUNT.
7. DC POWER & FIBER TO RAYCAP UNIT.
8. REMOTE RADIO HEAD (RRH) (IF APPLICABLE).
9. DC6 RAYCAP SURGE SUPPRESSOR (IF APPLICABLE).

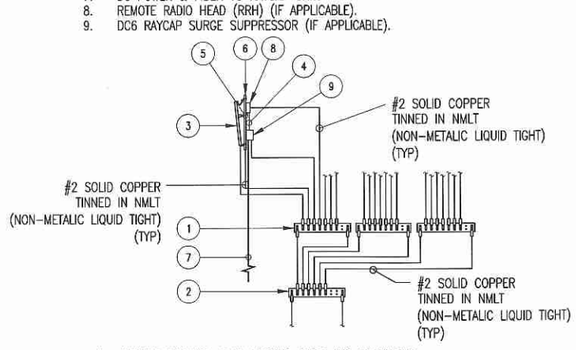

1. UTILIZE EXISTING AT&T GROUND BARS AND GROUNDING.
2. ADD GROUND BARS IF THERE ARE INSUFFICIENT LUG POSITIONS.
3. REFERENCE AT&T BONDING & GROUNDING PRACTICE TP76416.

5 / S-3 ANTENNA GROUNDING SCHEMATIC
SCALE: N.T.S.

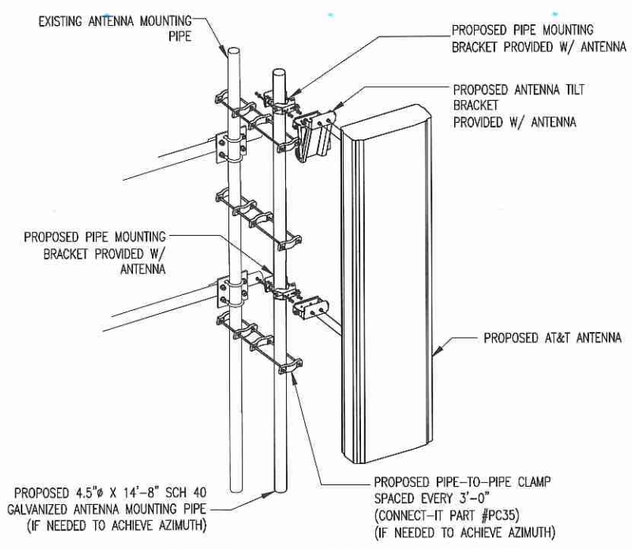

6 / S-3 ANTENNA MOUNTING DETAIL
SCALE: N.T.S.

REV	DATE	DESCRIPTION
A	5/17/18	PRELIMINARY CDs REV "A"
0	8/3/18	REV 0 CDs ISSUED

USA ENG PROJECT NO.: 01818000-44

DRAWN BY:	CHECKED BY:
ML	MM

at&t
8601 W SUNRISE BLVD
PLANTATION, FL 33322

smartlink
1997 ANNAPOLIS EXCHANGE PKWY.
SUITE 200
ANNAPOLIS, MD 21401

PREPARED BY:
USA ENGINEERING
2818 CYPRESS RIDGE BLVD.
SUITE 110
WESLEY CHAPEL, FL 33544
(813) 994-0365
FL COA #31705

MARC P. MAIER
LICENSE
No 72513
STATE OF FLORIDA
PROFESSIONAL ENGINEER

AUGUST 03, 2018

MARC P. MAIER, PE
FL PROFESSIONAL ENGINEER LIC. # 72513

M112
FA #10069958
14707 S. DIXIE HWY
PALMETTO BAY, FL 33176

SHEET DESCRIPTION
MISC. DETAILS

SHEET NUMBER
S-3

USA ENGINEERING – T:\00-2018 PROJECTS\17-Smartlink\01 Smartlink SFL\M112_10069958\Design\10069958_M112_6C(FN)-BWE-4T4R CD.dwg August 3, 2018 2:32:10 PM joannat

DC / FIBER DEMARCATION BOX

RAYCAP DC FIBER DEMARCATION BOX			CABLES				NOTES
MOUNTING HEIGHT	MODEL	QTY	MODEL	SIZE	QTY	LENGTH PER LINE	ALPHA = 40'
56'-0"/57'-0"	DC6-48-60-18-SS	3	ROSENBERGER (18) PAIR FIBER TRUNK	3/8"	3	** VARIES	BETA = 80'
			(6)- #8 AWG TINNED COPPER CONDUCTORS	3/4"	6	** VARIES	GAMMA = 55'

ANTENNA AND COAX SCHEDULE

		ANTENNAS							CABLES					RRU		A2	COMPONENT			TMA	
		RAD	ANTENNA			APPROXIMATE	DOWN TILT									MOD		TWR	GRND		
SECTOR	AZ	CENTER	MAKE	MODEL	(QTY)	ANTENNA SPECS	ELEC	MECH	MODEL	SIZE	(QTY)	LENGTH/ LINE	COLOR CODE	MODEL	(QTY)	(QTY)	MODEL	(QTY)	(QTY)	MODEL	(QTY)
ALPHA (A1)	0°	56'-0"	KMW	ET-X-UW-70-16-70-18-iR-AT	1	H=91.7" x W=12" x D=6.3"	1°/4°	-	LDF5-50A	7/8"	2	40'-0"	1 RED	**RRUS-12	1	-	DBC0108F1V92	-	2	-	-
									ROSENBERGER FIBER JUMPER (DC6 TO RRU)	3/8"	1	15'-0"	1 RED	RRUS-32	1						
									ROSENBERGER SINGLE PAIR DC CABLE (DC6 TO RRU)	7/16"	1	15'-0"	1 RED								
									1/2" COAX JUMPER (RRU TO ANTENNA)	1/2"	4	10'-0"	1 RED								
ALPHA (A2)	-	-	-	-	-	-	-	-	-	-	-	-	-	-	-	-	-	-	-	-	-
ALPHA (A3)	0°	56'-0"	KMW	ET-X-UW-70-16-70-18-iR-AT	1	H=91.7" x W=12" x D=6.3"	8°/5°	-	-	-	-	-	-	-	-	-	-	-	-	-	-
									ROSENBERGER FIBER JUMPER (DC6 TO RRU)	3/8"	2	15'-0"	3 RED	RRUS-11	1	-					
									ROSENBERGER SINGLE PAIR DC CABLE (DC6 TO RRU)	7/16"	2	15'-0"	3 RED	4426-B66	1						
									1/2" COAX JUMPER (RRU TO ANTENNA)	1/2"	6	10'-0"	3 RED								
ALPHA (A4)	0°	56'-0"	KMW	ET-X-UW-70-16-70-18-iR-AT	1	H=91.7" x W=12" x D=6.3"	1°/1°	-	LDF5-50A	7/8"	2	40'-0"	4 RED	**B14-4478	1	-	DBC0108F1V92		2		
									ROSENBERGER FIBER JUMPER (DC6 TO RRU)	3/8"	1	15'-0"	4 RED	4415-B25	1	-					
									ROSENBERGER SINGLE PAIR DC CABLE (DC6 TO RRU)	7/16"	1	15'-0"	4 RED								
									1/2" COAX JUMPER (RRU TO ANTENNA)	1/2"	4	10'-0"	4 RED								
BETA (B1)	120°	57'-0"	KMW	ET-X-UW-68-14-65-18-iR-AT	1	H=72" x W=12" x D=6.3"	1°/2°	-	LDF5-50A	7/8"	2	80'-0"	1 BLUE	**RRUS-12	1	-	DBC0108F1V92	-	2	-	-
									ROSENBERGER FIBER JUMPER (DC6 TO RRU)	3/8"	1	15'-0"	1 BLUE	RRUS-32	1						
									ROSENBERGER SINGLE PAIR DC CABLE (DC6 TO RRU)	7/16"	1	15'-0"	1 BLUE								
									1/2" COAX JUMPER (RRU TO ANTENNA)	1/2"	4	10'-0"	1 BLUE								
BETA (B2)	-	-	-	-	-	-	-	-	-	-	-	-	-	-	-	-	-	-	-	-	-
BETA (B3)	120°	57'-0"	KMW	ET-X-UW-68-14-65-18-iR-AT	1	H=72" x W=12" x D=6.3"	4°/5°	-	-	-	-	-	-	-	-	-	-	-	-	-	-
									ROSENBERGER FIBER JUMPER (DC6 TO RRU)	3/8"	2	15'-0"	3 BLUE	RRUS-11	1	-					
									ROSENBERGER SINGLE PAIR DC CABLE (DC6 TO RRU)	7/16"	2	15'-0"	3 BLUE	4426-B66	1						
									1/2" COAX JUMPER (RRU TO ANTENNA)	1/2"	6	10'-0"	3 BLUE								
BETA (B4)	120°	57'-0"	KMW	ET-X-UW-68-14-65-18-iR-AT	1	H=72" x W=12" x D=6.3"	1°/1°	-	LDF5-50A	7/8"	2	80'-0"	4 BLUE	**B14-4478	1	-	DBC0108F1V92		2		
									ROSENBERGER FIBER JUMPER (DC6 TO RRU)	3/8"	1	15'-0"	4 BLUE	4415-B25	1	-					
									ROSENBERGER SINGLE PAIR DC CABLE (DC6 TO RRU)	7/16"	1	15'-0"	4 BLUE								
									1/2" COAX JUMPER (RRU TO ANTENNA)	1/2"	4	10'-0"	4 BLUE								
GAMMA (G1)	240°	57'-0"	KMW	ET-X-UW-70-16-70-18-iR-AT	1	H=91.7" x W=12" x D=6.3"	1°/4°	-	LDF5-50A	7/8"	2	55'-0"	1 GREEN	**RRUS-12	1	-	DBC0108F1V92	-	2	-	-
									ROSENBERGER FIBER JUMPER (DC6 TO RRU)	3/8"	1	15'-0"	1 GREEN	RRUS-32	1		KFTDR00110030	1			
									ROSENBERGER SINGLE PAIR DC CABLE (DC6 TO RRU)	7/16"	1	15'-0"	1 GREEN								
									1/2" COAX JUMPER (ANTENNA TO FILTER)	1/2"	4	6'-0"	1 GREEN								
									1/2" COAX JUMPER (FILTER TO RRU)	1/2"	4	6'-0"	1 GREEN								
GAMMA (G2)	-	-	-	-	-	-	-	-	-	-	-	-	-	-	-	-	-	-	-	-	-
GAMMA (G3)	240°	57'-0"	KMW	ET-X-UW-70-16-70-18-iR-AT	1	H=91.7" x W=12" x D=6.3"	8°/5°	-	-	-	-	-	-	-	-	-	-	-	-	-	-
									ROSENBERGER FIBER JUMPER (DC6 TO RRU)	3/8"	2	15'-0"	3 GREEN	RRUS-11	1	-					
									ROSENBERGER SINGLE PAIR DC CABLE (DC6 TO RRU)	7/16"	2	15'-0"	3 GREEN	4426-B66	1						
									1/2" COAX JUMPER (RRU TO ANTENNA)	1/2"	6	10'-0"	3 GREEN								
GAMMA (G4)	240°	57'-0"	KMW	ET-X-UW-70-16-70-18-iR-AT	1	H=72" x W=12" x D=6.3"	1°/1°	-	LDF5-50A	7/8"	2	55'-0"	4 GREEN	**B14-4478	1	-	DBC0108F1V92		2		
									ROSENBERGER FIBER JUMPER (DC6 TO RRU)	3/8"	1	15'-0"	4 GREEN	4415-B25	1	-					
									ROSENBERGER SINGLE PAIR DC CABLE (DC6 TO RRU)	7/16"	1	15'-0"	4 GREEN								
									1/2" COAX JUMPER (RRU TO ANTENNA)	1/2"	4	10'-0"	4 GREEN								
				TOTAL	9				TOTAL 7/8" COAX (ACTIVE)		12	700'-0"		TOTAL	18	1	TOTAL	1	12	TOTAL	0
									TOTAL FIBER JUMPER		12	180'-0"									
									TOTAL DC JUMPER		12	180'-0"									
									TOTAL 1/2" JUMPERS		46	428'-0"									
									TOTAL 5/16" RET CABLES		3	175'-0"									

* ANTENNA AND COAX INFORMATION PROVIDED FROM THE LTE 6C RFDS V1.00 DATED 11/29/17.
* CONTRACTOR TO VERIFY RF INFO WITH CLIENT PRIOR TO CONSTRUCTION.
* COAX LENGTHS ARE APPROXIMATE AND MUST BE VERIFIED PRIOR TO CONSTRUCTION.
* ALL COAX SHALL BE COLOR CODED AT TOP AN BOTTOM JUMPER AND AT TOP OF TOWER BOTTOM OF TOWER, AND INSIDE SHELTER ON MAIN COAX.
* EACH MAIN COAX SHALL HAVE CORROSION PROOF "ID TAGS" INSTALLED INSIDE THE SHELTER AT THE PORT AND AT THE ANTENNA.
* QUANTITIES GIVEN ARE TOTAL EXISTING AND PROPOSED.

**NOTE: (3) EXISTING RRUS-12 TO REMAIN, (3) PROPOSED B14-4478 TO BE INSTALLED AT GROUND (INCLUDED IN TOTALS)

1 AN-1 **ANTENNA & COAX SCHEDULE**
SCALE: N.T.S.

REV	DATE	DESCRIPTION
A	5/17/18	PRELIMINARY CDs REV "A"
0	8/3/18	REV 0 CDs ISSUED

USA ENG PROJECT NO.: 01818000-44

DRAWN BY:	CHECKED BY:
ML	MM

at&t
8601 W SUNRISE BLVD
PLANTATION, FL 33322

smartlink
1997 ANNAPOLIS EXCHANGE PKWY.
SUITE 200
ANNAPOLIS, MD 21401

PREPARED BY:
USA ENGINEERING
2818 CYPRESS RIDGE BLVD.
SUITE 110
WESLEY CHAPEL, FL 33544
(813) 994-0365
FL COA #31705

MARC P. MAIER
LICENSE
No 72513
STATE OF FLORIDA
PROFESSIONAL ENGINEER

AUGUST 03, 2018

MARC P. MAIER, PE
FL PROFESSIONAL ENGINEER LIC. # 72513

M112
FA #10069958
14707 S. DIXIE HWY
PALMETTO BAY, FL 33176

SHEET DESCRIPTION
ANTENNA SCHEDULE

SHEET NUMBER
AN-1

USA ENGINEERING – T:\00-2018 PROJECTS\17-Smartlink\01 Smartlink SFL\M112_10069958\Design\10069958_M112_6C(FN)-BWE-4T4R CD.dwg August 3, 2018 2:32:10 PM jpannet

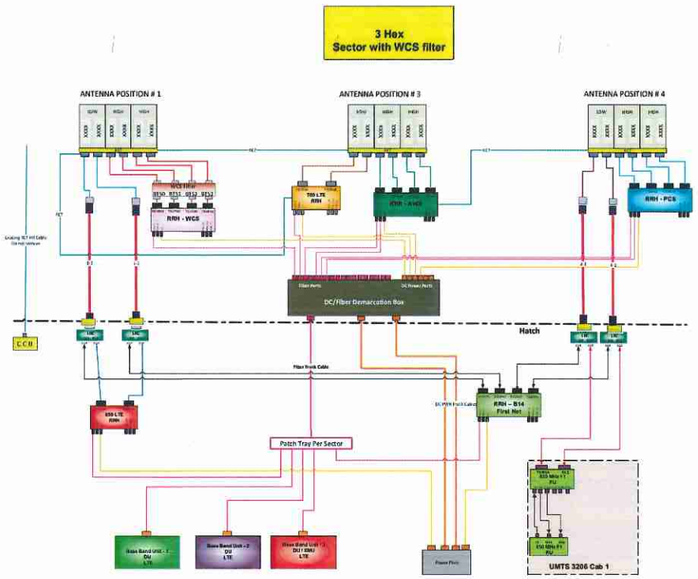

1 AN-2 **TYPICAL RISER DIAGRAM**
SCALE: N.T.S.

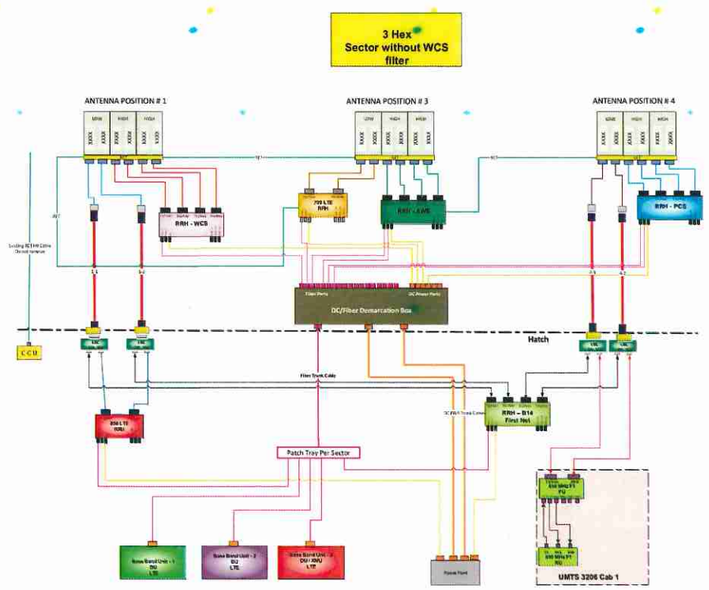

2 AN-2 **DC RISER DIAGRAM**
SCALE: N.T.S.

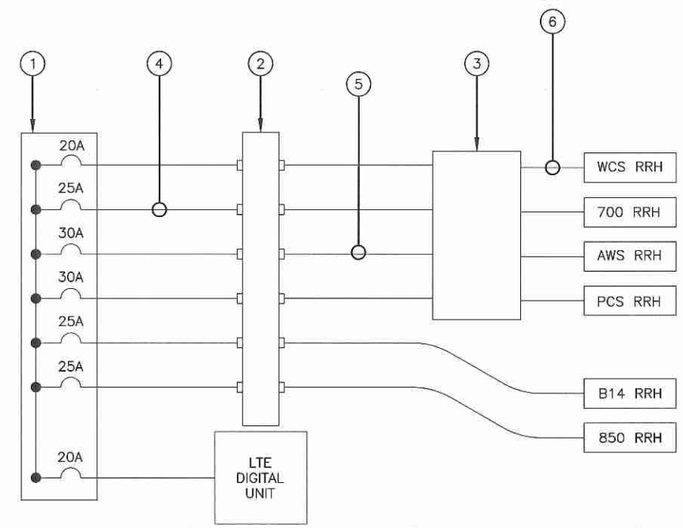

KEYNOTE LEGEND:

1. −48V DC POWER PLANT.
2. (1) RACK MOUNTED RAYCAP DC SURGE PROTECTOR (DC6−48−60−RM).
3. RAYCAP FIBER AND DC DISTRIBUTION UNIT (DC6−48−60−18−SS).
4. #8 AWG CONDUCTORS.
5. PROVIDE (2) 6−CONDUCTOR #8 AWG BUNDLES FOR DC POWER FROM RACK MOUNTED RAYCAP SURGE PROTECTION UNIT TO THE RAYCAP FIBER AND DISTRIBUTION UNIT ON TOWER.
6. PROPOSED FIBER AND DC CABLE ROUTED TO PROPOSED RRH UNITS.

REV	DATE	DESCRIPTION
A	5/17/18	PRELIMINARY CDs REV "A"
0	8/3/18	REV 0 CDs ISSUED

USA ENG PROJECT NO.: 01818000−44

DRAWN BY:	CHECKED BY:
ML	MM

at&t
8601 W SUNRISE BLVD
PLANTATION, FL 33322

smartlink
1997 ANNAPOLIS EXCHANGE PKWY.
SUITE 200
ANNAPOLIS, MD 21401

PREPARED BY:
USA ENGINEERING
2818 CYPRESS RIDGE BLVD.
SUITE 110
WESLEY CHAPEL, FL 33544
(813) 994−0365
FL COA #31705

MARC P. MAIER
LICENSE
No 72513
STATE OF
FLORIDA
PROFESSIONAL ENGINEER

AUGUST 03, 2018

MARC P. MAIER, PE
FL PROFESSIONAL ENGINEER LIC. # 72513

M112
FA #10069958
14707 S. DIXIE HWY
PALMETTO BAY, FL 33176

SHEET DESCRIPTION
ANTENNA
RISER DIAGRAMS

SHEET NUMBER
AN-2

USA ENGINEERING − T:\00−2018 PROJECTS\17−Smartlink\01 Smartlink SFL\M112_10069958\Design\10069958_M112_6C(FN)−BWE−4T4R CD.dwg August 3, 2018 2:32:11 PM joannat