Request #1: Interlocal Agreement authorizing traffic devices been executed by the County (Palmetto Bay 49 permanent speed humps);

Please see "Attachment A"

Request #2: Please provide verification that the County has reviewed and approved the Village of Palmetto Bay's traffic engineering study;

County approval not required. Please refer to Interlocal Agreement.

Request #3: Please provide a copy of the approval given by Miami-Dade County for each and every speed hump/table. Palmetto Bay responded, "Verbal Approvals only. Pending Inter-local approval.";

County approval not required please refer to approved Interlocal Agreement

Request #4: Please provide the County's verification that each of the 49 permanent speed humps received "verbal approval" by the County.;

Response: No records available (verbal approval not required)

Request #5: Please provide me with the County's verification that verifies that verbal approval was authorized and if so, under what specific authority, i.e. citation or policy. Requestor would appreciate scanned and e-mailed copies.

Response: No records available (verbal approval not required)

"A"

THIS INTERGOVERNMENTAL AGENCY AGREEMENT TO PERFORM TRAFFIC ENGINEERING FUNCTIONS

THIS INTERGOVERNMENTAL AGENCY AGREEMENT TO PERFORM TRAFFIC ENGINEERING FUNCTIONS **(the Agreement),** made and entered into this 6th day of April, 2017, by and between the **VILLAGE OF PALMETTO BAY, FLORIDA,** a municipal corporation of the STATE OF FLORIDA ("the Village"), and **MIAMI-DADE COUNTY (COUNTY),** a political subdivision of the STATE OF FLORIDA, MIAMI-DADE County (the "County")

WITNESSETH

WHEREAS, pursuant to Section 2-96.1 of the Miami-Dade County Code, all traffic control and traffic engineering services in Miami-Dade County are under the exclusive jurisdiction of the COUNTY; and

WHEREAS, the VILLAGE desires to assume the installation and maintenance responsibilities of certain traffic engineering functions pertaining to its local municipal streets only and has requested the County to allow it to perform the function of conducting engineering studies for the feasibility of traffic calming devices and installing traffic calming; and

WHEREAS, the Village has continuing services Transportation Engineers available to plan, design and perform construction inspection of Transportation Projects within its Capital Improvements Programs, and has represented to the County that it is capable, equipped, and qualified to perform the duties and functions requested herein; and

WHEREAS, the VILLAGE Council has adopted Resolution 2016-69, attached hereto as exhibit "A" and by reference made a part hereof, authorized its office(s) to enter into this **AGREEMENT.**

NOW THEREFORE, the VILLAGE and the COUNTY agree as follows:

1. The recitals set forth above are incorporated herein by reference.
2. The VILLAGE may install and maintain the following designated types of traffic calming devices, and/or signs (collectively the "Traffic Calming Devices") and only on those local municipal streets operated and maintained by the Village within its boundaries, and not less than 250 feet from existing traffic signals, County roadways, State roadways and the boundaries of the Village limits; or within school zones, or adjacent to bicycle facilities or hospitals:

a) Traffic Circles

b) Speed Humps

c) Historic Street Name Signs

d) In-Street Pedestrian Crossing Signs

e) Raised Intersections

3. Any such Traffic Calming Devices may be installed on local municipal streets only after an appropriate traffic engineering study has been performed and signed and sealed by a Florida licensed professional engineer, and has received written approval by the Village Manager or his/her designee. A copy of such traffic study must be submitted to the Department of Transportation and Public Works ("DTPW").

4. Any such Traffic Calming Devices may be installed on local municipal streets only after sealed and signed design plans have been reviewed and received written approval by the Village, through its Village Manager or his/her designee. Provided that such design plans utilize the standard County design attached as Exhibit "B", or the standard Village design attached as Exhibit "C," as may be applicable, no additional review or approval by the County shall be required before installation. To the extent that design plans deviate from the standard design attached as Exhibit "B", such plans shall be submitted to the County for its review and written approval. A copy of such design plans must be submitted to the applicable Department of the County.

5. The VILLAGE shall attach a decal to the back of the sign panels indicating the Village's ownership and date of installation.

6. The VILLAGE assumes sole and complete responsibility for the maintenance of all such Traffic Calming Devices.

7. The VILLAGE assumes sole and complete liability for any and all accidents, damages, claims, and/or injuries which may or are alleged to occur or arise out of the installation, operation or maintenance of said Traffic Control Devices, and hereby indemnifies and saves harmless the County from any and all claims and damages arising from such installation, operation or maintenance of said Traffic Calming Devices. All Traffic Calming Devices installed by the VILLAGE in accordance with this AGREEMENT shall conform to the applicable requirements established by the following publications including latest **revisions**:

   Manual on Uniform Traffic Control Devices for Streets and Highways, U.S. Department of Transportation Federal Highway Administration

   Standard Highway Signs, U.S. Department of Transportation, Federal Highway Administration.

   A Policy on Geometric Design of Highways and Streets, American Association of State Highway and Transportation Officials (AASHTO)

   Roundabouts: An Informational Guide, Federal Highway Administration, U.S. Department of Transportation

   Florida Roundabout Guide, Florida Department of Transportation

   Florida Department of Transportation's Standard Specifications for Road and Bridge Construction.

   Florida Bicycle Facilities Planning and Design Handbook, Florida Department of Transportation

   Miami-Dade County Public Works Standard Details Manual

   Miami-Dade County Traffic Flow Modification(s)/Street Closure Procedure,

Revised January, 2009, Attachment "A," or any other comparative criteria available to municipalities as may be in existence or approved in time by the County, with the decision to elect one option or the other to be determined at the Village's discretion.

8. Notwithstanding any other term in this Agreement, nothing shall be deemed to be a waiver of either the VILLAGE or the COUNTY'S immunity or limitation of liability as provided pursuant to Section 768.28, Florida Statues, as may be amended from time to time.

9. For installation of Traffic Control Devices, the VILLAGE shall hire a COUNTY licensed contractor or perform the work in-house by the Village's Public Works crew.

10. Should the VILLAGE install street name signs at the same site where a stop-top street name sign exists, then the VILLAGE shall first install their sign on a separate post, not to interfere with any other traffic sign, other corners of the intersection may be used for the Village sign. Subsequently, the Village shall remove the County's stop-top street name signs by an approved sign contractor. All signs and hardware removed shall be dismantled and returned to the Traffic Signals and Signs Division of the County's Department of Transportation and Public Works. Street name signs installed at the intersection of two (2) local roads should be placed at the northeast or northwest corner. Village historic street name signs shall be of a design approved by DTPW. In-street pedestrian crossing signs placed on pavement shall not be metal type.

11. The VILLAGE shall be responsible for keeping records of any and all installation and repairs, and furnishing pertinent documents as and when said records may be requested by the County.

12. Either the Village or the County may, in their respective sole and complete discretion, terminate this Agreement, with or without cause and/or convenience of the terminating party, upon twenty (20) business days written notice; provided, however, the Village shall continue to maintain, repair, and be responsible for any traffic calming devices and signs installed by the Village while this Agreement was in effect. Prior to the termination of this Agreement, however, the Village may elect to remove any one or all Traffic Calming Devices installed by the Village; provided the Village shall restore the roadway and area in which the Traffic Calming Devices was located to the condition that existed before the Village's installation.

13. Upon written notification by the County, the Village shall immediately remove any Traffic Calming Device, at the Village's sole cost and expense that is not in compliance with the terms of this Agreement.

14. Any notice or communication required hereunder shall be addressed to the following:

TO COUNTY: Miami-Dade County

TO VILLAGE: Village of Palmetto Bay

IN WITNESS WHEREOF, the VILLAGE and the COUNTY have set their hands the day and year first above written.

Attest:

HARVEY RUVIN, CLERK

By: _____
County Deputy Clerk

MIAMI-DADE COUNTY

By: _____
County Mayor

Approved as to form and legal sufficiency

By: _____
Assistant County Attorney

Attest:

By: _____
Missy Arocha, Village Clerk

(AFFIX VILLAGE SEAL)

VILLAGE OF PALMETTO BAY, a municipal corporation OF the STATE OF FLORIDA

By: _____
Edward Silva, Village Manager

Approved as to form and legal sufficiency:

By: _____
Dexter W. Lehtinen, Village Attorney

EXHIBIT "A"

RESOLUTION NO. 2016-69

A RESOLUTION OF THE MAYOR AND VILLAGE COUNCIL OF THE VILLAGE OF PALMETTO BAY, FLORIDA; RELATING TO AGREEMENTS; AUTHORIZING THE VILLAGE MANAGER TO EXECUTE AN INTERGOVERNMENTAL AGENCY AGREEMENT WITH MIAMI-DADE COUNTY, IN SUBSTANTIALLY THE ATTACHED FORM, TO PERFORM CERTAIN TRAFFIC ENGINEERING FUNCTIONS AND TO ALLOW THE VILLAGE OF PALMETTO BAY TO INSTALL AND MAINTAIN CERTAIN TRAFFIC CONTROL DEVICES AND SIGNS WITHIN LOCAL MUNICIPAL STREETS OPERATED AND MAINTAINED BY THE VILLAGE; AND PROVIDING FOR AN EFFECTIVE DATE. (Sponsored by Administration)

WHEREAS, Village of Palmetto Bay ("Village") residents are concerned about vehicles speeding and cut-through traffic traversing through their neighborhoods; therefore, desire to enter into an Intergovernmental Agreement with Miami-Dade County for the installation and maintenance of traffic calming devices; and

WHEREAS, the basis for the installation of traffic calming devices at a particular street will be based on the findings of a traffic study analysis, or by the decision of the Village Manager by a written finding that the installation of a traffic calming device is important for the preservation of the health and safety of affected residents; and

WHEREAS, Miami-Dade County, Florida, ("County") has exclusive jurisdiction over all traffic control devices in both, the incorporated and unincorporated areas of the County; and

WHEREAS, the Village is prohibited from installing and maintaining traffic calming devices, unless an Intergovernmental Agency Agreement with the County ("Intergovernmental Agreement"), is approved and executed in accordance with Section 2-96.1 County Code of Ordinances; and

WHEREAS, Village administration is respectfully requesting the Mayor and the Village Council of the Village of Palmetto Bay to authorize the Village Manager to enter into and execute an Intergovernmental Agency Agreement to perform engineering functions in order to proceed with installation and maintenance of traffic calming devices on local municipal streets operated and maintained by the Village; and,

WHEREAS, the Village Council finds that this Resolution authorizing execution of the Intergovernmental Agency Agreement is a crucial step in improving the flow of traffic and protecting the health, safety and welfare of residents affected by vehicles speeding and cut-through traffic traversing through the neighborhoods of the Village.

NOW, THEREFORE, BE IT RESOLVED BY THE MAYOR AND VILLAGE COUNCIL OF THE VILLAGE OF PALMETTO BAY, FLORIDA, AS FOLLOWS:

Section 1. **Recitals.** The above recitals are true and correct and are incorporated herein by this reference.

Section 2. **Approval of Agreement.** The Mayor and Village Council of the Village of Palmetto Bay hereby authorize the Village Manager to execute an Intergovernmental Agency Agreement with Miami Dade County, in substantially the form attached hereto as Exhibit "A", which will allow the Village to install and maintain traffic calming devices and signs within the local municipal streets operated and maintained by the Village.

Section 3. **Authorization of the Village Manager.** The Village Manager is authorized to take all action necessary to enter into an Intergovernmental Agency Agreement with Miami Dade County, in substantially the form attached hereto as Exhibit "A", to allow the Village to perform engineering functions that will allow the Village to install and maintain traffic calming devices and signs within the local municipal streets, in accordance with Section 2-96.1, Miami-Dade County Code of Ordinances.

Section 4. This Resolution shall become effective upon the date of its adoption herein.

PASSED and ADOPTED this 12th day of September, 2016.

Attest: _____
Missy Arocha
Village Clerk

_____
Eugene Flinn
Mayor

APPROVED AS TO FORM AND LEGAL SUFFICIENCY FOR THE USE AND RELIANCE OF THE VILLAGE OF PALMETTO BAY ONLY:

_____
Dexter W. Lehtinen
Village Attorney

FINAL VOTE AT ADOPTION:

Council Member Karyn Cunningham	YES
Council Member Tim Schaffer	YES
Council Member Larissa Siegel Lara	YES
Vice-Mayor John DuBois	YES
Mayor Eugene Flinn	YES

EXHIBIT "B"

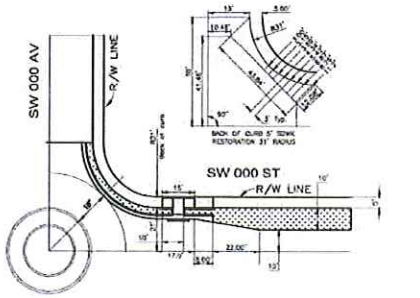

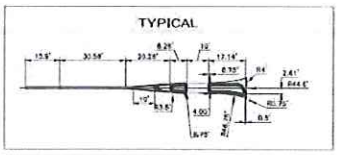

TYPE 'B' MEDIAN CURB

TYPE 'D' MEDIAN CURB

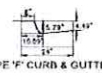

TYPE 'F' CURB & GUTTER

See Miami Dade County Public Works Manual, Standard Road Details: Curbing R 14.1 to R 14.6

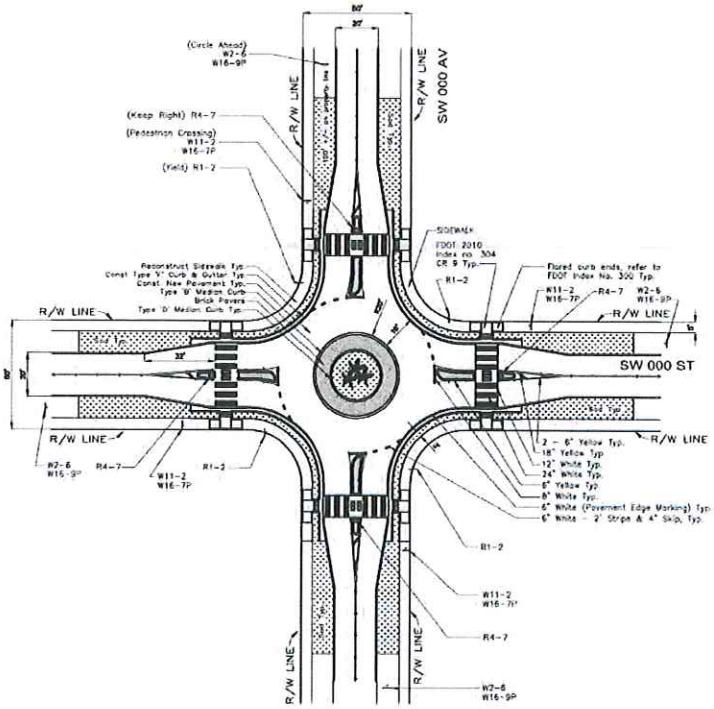

NOTE: TYPICAL PER FHWA ROUNDABOUT GUIDELINE, MINIMUM BUFFER BETWEEN BACK OF CURB AND FRONT OF SIDEWALK TO BE 2'.

ITEM NO.	DESCRIPTION	UNITS	QUANT	UNIT COST	TOTAL
102-1	MAINTENANCE OF TRAFFIC	W.D.	-	-	-
110-4-1-1	REMOVAL OF EXISTING PAVEMENT (Asphalt, concrete, sidewalk, curb & gutter)	S.Y.	-	-	-
160-4	ASPHALT BASE COURSE (Min. 8" thick in 3" lifts, includes excavation of roadway and 12" stabilization of subgrade)	S.Y.	-	-	-
334-2-13-1	ASPHALTIC CONCRETE (Type S, 1" thick)	Tons	-	-	-
520-2A	CONCRETE CURB AND GUTTER (Any type incl. Base Prep.)	L.F.	-	-	-
522-1(1)	CONCRETE SIDEWALK (4" thick 3000 PSI concrete at 28 days)	S.Y.	-	-	-
526-70-2B	BRICK PAVERS	S.Y.	-	-	-
575-1-1	SODDING (Paspalum Bahia or match existing sod, including watering)	S.Y.	-	-	-
580-4	PALMS CLUMP TYPE (8' TO 20' HT or clear trunk)	EA.	-	-	-
700-60-01	ROADSIDE SIGN (Including post & stripe 0-12 SF see plans)	EA.	-	-	-
706-1-12	REFLECTIVE PAVEMENT MARKER, PERMANENT	EA.	-	-	-
711-11-121	SOLID TRAFFIC STRIPE, THERMOPLASTIC (6" white)	L.F.	-	-	-
711-11-125	SOLID TRAFFIC STRIPE, THERMOPLASTIC (24" white)	L.F.	-	-	-
711-11-221	SOLID TRAFFIC STRIPE, THERMOPLASTIC (6" yellow)	L.F.	-	-	-
711-11-224	SOLID TRAFFIC STRIPE, THERMOPLASTIC (18" yellow)	L.F.	-	-	-
711-11-172	SOLID TRAFFIC STRIPE, THERMOPLASTIC (8" white)	L.F.	-	-	-
711-9	SKIP TRAFFIC STRIPE, THERMOPLASTIC (6" white)	L.F.	-	-	-
				TOTAL COST	-

TRAFFIC ENGINEERING CHECK OFF BOX			
TITLE	NAME	INITIAL	DATE

MIAMI-DADE DTPW

MIAMI-DADE COUNTY
DEPARTMENT OF TRANSPORTATION AND PUBLIC WORKS
TRAFFIC ENGINEERING DIVISION

PROJECT No. 20170026 | SHEET 1 OF 1

REV	DATE	DESCRIPTION	DESIGN	DESIGN	DATE
				J.F.	03/31/17

CIRCLE 50'-50'RW

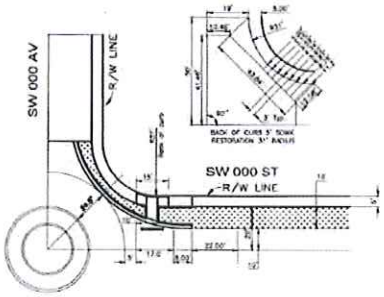

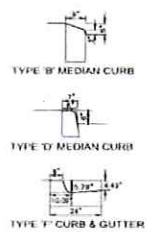

See Miami Dade County Public Works Manual, Standard Road Details: Curbing R 14.1 to R 14.6

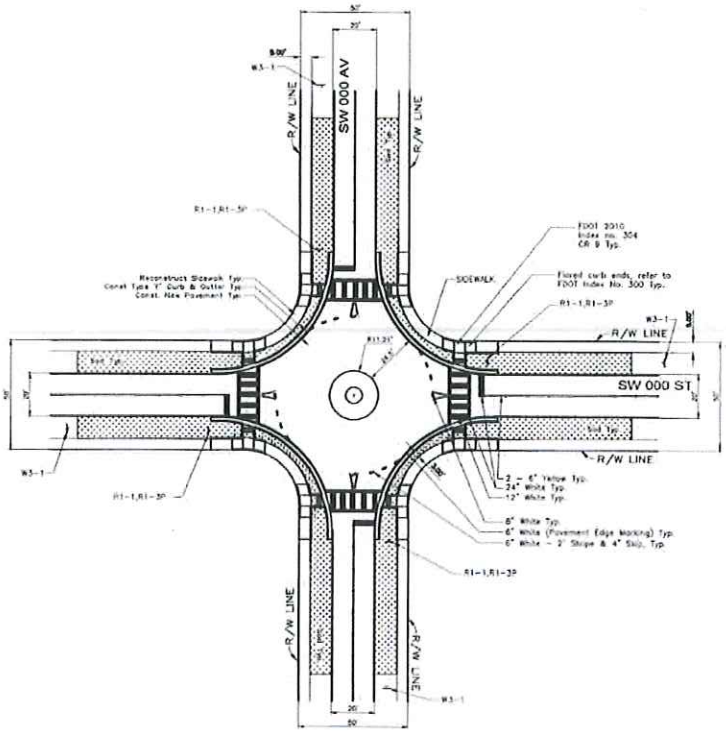

ITEM NO.	DESCRIPTION	UNITS	QUANT.	UNIT COST	TOTAL
122-1	MAINTENANCE OF TRAFFIC	W.O.	-	-	-
110-4-1-1	REMOVAL OF EXISTING PAVEMENT (Asphalt concrete, sidewalk, curb & gutter)	S.Y.	-	-	-
160-4	ASPHALT BASE COURSE (Min. 6" thick in 3" layers. Includes excavation of roadway and 12" stabilization of subgrade)	S.Y.	-	-	-
334-2-13-1	ASPHALTIC CONCRETE (Type S, 1" thick)	Tons	-	-	-
520-2A	CONCRETE CURB AND GUTTER (Any type incl. base Prep.)	L.F.	-	-	-
522-1(1)	CONCRETE SIDEWALK (4" thick 3000 PSI concrete at 28 days)	S.Y.	-	-	-
526-70-28	BRICK PAVERS	S.Y.	-	-	-
575-1-1	SODDING (Pensacola Bahia or match existing sod, including watering)	S.Y.	-	-	-
585-4	PALMS CLUMP TYPE (8' TO 20' HT or clear trunk)	EA.	-	-	-
700-40-01	ROADSIDE SIGN (Including post & strips 0-12 SF see plans)	EA.	-	-	-
706-1-12	REFLECTIVE PAVEMENT MARKER, PERMANENT	EA.	-	-	-
711-11-121	SOLID TRAFFIC STRIPE, THERMOPLASTIC (6" white)	L.F.	-	-	-
711-11-125	SOLID TRAFFIC STRIPE, THERMOPLASTIC (24" white)	L.F.	-	-	-
711-11-221	SOLID TRAFFIC STRIPE, THERMOPLASTIC (6" yellow)	L.F.	-	-	-
711-11-224	SOLID TRAFFIC STRIPE, THERMOPLASTIC (18" yellow)	L.F.	-	-	-
711-11-122	SOLID TRAFFIC STRIPE, THERMOPLASTIC (8" white)	L.F.	-	-	-
711-2	SKIP TRAFFIC STRIPE, THERMOPLASTIC (6" white)	L.F.	-	-	-
			TOTAL COST		-

TRAFFIC ENGINEERING CHECK OFF BOX

TITLE	NAME	INITIAL	DATE

MIAMI-DADE DTPW

MIAMI-DADE COUNTY
DEPARTMENT OF TRANSPORTATION AND PUBLIC WORKS
TRAFFIC ENGINEERING DIVISION

PROJECT No: 20170026 | SHEET 1 OF 1

REV	DATE	DESCRIPTION	DESIGN

CIRCLE 50'-50'RW
ALL WAY STOP

DESIGN	DATE
J.F.	03/31/17

EXHIBIT "C"

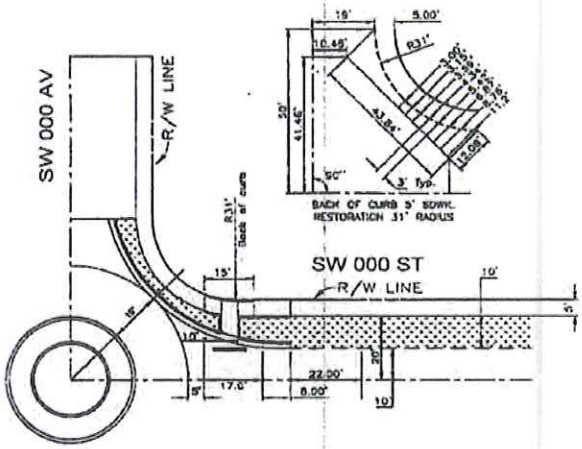

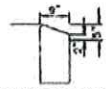

TYPE 'B' MEDIAN CURB

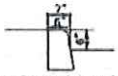

TYPE 'D' MEDIAN CURB

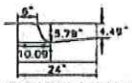

TYPE 'F' CURB & GUTTER

See Miami Dade County Public Works Manual, Standard Road Details: Curbing R 14.1 to R 14.6

Reconstruct Sidewalk
Const Type 'F' Curb & Gutter
Const. New Pavement

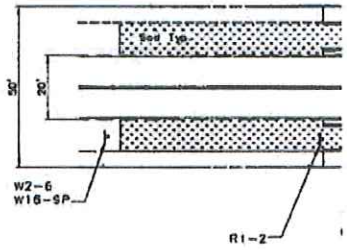

ITEM NO.	DESCRIPTION	UNITS	QUANT.	UNIT COST	TOTAL
102-1	MAINTENANCE OF TRAFFIC	W.D.	-	-	-
110-4-1-1	REMOVAL OF EXISTING PAVEMENT (Asphalt concrete, sidewalk, curb & gutter)	S.Y.	-	-	-
160-4	ASPHALT BASE COURSE (Min. 6" thick in 3" layers, includes excavation of roadway and 12" stabilization of subgrade)	S.Y.	-	-	-
334-2-13-1	ASPHALTIC CONCRETE (Type S.1" thick)	Tons	-	-	-
520-2A	CONCRETE CURB AND GUTTER (Any type incl. base Prep.)	L.F.	-	-	-
522-1(1)	CONCRETE SIDEWALK (4" thick 3000 PSI concrete at 28 days)	S.Y.	-	-	-
526-70-28	BRICK PAVERS	S.Y.	-	-	-
575-1-1	SODDING (Pensacola Bahia or match existing sod, including watering)	S.Y.	-	-	-
585-4	PALMS CLUMP TYPE (8' TO 20' HT or clear trunk)	EA.	-	-	-
700-40-01	ROADSIDE SIGN (Including post & straps 0-12 SF see plans)	EA.	-	-	-
705-1-12	REFLECTIVE PAVEMENT MARKER, PERMANENT	EA.	-	-	-
711-11-121	SOLID TRAFFIC STRIPE, THERMOPLASTIC (6" white)	L.F.	-	-	-
711-11-125	SOLID TRAFFIC STRIPE, THERMOPLASTIC (24" white)	L.F.	-	-	-
711-11-221	SOLID TRAFFIC STRIPE, THERMOPLASTIC (6" yellow)	L.F.	-	-	-
[illegible]	[illegible]	L.F.	-	-	-