DocuSign Envelope ID: 51379444-F074-4FFC-8D96-314C6D56866F

RESOLUTION NO. 2018-51

A RESOLUTION OF THE MAYOR AND VILLAGE COUNCIL OF THE VILLAGE OF PALMETTO BAY, FLORIDA, RELATING TO VILLAGE-WIDE TRAFFIC CALMING IMPROVEMENTS; AUTHORIZING THE VILLAGE MANAGER TO ENTER INTO A CONTRACT WITH THE CORRADINO GROUP, INC. TO PROVIDE RECOMMENDATIONS CONCERNING THE IMPLEMENTATION OF A TRAFFIC IMPACT FEE AS A FUNDING MECHANISM FOR FUTURE TRAFFIC CALMING PROJECTS; FURTHER AUTHORIZING THE VILLAGE MANAGER TO EXPEND BUDGETED FUNDS IN AN AMOUNT NOT TO EXCEED $40,000; AND PROVIDING AN EFFECTIVE DATE. *(Sponsored by Mayor Eugene Flinn)*

WHEREAS, in 2016, the Village Council adopted Resolution No. 2016-94 authorizing Marlin Engineering to develop a comprehensive traffic calming plan; and

WHEREAS, the Village Council approved the comprehensive traffic calming plan through the adoption of Resolution No. 2018-20; and

WHEREAS, the approved traffic plan provides for the efficient and safe movement of vehicles and pedestrians by optimizing the smooth flow of traffic throughout the Village while minimizing traffic congestion on our local roads; and

WHEREAS, the Village desires to hire a traffic consultant to recommend and implement a traffic impact fee to fund said improvements and identify various methods and timelines to ensure that the necessary funds will be available to implement the traffic calming projects and improvements; and

DocuSign Envelope ID: 51379444-F074-4FFC-8D96-314C6D56866F

WHEREAS, in the interest of time and in consideration of the of how traffic is affecting our quality of life, the Village wishes to move forward expeditiously to implement the traffic impact fee to fund traffic solutions.

NOW, THEREFORE, BE IT RESOLVED BY THE VILLAGE OF PALMETTO BAY, FLORIDA, THAT:

Section 1. The Village Manager is authorized to enter a contract with The Corradino Group, Inc. for an amount not to exceed $40,000 to make recommendations concerning the implementation of a traffic impact fee, inclusive of methods and timeline to ensure that future traffic calming projects have a dedicated revenue source, this shall include a funding mechanism for future traffic calming/internal transportation projects.

Section 2. This Resolution shall become effective upon approval.

PASSED and **ADOPTED** this 23rd day of April 2018.

Attest: DocuSigned by: Missy Arocha 6EDC21JE5E8C48C... DocuSigned by: 3B8854AD569F494...

Missy Arocha
Village Clerk

Eugene Flinn
Mayor

APPROVED AS TO FORM AND LEGAL SUFFICIENCY FOR THE USE AND RELIANCE OF THE VILLAGE OF PALMETTO BAY, FLORIDA ONLY:

DocuSigned by: Dexter W. Lehtinen 1B1D06E7132A45...

Dexter W. Lehtinen
Village Attorney

DocuSign Envelope ID: 51379444-F074-4FFC-8D96-314C6D56866F

FINAL VOTE AT ADOPTION:

Council Member Karyn Cunningham	YES
Council Member David Singer	YES
Council Member Larissa Siegel Lara	YES
Vice-Mayor John DuBois	ABSENT
Mayor Eugene Flinn	YES

EXHIBIT A

March 21, 2018

Mr. Ed Silva, Village Manager
Village of Palmetto Bay
9705 East Hibiscus Street
Palmetto Bay, Florida 33157

Subject: **VILLAGE OF PALMETTO BAY MOBILITY IMPACT FEE PROPOSED SCOPE OF WORK**

Understanding and Approach

It is understood that Palmetto Bay desires to mitigate the impacts that future growth will place on its mobility system by having future development contribute its fair share of the cost of system improvements. The Village recognizes that continued growth in the region strains on Village's transportation system with vehicular congestion that compromises the quality of life for its residents. To finance the improvements needed to address these impacts, a Mobility Impact Fee can be beneficial to:

- ensure the new development is paying its way and lessening the burden on tax payers;
- provide additional funds for transportation;
- help funds keep pace with rising costs;
- reduce the need for borrowing.

A well-developed fair impact fee must avoid the potential negatives associated with impact fees:

- general opposition to fee increases;
- that additional fees may dissuade new businesses;
- that Revenues are economically driven and dependent upon the amount of new development in the area. If economic growth slows, the revenues will decrease;
- impact on increasing land prices;
- does not provide for a stable stream of revenue since most impact fees are one-time levies which may not cover future costs of maintenance or repair.

The five key issues to developing a sustainable Mobility Impact Fee that enables the programming of mobility improvements without unduly burdening redevelopment are:

1. Accurately forecast the incremental effect of development on the Village's mobility systems;
2. Develop an accurate forecast of potential development with consideration of sensitivity to impact fees and market dynamics;
3. Develop a scalable program of multimodal improvements to address increased mobility demand;
4. Develop a fair share fee schedule that is proportional to the development's impact;
5. Attain community consensus to the value of the impact fee system.

To address each issue, this Mobility Impact Fee proposal includes five tasks.

Task 1: Baseline and Future System Utilization, Capacity and Level of Service

To accurately forecast the incremental effect of development on the Village's mobility systems; first a baseline must be identified, using existing traffic counts, transit ridership counts, and as available, bicycle and pedestrian counts. Standard engineering practice and accepted methodologies will be used that relate to Village's adopted level-of-service criteria to measure level of service by mode. For determining background growth (not cause by Village development), existing State, County and Village historical data will be used and extrapolated for projections of future utilization and levels-of-service. The impact of future development will be developed using standard and accepted methodologies (such as ITE Trips Generation Manual) and calibrated to the extent possible using local historic and current data as available. This will be done by utilizing the Miami Dade Transportation Planning Organizations, most recent Long-Range Transportation Plan (LRTP) projections for the current year, and the horizon year. A scenario analysis will be developed to forecast the demand on the mobility system for high, low, and average land development forecasts, based on adopted land use regulations.

Task 2: Future Development Forecast

To perform the scenario analysis of demand on the Mobility System in Task 1, five development scenarios will be identified:

1. existing development;
2. existing plus committed (and approved) development (E+C);
3. future development and E+C using "low market absorption" forecast;
4. future development and E+C using "high market absorption" forecast;

Each of the scenarios will be developed based on identified real-estate trends for high and low markets for residential and non-residential space. Based on each of the development scenarios, trip generation values will be determined based on the methodologies in Task 1, distributed according to the Miami-Dade 2040 Long Range Transportation Plan Directional Trip Distribution Report, and assigned to the roadway network to forecast roadway volumes. Mode splits will be applied for the existing development scenario according to accepted current mode splits. For future scenarios, Corradino will document potential improvements in transit, bike and pedestrian mode share according to anticipated service improvements, anticipated bike infrastructure and bike sharing resources, and anticipate land use regulation impacts on walk and transit mode shares.

Task 3: Multimodal Improvement Program / Mitigation Projects

To respond to the mobility demands identified in Task 2, Corradino will identify a program of multimodal improvements based quantitative analysis of modal capacity and utilization. The program will include projects organized by mode that are identified in the Village's Capital Improvement Program, as well as appropriate projects identified among the Village's Comprehensive Plan, development commitments, and applicable transportation plans, bicycle and pedestrian plans, and transit planning efforts. The cost of these projects will be totaled by mode, committed funding identified, and funding needs calculated.

The analysis will consider the total transportation system including the roads, sidewalks, bicycle facilities and transit systems as an integrated network that serves the community. This acknowledges that the future of mobility is not only reliant on roadway capacity, but also the ability to move

people as a sum of the capacity of each mode. This provides the ability to continue meet mobility demands and improve quality-of-life as the capacity of the built-out network is reached.

Task 4: Fee Structure and Ordinance

In Task 4, for each development scenario, the total cost of the projects for each mode will be divided by the total number of trips generated by each mode in the projected future growth scenario. This provides fairness not only to tie fees to the number of trips, but also to the type of trips, therefore providing an incentive to develop walkable and bike-friendly projects where the cost of the per-trip fees is expected to be lower. The resulting sum of modal trip fees will be the amount per trip that the Village may charge future development to implement these projects. This provides the "rational nexus" between the cost of the improvement and the proportionate size of the development, and also provides a dedicated source by mode.

Upon gaining consensus on the fee structure, an ordinance will be drafted that implements the mobility impact fees. This will be reviewed by the team's legal professionals to assure that it is sufficient for approval by the Village Council. The ordinance will define the operating procedures to be undertaken, including timing of the impact fee review in the permitting process, and performance of a multimodal mobility impact analysis.

Based on the ordinance, development applicants will mitigate their specific traffic impacts based on the multimodal mobility impact analysis, and contribute the appropriately calculated fee to the Village. The Village will place the fee in a mobility fund, which will be used only to fund multimodal mobility projects as they have been programmed and approved. A process will be defined to regularly update the multimodal mobility fund, and its per-trip-fee rates.

Task 5: Meetings and Engagement

To address the concerns of citizens and the development community, public engagement effort is necessary to educated stakeholders on the benefits of the mobility impact fee, and include their input in developing an impact fee that is inclusive, effective and accepted. Task 5 will include:

1. Meetings with the Village Administration, first to kick-off the project, and then every month to provide updates on the effort.
2. A workshop meeting to be held at Village Hall to provide information and hear input from the development community, individual community stakeholders.
3. Two public hearings to adopt the ordinance.

A 10% contingency is suggested for additional meetings as they arise and are authorized.

Cost and Duration

This project can be completed within 7 months if notice to proceed is in April. The study would be performed by August 1 for Staff review, and subsequent first and second reading of the ordinance for the September and October Village Council hearings.

The cost of the project would total to $46,700, based on the task breakdowns below:

Task 1:	Baseline and Future System Utilization, Capacity and Level of Service	$ 7,000
Task 2:	Future Development Forecast	$ 7,000
Task 3:	Multimodal Improvement Program / Mitigation Projects	$ 9,500
Task 4:	Fee Structure and Ordinance	$ 5,000
Task 5:	Meetings and Engagement	$ 5,000
Contingency (10%)		$ 3,350
		$36,850

Sincerely,

Joe M. Corradino
The Corradino Group, Inc.

EXHIBIT B

Village of Palmetto Bay | Villagewide Traffic Calming Study

Prepared For:
Village of Palmetto Bay

Prepared By:
MARLIN Engineering, Inc.
1700 NW 66th Avenue, Suite 106
Plantation, FL 33313

CONTENTS

1.0 INTRODUCTION 1
1.1 Study Area 1
1.2 Objectives and Approach 1
2.0 TRAFFIC CALMING ANALYSIS METHODOLOGY 4
2.1 General Requirements and Constraints 4
3.0 PUBLIC INVOLVEMENT 6
4.0 DATA COLLECTION 9
5.0 FIELD OBSERVATIONS 11
6.0 DATA ANALYSIS 21
7.0 TRAFFIC CALMING PLAN 26
7.1 Review of the Traffic Calming Measures 26
7.2 Develop of the Traffic Calming Plan 30
7.3 Preliminary Cost Estimate 33
7.4 Project Prioritization 33
8.0 CONCLUSIONS 34

LIST OF FIGURES

Figure 1. Study Area Location and Boundaries 3
Figure 2. Palmetto Bay - Resident's Concerns Summary 8
Figure 3. Traffic Data Locations 10
Figure 4. Existing Conditions - Zone 1 15
Figure 4. Existing Conditions - Zone 1 (Continued) 16
Figure 5. Existing Conditions - Zone 2 17
Figure 5. Existing Conditions - Zone 2 (Continued) 18
Figure 6. Existing Conditions - Zone 3 19
Figure 6. Existing Conditions - Zone 3 (Continued) 20
Figure 7. Travel Speed Evaluation 22
Figure 8. Traffic Volume Evaluation 23
Figure 9. Crash Evaluation 24
Figure 10. Segments Eligible for Traffic Calming Measures 25
Figure 11. Recommended Traffic Calming Plan Layout 32

LIST OF TABLES

Table 1. Traffic Calming Thresholds for speed and Volume 4
Table 2. Traffic Calming Thresholds for Number of Accidents 5
Table 3. Recommended Traffic Calming Plan. List of Improvements 31
Table 4. Preliminary Cost Estimates 33
Table 5. Prioritization of Recommended Improvements 34

APPENDIX

Appendix A – Survey Form/Sample of Residents Comment Cards
Appendix B – Raw Data
Appendix C – Intergovernmental Agency Agreement

1.0 INTRODUCTION

MARLIN Engineering Inc. (MARLIN) was retained by the Village of Palmetto Bay to evaluate the local speed, volume, crash occurrence and overall traffic patterns to determine locations within the Village where traffic calming measures should be recommended. Based on the analysis of traffic conditions, MARLIN will developed a Village-wide Traffic Calming Master Plan incorporating traffic calming measures for roadway segments that met the threshold values stablished for the Village of Palmetto Bay in agreement with Miami-Dade County's Department of Transportation and Public Works (DTPW).

1.1 Study Area

The Village of Palmetto Bay is a municipality within the limits of Miami-Dade County. It is bounded by SR 5/US1/South Dixie Highway to the west, SW 184th Street to the south, SW 136th Street to the north extending to Biscayne Bay and the City of Coral Gables to the east.

For the purpose of this study in consideration of the geography of the Village and differences in land-use and traffic characteristics, the area was divided into three zones as follow:

Zone 1: North of SW 152nd Street and south of SW 136th Street, east of SR 5/US1/South Dixie Highway and west of City of Coral Gables.

Zone 2: North of SW 168th Street and south of SW 152nd Street, east of SR 5/US1/South Dixie Highway and west of Biscayne Bay.

Zone 3: North of SW 184th Street and south of SW 168th Street, east of SR 5/US1/South Dixie Highway Southbound and west of Biscayne Bay.

Detailed map with the Village limits and described zones is shown in **Figure 1**.

1.2 Objectives and Approach

Based on input from Village residents, the major traffic issues are excessive speeding, volume, and safety. The objective of this Traffic Calming Study is to address these concerns at critical locations to reduce the effects of motor vehicles on the residential neighborhoods, promote pedestrian and bicycle use and increase the quality of life throughout the Village.

The following steps were followed to meet these objectives:

- Meet with residents to obtain input on issues and areas of concern
- Review and consolidate concerns
- Determine critical locations within the study area

- Perform traffic data collection
- Perform traffic calming analysis
- Develop preliminary recommendations for City review
- Present study results to Miami-Dade County for approval

[Space left blank intentionally.]

Figure 1. Study Area Location and Boundaries

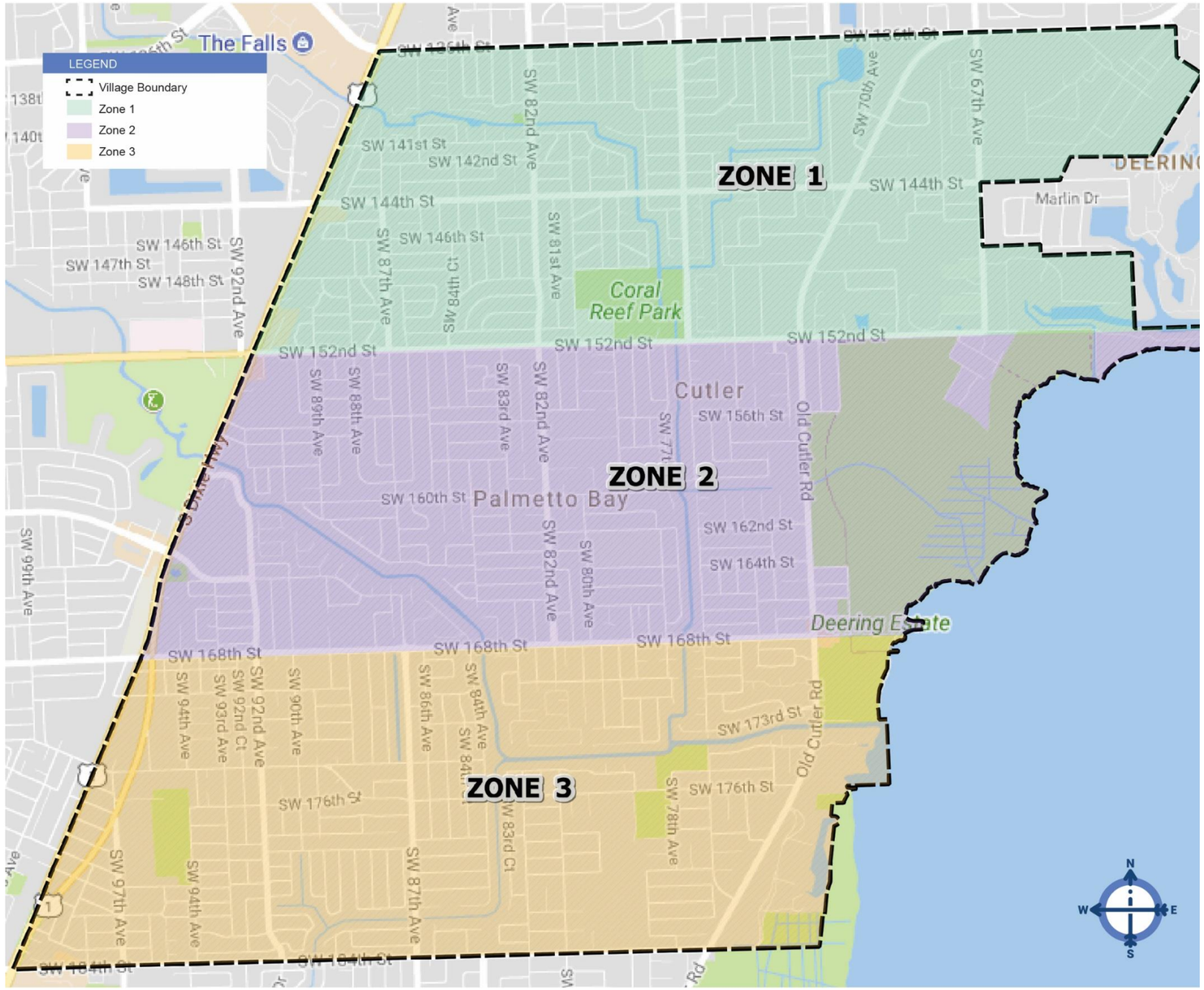

2.0 TRAFFIC CALMING ANALYSIS METHODOLOGY

The methodology and criteria defined in this study are described below as per agreement between the Village of Palmetto Bay and Miami-Dade County. The Village opted to use the City of Miami Beach Traffic Calming Manual which was previously approved by Miami-Dade County's Department of Transportation and Public Works (DTPW). In addition, an Intergovernmental Agency Agreement, presented in **Appendix C**, was signed between Miami-Dade County and the Village of Palmetto Bay enabling the Village to perform traffic functions, install and maintain traffic calming devices.

2.1 General Requirements and Constraints

Speed and traffic volumes are the first criteria used to gauge whether a traffic calming study area warrants further research for possible development and implementation of a traffic calming plan. **Table 1** shows the thresholds established for Palmetto Bay regarding speed and volume and points assigned to each range.

Table 1. Traffic Calming Thresholds for speed and Volume

Points	Speed*(mph)	Points	Volume (vpd) **
0.5	< 4.6	0.5	500 – 750
1.0	4.6 to 7.5	1.0	751 – 1,100
1.5	7.6 to 10.5	1.5	1,101 – 1,700
2.0	10.6 to 13.5	2.0	1,701 – 2,300
2.5	13.6 to 16.5	2.5	> 2,300
3.0	> 16.5 mph		

* 85th percentile speed is above the posted speed limit. The 85'"percentile speed is defined as "the speed that is exceeded by 15% of the motorist surveyed".

** Vehicles per Day

The second criterion, as shown in Table 2, establishes the number of accidents per year on the village streets as a warrant for traffic calming eligibility. Crash data for the last 3 years (2014 to 2016) of available data was analyzed and points assigned.

Table 2. Traffic Calming Thresholds for Number of Accidents

Point	No. of Accidents
0.5	1 - 2
1.0	= 3
1.5	> 3

i. Any street that ranks 2.5 points or higher as a sum of both criteria is eligible for traffic calming. Finally, a neighborhood street would also require 2/3 voter approval from residents, and implementation is subject to final roadway design. The County requires 100% approval from property owners adjacent to the proposed site where speed humps as well as other calming devices will be installed. Due to the curvature of the roadway, and other unique design characteristics, some streets may not be suitable for any or all of the traffic calming tools available.

ii. Any street that ranks 2.0 points will be studied by the Village's Transportation Engineer to determine if other measures may be helpful in addressing concern.

The following items may be considered, but not limited, as part of the study:

1. Location of school, pedestrian oriented facility (e.g. elderly housing) or community facility (e.g. park) located on the subject street or within an established walking area.
2. Driveway density.
3. Presence / absence of sidewalks.

After review of the above study, the Village's Transportation Engineer would be able to recommend various alternate solutions if the street does not fully qualify for the installation of traffic calming devices.

iii. Any street that scores less than a 2.0 and is determined to not be an appropriate location based on the study completed will not be eligible for re-evaluation for twelve (12) months after the speed/volume study is conducted. After two (2) years of testing, if the street does not qualify for traffic calming, the project is ineligible for re-testing for twenty-four (24) months.

In addition to the listed operational criteria, the following restrictions are also imposed:

- Roadway shall be local residential streets and generic residential collectors.
- The posted speed limit may not be more than 30 mph (local residential streets) or 35 mph (residential collectors).

- Roadway shall be local residential streets with only two lanes of travel.
- Roadway shall not be used as a primary route for emergency or fire rescue vehicles.
- Roadway shall not have curves or obstacles that would create an unsafe condition for motorists driving at the desired speed limit under normal driving conditions.
- Roadway shall not be a through truck route, unless an acceptable alternative route is identified.
- Pedestrians and/or bicycles safety shall not be adversely affected.
- Roadway drainage shall not be adversely affected.

3.0 PUBLIC INVOLVEMENT

The objective of the public involvement task is to discuss and receive the input from the residents of the Village. Therefore, the Village's Administration with the support of MARLIN provided a set of platforms for residents to express their concerns about traffic issues within their neighborhoods. The following public feedback alternatives were available for the residents:

- Public Meetings
- Comment Cards
- Online Surveys
- E-mails

The most significant input was received through the "Kick-off" and "Follow up" public meetings organized for each one of the designated zones. During the Kick-off meetings, residents were able to interact with Marlin's staff of engineers and planners which presented the Traffic Calming Study Plan and collected information about traffic issues pointed out by the residents. The follow up meetings provided a second opportunity for direct communication and feedback on the status of the study, as well as showing preliminary results from the data collection process. Afterwards, a Final Workshop was held at the Village Hall, where the Traffic Calming Master Plan was presented to the residents with a Presentation and Open Discussion format.

Public Involvement Meeting Snapshots. Residents interacting with Village's Administration/Councils Members and Engineers.

The Public Involvement meetings were hold on the following dates:

Kick-off Meetings	Follow up Meetings
Zone 1 – December 12th, 2016	Zone 1 – April 4th, 2017
Zone 2 – December 15th, 2016	Zone 2 – April 18th, 2017
Zone 3 – December 20th, 2016	Zone 3 – April 11th, 2017

Final Workshop July 5th, 2017

More than 2000 resident concerns were collected through the public feedback options. A sample of the issues offered by the residents include:

- Speeding vehicles, honking horns, unable to back out of my driveway during rush hours. (SW 180th street and SW 94th Avenue).
- Speed humps needed on SW 94th Avenue next to Palmetto Bay Park.
- Children cannot safely walk to school or the Coral Reef Park. Any intervention on SW 80th Avenue or on the intersection of SW 80th Avenue and SW 152nd Street to make it safer would be welcomed.
- Very concerned about speed on SW 174th Street west of Old Cutler Road. It would be good to have speed humps.

- Volume of traffic has increased as well as speeding. This is dangerous where we have kids. (SW 147th Court at SW 74th Avenue)
- Way too much volume for a residential street (Farmer Road). Most cars speed down the street and it has become a safety factor.
- SW 72nd Avenue between SW 152nd Street and SW 156th Street, make it a bike boulevard.
- General residents concerned about speeding and volume along:
  - SW 87th Avenue
  - SW 82nd Avenue
  - SW 77th Avenue
- Create more greenways throughout the Village.
- The road block on SW 94th Avenue has caused dramatic traffic increase on SW 93rd Avenue.

Figure 2, presents the distribution of the major concerns expressed by the residents by percent.

Figure 2. Palmetto Bay - Resident's Concerns Summary

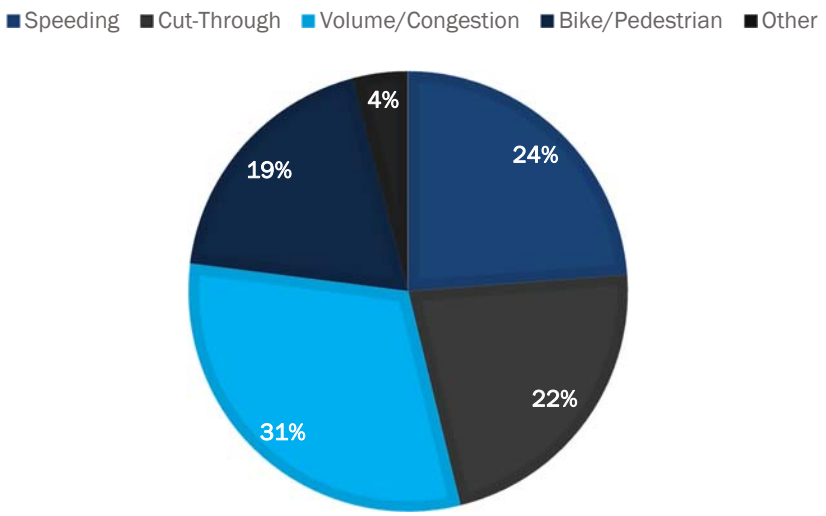

Examples of the residents comment cards are included in **Appendix A**. All comment cards can be found at the request of the village administration.

All input received from the residents, along with the previous information collected by the Village's Administration, was processed and summarized to identify patterns throughout the Village. This information was utilized during the analysis of the traffic data and the development of recommendations.

4.0 DATA COLLECTION

Based on the study objectives, a comprehensive range of traffic data collection was performed as part of the study. The following data was gathered:

- 85th Percentile Speed
- 24-Hour Average Daily Traffic
- Crashes within the village limits

Data collection was perform utilizing Automatic Traffic Recorder (ATRs) and locations were chosen considering the following premises:

- Residents Input
- Town Administration Advice
- Traffic Flow Throughout the Town
- Historical Traffic Data

Speed and traffic volumes were collected at 167 locations throughout the Village on typical weekdays (Tuesday, Wednesday and Thursday). During the data collection process, off school and holiday periods were avoided to ensure the data reflects typical traffic operation and behavior.

The available crash data for the 3 most recent years (2014-2016) was obtained and processed to identify the crashes per segment within the Village neighborhoods. Only crashes reported on streets (excluding crashes located in parking lots) were considered for the analysis. The crash data was obtained from Signal Four Analytics, a web-based database specifically designed for crash data analysis developed by the University of Florida and funded by the state of Florida.

Figure 3 presents a detailed map showing the locations were traffic data was collected (speed and volume). The raw 24-hour traffic volume counts, raw speed data and the amount of crashes per segment are included in **Appendix B**.

Figure 3. Traffic Data Locations

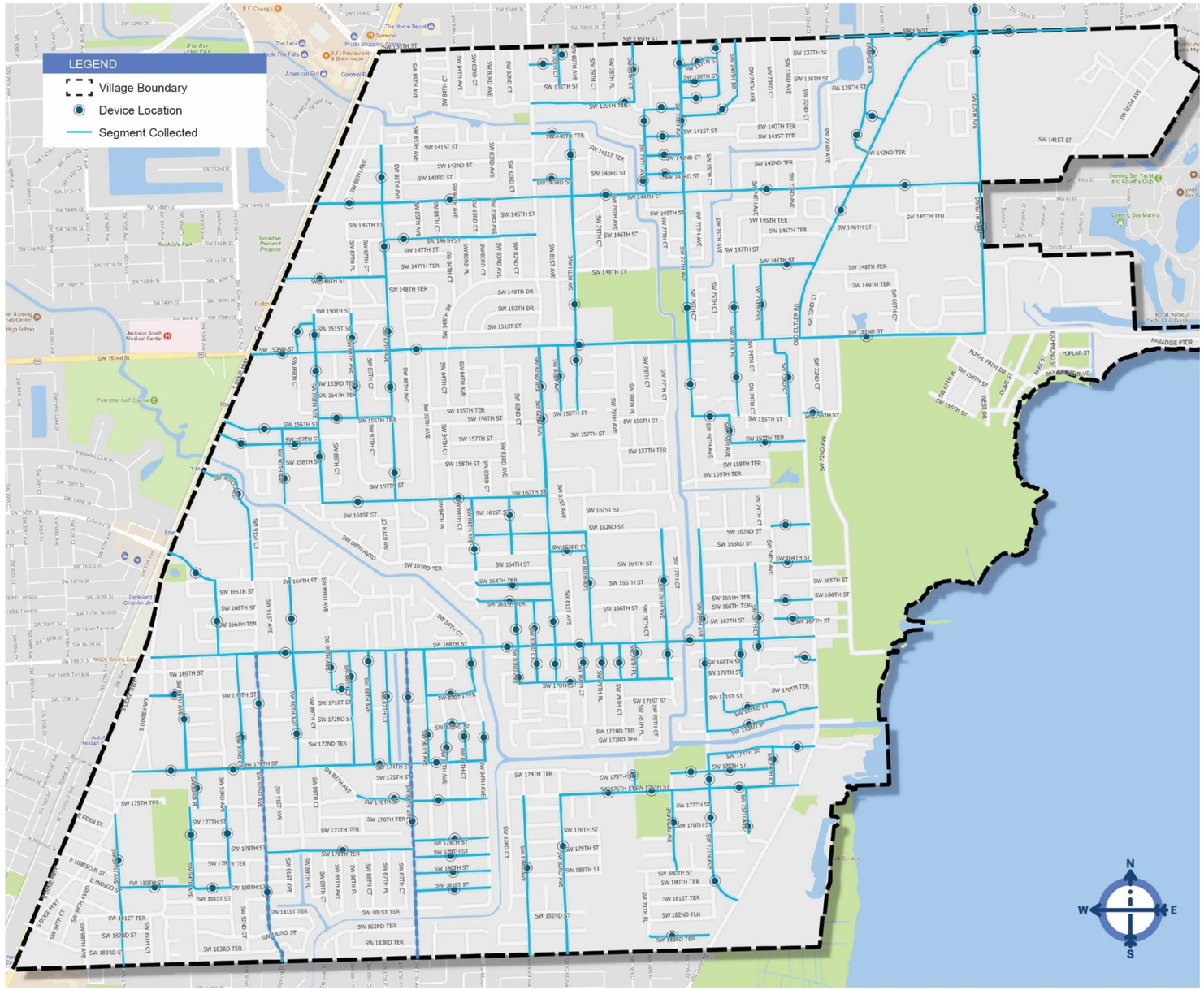

5.0 FIELD OBSERVATIONS

Field reviews were performed to evaluate existing traffic characteristics of the neighborhoods and to determine the locations where existing traffic calming devices are already installed throughout the Village. Special emphasis was made to observe segments identified by the residents and near sensitive locations like schools, parks and other high pedestrian generators.

Specific notes from observations made in the field are presented as follow:

As part of the Village's Administration efforts to address traffic issues, existing traffic calming measures were found and documented throughout the village.

Speed humps were observed at several locations. These countermeasures, as well as speed tables, are proven to be very effective in slowing traffic down.

SW 162nd Street west of SW 74th Avenue

Speed table located on a residential street.

SW 92nd Avenue north of SW 176th Street

As part of the previous traffic calming initiatives, mid-block medians were installed at different locations.

SW 164th Street west of SW 88th Court

Bicyclists and pedestrians are a very important concern among the residents as they are one of the most vulnerable road users and there is an increasing utilization of the Village's local streets for these activities. Relatively high pedestrian and bicyclist activity was observed within the Village's limits. As sidewalks are often missing on the residential streets, roadways are frequently used by the residents to walk or bike.

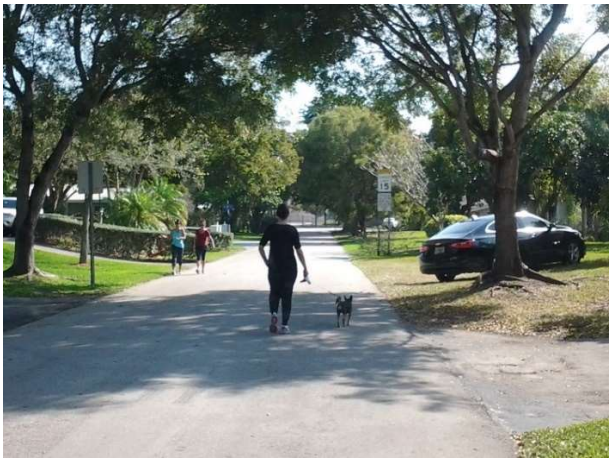

Pedestrians using the residential streets for their routine walks.

Bicycles sharing streets with regular vehicle traffic.

SW 67th Avenue north of SW 152nd Street

Schools are traffic generators during specific hours of the day. Standard signing and pavement markings for school zones help to reduce the traffic impact. Other initiatives can make a real difference on managing the traffic flow and distributing the volume during drop off /pick up periods as shown in the pictures below.

Signage indicating no traffic permitted in southbound direction during school drop off /pick up hours.

SW 80th Avenue at SW 162nd Street.

Long and wide stretches of roadway were observed to encourage drivers to travel at higher speeds.

SW 146th Street east of SW 87th Avenue

Heavy congestion during PM peak hours at the westbound approach.

SW 152nd Street east of US1

An inventory of existing conditions showing currently installed traffic calming devices, as well as other roadways characteristics, is depicted in **Figures 4 to 6**.

Figure 4. Existing Conditions - Zone 1

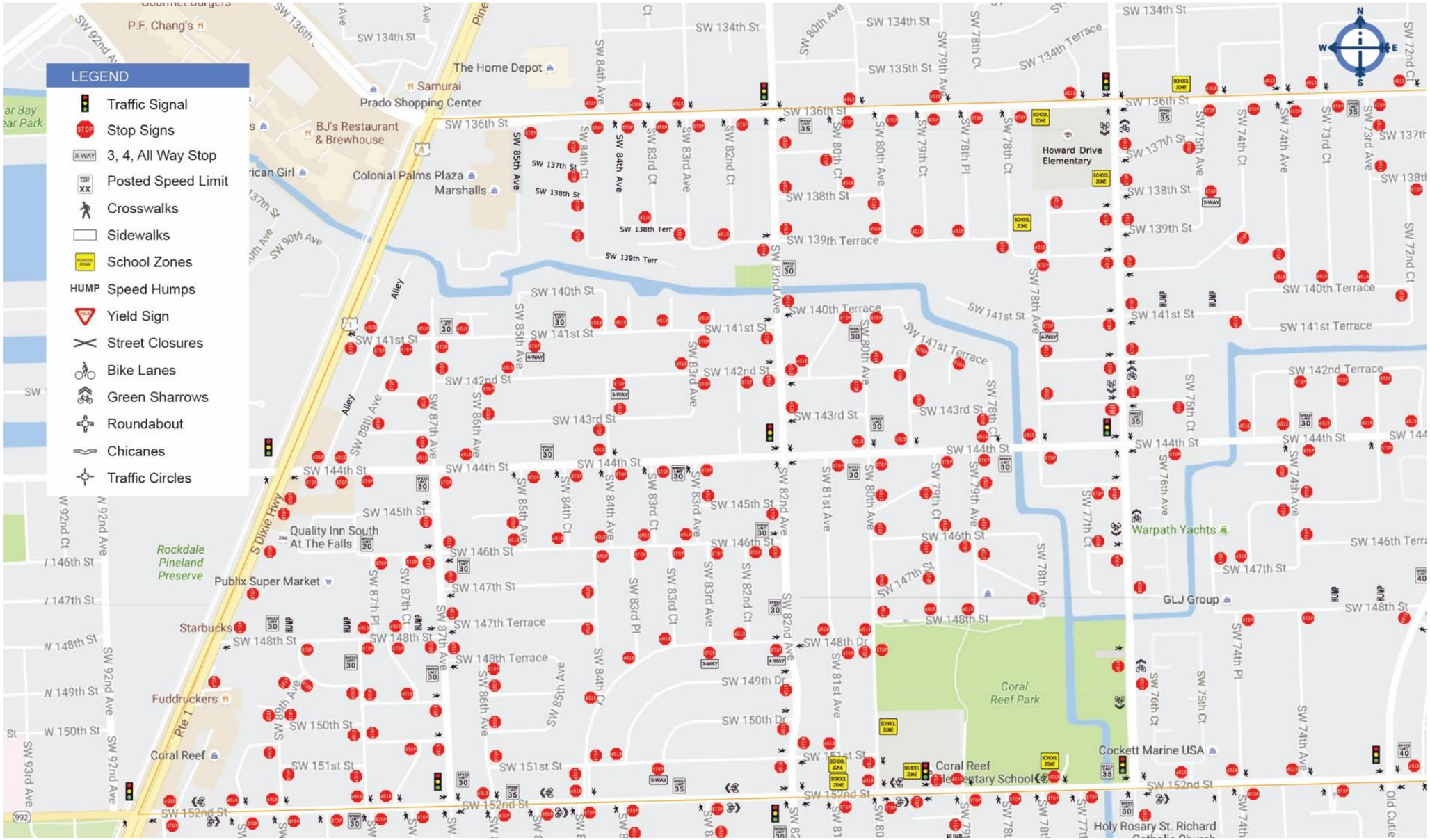

Figure 4. Existing Conditions - Zone 1 (continued)

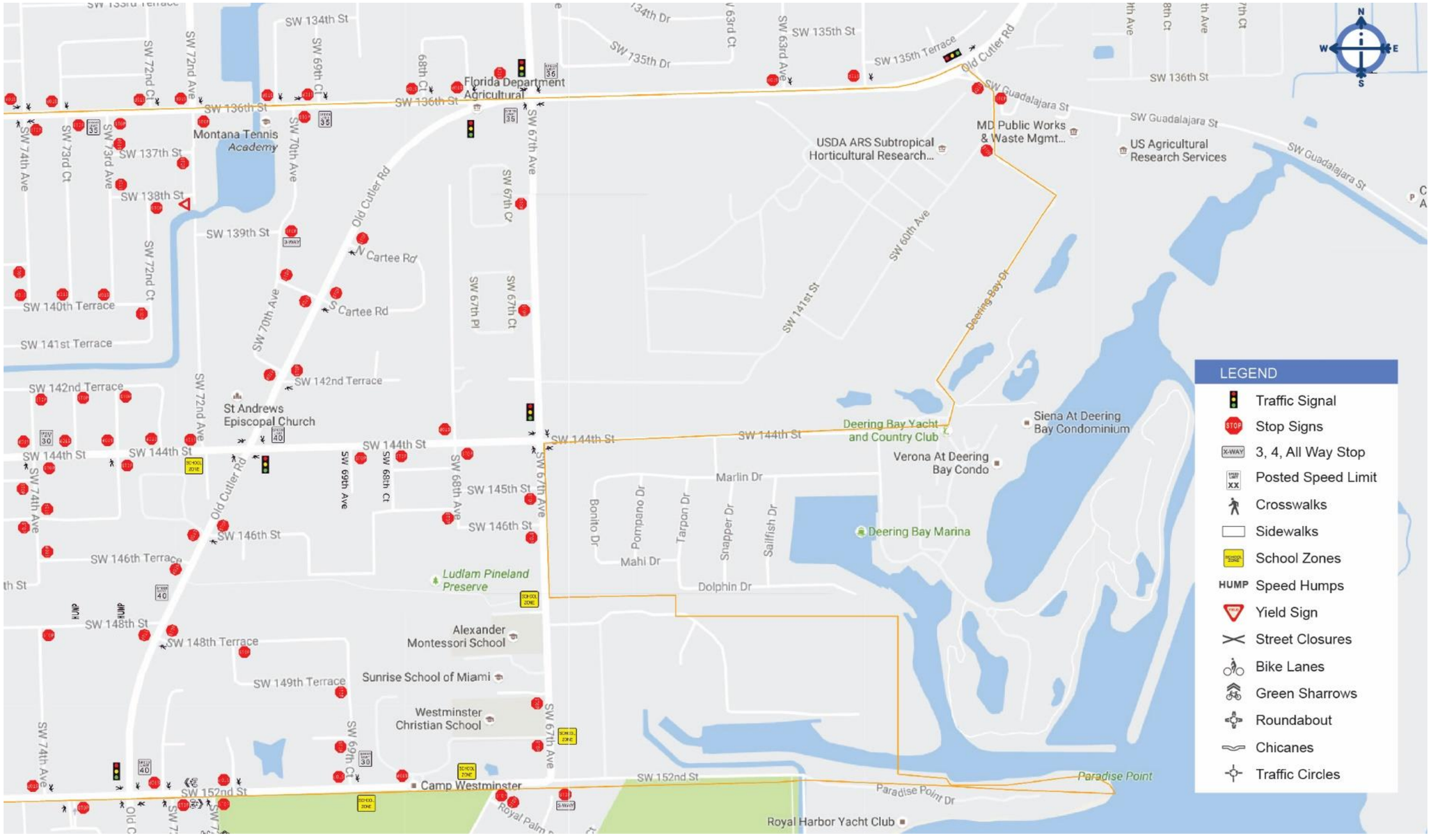

Figure 5. Existing Conditions - Zone 2

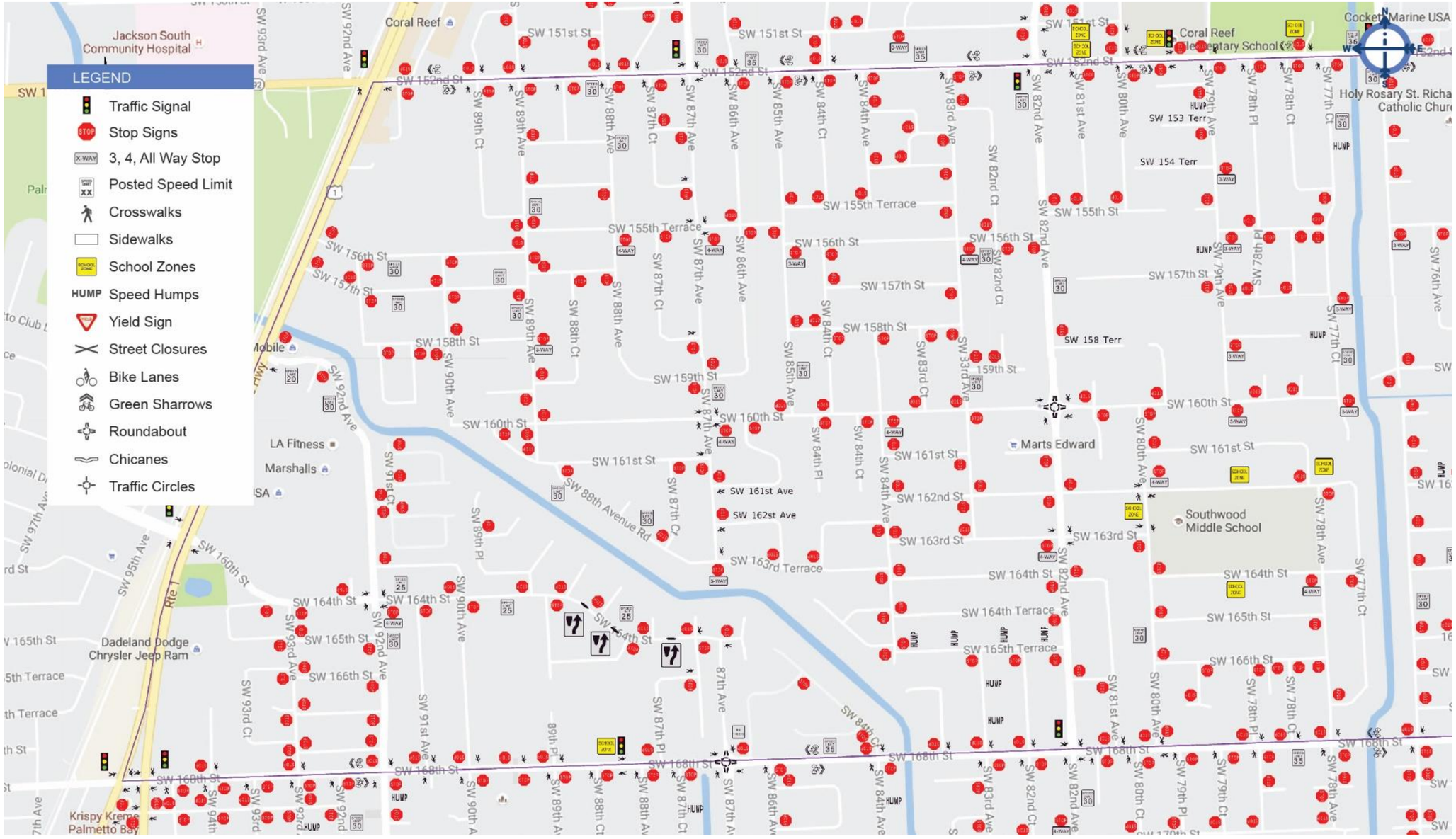

Figure 5. Existing Conditions - Zone 2 (continued)

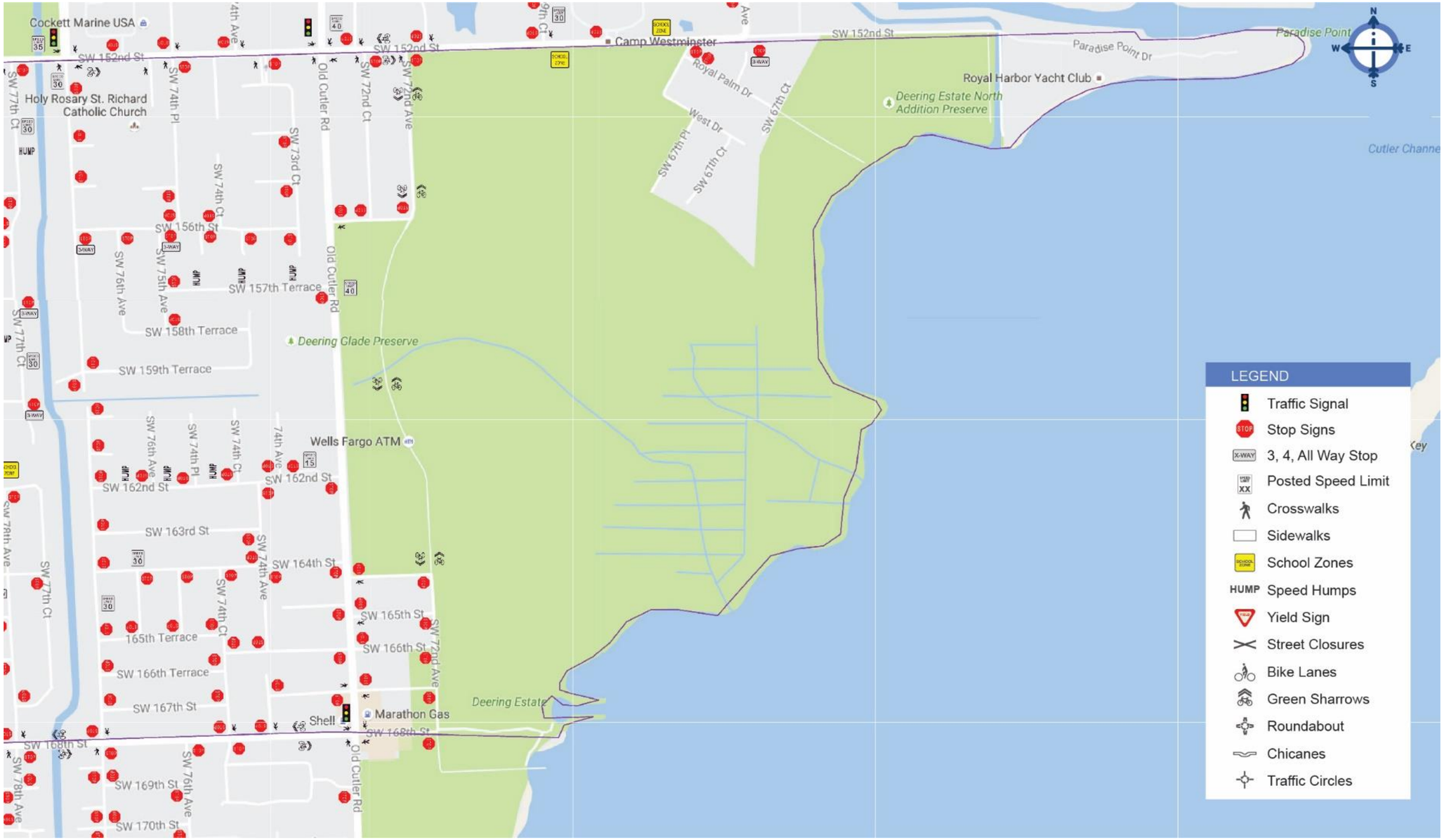

Figure 6. Existing Conditions - Zone 3

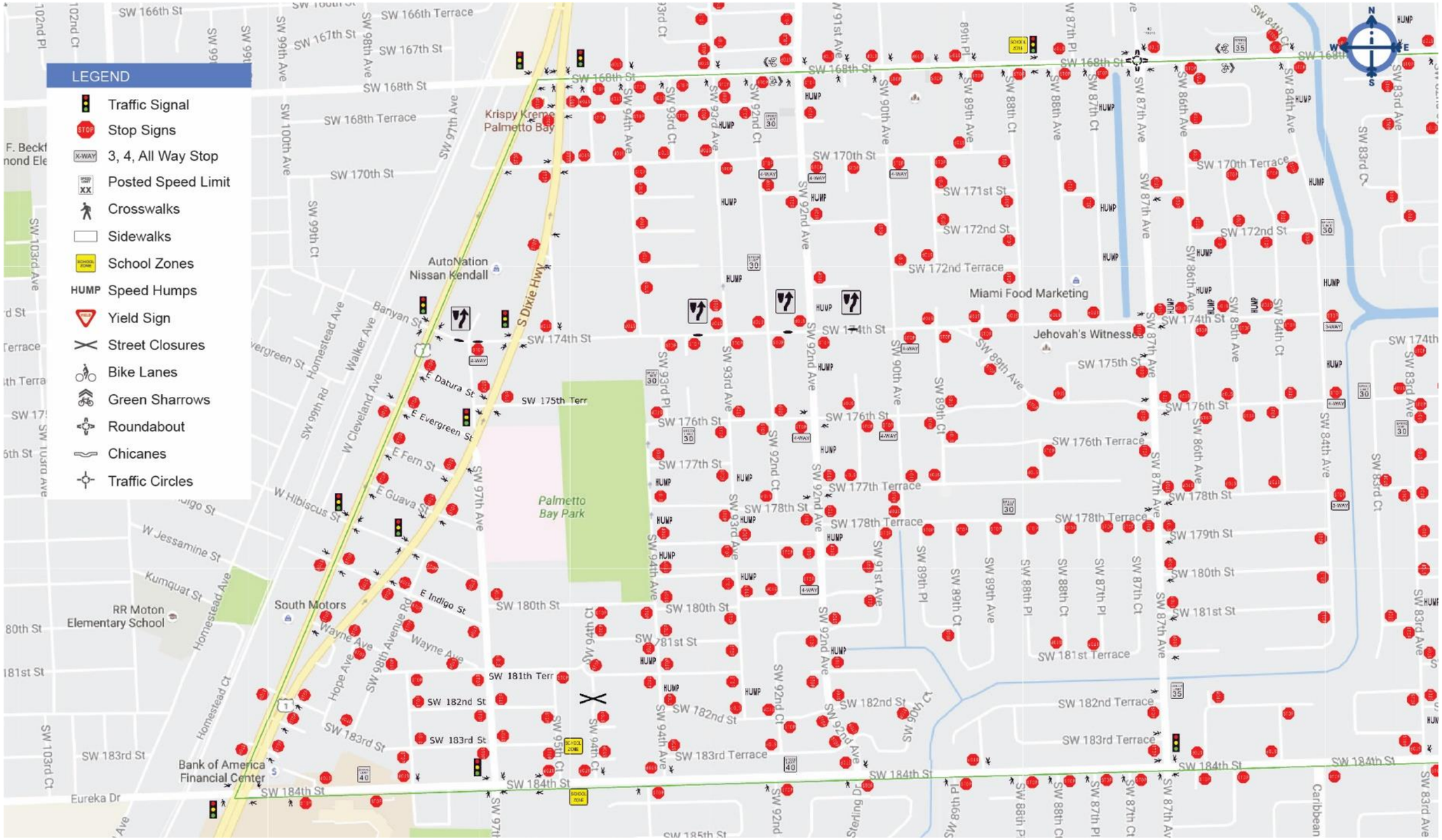

Figure 6. Existing Conditions - Zone 3 (continued)

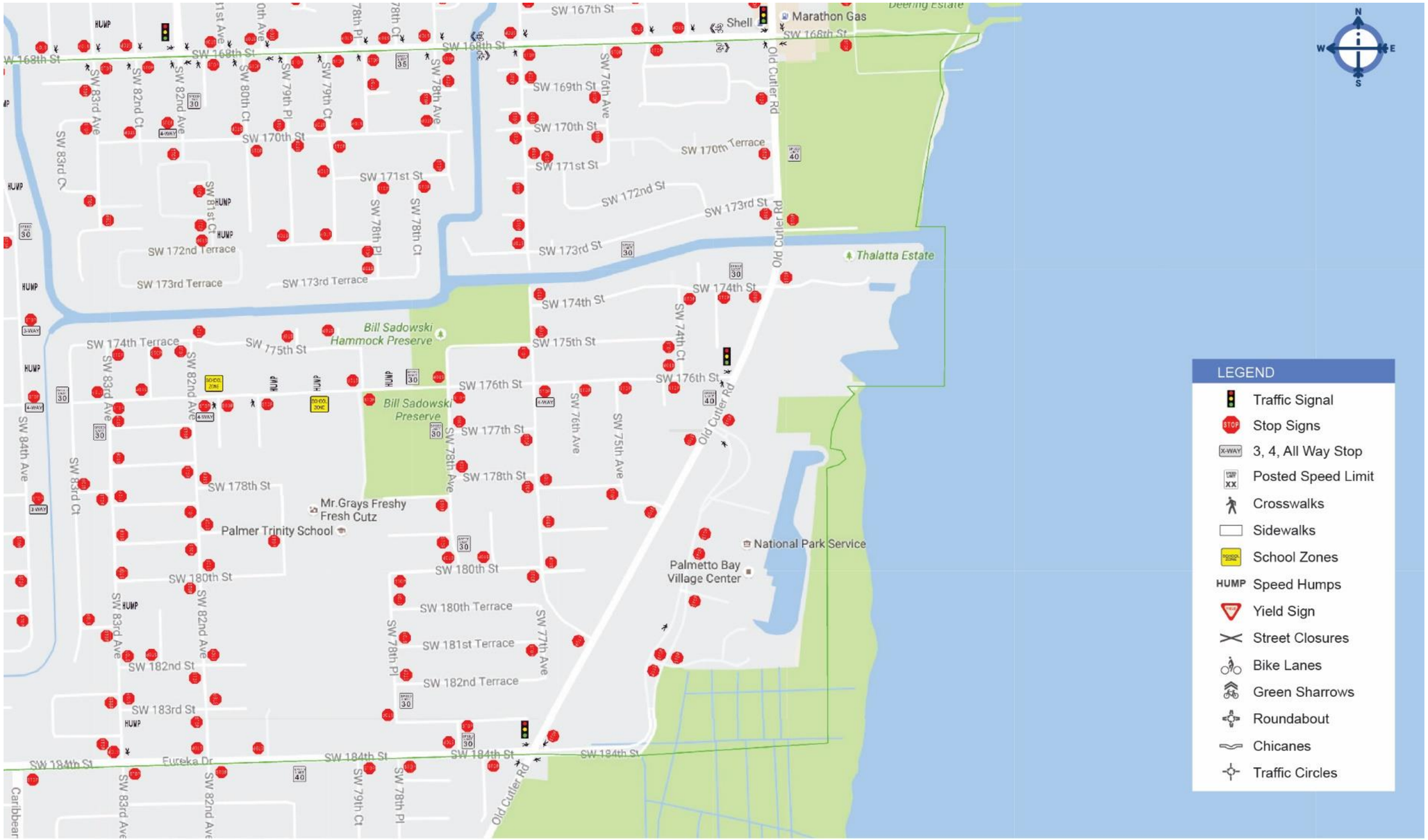

6.0 DATA ANALYSIS

The purpose of the data analysis is to identify locations within the study area where existing traffic conditions could warrant traffic calming improvements based on the threshold values stablished for the Village of Palmetto Bay in agreement with Miami-Dade County DTPW. Speed, volume and crash issues were plotted on the study area based on the established criteria referenced in section 2.1 and are presented in **Figures 7, 8 and 9**.

The Village's street network was analyzed and classified as "Eligible", "To be considered" or "Non Eligible" for traffic calming improvements. Segments that were found "Eligible" or "To be Considered", are depicted in **Figure 10**.

The results shown in Figure 10 indicate many streets in the Village are eligible for traffic calming applications. Section 7 presents recommendations to address predominant issues on these segments.

[Space left blank intentionally.]

Figure 7. Travel Speed Evaluation

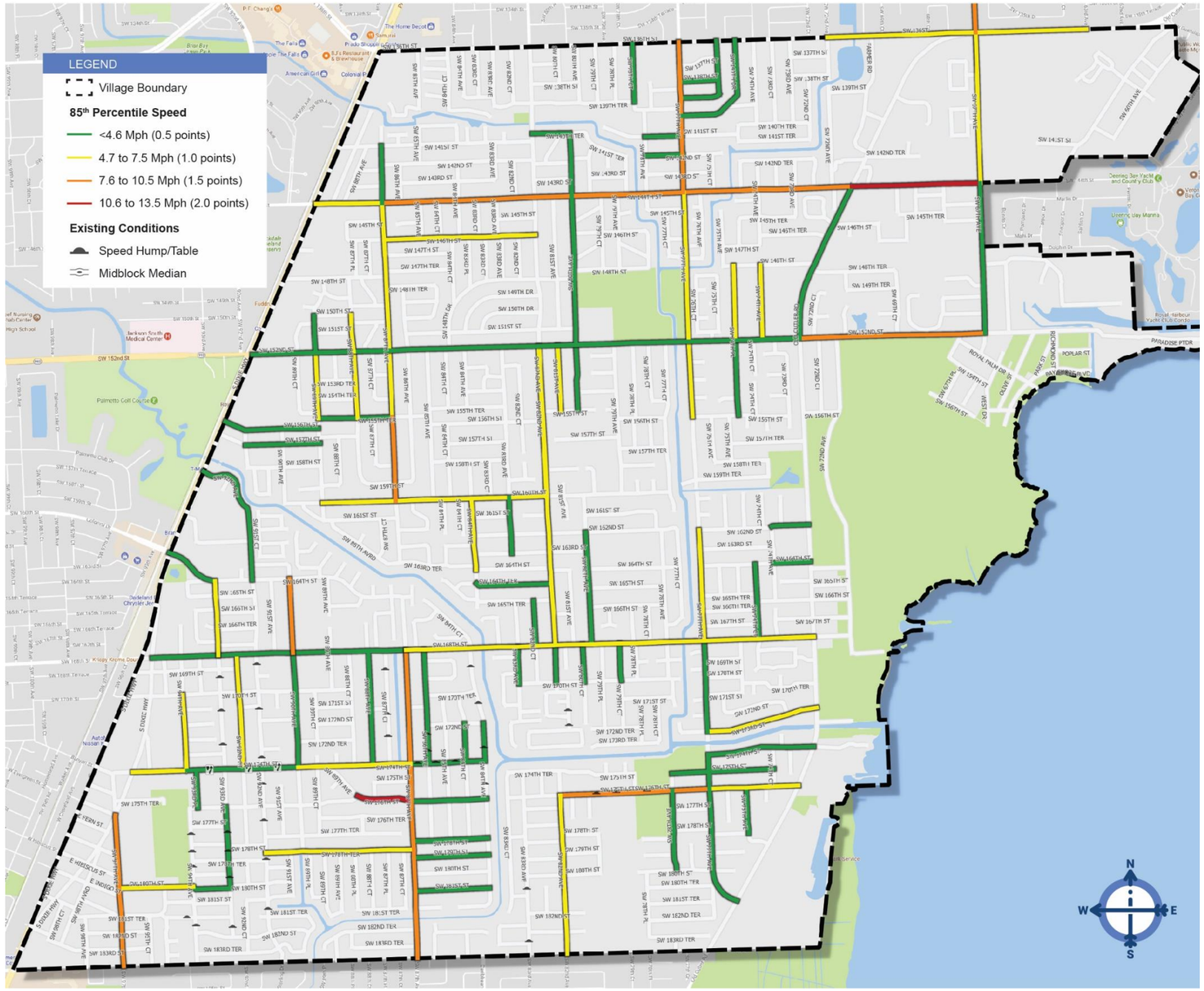

Figure 8. Traffic Volume Evaluation

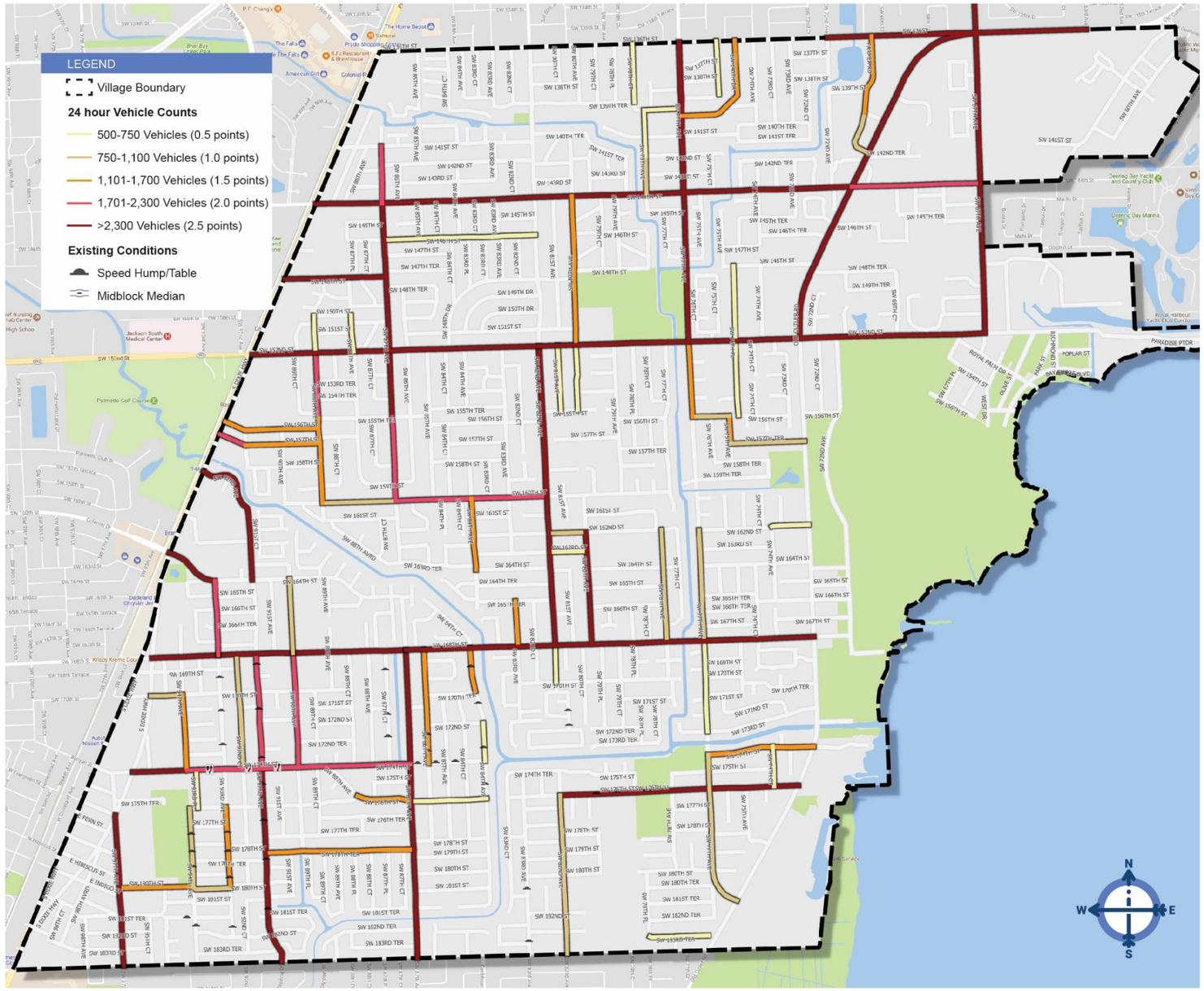

Figure 9. Crash Evaluation

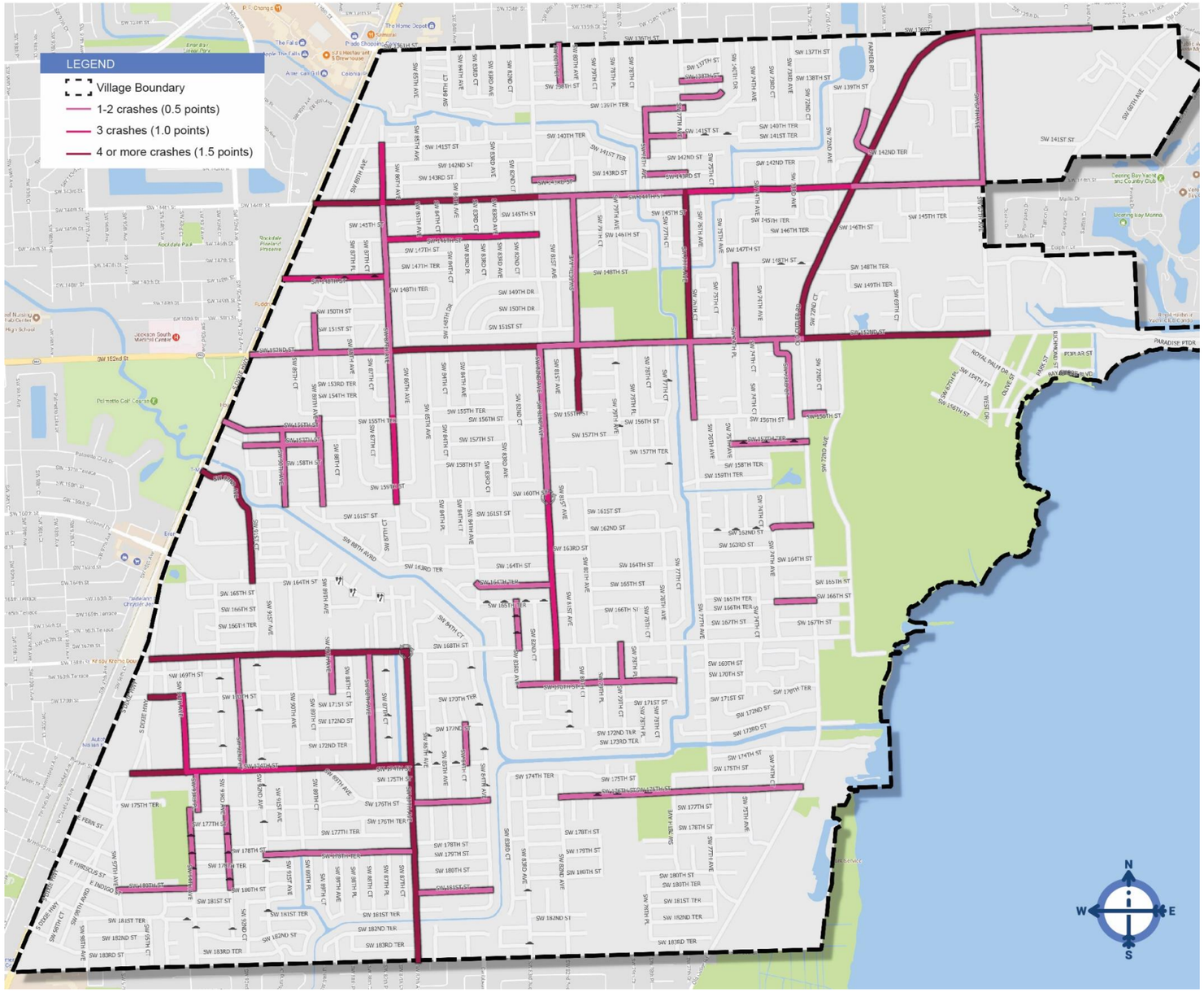

Figure 10. Segments Eligible for Traffic Calming Measures

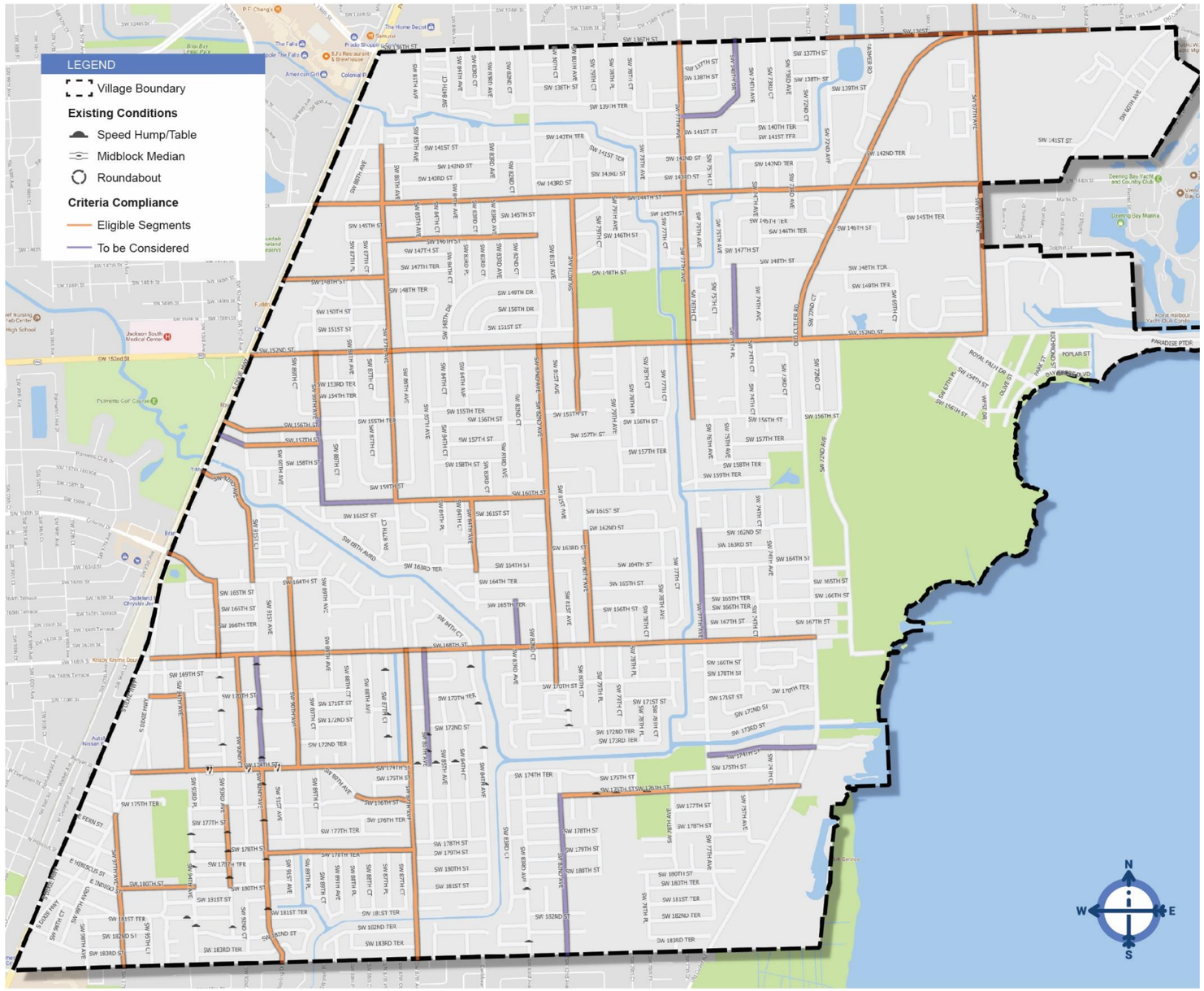

7.0 TRAFFIC CALMING PLAN

7.1 Review of the Traffic Calming Measures

The traffic analysis performed in section 6.0 indicates that many locations throughout the Village meet the threshold values for traffic calming applicants. A description of the potential traffic calming measures to be implemented is presented below including the advantages and disadvantages of each type of enhancement.

Roundabout

Circular raised island located at intersections which reduces speed at approaches and through the intersection. Traffic flows move around the island in a counter-clockwise direction. Circulating vehicles have the right of way. Deflector islands are installed on approaches. Roundabout size range from 25' to 70'.

Advantages:

- Reduces traffic speed (typically designed to accommodate traffic speeds of 15 to 25 mph)
- Significantly reduces severity of intersection collisions
- Increase opportunity for landscaping
- Particularly effective at multi-leg/odd shaped intersections and helps improve traffic operations
- Reduces noise impacts from stop signs and vehicle acceleration

Disadvantages:

- Requires safety and directional signs
- May cause the loss of some parking spaces near the intersection
- Reduces response times for emergency vehicles
- May have Right of way impacts

Speed hump

A raised surface on the roadway that is typically 3 to 4 inches in height, and 12 to 20 feet in length. These measures are mostly located at midblock locations.

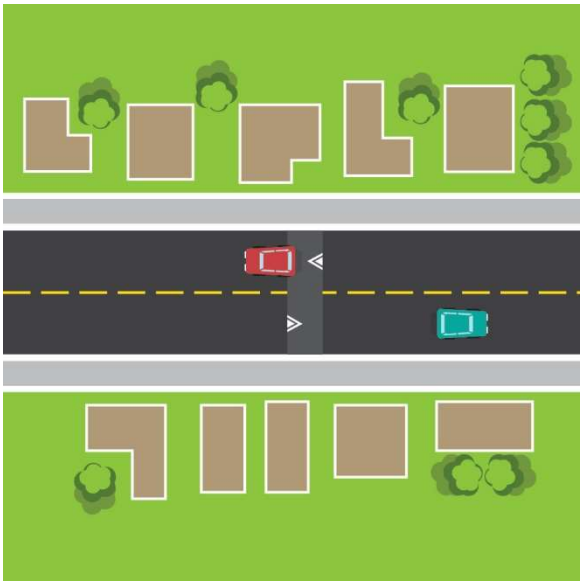

Advantages:

- Reduces vehicle speeds
- Deters cut-through traffic
- One of the least expensive traffic calming devices

Disadvantages:

- Reduces response times for emergency vehicles
- Interferes with pavement overlays
- Possible noise increase due to braking and acceleration of vehicles
- May cause discomfort for drivers with disabilities

Speed table

Longer speed hump with a flat section about ten feet wide in the middle, which may include a crosswalk on the flat section; sometimes constructed with brick or other textured materials.

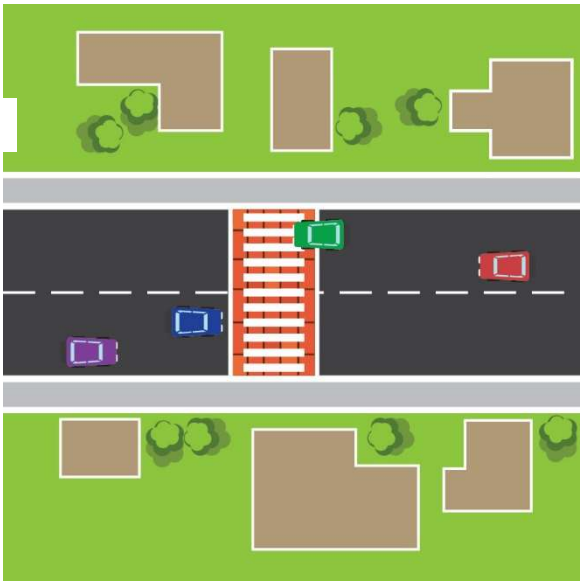

Advantages:

- Reduces vehicle speeds
- Deters cut-through traffic
- Increases visibility for pedestrians by installing a crosswalk on the flat top
- Designs can be more visually pleasant than Speed Humps

Disadvantages:

- Reduces response times for emergency vehicles
- Interferes with pavement overlays
- Possible noise increase due to braking and acceleration of vehicles
- May cause discomfort for drivers with disabilities

Midblock median

A raised island or barrier in the center of a street that separate traffic at midblock which creates a curved path for traveling vehicles in an otherwise straight stretch of roadway.

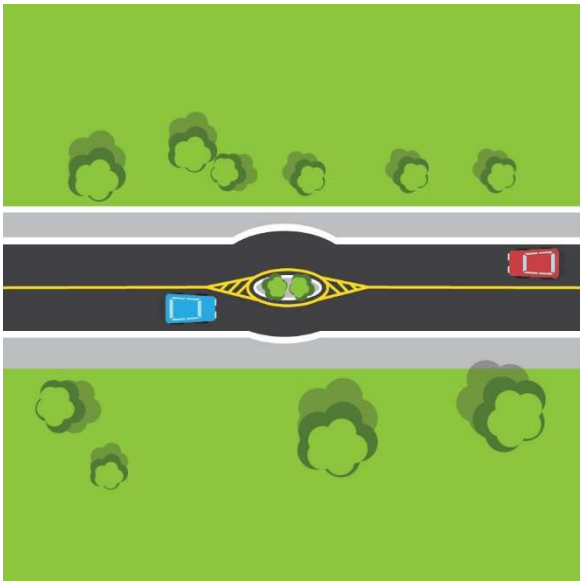

Advantages:

- Slow traffic speed within the vicinity of the measure for two reasons:
  - Change of the horizontal alignment around the median
  - Decreases the perceived width of the street resulting in slower traffic
- Provides opportunity for landscaping

Disadvantages:

- May restrict access to driveways in one direction
- Interferes with pavement overlays
- Potential Right of way needs

Intersection median

A set of raised medians placed on each approach of a T intersection which slows Traffic on the approaches.

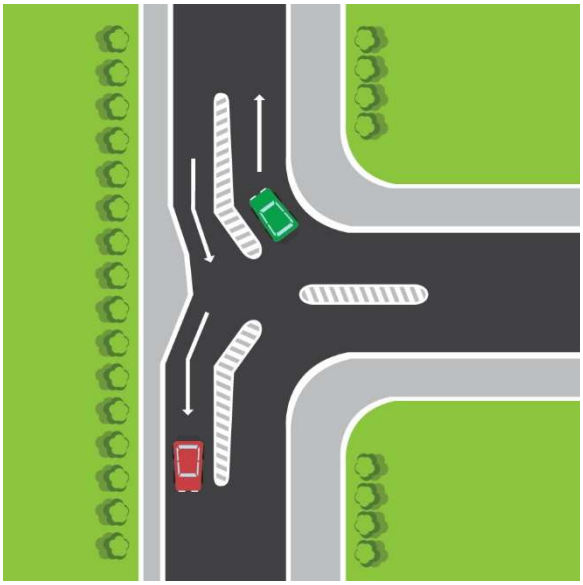

Advantages:

- Reduces traffic speed on the vicinity of the measure
- Provides opportunity for landscaping
- Can provide refuge for pedestrians to shorten crossing distance

Disadvantages:

- Reduces response times for emergency vehicles

Raised intersection

Refers to a roadway intersection that is entirely elevated above the travel way. They are constructed with ramps on all vehicle approaches and often include textured materials on the flat, elevated section. Typically includes the crosswalks.

Advantages:

- Enhances the pedestrian environment and increases safety at the intersection
- Effective at slowing traffic speed on the approaches and through the intersection
- Eliminates need for curb ramps and have positive aesthetic value
- Can calm two streets at once

Disadvantages:

- Impacts to drainage has to be considered in design
- Can be expensive in maintenance

Complete Street

Refers to a roadway design concept for all modes. Complete streets are designed and operated to enable safe access for all users, including pedestrians, bicyclists, motorists and transit riders of all ages and abilities.

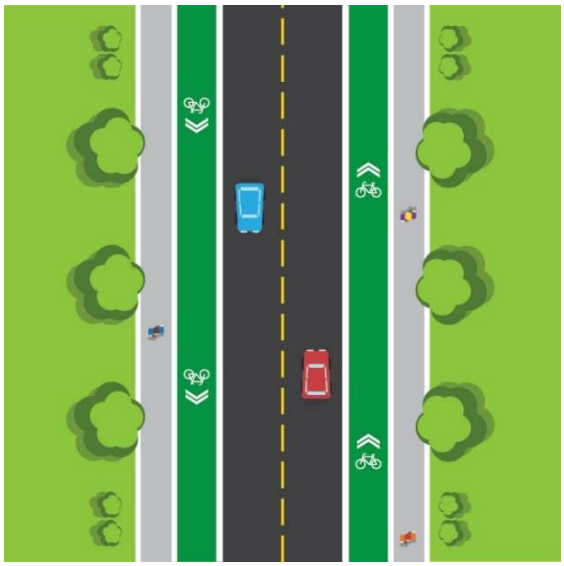

Advantages:

- Help create livable communities for all roadway users
- Improve safety
- Create long-lasting speed reduction
- Have positive aesthetic value
- Help increase the value of the neighborhood

Disadvantages:

- Right of way needs
- Can be expensive in maintenance

7.2 Develop of the Traffic Calming Plan

Consistent with the traffic analysis results, a set of recommended traffic calming improvements was developed following an area-wide systematic approach. Two combined strategies were used in this process: slow down traffic on residential streets and improve traffic flow on collectors and arterials so drivers choose to stay on major roadways.

Special emphasis was made on main avenues and streets across the Village, including Old Cutler Road, which is an essential north-south link for everyday commuters. Note that 2 projects are under development as part of a partnership of the Village of Palmetto Bay with Miami-Dade County. The joint effort will enhance traffic flow at the intersections of Old Cutler Road at SW 176th Street and at SW 144th Street using a Continuous Green T Intersection, and a reversible lane respectively. These improvements are anticipated to decrease the traffic volume on adjacent residential streets and significantly alleviate traffic congestion along Old Cutler Road.

Complete streets were also considered as part of Palmetto Bay Traffic Calming Plan. Several roadway segments were selected to be redesigned into this integrated solution that address traffic calming issues at the same time that provides safer connections for bicyclists and pedestrians within the municipality.

The list of recommended measures per segments is provided in **Table 3** and graphically presented in **Figure 11**.

[Space left blank intentionally.]

Table 3. Recommended Traffic Calming Plan. List of Improvements

Street		Recommendation
SW 140 Drive	Between SW 77 Avenue and SW 74 court	Midblock Median
SW 74 Court	Between SW 140 Drive and SW 136 Street	Speed Humps
SW 144 Street	At SW 87 Avenue	Roundabout
SW 144 Street	At SW 82 Avenue	Roundabout
SW 144 Street	At SW 77 Avenue	Roundabout
SW 144 Street	At Old Cutler Road	Reversible Lane
SW 146 Street	Between SW 87 Avenue and SW 82 Avenue	Midblock Medians
SW 152 Street	At SW 87 Avenue	Roundabout
SW 152 Street	At SW 82 Avenue	Roundabout
SW 152 Street	At SW 77 Avenue	Roundabout
SW 152 Street	At Old Cutler Road	Roundabout
SW 80 Avenue	Between SW 152 Street and SW 155 Street	Speed Humps
SW 156 Street	Between S DIXIE Hwy and SW 89 Avenue	Speed Humps
SW 157 Street	Between S DIXIE Hwy and SW 89 Avenue	Speed Humps
SW 156 Street	At Old Cutler Road	Right Turn Only
SW 84 Avenue	At SW 163 Terrace	Intersection Median
SW 92 Avenue	At SW 164 Street	Roundabout
SW 93 Avenue	Between SW 164 Street and SW 168 Street	Speed Humps
SW 168 Street	At SW 82 Avenue	Roundabout
SW 168 Street	At Old Cutler Road	Roundabout
SW 94 Avenue	Between SW 170 Street and SW 174 Street	Speed Humps
SW 92 Court	Between SW 168 Street and SW 174 Street	Speed Humps
SW 90 Avenue	Between SW 170 Street and SW 174 Street	Speed Humps
SW 86 Avenue	Between SW 168 Street and SW 174 Street	Speed Humps
SW 86 Avenue	Between SW 168 Street and SW 174 Street	Intersection Median
SW 174 Street	Between SW 90 Avenue and SW 87 Avenue	Raised Island
SW 89 Avenue	Between SW 174 Street and SW 176 Street	Speed Hump
SW 176 Street	Between SW 89 Avenue and SW 87 Avenue	Speed Hump
SW 94 Avenue	At SW 180 Street	Raised Intersection
SW 176 Street	At SW 82 Avenue	Roundabout
SW 82 Avenue	At SW 184 Street	Roundabout
SW 82 Avenue	Between SW 182 Street and SW 184 Street	Speed Hump
SW 176 Street	At SW 77 Avenue	Roundabout
SW 176 Street	At Old Cutler Road	Continuous Green T Intersection
SW 92 Avenue	From US1 to SW 184 Street	Complete Street
SW 87 Avenue	From SW 144 Street to SW 160 Street & From SW 168 Street to SW 184 Street	Complete Street
SW 82 Avenue	From SW 152 Street to SW 168 Street	Complete Street
SW 67 Avenue	From SW 136 street to SW 152 Street	Complete Street
SW 152 Street	From SW 67 Avenue to Old Cutler Road	Complete Street

Figure 11. Recommended Traffic Calming Plan Layout

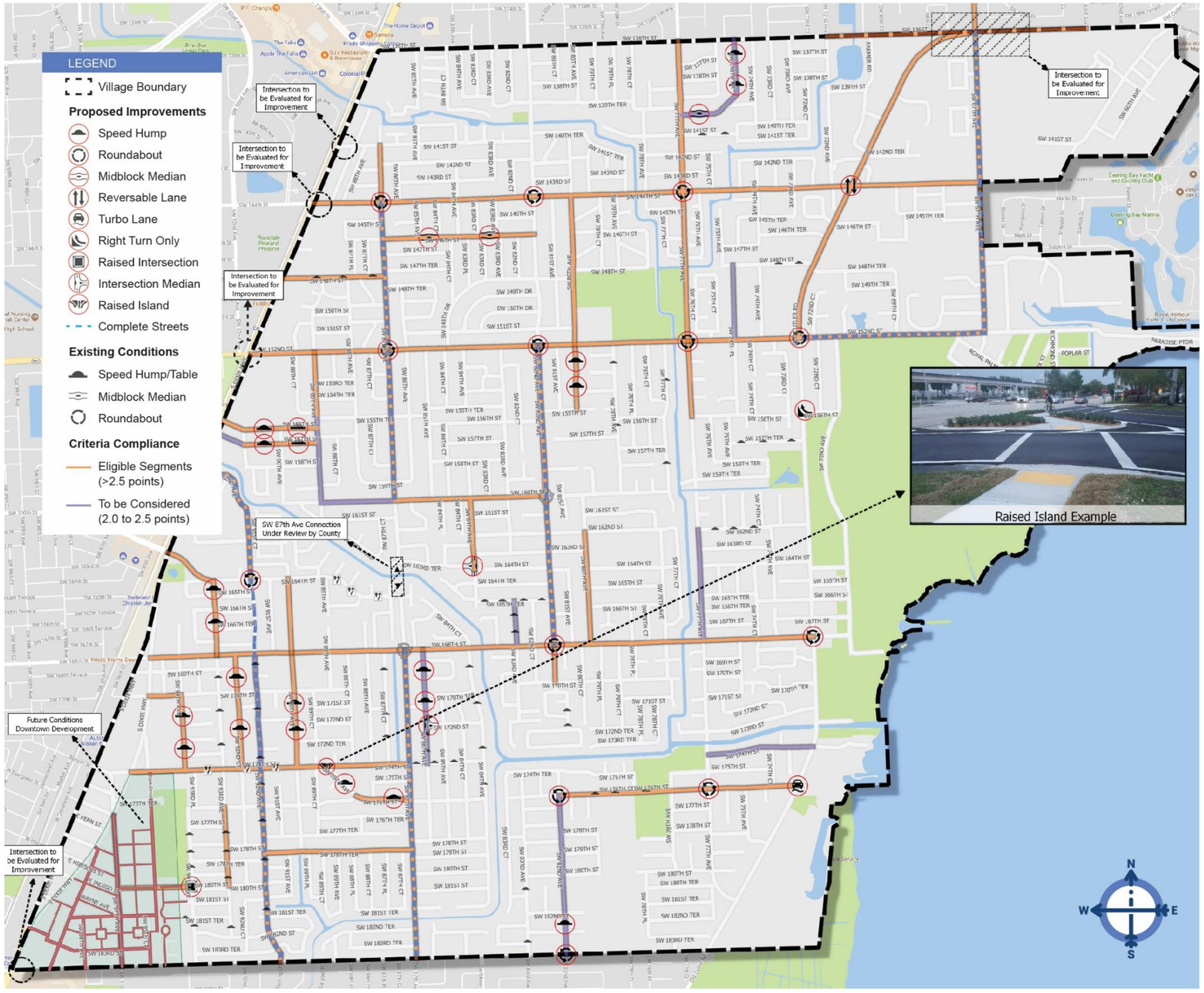

7.3 Preliminary Cost Estimate

The preliminary cost estimates, for the recommended traffic calming measures are shown in **Table 4.** These preliminary cost estimates are based on recent unit construction cost from FDOT Historical Cost for the Miami-Dade County Area, and prices for similar traffic calming devices installed within many municipalities in South Florida.

The following items were not included in this preliminary cost estimate because of the complexity of construction and because they will be co-funded with County grants:

- Continuous Green T Intersection at SW 176th Street and Old Cutler Road
- Reversible lane at SW 144th Street and Old Cutler Road
- Complete streets

The estimated total construction cost for implementing the traffic calming devices is **$5,551,126.25**.

Table 4. Preliminary Cost Estimates

Countermeasure Type	Unit Cost	Quantities	Total Cost
Speed Tables	$ 9,103.00	21	$ 191,163.00
Intersection Median	$ 14,164.00	2	$ 28,328.00
Right-turn Only	$ 17,246.00	1	$ 17,246.00
Midblock Median	$ 17,515.00	3	$ 52,545.00
Raised Intersection*	$ 68,584.00	1	$ 68,584.00
Round-about**	$ 337,482.00	12	$ 4,049,784.00
Raised Island	$ 33,251.00	1	$ 33,251.00
Sub-Total			$ 4,440,901.00
Contingency		25%	$ 1,110,225.25
TOTAL COST			$ 5,551,126.25

** Using Patterned Asphalt. No drainage impact considered.*
** *Includes architectural pavers and landscape.*
Note: Complete Street, Continuous Green T Intersection and Reversible lane projects are not included.

7.4 Project Prioritization

The different traffic calming measures proposed as part of this study were grouped and prioritized primarily considering budgetary constraints and the level of complexity for design and

implementation of a measure. A schedule consistent with a 5-year work program was developed and is presented in **Table 5**.

Table 2. Prioritization of Recommended Improvements

Phase	Proposed Improvements
1	21 Speed Humps, Right-turn Only, 1 Roundabout
2	3 Midblock Medians, 2 Intersection Medians, 1 Roundabout
3	4 Roundabouts
4	3 Roundabouts, 1 Raised Intersection
5	3 Roundabouts, 1 Raised Island

[Space left blank intentionally.]

8.0 CONCLUSIONS

MARLIN was retained by the Village of Palmetto Bay to evaluate the local speed, volume and overall traffic patterns to determine locations within the Village where traffic calming measures should be recommended. As part of this study, MARLIN developed a Village-wide Traffic Calming Master Plan which implemented alternative improvements for location that were identified to have speed, volume and crash issues based on agreed upon thresholds. A comprehensive data collection effort was performed as part of the study and included: 24-Hour Average Daily Traffic Counts, 85th Percentile Speed Data and a Crash Data analysis.

The analysis indicated that many locations throughout the Village meet the threshold values for traffic calming. Consistent with the analysis, a set of recommended traffic calming improvements was developed through an area-wide systematic approach.

The traffic calming recommendations developed as part of this study include:

- Roundabouts
- Speed Humps
- Midblock Medians
- Intersection Medians
- Continuous Green T Intersection
- Raised Intersection
- Raised Island
- Right-turn Only
- Complete Streets
- Reversible lane

A five year plan for implementation was prepared based on annual budget constraints and complexity of designing and implementing improvements.

It is anticipated that the traffic calming plan developed as a result of this entire effort will effectively lower travel speeds and volumes throughout the residential areas and consequently enhance the safety and quality of life for the residents of the Village of Palmetto Bay.

<u>Next Steps:</u>

- Design and submit typical traffic calming devices to Miami-Dade County for approval.
- Prepare engineering specifications.

- Perform post design services.
- Monitor performance on annual basis.

Village of Palmetto Bay | Villagewide Traffic Calming Study

APPENDIX

Appendix A

Survey Form

Sample of Residents Comment Cards

Village of Palmetto Bay

Traffic Calming Study

MARLIN

Public Comment Sheet

Name: _____ Telephone: _____

Address: _____ City: _____ State: _____

Email: _____

Representing: ☐ Homeowner ☐ Business ☐ Other: _____

Please use the space below to comment on the streets and/or intersections you have a traffic concern with. Feel free to write on the back if needed.

Check all traffic concerns that apply

"I have a traffic concern with...

1. _____ intersection/street."
(Intersection or Street name) *(circle one)*

☐ Speeding ☐ Bike/Pedestrian safety
☐ Cut-throughs ☐ Traffic Volume/Congestion
☐ Other: _____

2. _____ intersection/street."
(Intersection or Street name) *(circle one)*

☐ Speeding ☐ Bike/Pedestrian safety
☐ Cut-throughs ☐ Traffic Volume/Congestion
☐ Other: _____

3. _____ intersection/street."
(Intersection or Street name) *(circle one)*

☐ Speeding ☐ Bike/Pedestrian safety
☐ Cut-throughs ☐ Traffic Volume/Congestion
☐ Other: _____

Other Comments: _____

_____

_____

_____

_____

_____

_____

_____

The Town of Palmetto Bay, in compliance with the American Disabilities Act of 1990, hereby states that it does not discriminate on the basis of a disability in the administration of, or access to, any of its employment, programs, services, or activities. Information requests, copies of the ADA Grievance Procedure or copies of the Policy are available from the Village Clerk at (305) 259-1234.

Village of Palmetto Bay

Traffic Calming Study

MARLIN

Public Comment Sheet

Name: WILLIAM KLEIS Telephone: 305 439 8302

Address: 17623 SW 84 AVE City: P.B State: 33157

Email: WMKLEIS@AOL.COM

Representing: ☑ Homeowner ☐ Business ☐ Other: _____

Please use the space below to comment on the streets and/or intersections you have a traffic concern with. Feel free to write on the back if needed.

Check all traffic concerns that apply

"I have a traffic concern with...

1. _____ intersection/street."
(Intersection or Street name) *(circle one)*
☐ Speeding ☐ Bike/Pedestrian safety
☐ Cut-throughs ☐ Traffic Volume/Congestion
☑ Other: _____

2. _____ intersection/street."
(Intersection or Street name) *(circle one)*
☐ Speeding ☐ Bike/Pedestrian safety
☐ Cut-throughs ☐ Traffic Volume/Congestion
☐ Other: _____

3. _____ intersection/street."
(Intersection or Street name) *(circle one)*
☐ Speeding ☐ Bike/Pedestrian safety
☐ Cut-throughs ☐ Traffic Volume/Congestion
☐ Other: _____

Other Comments: MOST EFFORTS TO DATE ARE INEFFECTIVE AND SELF CENTERED. WHY SHOULD TRAFFIC BE DEFLECTED OFF OF ONE STREET TO ANOTHER? TRAFFIC IS WHAT IT IS. NO ONE RESIDENT TRUMPS ANOTHER!

The Village of Palmetto Bay, in compliance with the American Disabilities Act of 1990, hereby states that it does not discriminate on the basis of a disability in the administration of, or access to, any of its employment, programs, services, or activities. Information requests, copies of the ADA Grievance Procedure or copies of the Policy are available from the Village Clerk at (305) 259-1234.

Village of Palmetto Bay

Traffic Calming Study

MARLIN

Public Comment Sheet

Name: FRANK MINTON Telephone: _____

Address: 7865 SW 179 TR City: PALMETTO BAY State: FL

Email: _____

Representing: ☑ Homeowner ☐ Business ☐ Other: _____

Please use the space below to comment on the streets and/or intersections you have a traffic concern with. Feel free to write on the back if needed.

Check all traffic concerns that apply

"I have a traffic concern with...

1. 176 + OLD CUTLER intersection/street." (circle one)
(Intersection or Street name)

☐ Speeding ☐ Bike/Pedestrian safety
☐ Cut-throughs ☐ Traffic Volume/Congestion
☒ Other: GETTING ACCESS TO OLD CUTLER IN MORNING

2. _____ intersection/street." (circle one)
(Intersection or Street name)

☐ Speeding ☐ Bike/Pedestrian safety
☐ Cut-throughs ☐ Traffic Volume/Congestion
☐ Other: _____

3. _____ intersection/street." (circle one)
(Intersection or Street name)

☐ Speeding ☐ Bike/Pedestrian safety
☐ Cut-throughs ☐ Traffic Volume/Congestion
☐ Other: _____

Other Comments:

THE TRAFFIC LIGHT AT 176 ST + OLD CUTLER IS NECESSARY. DO NOT TAKE IT AWAY

The Village of Palmetto Bay, in compliance with the American Disabilities Act of 1990, hereby states that it does not discriminate on the basis of a disability in the administration of, or access to, any of its employment, programs, services, or activities. Information requests, copies of the ADA Grievance Procedure or copies of the Policy are available from the Village Clerk at (305) 259-1234.

Village of Palmetto Bay

Traffic Calming Study

MARLIN

Public Comment Sheet

Name: Timothy B Groleau Telephone: (305) 281-7235

Address: 9305 SW 180th St City: Palmetto Bay State: FL

Email: tbg8661@aol.com

Representing: ☑ Homeowner ☐ Business ☐ Other: _____

Please use the space below to comment on the streets and/or intersections you have a traffic concern with. Feel free to write on the back if needed.

Check all traffic concerns that apply

"I have a traffic concern with...

1. 180th St intersection/street." *(circle one)*
(Intersection or Street name)
☐ Speeding ☐ Bike/Pedestrian safety
☑ Cut-throughs ☑ Traffic Volume/Congestion
☐ Other: _____

2. _____ intersection/street." *(circle one)*
(Intersection or Street name)
☐ Speeding ☐ Bike/Pedestrian safety
☐ Cut-throughs ☐ Traffic Volume/Congestion
☐ Other: _____

3. _____ intersection/street." *(circle one)*
(Intersection or Street name)
☐ Speeding ☐ Bike/Pedestrian safety
☐ Cut-throughs ☐ Traffic Volume/Congestion
☐ Other: _____

Other Comments: instances of passing on a section of 180th w/ 7 houses (ea side of street)
On one occasion, I witnessed a line of 9 cars
at the stop sign at the intersection of 93rd Ave / 180th St

The Village of Palmetto Bay, in compliance with the American Disabilities Act of 1990, hereby states that it does not discriminate on the basis of a disability in the administration of, or access to, any of its employment, programs, services, or activities. Information requests, copies of the ADA Grievance Procedure or copies of the Policy are available from the Village Clerk at (305) 259-1234.

Village of Palmetto Bay

Traffic Calming Study

MARLIN

Public Comment Sheet

Name: Michael Groleau Telephone: 305 951 2169

Address: 9305 SW 180th Street City: Miami State: FL

Email: Michael.Groleau@icloud.com

Representing: ☐ Homeowner ☐ Business ☑ Other: Rent

Please use the space below to comment on the streets and/or intersections you have a traffic concern with. Feel free to write on the back if needed.

Check all traffic concerns that apply

"I have a traffic concern with...

1. 93rd ave and 180th St intersection/street." (circle one)
(Intersection or Street name)
☐ Speeding ☐ Bike/Pedestrian safety
☐ Cut-throughs ☐ Traffic Volume/Congestion
☐ Other: _____

2. _____ intersection/street." (circle one)
(Intersection or Street name)
☐ Speeding ☐ Bike/Pedestrian safety
☐ Cut-throughs ☐ Traffic Volume/Congestion
☐ Other: _____

3. _____ intersection/street." (circle one)
(Intersection or Street name)
☐ Speeding ☐ Bike/Pedestrian safety
☐ Cut-throughs ☐ Traffic Volume/Congestion
☐ Other: _____

Other Comments: The road block on 94th ave has caused dramatic traffic increase on 93rd.

The Village of Palmetto Bay, in compliance with the American Disabilities Act of 1990, hereby states that it does not discriminate on the basis of a disability in the administration of, or access to, any of its employment, programs, services, or activities. Information requests, copies of the ADA Grievance Procedure or copies of the Policy are available from the Village Clerk at (305) 259-1234.

Village of Palmetto Bay

Traffic Calming Study

MARLIN

Public Comment Sheet

Name: JOSE PERLA Telephone: 305-988-5111

Address: 17621 SW 93rd AVE City: PALMETTO BAY State: FL

Email: JOSEPERLA@YAHOO.COM

Representing: ☑ Homeowner ☐ Business ☐ Other: _____

Please use the space below to comment on the streets and/or intersections you have a traffic concern with. Feel free to write on the back if needed.

Check all traffic concerns that apply

"I have a traffic concern with...

1. 180TH ST & 94TH AVE intersection/street." (circle one)
(Intersection or Street name)
ROAD BLOCKAGE CLOSURE

☐ Speeding ☐ Bike/Pedestrian safety
☐ Cut-throughs ☐ Traffic Volume/Congestion
☑ Other: STREET CLOSURE CREATING A MAJOR PROBLEM IN OUR NEIGHBORHOOD

2. _____ intersection/street." (circle one)
(Intersection or Street name)

☐ Speeding ☐ Bike/Pedestrian safety
☐ Cut-throughs ☐ Traffic Volume/Congestion
☐ Other: _____

3. _____ intersection/street." (circle one)
(Intersection or Street name)

☐ Speeding ☐ Bike/Pedestrian safety
☐ Cut-throughs ☐ Traffic Volume/Congestion
☐ Other: _____

Other Comments: THE BLOCKING OF SW 94TH AVE @ 180TH ST HAS CREATED A MAJOR TRAFFIC PROBLEM IN OUR AREA FROM SW 180TH ST TO SW 93rd AVE FROM SW 180TH ST ALL THE WAY TO US1 / SW 160TH ST.

FAIR SOLUTION. REMOVE THE ROAD CLOSURE @ SW 94TH AVE AND INSTALL SPEED BUMPS ALONG 94TH AVE. @ SW 173RD TER & SW 177TH ST

The Village of Palmetto Bay, in compliance with the American Disabilities Act of 1990, hereby states that it does not discriminate on the basis of a disability in the administration of, or access to, any of its employment, programs, services, or activities. Information requests, copies of the ADA Grievance Procedure or copies of the Policy are available from the Village Clerk at (305) 259-1234.

Village of Palmetto Bay

Traffic Calming Study

MARLIN

Public Comment Sheet

Name: DONNA ADKINS Telephone: 305-484-8121

Address: 9370 S.W. 180 ST. City: PALMETTO BAY State: FL

Email: ACTION888@ATTINET

Representing: ☒ Homeowner ☐ Business ☐ Other: _____

Please use the space below to comment on the streets and/or intersections you have a traffic concern with. Feel free to write on the back if needed.

Check all traffic concerns that apply

"I have a traffic concern with...

1. 180 & 94 STREET intersection/street." *(circle one)*
(Intersection or Street name)
☒ Speeding ☐ Bike/Pedestrian safety
☐ Cut-throughs ☒ Traffic Volume/Congestion
☐ Other: _____

2. _____ intersection/street." *(circle one)*
(Intersection or Street name)
☐ Speeding ☐ Bike/Pedestrian safety
☐ Cut-throughs ☐ Traffic Volume/Congestion
☐ Other: _____

3. _____ intersection/street." *(circle one)*
(Intersection or Street name)
☐ Speeding ☐ Bike/Pedestrian safety
☐ Cut-throughs ☐ Traffic Volume/Congestion
☐ Other: _____

Other Comments: SPEEDING VEHICLES, HONKING HORNS,
UNABLE TO BACK OUT OF DRIVEWAY
6:15 AM – 9:00 – 4:00 pm – 6:00 pm
UNABLE TO LOOK OUT FRONT YARD FROM
DINING & LIVING ROOM W/O SEEING CARS LINED UP!!

The Village of Palmetto Bay, in compliance with the American Disabilities Act of 1990, hereby states that it does not discriminate on the basis of a disability in the administration of, or access to, any of its employment, programs, services, or activities. Information requests, copies of the ADA Grievance Procedure or copies of the Policy are available from the Village Clerk at (305) 259-1234.

Village of Palmetto Bay

Traffic Calming Study

MARLIN

Public Comment Sheet

Name: Denise Dubane Telephone: (786) 247-8768

Address: 17701 SW 93rd Ave City: Palmetto Bay State: FL

Email: ~~djdnd~~ djdnd71@gmail.com

Representing: ☒ Homeowner ☐ Business ☐ Other: _____

Please use the space below to comment on the streets and/or intersections you have a traffic concern with. Feel free to write on the back if needed.

Check all traffic concerns that apply

"I have a traffic concern with...

1. 93rd Ave between 174th – south *(Intersection or Street name)* intersection/street." *(circle one)*
☒ Speeding ☒ Bike/Pedestrian safety
☐ Cut-throughs ☒ Traffic Volume/Congestion
☐ Other: _____

2. _____ *(Intersection or Street name)* intersection/street." *(circle one)*
☐ Speeding ☐ Bike/Pedestrian safety
☐ Cut-throughs ☐ Traffic Volume/Congestion
☐ Other: _____

3. _____ *(Intersection or Street name)* intersection/street." *(circle one)*
☐ Speeding ☐ Bike/Pedestrian safety
☐ Cut-throughs ☐ Traffic Volume/Congestion
☐ Other: _____

Other Comments: Traffic on 93rd Ave has increased considerably since 94th Ave (by the park) has been closed off. In the morning (7:00 am-) there are 6-7 cars lined up from the stop sign at 176th + 93rd Ave (4 way). Opening up 94th Ave may not be ideal. There was speeding, cars going the wrong way. It was difficult/dangerous to get to the park (walking) from the neighborhood. Perhaps speed bumps on 94th Ave after it is reopened.

The Village of Palmetto Bay, in compliance with the American Disabilities Act of 1990, hereby states that it does not discriminate on the basis of a disability in the administration of, or access to, any of its employment, programs, services, or activities. Information requests, copies of the ADA Grievance Procedure or copies of the Policy are available from the Village Clerk at (305) 259-1234.

Village of Palmetto Bay

Traffic Calming Study

MARLIN

Public Comment Sheet

Name: Sandra Lozowicki Telephone: 786-295-7568

Address: 7601 SW 175th Street City: Palmetto Bay State: FL

Email: Lozowicki3@att.net

Representing: ☑ Homeowner ☐ Business ☐ Other: _____

Please use the space below to comment on the streets and/or intersections you have a traffic concern with. Feel free to write on the back if needed.

Check all traffic concerns that apply

"I have a traffic concern with...

1. 175th & 77th/78th Ave intersection/street."
(Intersection or Street name) *(circle one)*

☑ Speeding ☑ Bike/Pedestrian safety
☑ Cut-throughs ☑ Traffic Volume/Congestion
☑ Other: Dog walking

2. 176th & 77th Ave intersection/street."
(Intersection or Street name) *(circle one)*

☑ Speeding ☑ Bike/Pedestrian safety
☑ Cut-throughs ☑ Traffic Volume/Congestion
☑ Other: Dog walking

3. _____ intersection/street."
(Intersection or Street name) *(circle one)*

☐ Speeding ☐ Bike/Pedestrian safety
☐ Cut-throughs ☐ Traffic Volume/Congestion
☐ Other: _____

Other Comments: 6A-9A Traffic on SW 176th Street to Palmer Trinity → Speeding Cars and backed up cars

* 152nd and old cutler - Please have a Right Turn lane! I no longer take that Route because of the long wait of the light. I know I'm not the only one.

The Village of Palmetto Bay, in compliance with the American Disabilities Act of 1990, hereby states that it does not discriminate on the basis of a disability in the administration of, or access to, any of its employment, programs, services, or activities. Information requests, copies of the ADA Grievance Procedure or copies of the Policy are available from the Village Clerk at (305) 259-1234.

Village of Palmetto Bay

Traffic Calming Study

MARLIN

Public Comment Sheet

Name: William Kestel Telephone: 305-969-7694

Address: 16720 SW 83 Ave City: P.B. State: FL

Email: billkestel@yahoo.com

Representing: ☒ Homeowner ☐ Business ☐ Other: _____

Please use the space below to comment on the streets and/or intersections you have a traffic concern with. Feel free to write on the back if needed.

Check all traffic concerns that apply

"I have a traffic concern with...

1. SW 83 Ave + SW 165 TERR intersection/street."
(Intersection or Street name) *(circle one)*
☒ Speeding ☒ Bike/Pedestrian safety
☒ Cut-throughs ☒ Traffic Volume/Congestion
☐ Other: _____

2. SW 83 Ave + 168 ST intersection/street."
(Intersection or Street name) *(circle one)*
☒ Speeding ☒ Bike/Pedestrian safety
☒ Cut-throughs ☒ Traffic Volume/Congestion
☐ Other: _____

3. _____ intersection/street."
(Intersection or Street name) *(circle one)*
☐ Speeding ☐ Bike/Pedestrian safety
☐ Cut-throughs ☐ Traffic Volume/Congestion
☐ Other: _____

Other Comments: SW 83 Ave between SW 168 ST and SW 165 TERR has been determined to be the busiest residential street in the Village and Traffic Redirection Needs to be completed per Palmetto Bay Resolution 2016-94.

The **Village** of Palmetto Bay, in compliance with the American Disabilities Act of 1990, hereby states that it does not discriminate on the basis of a disability in the administration of, or access to, any of its employment, programs, services, or activities. Information requests, copies of the ADA Grievance Procedure or copies of the Policy are available from the Village Clerk at (305) 259-1234.

Village of Palmetto Bay

Traffic Calming Study

MARLIN

Public Comment Sheet

Name: SUZANNE BONNER Telephone: _____

Address: 7900 SW 175 ST City: PB State: FL 33157

Email: SUZANNEDUNLEE BONNER@gmail.com

Representing: ☑ Homeowner ☐ Business ☐ Other: _____

Please use the space below to comment on the streets and/or intersections you have a traffic concern with. Feel free to write on the back if needed.

Check all traffic concerns that apply

"I have a traffic concern with...

1. SW 176 ST intersection/street." *(circle one)*
(Intersection or Street name)
☑ Speeding ☐ Bike/Pedestrian safety
☑ Cut-throughs ☑ Traffic Volume/Congestion
☐ Other: _____

2. OLD CUTLER TO intersection/street." *(circle one)*
(Intersection or Street name)
☑ Speeding ☐ Bike/Pedestrian safety
☑ Cut-throughs ☑ Traffic Volume/Congestion
☐ Other: _____

3. 82 Ave intersection/street." *(circle one)*
(Intersection or Street name)
☑ Speeding ☐ Bike/Pedestrian safety
☑ Cut-throughs ☑ Traffic Volume/Congestion
☐ Other: _____

Other Comments: 1) TRAFFIC LIGHT AT OLD CUTLER + SW 176 ST NEEDS TO BE STAGED DURING SCHOOL HOURS.
2) NEED CALMING CIRCLES at 176 ST. OR SPEED BUMPS
3) NEED EXTRA POLICE AT PALMER TRINITY during SCHOOL HOURS
4) NO TURN SIGNS AT CUT THROUGH STREETS
5) PUSH PTS TO OPEN 184 ST.

The Village of Palmetto Bay, in compliance with the American Disabilities Act of 1990, hereby states that it does not discriminate on the basis of a disability in the administration of, or access to, any of its employment, programs, services, or activities. Information requests, copies of the ADA Grievance Procedure or copies of the Policy are available from the Village Clerk at (305) 259-1234.

Village of Palmetto Bay

Traffic Calming Study

MARLIN

Public Comment Sheet

Name: Eric Tullberg Telephone: 305-255-2594

Address: 7884 SW 179 Tr. City: Palmetto Bay State: FL 33157

Email: e341@bellsouth.net

Representing: ☑ Homeowner ☐ Business ☑ Other: Green Mobility Network MPO - BPAC

Please use the space below to comment on the streets and/or intersections you have a traffic concern with. Feel free to write on the back if needed.

Check all traffic concerns that apply

"I have a traffic concern with...

1. SW 72 Av. SW 136 St. SW 168 St. intersection/street." (circle one)
(Intersection or Street name)

☑ Speeding ☑ Bike/Pedestrian safety
☑ Cut-throughs ☐ Traffic Volume/Congestion
☐ Other: Needs to be Neighborhood Greenway

2. SW 176 St. & SW 77 Av. intersection/street." (circle one)
(Intersection or Street name)

☐ Speeding ☑ Bike/Pedestrian safety
☐ Cut-throughs ☑ Traffic Volume/Congestion
☐ Other: Stop sign to be replaced by small traffic circle

3. _____ intersection/street." (circle one)
(Intersection or Street name)

☐ Speeding ☐ Bike/Pedestrian safety
☐ Cut-throughs ☐ Traffic Volume/Congestion
☐ Other: _____

Other Comments: Think out of the box and reduce the number of trips - people driving to the park, children being driven to school, driving 2 miles to the store to get a gal. of milk. Bicycle Boulevards or Neighborhood Greenways slow traffic as well as provide safer streets for cyclists. Use small traffic circles like those on Salzedo in C.G. Slope them from the road to the center so drainage goes into the landscaping, not into the neighboring properties.

The Village of Palmetto Bay, in compliance with the American Disabilities Act of 1990, hereby states that it does not discriminate on the basis of a disability in the administration of, or access to, any of its employment, programs, services, or activities. Information requests, copies of the ADA Grievance Procedure or copies of the Policy are available from the Village Clerk at (305) 259-1234.

Village of Palmetto Bay

Traffic Calming Study

MARLIN

Public Comment Sheet

Name: JEAN MANUEL LANDEO Telephone: 305-904-2649

Address: 8285 SW 176 TERR City: PALMETTO BAY State: FL

Email: jalandeo@gmail.com

Representing: ☑ Homeowner ☐ Business ☐ Other: _____

Please use the space below to comment on the streets and/or intersections you have a traffic concern with. Feel free to write on the back if needed.

Check all traffic concerns that apply

"I have a traffic concern with...

1. 174 st. / OLD CUTTLER RD intersection/street." (circle one)
(Intersection or Street name)
☐ Speeding ☐ Bike/Pedestrian safety
☑ Cut-throughs ☑ Traffic Volume/Congestion
☐ Other: _____

2. 176 st. / OLD CUTTLER RD. intersection/street." (circle one)
(Intersection or Street name)
☐ Speeding ☐ Bike/Pedestrian safety
☐ Cut-throughs ☑ Traffic Volume/Congestion
☐ Other: _____

3. OLD CUTTLER RD. intersection/street." (circle one)
(Intersection or Street name)
☐ Speeding ☐ Bike/Pedestrian safety
☐ Cut-throughs ☑ Traffic Volume/Congestion
☐ Other: _____

Other Comments: _____

The Village of Palmetto Bay, in compliance with the American Disabilities Act of 1990, hereby states that it does not discriminate on the basis of a disability in the administration of, or access to, any of its employment, programs, services, or activities. Information requests, copies of the ADA Grievance Procedure or copies of the Policy are available from the Village Clerk at (305) 259-1234.

Village of Palmetto Bay

Traffic Calming Study

MARLIN

Public Comment Sheet

Name: Steve Turner Telephone: 305 753 9846

Address: 16286 SW 88 Ave Rd City: Palmetto Bay State: FL

Email: Turner160@aol.com

Representing: ☒ Homeowner ☐ Business ☐ Other: _____

Please use the space below to comment on the streets and/or intersections you have a traffic concern with. Feel free to write on the back if needed.

Check all traffic concerns that apply

"I have a traffic concern with...

1. 88 Ave Rd intersection/street." (circle one)
(Intersection or Street name)
☒ Speeding ☐ Bike/Pedestrian safety
☒ Cut-throughs ☐ Traffic Volume/Congestion
☐ Other: _____

2. 87 Ave + 163 Ter intersection/street." (circle one)
(Intersection or Street name)
☐ Speeding ☐ Bike/Pedestrian safety
☐ Cut-throughs ☐ Traffic Volume/Congestion
☐ Other: running stop sign

3. _____ intersection/street." (circle one)
(Intersection or Street name)
☐ Speeding ☐ Bike/Pedestrian safety
☐ Cut-throughs ☐ Traffic Volume/Congestion
☐ Other: _____

Other Comments:

The primary problem with traffic in Palmetto Bay is north/south flow. The city's and the county's main priority should be getting metro-rail extended to Homestead / Florida City.

The Village of Palmetto Bay, in compliance with the American Disabilities Act of 1990, hereby states that it does not discriminate on the basis of a disability in the administration of, or access to, any of its employment, programs, services, or activities. Information requests, copies of the ADA Grievance Procedure or copies of the Policy are available from the Village Clerk at (305) 259-1234.

Village of Palmetto Bay

Traffic Calming Study

MARLIN

Public Comment Sheet

Name: DONNA LATSHAW Telephone: 305-253-0494

Address: 8825 SW 154 TERR City: P.B. State: FL 33157

Email: CHUCKARITA@AOL.COM

Representing: ☒ Homeowner ☐ Business ☐ Other: _____

Please use the space below to comment on the streets and/or intersections you have a traffic concern with. Feel free to write on the back if needed.

Check all traffic concerns that apply

"I have a traffic concern with..

1. 87 AVE 184-168 ST North in AM / South in PM intersection/street."
(Intersection or Street name) *(circle one)*
☐ Speeding ☐ Bike/Pedestrian safety
☐ Cut-throughs ☒ Traffic Volume/Congestion
☐ Other: _____

2. 168 ST - 87 TO 82 AVE East in AM, West in PM intersection/street."
(Intersection or Street name) *(circle one)*
☐ Speeding ☐ Bike/Pedestrian safety
☐ Cut-throughs ☒ Traffic Volume/Congestion
☐ Other: _____

3. 82 AVE - 168 NORTH in AM / South in PM intersection/street."
(Intersection or Street name) *(circle one)*
☐ Speeding ☐ Bike/Pedestrian safety
☐ Cut-throughs ☒ Traffic Volume/Congestion
☐ Other: _____

Other Comments: _____

The Village of Palmetto Bay, in compliance with the American Disabilities Act of 1990, hereby states that it does not discriminate on the basis of a disability in the administration of, or access to, any of its employment, programs, services, or activities. Information requests, copies of the ADA Grievance Procedure or copies of the Policy are available from the Village Clerk at (305) 259-1234.

DISTRICT 2

Village of Palmetto Bay

Traffic Calming Study

MARLIN

Public Comment Sheet

Name: CHARLES LATSHAW Telephone: 305-766-2835

Address: 8825 SW 154 TERR. City: PALMETTO BAY State: FL

Email: CLATSHAW1@YAHOO.COM

Representing: ☒ Homeowner ☐ Business ☐ Other: _____

Please use the space below to comment on the streets and/or intersections you have a traffic concern with. Feel free to write on the back if needed.

Check all traffic concerns that apply

"I have a traffic concern with...

1. 152 & US 1 (EAST SIDE) intersection/street."
(Intersection or Street name) *(circle one)*
☐ Speeding ☐ Bike/Pedestrian safety
☐ Cut-throughs ☒ Traffic Volume/Congestion
☐ Other: _____

2. 144 & US 1 (SOUTH BOUND) intersection/street."
(Intersection or Street name) *(circle one)*
☐ Speeding ☐ Bike/Pedestrian safety
☐ Cut-throughs ☐ Traffic Volume/Congestion
☒ Other: PERMITTED TURNS.

3. _____ intersection/street."
(Intersection or Street name) *(circle one)*
☐ Speeding ☐ Bike/Pedestrian safety
☐ Cut-throughs ☐ Traffic Volume/Congestion
☐ Other: _____

Other Comments:

① WEST BOUND 152ST CONGESTED FOR 4 TO 6 BLOCKS AT EVENING RUSH HOUR.

② SOUTH BOUND US 1 SHOULD BE ABLE TO TURN LEFT ONTO SW 144 – BUT MUST WAIT FOR A GAP.
(S.B. US1 at 152 CAN MAKE THE LEFT EVEN THOUGH THIS IS A LARGER INTERSECTION.

The Village of Palmetto Bay, in compliance with the American Disabilities Act of 1990, hereby states that it does not discriminate on the basis of a disability in the administration of, or access to, any of its employment, programs, services, or activities. Information requests, copies of the ADA Grievance Procedure or copies of the Policy are available from the Village Clerk at (305) 259-1234.

Village of Palmetto Bay

Traffic Calming Study

MARLIN

Public Comment Sheet

Name: Aaron Mattfeld Telephone: 646-765-4923

Address: 15300 SW 80th Ave City: Palmetto Bay State: FL

Email: bluewindow333@gmail.com

Representing: ☑ Homeowner ☐ Business ☐ Other: _____

Please use the space below to comment on the streets and/or intersections you have a traffic concern with. Feel free to write on the back if needed.

Check all traffic concerns that apply

"I have a traffic concern with...

1. 80th Avenue intersection/street." *(circle one)*
(Intersection or Street name)
☑ Speeding ☑ Bike/Pedestrian safety
☑ Cut-throughs ☑ Traffic Volume/Congestion
☐ Other: _____

2. 80th & 152nd intersection/street." *(circle one)*
(Intersection or Street name)
☐ Speeding ☑ Bike/Pedestrian safety
☐ Cut-throughs ☑ Traffic Volume/Congestion
☑ Other: Traffic accidents

3. _____ intersection/street." *(circle one)*
(Intersection or Street name)
☐ Speeding ☐ Bike/Pedestrian safety
☐ Cut-throughs ☐ Traffic Volume/Congestion
☐ Other: _____

Other Comments: My children cannot safely walk to school or the Coral Reef park. Any intervention that will make this avenue and intersection safer would be welcomed.

The Village of Palmetto Bay, in compliance with the American Disabilities Act of 1990, hereby states that it does not discriminate on the basis of a disability in the administration of, or access to, any of its employment, programs, services, or activities. Information requests, copies of the ADA Grievance Procedure or copies of the Policy are available from the Village Clerk at (305) 259-1234.

Village of Palmetto Bay

Traffic Calming Study

MARLIN

Public Comment Sheet

Name: John & Donna Underwood Telephone: 305. 238.6287

Address: 7480 SW 157 Ter City: _____ State: _____

Email: junder@aol.com & dsumiami@aol.com

Representing: ☑ Homeowner ☐ Business ☐ Other: _____

Please use the space below to comment on the streets and/or intersections you have a traffic concern with. Feel free to write on the back if needed.

Check all traffic concerns that apply

"I have a traffic concern with...

1. 157 Terrace intersection/street." ☐ Speeding ☐ Bike/Pedestrian safety ☑ Cut-throughs ☑ Traffic Volume/Congestion ☐ Other: _____
(Intersection or Street name) *(circle one)*

2. _____ intersection/street." ☐ Speeding ☐ Bike/Pedestrian safety ☐ Cut-throughs ☐ Traffic Volume/Congestion ☐ Other: _____
(Intersection or Street name) *(circle one)*

3. _____ intersection/street." ☐ Speeding ☐ Bike/Pedestrian safety ☐ Cut-throughs ☐ Traffic Volume/Congestion ☐ Other: _____
(Intersection or Street name) *(circle one)*

Other Comments:

- Make a designated left turn signal at 77th Ave & 152 St. Time the light in a.m. & p.m. for N & S traffic
- Dedicate a R turn lane (like at 184 St) at 152nd St. & OCR
- Block off the end of 157 Terrace to bend north (like at 156 St)

Thank you for the table bumps on 157 Terrace. We are grateful for your prompt attention.

The Village of Palmetto Bay, in compliance with the American Disabilities Act of 1990, hereby states that it does not discriminate on the basis of a disability in the administration of, or access to, any of its employment, programs, services, or activities. Information requests, copies of the ADA Grievance Procedure or copies of the Policy are available from the Village Clerk at (305) 259-1234.

Village of Palmetto Bay

Traffic Calming Study

MARLIN

Public Comment Sheet

Name: Julia Cespedes Telephone: 3053780993

Address: 15230 SW 77 Ave City: VPB State: FL

Email: thejcespedes@gmail.com

Representing: ☒ Homeowner ☐ Business ☐ Other: _____

Please use the space below to comment on the streets and/or intersections you have a traffic concern with. Feel free to write on the back if needed.

Check all traffic concerns that apply

"I have a traffic concern with...

1. 77th Ave & 152nd going South intersection/street." *(circle one)*
(Intersection or Street name)
☒ Speeding ☒ Bike/Pedestrian safety
☒ Cut-throughs ☒ Traffic Volume/Congestion
☐ Other: 77th Ave is a No-thru Street

2. _____ intersection/street." *(circle one)*
(Intersection or Street name)
☐ Speeding ☐ Bike/Pedestrian safety
☐ Cut-throughs ☐ Traffic Volume/Congestion
☐ Other: _____

3. _____ intersection/street." *(circle one)*
(Intersection or Street name)
☐ Speeding ☐ Bike/Pedestrian safety
☐ Cut-throughs ☐ Traffic Volume/Congestion
☐ Other: _____

Other Comments: _____

The Village of Palmetto Bay, in compliance with the American Disabilities Act of 1990, hereby states that it does not discriminate on the basis of a disability in the administration of, or access to, any of its employment, programs, services, or activities. Information requests, copies of the ADA Grievance Procedure or copies of the Policy are available from the Village Clerk at (305) 259-1234.

Village of Palmetto Bay

Traffic Calming Study

MARLIN

Public Comment Sheet

Name: Doug Rice Telephone: 305 505 1284

Address: 14020 SW 67 Pl City: Palmetto Bay State: FL

Email: SAMCOCOM@AOL.COM

Representing: ☒ Homeowner ☐ Business ☐ Other: HOA

Please use the space below to comment on the streets and/or intersections you have a traffic concern with. Feel free to write on the back if needed.

Check all traffic concerns that apply

"I have a traffic concern with...

1. 136 ST & 67 AVE intersection/street."
(Intersection or Street name) *(circle one)*
☐ Speeding ☒ Bike/Pedestrian safety
☐ Cut-throughs ☒ Traffic Volume/Congestion
☐ Other:

2. 144 ST & OLD CUTLER intersection/street."
(Intersection or Street name) *(circle one)*
☐ Speeding ☐ Bike/Pedestrian safety
☒ Cut-throughs ☒ Traffic Volume/Congestion
☐ Other:

3. 77 AVE & 144 ST intersection/street."
(Intersection or Street name) *(circle one)*
☐ Speeding ☐ Bike/Pedestrian safety
☐ Cut-throughs ☐ Traffic Volume/Congestion
☒ Other: FTY ROW

Other Comments: Obviously over development has taxed our roadways beyond their capacity. This is particularly true @ 67 AVE & 136 ST. Moreover this intersection is poorly marked causing lane violations south bound on 67th AVE @ 136 ST. Due to short left turn lane and lack of L-turn signal - drivers use R-turn only lane as a through lane. This is only one of many traffic issues throughout.

The Village of Palmetto Bay, in compliance with the American Disabilities Act of 1990, hereby states that it does not discriminate on the basis of a disability in the administration of, or access to, any of its employment, programs, services, or activities. Information requests, copies of the ADA Grievance Procedure or copies of the Policy are available from the Village Clerk at (305) 259-1234.

Appendix B

Raw Data

Raw Data

Date	Zone	Street Name	BETWEEN	AND	Original Location	Street Classification	No. of through Lanes	Posted Speed Limit (MPH)	A.D.T.	AM Peak Hour Flow	AM PEAK		PM Peak Hour Flow	PM PEAK		85th Percentile Speed (MPH)	Crashes per Segment
											NB/EB	SB/WB		NB/EB	SB/WB		
12/13/2016	1	OLD CUTLER RD	SW 136 ST/HOWARD DR	SW 144 ST/MITCHELL DR	Old Cutler Rd btwn SW 136th st and N Cartee Rd	Arterial	2LU	40	16793	1223	1062	342	1136	443	799	40	29
12/6/2016	1	OLD CUTLER RD	SW 144 ST/MITCHELL DR	SW 152 ST/CORAL REEF DR	Old Cutler Rd Btwn SW 144th St and SW 146th Terr	Arterial	2LU	40	16115	1179	1091	372	1167	452	724	42	33
12/6/2016	1	S CARTEE RD	OLD CUTLER RD	SW 70 AVE/FARMER RD	S Cartee Rd Btwn Old Cutler Rd and SW 70th Ave	Local Residential	2LU	30	261	54	37	18	29	17	15	28	0
12/13/2016	1	SW 136 ST/HOWARD DR	SW 67 AVE/LUDLAM RD	SW 63 AVE	SW 136th st Btwn SW 67th Ave and SW 63rd Ave	Arterial	2LU	35	16233	1141	1042	358	1122	431	812	41	1
12/6/2016	1	SW 136 ST/HOWARD DR	SW 67 AVE/LUDLAM RD	SW 72 AVE	SW 136th St btwn SW 70th Ave and SW 67th Ave	Urban Collector	2LU	35	5364	524	194	372	377	219	200	42	0
2/14/2017	1	SW 137 ST	SW 75 AVE	SW 77 AVE/PALMETTO RD	SW 137th St btwn SW 75th Ave and 77th Ave	Local Residential	2LU	30	154	29	19	11	25	8	18	27	0
2/28/2017	1	SW 137 ST	SW 82 AVE	SW 80 AVE	SW 137th St Btwn SW 82nd Ave and SW 80th Ave	Local Residential	2LU	30	75	12	11	2	7	7	6	27	0
2/16/2017	1	SW 138 ST	SW 75 AVE	SW 77 AVE/PALMETTO RD	SW 138th St btwn SW 75th Ave and 77th Ave	Local Residential	2LU	30	222	39	33	6	23	9	19	31	1
11/29/2016	1	SW 139 ST	SW 75 AVE	SW 77 AVE/PALMETTO RD	SW 139th St btwn SW 75th Ave adn SW 77th Ave	Local Residential	2LU	30	292	47	40	9	39	15	35	33	1
11/29/2016	1	SW 139 TR	SW 82 AVE	SW 78 AVE	SW 139th Ter btwn SW 78th Ct and SW 79th Ave	Local Residential	2LU	30	431	87	48	40	62	40	24	29	0
11/30/2016	1	SW 139 TR	SW 77 AVE/PALMETTO RD	SW 78 AVE	SW 139th Terrace btwn SW 77th Ave and SW 78th Ave	Local Residential	2LU	30	500	115	85	40	54	28	41	29	1
11/29/2016	1	SW 140 DR	SW 74 CT	SW 77 AVE/PALMETTO RD	SW 140th Dr btwn SW 74th Ct and SW 77th Ave	Local Residential	2LU	30	1177	313	299	14	109	25	98	34	0
4/27/2017	1	SW 140 TR	SW 82 AVE	SW 80 AVE	SW 140TH TER BTWN SW 82ND AVE AND SW 80TH AVE	Local Residential	2LU	30	446	45	12	34	51	32	20	32	0
4/27/2017	1	SW 141 ST	SW 77 AVE/PALMETTO RD	SW 78 AVE	SW 141ST ST BTWN SW 77TH AVE AND SW 78TH AVE	Local Residential	2LU	30	351	78	65	13	49	9	42	32	1
4/27/2017	1	SW 142 ST	SW 77 AVE/PALMETTO RD	SW 78 AVE	SW 142ND ST BTWN SW 77TH AVE BTWN SW 78TH AVE	Local Residential	2LU	30	191	40	36	4	25	8	18	32	0
4/27/2017	1	SW 143 ST	SW 77 AVE/PALMETTO RD	SW 78 AVE	SW 143TH ST BTWN SW 77TH AVE AND SW 78TH AVE	Local Residential	2LU	30	300	17	8	11	83	81	4	29	1
4/27/2017	1	SW 143 ST	SW 80 AVE	SW 82 AVE	SW 143RD ST BTWN SW 80TH AVE AND SW 82ND AVE	Local Residential	2LU	30	107	11	6	10	11	8	6	29	2
12/6/2016	1	SW 144 ST/MITCHELL DR	SR 5/US1/S DIXIE HWY	SW 87 AVE/GALLOWAY RD	SW 144th btwn SW 88th Ave and SW 87th Ave	Urban Collector	2LU	30	7144	492	280	245	609	328	304	36	26
12/6/2016	1	SW 144 ST/MITCHELL DR	SW 82 AVE	SW 77 AVE/PALMETTO RD	SW 144th St Btwn SW 79th Ave and SW 79th Ct	Urban Collector	2LU	30	6861	776	587	239	659	274	438	39	1
12/6/2016	1	SW 144 ST/MITCHELL DR	SW 82 AVE	SW 87 AVE/GALLOWAY RD	SW 144th St btwn SW 84th Ave and SW 84th Ct	Urban Collector	2LU	30	7054	630	458	245	598	252	369	39	4
12/6/2016	1	SW 144 ST/MITCHELL DR	SW 77 AVE/PALMETTO RD	OLD CUTLER RD	SW 144th St Btwn SW 73rd Ct and SW 74th Ave	Urban Collector	2LU	30	5384	587	417	189	480	224	364	40	3
2/14/2017	1	SW 144 ST/MITCHELL DR	OLD CUTLER RD	SW 67 AVE/LUDLAM RD	SW 144th St btwn Old culter Rd and SW 68th Ave	Urban Collector	2LU	30	2045	306	187	140	221	115	107	41	1
12/6/2016	1	SW 146 ST	SW 87 AVE/GALLOWAY RD	SW 82 AVE	SW 146th St Btwn SW 85th Ave and SW 87th Ave	Local Residential	2LU	30	521	60	45	22	50	18	38	35	3
1/12/2017	1	SW 148 ST	SR 5/US1/S DIXIE HWY	SW 87 AVE/GALLOWAY RD	SW 148th St btwn US1 and SW 88th Ave	Local Residential	2LU	30	3188	263	110	166	284	159	141	25	3
4/18/2017	1	SW 148 ST	OLD CUTLER RD	SW 74 AVE	SW 148TH ST BTWN OLD CUTLER RD AND SW 74TH AVE	Local Residential	2LU	30	492	125	121	16	41	15	36	28	0
1/10/2017	1	SW 152 ST/CORAL REEF DR	SW 87 AVE/GALLOWAY RD	SW 82 AVE	SW 152nd St btwn SW 85th Ave and SW 86th Ave	Urban Collector	2LU	35	10212	774	494	346	822	365	505	39	23
12/13/2016	1	SW 152 ST/CORAL REEF DR	SW 67 AVE/LUDLAM RD	OLD CUTLER RD	SW 152nd St Btwn Old Cutler Rd and SW 67th Ave	Urban Collector	2LU	35	4156	610	434	229	480	196	314	43	5
2/14/2017	1	SW 152 ST/CORAL REEF DR	SW 82 AVE	SW 77 AVE/PALMETTO RD	SW 152nd St btwn SW 80th Ave and SW 79th Ave	Urban Collector	2LU	35	10850	929	818	288	899	265	684	36	1
1/10/2017	1	SW 152 ST/CORAL REEF DR	SR 5/US1/S DIXIE HWY	SW 87 AVE/GALLOWAY RD	sw 152nd st btwn US 1 and sw 89th ave	Local Residential	2LU	30	11158	774	412	395	858	400	537	33	1
12/13/2016	1	SW 67 AVE/LUDLAM RD	SW 136 ST/HOWARD DR	SW 144 ST/MITCHELL DR	SW 67th Ave btwn SW 136th st and SW 138th ter	Urban Collector	2LU	35	5383	676	362	314	577	292	354	42	1
12/13/2016	1	SW 67 AVE/LUDLAM RD	SW 144 ST/MITCHELL DR	SW 152 ST/CORAL REEF DR	SW 67th ave btwn SW 144th St and SW 149th Terr	Urban Collector	2LU	35	4739	580	297	312	720	334	416	38	0
2/14/2017	1	SW 67 AVE/LUDLAM RD	SW 136 ST/HOWARD DR	SW 133 TR	SW 67th Ave btwn SW 136th st and SW 133rd Terr	Urban Collector	2LU	30	8846	854	565	294	765	319	446	40	0
12/6/2016	1	SW 70 AVE/FARMER RD	SW 136 ST/HOWARD DR	SW 139 ST	SW 70th Ave Btwn SW 136th St and SW 139th St	Local Residential	2LU	30	1555	187	87	105	204	57	172	29	0
12/6/2016	1	SW 70 AVE/FARMER RD	S CARTEE RD	OLD CUTLER RD	SW 70th Ave Cartee Rd and SW 142nd Terr	Local Residential	2LU	30	880	121	59	68	113	39	75	30	1
12/13/2016	1	SW 74 AVE	SW 148 ST	SW 152 ST/CORAL REEF DR	SW 74th Ave btwn SW 148th St and SW 152nd St	Local Residential	2LU	30	391	79	71	11	38	19	21	35	0
12/13/2016	1	SW 74 PL	SW 148 ST	SW 152 ST/CORAL REEF DR	SW 74th PL btwn SW 148th St and SW 152nd St	Local Residential	2LU	30	589	80	74	17	127	12	121	35	1
11/29/2016	1	SW 75 AVE	SW 136 ST/HOWARD DR	SW 139 ST	SW 75th Ave btwn SW 136th St and SW 137th St	Local Residential	2LU	30	602	111	97	29	74	24	66	33	0
12/13/2016	1	SW 77 AVE/PALMETTO RD	SW 144 ST/MITCHELL DR	SW 152 ST/CORAL REEF DR	SW 77th Ave Btwn SW 152nd St and SW 147th Ter	Local Residential	2LU	35	11690	988	914	235	1105	260	936	40	26
11/29/2016	1	SW 77 AVE/PALMETTO RD	SW 136 ST/HOWARD DR	SW 144 ST/MITCHELL DR	SW 77th Ave btwn SW 136th St and SW SW138th St	Local Residential	2LU	35	13156	1108	954	260	1074	319	865	33	0
11/30/2016	1	SW 77 AVE/PALMETTO RD	SW 144 ST/MITCHELL DR	SW 136 ST/HOWARD DR	SW 77th Ave btwn SW 140th and SW 141st St	Urban Collector	2LU	30	14390	1319	1136	307	1126	329	893	38	0
12/13/2016	1	SW 78 AVE	SW 139 ST	SW 141 ST	SW 78th Ave btwn SW 139th Terr and SW 141st St	Local Residential	2LU	30	648	144	126	18	117	17	103	29	2
4/27/2017	1	SW 78 AVE	SW 144 ST/MITCHELL DR	SW 143 ST	SW 78TH AVE BTWN SW 144TH ST AND SW 143TH ST	Local Residential	2LU	30	1002	232	221	14	126	51	113	24	0
2/16/2017	1	SW 78 CT	SW 136 ST/HOWARD DR	SW 139 TR	SW 78th Ct Btwn SW 136th Ave and SW 139th Terrace	Local Residential	2LU	30	559	123	92	42	77	47	37	34	0
12/13/2016	1	SW 80 AVE	SW 144 ST/MITCHELL DR	SW 152 ST/CORAL REEF DR	SW 80th Ave Btwn SW 152nd St and SW 148th Dr	Local Residential	2LU	30	1124	126	93	80	231	197	34	33	2
4/27/2017	1	SW 80 AVE	SW 140 TR	SW 143 ST	SW 80TH AVE BTWN SW 140TH TERR AND SW 143 ST	Local Residential	2LU	30	268	26	22	8	37	17	28	33	0
2/14/2017	1	SW 80 CT	SW 136 ST/HOWARD DR	SW 138 ST	SW 80th Ct btwn SW 136th St and SW 138th St	Local Residential	2LU	30	252	38	33	7	43	11	37	29	1
12/13/2016	1	SW 87 AVE/GALLOWAY RD	SW 144 ST/MITCHELL DR	SW 152 ST/CORAL REEF DR	SW 87th Ave Btwn SW 152nd St and SW 150th Terr	Local Residential	2LU	30	4658	413	311	128	411	140	335	37	1
1/17/2017	1	SW 87 AVE/GALLOWAY RD	SW 152 ST/CORAL REEF DR	SW 155 TR	SW 87th Ave Btwn SW 155th Terrace and SW 152nd St	Local Residential	2LU	30	2521	212	146	76	286	82	228	37	2
12/6/2016	1	SW 87 AVE/GALLOWAY RD	SW 141 ST	SW 144 ST/MITCHELL DR	SW 87th Ave btwn SW 141st St and SW 144th St	Local Residential	2LU	30	1962	183	155	39	196	83	119	34	3
12/13/2016	1	SW 88 AVE	SW 152 ST/CORAL REEF DR	SW 151 ST	SW 88th Ave Btwn SW 152nd St and SW 151st St	Local Residential	2LU	30	533	44	26	25	48	17	32	35	0
12/13/2016	1	SW 89 AVE	SW 152 ST/CORAL REEF DR	SW 150 ST	SW 89th Ave Btwn SW 152nd St and SW 150th St	Local Residential	2LU	30	747	61	42	37	73	28	55	31	1
1/10/2017	1	SW 89 CT	SW 150 TR	SW 152 ST/CORAL REEF DR	SW 89th Ct Btwn SW 152nd St and SW 150th Ter	Local Residential	2LU	30	150	16	9	9	20	9	13	25	0
1/11/2017	2	SW 155 TR	SW 87 AVE/GALLOWAY RD	SW 89 AVE	SW 155th Ter btwn SW 88th Ave and SW 89th Ave	Local Residential	2LU	30	370	47	17	35	57	45	14	32	0
2/28/2017	2	SW 156 ST	SW 77 AVE/PALMETTO RD	SW 75 AVE	SW 156th St Btwn SW 77th Ave and SW 75th Ave	Local Residential	2LU	30	1024	102	47	55	179	164	19	28	0
1/11/2017	2	SW 156 ST	SW 92 AVE	SW 90 AVE	SW 156TH ST BTWN SW 92ND AVE AND SW 90TH AVE	Local Residential	2LU	30	1472	111	63	57	140	53	87	32	2
5/17/2017	2	SW 156 ST	OLD CUTLER RD	SW 72 AVE	SW 156 ST BTWN OLD CUTLER RD AND SW 72 AVE	Local Residential	2LU	30	86	7	2	5	28	3	27	26	2
1/19/2017	2	SW 157 ST	SW 89 AVE	SW 92 AVE	SW 157th St btwn SW 89th Ave and SW 90th Ave	Local Residential	2LU	30	1214	237	218	29	76	43	43	33	1
1/12/2017	2	SW 157 ST	SR 5/US1/S DIXIE HWY	SW 92 AVE	SW 157th St btwn US1 and SW 92nd Ave	Local Residential	2LU	30	1930	259	225	61	131	60	84	29	0
2/28/2017	2	SW 157 TR	SW 75 AVE	OLD CUTLER RD	SW 157 Terr Btwn SW 75th ave and Old Cutler Rd	Local Residential	2LU	30	1080	97	47	50	242	234	17	25	1
1/12/2017	2	SW 160 ST	SW 87 AVE/GALLOWAY RD	SW 82 AVE	SW 160th St btwn SW 87th Ave and SW 82nd St	Local Residential	2LU	30	2102	263	118	146	245	142	112	36	0
1/12/2017	2	SW 160 ST	SR 5/US1/S DIXIE HWY	SW 93 AVE	SW 160th st btwn US1 and SW 93rd Ave	Local Residential	2LU	30	4151	421	117	347	337	212	147	33	0
1/12/2017	2	SW 160 ST	SW 87 AVE/GALLOWAY RD	SW 89 AVE	SW 160th St btwn SW 89th Ave and SW 87th Ave	Local Residential	2LU	30	760	95	61	42	112	43	70	37	0
1/19/2017	2	SW 162 ST	SW 74 AVE	OLD CUTLER RD	SW 162nd St btwn SW 74th ave and Old Cutler Rd	Local Residential	2LU	30	621	96	75	23	49	21	39	31	1

Raw Data

Date	Zone	Street Name	BETWEEN	AND	Original Location	Street Classification	No. of through Lanes	Posted Speed Limit (MPH)	A.D.T.	AM Peak Hour Flow	AM PEAK		PM Peak Hour Flow	PM PEAK		85th Percentile Speed (MPH)	Crashes per Segment
											NB/EB	SB/WB		NB/EB	SB/WB		
2/28/2017	2	SW 162 ST	SW 84 AVE	SW 82 AVE	SW 162nd St Btwn SW 84th Ave and SW 82nd Ave	Local Residential	2LU	30	86	7	3	4	26	6	23	29	0
3/7/2017	2	SW 162 ST	SW 82 AVE	SW 80 AVE	SW 162ND ST BTWN SW 82ND AVE AND SW 80TH AVE	Local Residential	2LU	30	866	272	136	136	180	82	106	27	0
3/7/2017	2	SW 163 ST	SW 82 AVE	SW 80 AVE	SW 163RD ST BTWN SW 82ND AVE AND SW 80TH AVE	Local Residential	2LU	30	622	190	82	108	116	33	86	29	0
1/19/2017	2	SW 164 ST	SW 74 AVE	OLD CUTLER RD	SW 164th St btwn SW 74th ave and Old Cutler rd	Local Residential	2LU	30	408	95	88	11	23	12	15	33	0
2/28/2017	2	SW 164 TR	SW 82 AVE	SW 84 AVE	SW 164th Terr Btwn SW 82nd Ave and SW 84th Ave	Local Residential	2LU	30	138	9	5	5	20	13	9	31	1
2/28/2017	2	SW 165 TR	SW 84 AVE	SW 82 AVE	SW 165th Terr Btwn SW 82nd Ave Btwn and SW 84th Ave	Local Residential	2LU	30	317	33	28	8	52	22	31	24	0
1/19/2017	2	SW 166 ST	SW 74 AVE	OLD CUTLER RD	SW 166th St btwn SW 74th ave and Old Cutler Rd	Local Residential	2LU	30	149	19	10	9	16	8	9	30	1
1/19/2017	2	SW 167 ST	SW 74 AVE	OLD CUTLER RD	SW 167th St btwn SW 74th Ave and Old Cutler Rd	Local Residential	2LU	30	140	14	7	8	16	9	10	30	0
1/19/2017	2	SW 168 ST/RICHMOND DR	SW 77 AVE/PALMETTO RD	SW 83 CT	SW 168th St btwn SW 77th Ave and SW 78th Ave	Urban Collector	2LU	35	6724	621	350	298	606	373	265	42	0
1/19/2017	2	SW 73 CT	SW 152 ST/CORAL REEF DR	SW 156 ST	SW 73rd St Btwn SW 152nd Terr and SW 156th St	Local Residential	2LU	30	265	22	14	11	26	15	17	28	1
1/19/2017	2	SW 74 CT	SW 164 ST	SW 168 ST/RICHMOND DR	SW 74th Ct btwn SW 164th and SW 168th St	Local Residential	2LU	30	393	104	76	32	26	13	19	34	0
2/14/2017	2	SW 74 PL	SW 152 ST/CORAL REEF DR	SW 156 ST	SW 74th Pl btwn SW 152nd St and SW 156th St	Local Residential	2LU	30	665	52	35	19	138	19	132	33	0
2/28/2017	2	SW 75 AVE	SW 156 ST	SW 157 TR	SW 75th Ave Btwn SW 156th St and SW 157 Terr	Local Residential	2LU	30	1154	99	55	44	258	19	249	21	0
1/19/2017	2	SW 77 AVE/PALMETTO RD	SW 152 ST/CORAL REEF DR	SW 156 ST	SW 77th Ave Btwn SW 152nd Terr and SW 156th st	Local Residential	2LU	30	1614	148	80	69	225	47	194	36	2
1/19/2017	2	SW 77 AVE/PALMETTO RD	SW 162 ST	SW 168 ST/RICHMOND DR	SW 77th Ave btwn 164th and SW 168th St	Local Residential	2LU	30	758	97	59	49	72	37	41	36	0
3/8/2017	2	SW 78 AVE	SW 168 ST/RICHMOND DR	SW 162 ST	SW 78TH AVE BTWN SW 168TH ST AND SW 162ND ST	Local Residential	2LU	30	877	255	123	141	266	111	169	30	0
1/10/2017	2	SW 80 AVE	SW 152 ST/CORAL REEF DR	SW 155 ST	SW 80th ave btwn SW 152nd St and SW 155th St	Local Residential	2LU	30	700	182	174	18	48	25	36	33	2
3/7/2017	2	SW 80 AVE	SW 168 ST/RICHMOND DR	SW 162 ST	SW 80 AVE BTWN SW 168TH ST AND SW 162ND ST	Local Residential	2LU	30	2352	346	290	56	417	121	350	33	0
1/10/2017	2	SW 81 AVE	SW 152 ST/CORAL REEF DR	SW 155 ST	SW 81 st ave btwn SW 152nd St and SW 155th St	Local Residential	2LU	30	571	195	195	11	32	9	27	35	0
1/11/2017	2	SW 82 AVE	SW 152 ST/CORAL REEF DR	SW 160 ST	SW 82nd ave btwn SW 155th St and SW 156th St	Urban Collector	2LU	30	12292	1089	1039	309	1105	309	945	37	1
1/11/2017	2	SW 82 AVE	SW 152 ST/CORAL REEF DR	SW 160 ST	SW 82nd ave btwn SW 152nd St and SW 155th St	Urban Collector	2LU	30	11471	891	718	304	1070	286	930	37	2
2/28/2017	2	SW 82 AVE	SW 160 ST	SW 162 ST	SW 82nd Ave Btwn SW 160th St and SW 162nd St	Local Residential	2LU	30	12009	1266	1174	332	1098	251	925	36	3
2/28/2017	2	SW 82 CT	SW 168 ST/RICHMOND DR	SW 165 TR	SW 82nd Ct Btwn SW 165th Terr and SW 168th St	Local Residential	2LU	30	143	14	8	6	29	6	24	31	0
2/28/2017	2	SW 83 AVE	SW 168 ST/RICHMOND DR	SW 165 TR	SW 83th Ave Btwn SW 165th Terr and SW 168th St	Local Residential	2LU	30	1292	110	75	43	175	35	154	26	1
2/28/2017	2	SW 83 AVE	SW 160 ST	SW 163 ST	SW 83rd Ave Btwnn SW 161st St and SW 162nd St	Local Residential	2LU	30	263	28	17	13	29	10	23	33	0
2/28/2017	2	SW 84 AVE	SW 162 ST	SW 164 ST	SW 84nd Ave Btwn SW 162nd Terr and SW 164th St	Local Residential	2LU	30	1227	120	85	35	161	37	129	35	0
5/24/2016	2	SW 84 AVE	SW 172 ST	SW 174 ST	SW 84TH AVE BTWN SW 172ND ST AND SW 174 ST	Local Residential	2LU	30	662	61	54	14	61	22	42	33	0
1/19/2017	2	SW 87 AVE/GALLOWAY RD	SW 160 ST	SW 155 TR	SW 87th Ave btwn SW 160th St and SW 155th Terr	Local Residential	2LU	30	2142	202	130	74	246	59	197	38	3
1/10/2017	2	SW 88 AVE	SW 152 ST/CORAL REEF DR	SW 155 TR	SW 88th Ave btwn SW 152nd St and SW 155th Terr	Local Residential	2LU	30	475	47	38	19	52	23	37	36	0
1/10/2017	2	SW 89 AVE	SW 152 ST/CORAL REEF DR	SW 155 TR	SW 89th Ave btwn SW 152nd St and SW 155th Terr	Local Residential	2LU	30	2273	336	302	66	162	61	126	35	0
1/10/2017	2	SW 89 AVE	SW 155 ST	SW 160 ST	SW 89th Ave btwn SW 157th St and SW 158th St	Local Residential	2LU	30	1129	119	53	66	113	52	63	30	1
1/12/2017	2	SW 90 AVE	SW 155 ST	SW 160 ST	SW 90th Ave btwn SW 157th St and SW 160th St	Local Residential	2LU	30	284	23	14	11	34	22	17	30	1
5/26/2016	2	SW 90 AVE	SW 168 ST/RICHMOND DR	SW 164 ST	SW 90th Ave Btwn SW 168th St and SW 164th St	Local Residential	2LU	30	906	168	134	34	72	41	35	38	0
1/19/2017	2	SW 92 AVE	SR 5/US1/S DIXIE HWY	SW 164 ST	SW 92nd Ave btwn US1 and SW 164th St	Local Residential	2LU	30	5444	418	141	306	444	272	187	33	6
1/12/2017	2	SW 93 AVE	SW 164 ST	SW 168 ST/RICHMOND DR	SW 93rd Ave btwn SW 164th and SW 168th St	Local Residential	2LU	30	1811	377	356	43	128	39	90	35	0
6/1/2016	3	SW 168 ST/RICHMOND DR	SR 5/US1/S DIXIE HWY	SW 90 AVE	SW 168th St Btwn SW 92nd Ave and SW 90th Ave	Urban Collector	2LU	35	5868	681	363	353	395	225	375	39	29
5/24/2017	3	SW 169 ST	OLD CUTLER RD	SW 73 CT	SW 169th St Btwn Old Cutler Rd and SW 73rd Ct	Local Residential	2LU	30	106	13	7	8	14	11	5	19	0
1/24/2017	3	SW 170 ST	SR 5/US1/S DIXIE HWY	SW 94 AVE	SW 170th St btwn US1 and SW 94th Ave	Local Residential	2LU	30	916	98	56	48	67	43	32	30	9
5/17/2017	3	SW 170 ST	SW 83 AVE	SW 78 AVE	SW 170th St Btwn SW 82nd Ave and SW 80th CT	Local Residential	2LU	30	138	15	13	7	15	9	9	29	1
5/24/2017	3	SW 170 ST	SW 88 CT	SW 89 AVE	SW 170th St Btwn SW 88th Ct and SW 89th Ave	Local Residential	2LU	30	186	17	14	6	32	15	18	26	0
5/17/2017	3	SW 170 TR	SW 85 AVE	SW 84 CT	SW 170th Terrace Btwn SW 85th Ave and SW 84th Ct	Local Residential	2LU	30	425	128	125	16	23	7	17	29	0
5/24/2017	3	SW 172 ST	SW 74 AVE	SW 76 AVE	SW 172nd St Btwn SW 74th Ave and SW 76th Ave	Local Residential	2LU	30	103	11	7	6	11	8	6	28	0
5/17/2017	3	SW 172 ST	SW 85 AVE	SW 84 CT	SW 172nd St Btwn SW 85th Ave and SW 84th Ct	Local Residential	2LU	30	68	22	9	13	12	5	7	25	0
5/24/2017	3	SW 173 ST	OLD CUTLER RD	SW 77 AVE/PALMETTO RD	SW 173rd St Btwn Old Cutler Rd and Palmetto Rd	Local Residential	2LU	30	363	31	19	16	68	54	16	36	0
1/24/2017	3	SW 174 ST	OLD CUTLER RD	SW 77 AVE/PALMETTO RD	SW 174th St btwn Old cutler Rd and SW 73rd Ct	Local Residential	2LU	30	1524	383	371	98	97	30	86	31	0
1/25/2017	3	SW 174 ST	SR 5/US1/S DIXIE HWY	SW 94 AVE	SW 174th St btwn SW 95th Ave and SW 94th Ave	Local Residential	2LU	30	2942	366	226	154	222	114	124	37	8
5/24/2016	3	SW 174 ST	SW 93 AVE	SW 92 CT	SW 174th St Between SW 93rd Ave and SW 92nd Ct	Local Residential	2LU	30	1767	135	81	61	148	75	80	32	3
5/24/2016	3	SW 174 ST	SW 86 ST	SW 85 ST	SW 174th St Btwn SW 86th st and SW 85th st	Local Residential	2LU	30	367	40	34	15	34	21	17	31	0
2/28/2017	3	SW 174 ST	SW 90 AVE	SW 87 AVE/GALLOWAY RD	SW 174th St Btwn SW 88th Ave and SW 87th Ave	Local Residential	2LU	30	2256	483	348	141	208	107	101	37	8
1/24/2017	3	SW 175 ST	SW 78 AVE	SW 77 AVE/PALMETTO RD	SW 175th St btwn and SW 77th Ave	Local Residential	2LU	30	176	48	32	17	17	6	13	34	0
5/24/2017	3	SW 175 ST	SW 77 AVE/PALMETTO RD	SW 74 CT	SW 175th St Btwn SW 74th Ct and Palmetto Rd	Local Residential	2LU	30	215	96	90	6	11	7	6	33	0
1/24/2017	3	SW 176 ST	SW 77 AVE/PALMETTO RD	OLD CUTLER RD	SW 176th St btwn SW 77th Ave and Old Cutler Rd	Local Residential	2LU	30	2412	371	224	211	279	170	114	36	1
5/25/2016	3	SW 176 ST	SW 77 AVE/PALMETTO RD	SW 82 AVE	SW 176th St Btwn SW 78th Ave and SW 79th Ave	Local Residential	2LU	30	3217	548	296	263	333	202	131	38	2
5/24/2016	3	SW 176 ST	SW 77 AVE/PALMETTO RD	SW 82 AVE	SW 176th St Btwn SW 79th Ave and SW 80th Ct	Local Residential	2LU	30	2455	369	322	89	204	105	139	37	2
2/28/2017	3	SW 176 ST	SW 84 AVE	SW 87 AVE/GALLOWAY RD	SW 176th St Btwn SW th 85th Ave and SW 87th Ave	Local Residential	2LU	30	522	162	152	14	21	14	12	33	1
2/28/2017	3	SW 176 ST	SW 87 AVE/GALLOWAY RD	SW 89 AVE	SW 176th St Btwn SW th 87th Ave and SW 88th Ave	Local Residential	2LU	30	1116	371	175	199	73	56	26	41	0
4/25/2017	3	SW 178 ST	SW 87 AVE/GALLOWAY RD	SW 84 AVE	SW 178TH ST BTWN SW 87TH AVE AND SW 84TH AVE	Local Residential	2LU	30	264	35	12	23	30	20	12	33	0
4/25/2017	3	SW 178 TR	SW 92 AVE	SW 87 AVE/GALLOWAY RD	SW 178TH TERR BTWN SW 92ND AVE AND SW 87TH AVE	Local Residential	2LU	30	1162	117	51	73	119	47	94	36	1
4/25/2017	3	SW 179 ST	SW 87 AVE/GALLOWAY RD	SW 84 AVE	SW 179TH ST BTWN SW 87TH AVE AND SW 84TH AVE	Local Residential	2LU	30	214	63	59	6	19	8	11	32	0
1/18/2017	3	SW 180 ST	SW 97 AVE/FRANJO RD	SW 94 AVE	SW 180th St btwn SW 97th Ave and SW 94th Ave	Local Residential	2LU	30	1535	182	147	55	136	83	64	35	2
4/25/2017	3	SW 180 ST	SW 87 AVE/GALLOWAY RD	SW 84 AVE	SW 180TH ST BTWN SW 87TH AVE AND SW 84TH AVE	Local Residential	2LU	30	172	19	16	7	17	8	16	29	0
4/27/2017	3	SW 180 ST	SW 93 AVE	SW 94 AVE	SW 180TH ST BTWN SW 93RD AVE AND SW 94TH AVE	Local Residential	2LU	30	872	96	45	51	92	24	73	32	0
4/25/2017	3	SW 181 ST	SW 87 AVE/GALLOWAY RD	SW 84 AVE	SW 181ST ST BTWN SW 87TH AVE AND SW 84TH AVE	Local Residential	2LU	30	138	45	39	12	42	10	32	34	1

Raw Data

Date	Zone	Street Name	BETWEEN	AND	Original Location	Street Classification	No. of through Lanes	Posted Speed Limit (MPH)	A.D.T.	AM Peak Hour Flow	AM PEAK		PM Peak Hour Flow	PM PEAK		85th Percentile Speed (MPH)	Crashes per Segment
											NB/EB	SB/WB		NB/EB	SB/WB		
4/27/2017	3	SW 183 TR	SW 78 CT	SW 78 PL	SW 183RD TER BTWN SW 78TH CT AND SW 78TH PL	Local Residential	2LU	30	605	63	25	39	48	23	30	24	0
1/12/2017	3	SW 185 ST	SW 92 AVE	SW 90 AVE	SW 185TH ST BTWN SW 92ND AVE AND SW 90TH AVE	Local Residential	2LU	30	450	38	22	16	42	18	27	28	0
1/24/2017	3	SW 74 CT	SW 174 ST	SW 176 ST	SW 74th Ct btwn SW 174th St and SW 176th St	Local Residential	2LU	30	565	168	141	51	29	19	16	30	0
5/24/2017	3	SW 74 CT	SW 168 ST/RICHMOND DR	SW 168 TR	SW 74th Ct Btwn SW 168th St and SW 168th Terrace	Local Residential	2LU	30	196	17	15	7	23	11	15	21	0
1/24/2017	3	SW 75 AVE	SW 178 TR	SW 176 ST	SW 75th Ave btwn SW 178th terr and SW 176th St	Local Residential	2LU	30	120	21	9	13	120	58	62	32	0
5/24/2017	3	SW 76 AVE	SW 169 ST	SW 170 ST	SW 76th Ave Btwn SW 169th St and SW 170 th St	Local Residential	2LU	30	156	19	16	6	15	9	7	30	0
1/24/2017	3	SW 77 AVE/PALMETTO RD	SW 174 ST	SW 176 ST	SW 77th Ave btwn SW 175th St and SW 176th St	Local Residential	2LU	30	1088	318	258	94	79	18	72	31	0
2/22/2017	3	SW 77 AVE/PALMETTO RD	SW 176 ST	SW 180 ST	SW 77th Ave btwn SW 176th St and SW 178th St	Local Residential	2LU	30	816	243	229	14	41	18	25	32	0
1/24/2017	3	SW 77 AVE/PALMETTO RD	SW 180 ST	OLD CUTLER RD	SW 77th Ave btwn SW 180th st and Old Cutler Rd	Local Residential	2LU	30	755	204	175	36	62	28	34	33	0
5/24/2017	3	SW 77 AVE/PALMETTO RD	SW 168 ST/RICHMOND DR	SW 173 ST	SW 77th Ave Btwn SW 169th St and SW 169th Terrace	Local Residential	2LU	30	657	54	40	22	86	23	69	34	0
1/24/2017	3	SW 78 AVE	SW 177 ST	SW 178 ST	SW 78th Ave btwn SW 177th St and SW 178th St	Local Residential	2LU	30	212	27	16	11	25	11	14	34	0
5/25/2017	3	SW 78 AVE	SW 168 ST/RICHMOND DR	SW 170 ST	SW 78th Ave Btwn SW 168th St and SW 170 th St	Local Residential	2LU	30	319	28	20	10	35	15	26	29	0
5/24/2017	3	SW 78 PL	SW 168 ST/RICHMOND DR	SW 170 ST	SW 78th Pl Btwn SW 168th St and SW 170th St	Local Residential	2LU	30	85	8	5	5	12	6	9	27	0
5/24/2016	3	SW 79 AVE	SW 176 ST	SW 175 ST	SW 79th Ave Btwn SW 176th St and SW 175th St	Local Residential	2LU	30	195	20	6	15	18	10	11	24	0
5/24/2017	3	SW 79 CT	SW 168 ST/RICHMOND DR	SW 170 ST	SW 79th CT Btwn SW 168th St and SW 170th St	Local Residential	2LU	30	457	31	23	11	45	23	27	31	1
5/24/2017	3	SW 79 PL	SW 168 ST/RICHMOND DR	SW 170 ST	SW 79th PL Btwn SW 168th St and SW 170th St	Local Residential	2LU	30	303	24	18	12	25	13	19	27	0
5/24/2017	3	SW 80 CT	SW 168 ST/RICHMOND DR	SW 170 ST	SW 80th CT Btwn SW 168th St and SW 170th St	Local Residential	2LU	30	255	25	21	6	29	13	17	32	0
5/17/2017	3	SW 82 AVE	SW 168 ST/RICHMOND DR	SW 170 ST	SW 82nd Ave Btwn SW 168th St SW 170th St	Local Residential	2LU	30	653	56	41	20	67	27	40	34	4
2/22/2017	3	SW 82 AVE	SW 184 ST/EUREKA DR	SW 176 ST	SW 82nd Ave Btwn SW 183th St SW 182nd St	Local Residential	2LU	30	1064	220	204	28	58	37	31	36	0
5/17/2017	3	SW 82 CT	SW 168 ST/RICHMOND DR	SW 170 ST	SW 82nd Ct Btwn SW 168th St and SW 170th St	Local Residential	2LU	30	83	6	4	3	11	5	10	29	0
5/17/2017	3	SW 83 AVE	SW 168 ST/RICHMOND DR	SW 170 ST	SW 83rd Ave Btwn SW 170th St and SW 169th Terrace	Local Residential	2LU	30	376	33	21	14	38	22	19	31	0
2/22/2017	3	SW 83 AVE	SW 176 ST	SW 184 ST/EUREKA DR	SW 83rd Ave Btwn SW 176th St and SW 176th Terrace	Local Residential	2LU	30	258	25	18	9	24	12	13	22	0
5/26/2016	3	SW 84 AVE	SW 168 ST/RICHMOND DR	SW 170 TR	SW 84th Ave Btwn SW 168th St and 170th Terrace	Local Residential	2LU	30	1230	197	187	20	113	37	82	23	0
5/24/2016	3	SW 84 CT	SW 172 ST	SW 174 ST	SW 84th ct Btwn 172nd St and 174th St	Local Residential	2LU	30	82	8	7	7	11	6	6	33	1
5/24/2016	3	SW 85 AVE	SW 172 ST	SW 174 ST	SW 85th Ave Btwn SW 172nd St and SW 174th st	Local Residential	2LU	30	83	6	6	1	11	6	7	27	0
5/17/2017	3	SW 86 AVE	SW 168 ST/RICHMOND DR	SW 170 TR	SW 86 AVE BTWN SW 168 ST AND SW 170 TR	Local Residential	2LU	30	1216	379	332	77	45	16	34	32	0
2/28/2017	3	SW 87 AVE/GALLOWAY RD	SW 178 ST	SW 176 ST	SW 87th Ave Btwn SW 178th St and SW 176th St	Urban Collector	2LU	30	12040	1074	1003	311	1037	366	800	39	14
2/28/2017	3	SW 87 AVE/GALLOWAY RD	SW 168 ST/RICHMOND DR	SW 174 ST	SW 87th Ave Btwn SW 168th St and SW 174 St	Urban Collector	2LU	30	11016	818	606	391	1057	352	848	39	10
5/17/2017	3	SW 87 CT	SW 168 ST/RICHMOND DR	SW 174 ST	SW 87th Ct Between SW 168th St and SW 174th St	Urban Collector	2LU	35	396	99	77	22	27	12	17	28	0
5/26/2016	3	SW 88 AVE	SW 168 ST/RICHMOND DR	SW 174 ST	SW 88th Ct Btwn SW 168th St and SW 170th St	Local Residential	2LU	30	458	173	173	1	21	21		34	1
5/26/2016	3	SW 88 CT	SW 168 ST/RICHMOND DR	SW 170 ST	SW 88th Ct Btwn SW 168th St and SW 170th St	Local Residential	2LU	30	168	22	4	19	26	1	26	27	0
5/26/2016	3	SW 89 AVE	SW 168 ST/RICHMOND DR	SW 170 ST	SW 89th Ave Btwn SW 168th ST and SW 170th St	Local Residential	2LU	30	415	157	114	44	45	20	28	28	2
4/18/2017	3	SW 90 AVE	SW 170 ST	SW 174 ST	SW 90TH AVE BTWN SW 170TH ST AND SW 174TH ST	Local Residential	2LU	30	1880	432	311	132	173	68	106	34	0
4/18/2017	3	SW 92 AVE	SW 170 ST	SW 174 ST	SW 92 AVE BTWN SW 170 ST AND SW 174 ST	Local Residential	2LU	30	2054	359	348	39	172	46	141	29	0
4/27/2017	3	SW 92 AVE	SW 180 ST	SW 181 ST	SW 92ND AVE BTWN SW 180TH ST AND SW 181ST ST	Local Residential	2LU	30	2886	531	491	63	267	66	204	29	0
5/17/2017	3	SW 92 CT	SW 168 ST/RICHMOND DR	SW 174 ST	SW 92nd CT Btwn SW 170 th St and SW 174th St	Local Residential	2LU	30	826	224	202	30	55	19	37	37	1
4/27/2017	3	SW 93 AVE	SW 176 ST	SW 180 ST	SW 93RD AVE BTWN SW 176TH ST AND SW 180TH ST	Local Residential	2LU	30	1355	168	109	70	161	23	140	31	2
4/27/2017	3	SW 93 PL	SW 176 ST	SW 174 ST	SW 93RD PL BTWN SW 176TH ST AND SW 174TH ST	Local Residential	2LU	30	652	194	187	10	38	25	18	31	1
1/24/2017	3	SW 94 AVE	SW 170 ST	SW 174 ST	SW 94th Ave btwn SW 170th St and SW 174th St	Local Residential	2LU	30	1160	185	137	52	87	24	67	35	3
4/27/2017	3	SW 94 AVE	SW 176 ST	SW 180 ST	SW 94TH AVE BTWN SW 176TH ST AND SW 180TH ST	Local Residential	2LU	30	905	280	278	3	42	41	2	23	1
1/19/2017	3	SW 97 AVE/FRANJO RD	SR 5/US1/S DIXIE HWY	SW 180 ST	SW 97th Ave btwb US1 and SW 180th St	Urban Collector	2LU	30	6274	408	106	372	507	271	259	39	0

Appendix C

Intergovernmental Agency Agreement

THIS INTERGOVERNMENTAL AGENCY AGREEMENT TO PERFORM TRAFFIC ENGINEERING FUNCTIONS

THIS INTERGOVERNMENTAL AGENCY AGREEMENT TO PERFORM TRAFFIC ENGINEERING FUNCTIONS **(the Agreement),** made and entered into this_____day of _____, 2017, by and between the **VILLAGE OF PALMETTO BAY, FLORIDA,** a municipal corporation of the STATE OF FLORIDA ("the Village"), and **MIAMI-DADE COUNTY (COUNTY),** a political subdivision of the STATE OF FLORIDA, MIAMI-DADE County (the "County")

WITNESSETH

WHEREAS, pursuant to Section 2-96.1 of the Miami-Dade County Code, all traffic control and traffic engineering services in Miami-Dade County are under the exclusive jurisdiction of the COUNTY; and

WHEREAS, the VILLAGE desires to assume the installation and maintenance responsibilities of certain traffic engineering functions pertaining to its local municipal streets only and has requested the County to allow it to perform the function of conducting engineering studies for the feasibility of traffic calming devices and installing traffic calming; and

WHEREAS, the Village has continuing services Transportation Engineers available to plan, design and perform construction inspection of Transportation Projects within its Capital Improvements Programs, and has represented to the County that it is capable, equipped, and qualified to perform the duties and functions requested herein**;** and

WHEREAS, the VILLAGE Council has adopted Resolution 2016-69, attached hereto as exhibit "A" and by reference made a part hereof, authorized its office(s) to enter into this **AGREEMENT.**

NOW THEREFORE, the VILLAGE and the COUNTY agree as follows:

1. The recitals set forth above are incorporated herein by reference.
2. The VILLAGE may install and maintain the following designated types of traffic calming devices, and/or signs (collectively the "Traffic Calming Devices") and only on those local municipal streets operated and maintained by the Village within its boundaries, and not less than 250 feet from existing traffic signals, County roadways, State roadways and the boundaries of the Village limits; or within school zones, or adjacent to bicycle facilities or hospitals:

a) Traffic Circles

b) Speed Humps

c) Historic Street Name Signs

d) In-Street Pedestrian Crossing Signs

e) Raised Intersections

3. Any such Traffic Calming Devices may be installed on local municipal streets only after an appropriate traffic engineering study has been performed and signed and sealed by a Florida licensed professional engineer, and has received written approval by the Village Manager or his/her designee. A copy of such traffic study must be submitted to the Department of Transportation and Public Works ("DTPW").

4. Any such Traffic Calming Devices may be installed on local municipal streets only after sealed and signed design plans have been reviewed and received written approval by the Village, through its Village Manager or his/her designee. Provided that such design plans utilize the standard County design attached as Exhibit "B", or the standard Village design attached as Exhibit "C," as may be applicable, no additional review or approval by the County shall be required before installation. To the extent that design plans deviate from the standard design attached as Exhibit "B", such plans shall be submitted to the County for its review and written approval. A copy of such design plans must be submitted to the applicable Department of the County.

5. The VILLAGE shall attach a decal to the back of the sign panels indicating the Village's ownership and date of installation.

6. The VILLAGE assumes sole and complete responsibility for the maintenance of all such Traffic Calming Devices.

7. The VILLAGE assumes sole and complete liability for any and all accidents, damages, claims, and/or injuries which may or are alleged to occur or arise out of the installation, operation or maintenance of said Traffic Control Devices, and hereby indemnifies and saves harmless the County from any and all claims and damages arising from such installation, operation or maintenance of said Traffic Calming Devices. All Traffic Calming Devices installed by the VILLAGE in accordance with this AGREEMENT shall conform to the applicable requirements established by the following publications including latest **revisions**:

   Manual on Uniform Traffic Control Devices for Streets and Highways, U.S. Department of Transportation Federal Highway Administration

   Standard Highway Signs, U.S. Department of Transportation, Federal Highway Administration.

   A Policy on Geometric Design of Highways and Streets, American Association of State Highway and Transportation Officials (AASHTO)

   Roundabouts: An Informational Guide, Federal Highway Administration, U.S. Department of Transportation

   Florida Roundabout Guide, Florida Department of Transportation

   Florida Department of Transportation's Standard Specifications for Road and Bridge Construction.

   Florida Bicycle Facilities Planning and Design Handbook, Florida Department of Transportation

   Miami-Dade County Public Works Standard Details Manual

   Miami-Dade County Traffic Flow Modification(s)/Street Closure Procedure,

Revised January, 2009, Attachment "A," or any other comparative criteria available to municipalities as may be in existence or approved in time by the County, with the decision to elect one option or the other to be determined at the Village's discretion.

8. Notwithstanding any other term in this Agreement, nothing shall be deemed to be a waiver of either the VILLAGE or the COUNTY'S immunity or limitation of liability as provided pursuant to Section 768.28, Florida Statues, as may be amended from time to time.

9. For installation of Traffic Control Devices, the VILLAGE shall hire a COUNTY licensed contractor or perform the work in-house by the Village's Public Works crew.

10. Should the VILLAGE install street name signs at the same site where a stop-top street name sign exists, then the VILLAGE shall first install their sign on a separate post, not to interfere with any other traffic sign, other corners of the intersection may be used for the Village sign. Subsequently, the Village shall remove the County's stop-top street name signs by an approved sign contractor. All signs and hardware removed shall be dismantled and returned to the Traffic Signals and Signs Division of the County's Department of Transportation and Public Works. Street name signs installed at the intersection of two (2) local roads should be placed at the northeast or northwest corner. Village historic street name signs shall be of a design approved by DTPW. In-street pedestrian crossing signs placed on pavement shall not be metal type.

11. The VILLAGE shall be responsible for keeping records of any and all installation and repairs, and furnishing pertinent documents as and when said records may be requested by the County.

12. Either the Village or the County may, in their respective sole and complete discretion, terminate this Agreement, with or without cause and/or convenience of the terminating party, upon twenty (20) business days written notice; provided, however, the Village shall continue to maintain, repair, and be responsible for any traffic calming devices and signs installed by the Village while this Agreement was in effect. Prior to the termination of this Agreement, however, the Village may elect to remove any one or all Traffic Calming Devices installed by the Village; provided the Village shall restore the roadway and area in which the Traffic Calming Devices was located to the condition that existed before the Village's installation.

13. Upon written notification by the County, the Village shall immediately remove any Traffic Calming Device, at the Village's sole cost and expense that is not in compliance with the terms of this Agreement.

14. Any notice or communication required hereunder shall be addressed to the following:

TO COUNTY: Miami-Dade County

TO VILLAGE: Village of Palmetto Bay

IN WITNESS WHEREOF, the VILLAGE and the COUNTY have set their hands the day and year first above written.

Attest:

HARVEY RUVIN, CLERK

By: _____
County Deputy Clerk

MIAMI-DADE COUNTY

By: _____
County Mayor

Approved as to form and legal sufficiency

By: _____
Assistant County Attorney

Attest:

By: _____
Missy Arocha, Village Clerk

VILLAGE OF PALMETTO
BAY, a municipal corporation
OF the STATE OF FLORIDA

By: _____
Edward Silva, Village Manager

(AFFIX VILLAGE SEAL)

Approved as to form and legal sufficiency:

By: _____
Dexter W. Lehtinen, Village Attorney

EXHIBIT "A"

RESOLUTION NO. 2016-69

A RESOLUTION OF THE MAYOR AND VILLAGE COUNCIL OF THE VILLAGE OF PALMETTO BAY, FLORIDA; RELATING TO AGREEMENTS; AUTHORIZING THE VILLAGE MANAGER TO EXECUTE AN INTERGOVERNMENTAL AGENCY AGREEMENT WITH MIAMI-DADE COUNTY, IN SUBSTANTIALLY THE ATTACHED FORM, TO PERFORM CERTAIN TRAFFIC ENGINEERING FUNCTIONS AND TO ALLOW THE VILLAGE OF PALMETTO BAY TO INSTALL AND MAINTAIN CERTAIN TRAFFIC CONTROL DEVICES AND SIGNS WITHIN LOCAL MUNICIPAL STREETS OPERATED AND MAINTAINED BY THE VILLAGE; AND PROVIDING FOR AN EFFECTIVE DATE. (Sponsored by Administration)

WHEREAS, Village of Palmetto Bay ("Village") residents are concerned about vehicles speeding and cut-through traffic traversing through their neighborhoods; therefore, desire to enter into an Intergovernmental Agreement with Miami-Dade County for the installation and maintenance of traffic calming devices; and

WHEREAS, the basis for the installation of traffic calming devices at a particular street will be based on the findings of a traffic study analysis, or by the decision of the Village Manager by a written finding that the installation of a traffic calming device is important for the preservation of the health and safety of affected residents; and

WHEREAS, Miami-Dade County, Florida, ("County") has exclusive jurisdiction over all traffic control devices in both, the incorporated and unincorporated areas of the County; and

WHEREAS, the Village is prohibited from installing and maintaining traffic calming devices, unless an Intergovernmental Agency Agreement with the County ("Intergovernmental Agreement"), is approved and executed in accordance with Section 2-96.1 County Code of Ordinances; and

WHEREAS, Village administration is respectfully requesting the Mayor and the Village Council of the Village of Palmetto Bay to authorize the Village Manager to enter into and execute an Intergovernmental Agency Agreement to perform engineering functions in order to proceed with installation and maintenance of traffic calming devices on local municipal streets operated and maintained by the Village; and,

WHEREAS, the Village Council finds that this Resolution authorizing execution of the Intergovernmental Agency Agreement is a crucial step in improving the flow of traffic and protecting the health, safety and welfare of residents affected by vehicles speeding and cut-through traffic traversing through the neighborhoods of the Village.

NOW, THEREFORE, BE IT RESOLVED BY THE MAYOR AND VILLAGE COUNCIL OF THE VILLAGE OF PALMETTO BAY, FLORIDA, AS FOLLOWS:

Section 1. **Recitals.** The above recitals are true and correct and are incorporated herein by this reference.

Section 2. **Approval of Agreement.** The Mayor and Village Council of the Village of Palmetto Bay hereby authorize the Village Manager to execute an Intergovernmental Agency Agreement with Miami Dade County, in substantially the form attached hereto as Exhibit "A", which will allow the Village to install and maintain traffic calming devices and signs within the local municipal streets operated and maintained by the Village.

Section 3. **Authorization of the Village Manager.** The Village Manager is authorized to take all action necessary to enter into an Intergovernmental Agency Agreement with Miami Dade County, in substantially the form attached hereto as Exhibit "A", to allow the Village to perform engineering functions that will allow the Village to install and maintain traffic calming devices and signs within the local municipal streets, in accordance with Section 2-96.1, Miami-Dade County Code of Ordinances.

Section 4. This Resolution shall become effective upon the date of its adoption herein.

PASSED and ADOPTED this 12th day of September, 2016.

Attest: _____
Missy Arocha
Village Clerk

_____
Eugene Flinn
Mayor

APPROVED AS TO FORM AND LEGAL SUFFICIENCY FOR THE USE AND RELIANCE OF THE VILLAGE OF PALMETTO BAY ONLY:

_____
Dexter W. Lehtinen
Village Attorney

EXHIBIT "B"

THIS DOCUMENT IS A SUBSTITUTION TO ORIGINAL. BACKUP ORIGINAL CAN BE SEEN AT THE END OF THIS DOCUMENT.

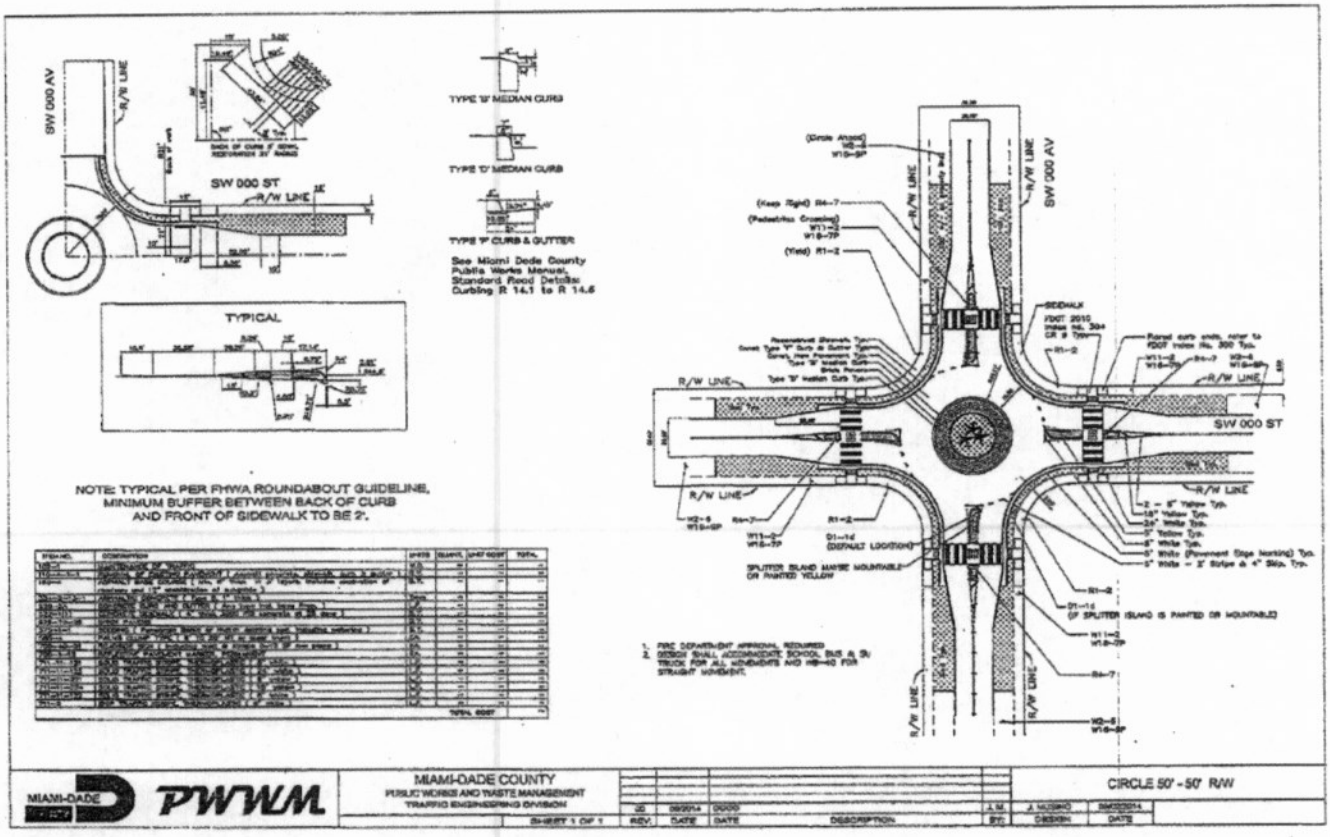

THIS DOCUMENT IS A SUBSTITUTION TO ORIGINAL. BACKUP ORIGINAL CAN BE SEEN AT THE END OF THIS DOCUMENT.

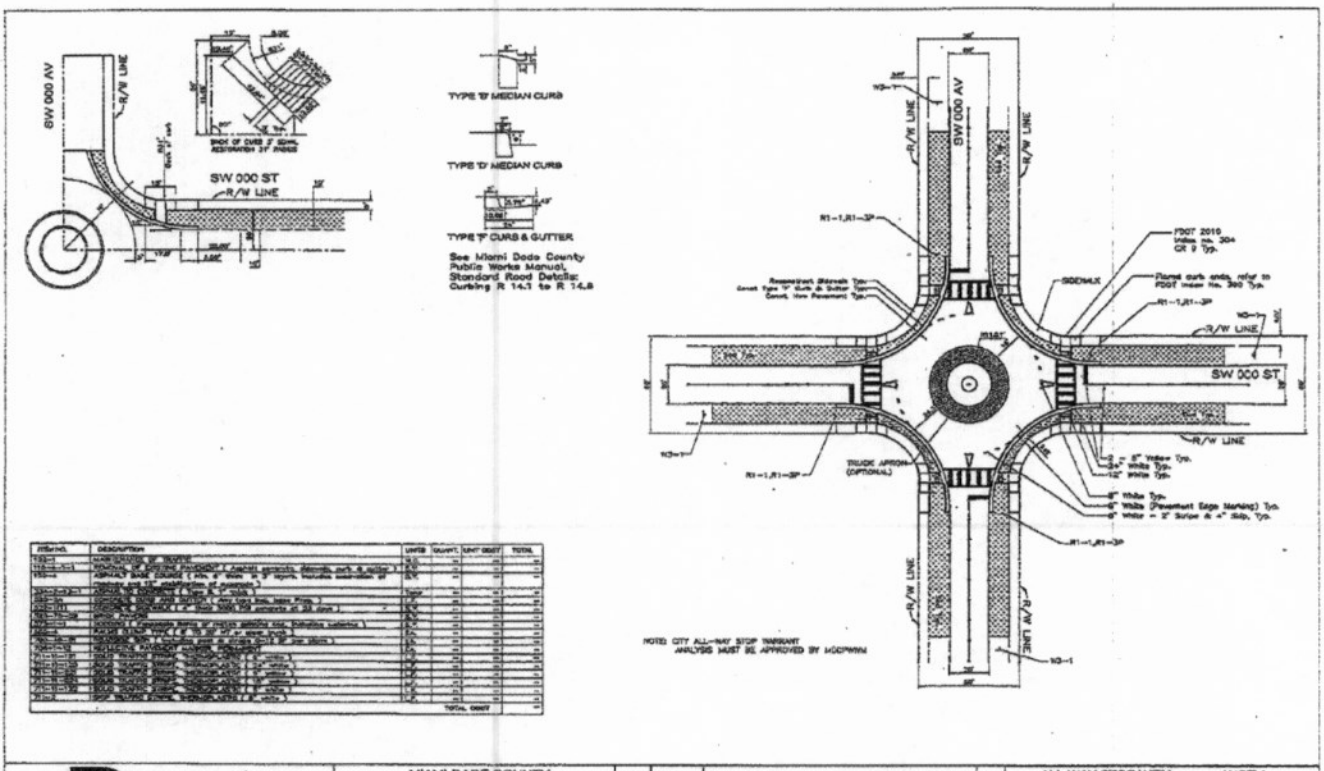

ITEM NO.	DESCRIPTION	UNITS	QUANT.	UNIT COST	TOTAL
[illegible]	[illegible]	[illegible]	[illegible]	[illegible]	[illegible]
[illegible]	[illegible]	[illegible]	[illegible]	[illegible]	[illegible]
[illegible]	[illegible]	[illegible]	[illegible]	[illegible]	[illegible]
[illegible]	[illegible]	[illegible]	[illegible]	[illegible]	[illegible]
[illegible]	[illegible]	[illegible]	[illegible]	[illegible]	[illegible]
[illegible]	[illegible]	[illegible]	[illegible]	[illegible]	[illegible]
[illegible]	[illegible]	[illegible]	[illegible]	[illegible]	[illegible]
[illegible]	[illegible]	[illegible]	[illegible]	[illegible]	[illegible]
[illegible]	[illegible]	[illegible]	[illegible]	[illegible]	[illegible]
[illegible]	[illegible]	[illegible]	[illegible]	[illegible]	[illegible]
[illegible]	[illegible]	[illegible]	[illegible]	[illegible]	[illegible]
[illegible]	[illegible]	[illegible]	[illegible]	[illegible]	[illegible]
[illegible]	[illegible]	[illegible]	[illegible]	[illegible]	[illegible]
[illegible]	[illegible]	[illegible]	[illegible]	[illegible]	[illegible]
[illegible]	[illegible]	[illegible]	[illegible]	[illegible]	[illegible]
[illegible]	[illegible]	[illegible]	[illegible]	[illegible]	[illegible]
[illegible]	[illegible]	[illegible]	[illegible]	[illegible]	[illegible]
[illegible]	[illegible]	[illegible]	[illegible]	[illegible]	[illegible]
[illegible]	[illegible]	[illegible]	[illegible]	[illegible]	[illegible]
				TOTAL COST	[illegible]

MIAMI-DADE PWWM

MIAMI-DADE COUNTY
PUBLIC WORKS AND WASTE MANAGEMENT
TRAFFIC ENGINEERING DIVISION

SHEET 1 OF 1

REV.	DATE	DATE	DESCRIPTION	BY

J. M. — DESIGN
J. PEREZ — DRAWN
DATE

ALL-WAY STOP WITH TRAFFIC CIRCLE 50'-50' RW (NOT A ROUNDABOUT)

NOT FOR USE ON COUNTY ROAD

EXHIBIT “C”

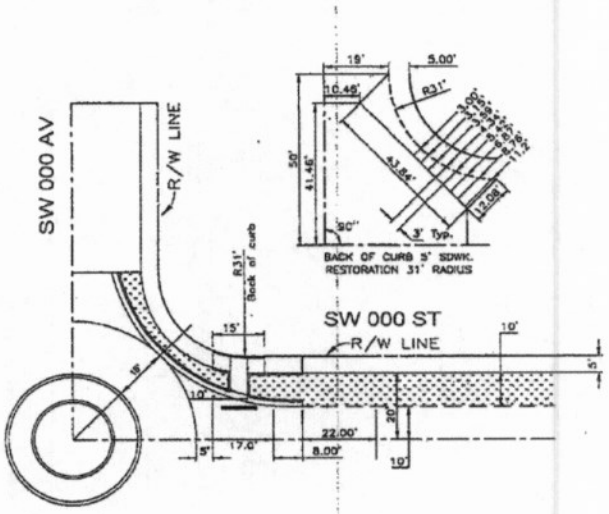

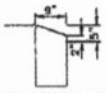

TYPE 'B' MEDIAN CURB

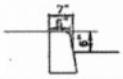

TYPE 'D' MEDIAN CURB

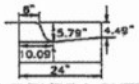

TYPE 'F' CURB & GUTTER

See Miami Dade County Public Works Manual, Standard Road Details: Curbing R 14.1 to R 14.6

Reconstruct Sidewalk
Const Type "F" Curb & Gutter
Const. New Pavement

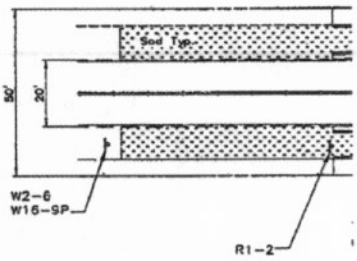

ITEM NO.	DESCRIPTION	UNITS	QUANT.	UNIT COST	TOTAL
102-1	MAINTENANCE OF TRAFFIC	W.O.	-	-	-
110-4-1-1	REMOVAL OF EXISTING PAVEMENT (Asphalt concrete, sidewalk, curb & gutter)	S.Y.	-	-	-
160-4	ASPHALT BASE COURSE (Min. 6" thick in 3" layers. Includes excavation of roadway and 12" stabilization of subgrade)	S.Y.	-	-	-
334-2-13-1	ASPHALTIC CONCRETE (Type S, 1" thick)	Tons	-	-	-
520-2A	CONCRETE CURB AND GUTTER (Any type incl. base Prep.)	L.F.	-	-	-
522-1(1)	CONCRETE SIDEWALK (4" thick 3000 PSI concrete at 28 days)	S.Y.	-	-	-
526-70-26	BRICK PAVERS	S.Y.	-	-	-
575-1-1	SODDING (Pensacola Bahia or match existing sod, including watering)	S.Y.	-	-	-
586-4	PALMS CLUMP TYPE (8' TO 20' HT or clear trunk)	EA.	-	-	-
700-40-01	ROADSIDE SIGN (including post & straps 0-12 SF see plans)	EA.	-	-	-
706-1-12	REFLECTIVE PAVEMENT MARKER, PERMANENT	EA.	-	-	-
711-11-121	SOLID TRAFFIC STRIPE, THERMOPLASTIC (6" white)	L.F.	-	-	-
711-11-125	SOLID TRAFFIC STRIPE, THERMOPLASTIC (24" white)	L.F.	-	-	-
711-11-221	SOLID TRAFFIC STRIPE, THERMOPLASTIC (6" yellow)	L.F.	-	-	-
[illegible]	[illegible]	L.F.	-	-	-

EXHIBIT C

Prepared for:

Village of Palmetto Bay

Traffic Impact Analysis for

Downtown Redevelopment Task Force

February 2015

Prepared for:

MARLIN ENGINEERING, INC.

1700 NW 66th Avenue

Suite 106

Plantation, Florida 33313

P: 305.477.7575

www.marlinengineering.com

PROFESSIONAL ENGINEER CERTIFICATE

I hereby certify that I am a registered professional engineer in the State of Florida practicing with Marlin Engineering, a corporation authorized to operate as an engineering business, by the State of Florida Department of Professional Regulation, Board of Professional Engineers, and that I have prepared or approved the evaluation, findings, opinions, conclusions, or technical advice hereby for:

PROJECT: Palmetto Bay Downtown Redevelopment Traffic Impact Analysis

LOCATION: Village of Palmetto Bay, Florida

CLIENT: Village of Palmetto Bay

I acknowledge that the procedures and references used to develop the results contained in these computations are standard to the professional practice of transportation engineering as applied through professional judgment and experience.

NAME: James E. Spinks III, PE, PTOE

P.E. NO.: 66775

DATE: February 18, 2015

SIGNATURE:

Table of Contents

1. Introduction....1
1.1. Project Description....1
1.2. Project Location....2
1.3. Traffic Impact Study Area....2
2. Data Collection....4
2.1. Traffic Count Data....4
2.1.1. Turning Movement Counts (TMC's)....4
2.1.2. 24-Hour Bi-Directional Machine Counts....6
2.1.3. Segment Traffic Volumes....6
2.2. Additional Traffic Data Collection....7
2.2.1. Signal Timing Analysis....7
2.2.2. Peak Hour Factors....7
2.2.3. Peak Season Adjustment Factors....7
2.2.4. Other Data....7
2.3. Roadway Description....7
2.4. Intersections Descriptions....8
2.4.1. Signalized Intersections....8
2.4.2. Un-signalized Intersections....8
3. Existing Conditions Analysis....10
3.1. Existing Intersection Level of Service Analysis....10
3.2. Segment Level of Service Analysis....15
4. Future Traffic Projections....17
4.1. Planned and Programmed Roadway Improvements....17
4.2. Background Traffic....19
4.3. Future Background Analysis....20
4.4. Project Traffic....44
4.4.1. Trip Generation....44
4.4.2. Trip Distribution....57
4.4.3. Trip Assignment....57
5. Future Total Traffic Analysis....76
6. Traffic Circulation & Access Review....91
6.1. Traffic Circulation & Access Analysis Summary....91
7. Conclusions and Recommendations....95

List of Tables

Table 1– Data Collection Summary....6
Table 2 – 2014 Peak Hour Intersection Conditions (A.M.-MID.-P.M.)....11
Table 3 – Segment Level of Service Thresholds....15
Table 4 – 2014 Peak Hour Roadway Volumes (A.M.-MID.-P.M.)....15
Table 5 – 2014 Peak Hour Transportation Corridor Segment Conditions (A.M.-MID.-P.M.)....16
Table 6 – 2014 Growth Analysis Summary....19
Table 7 – SERPM Growth Rate Analysis....19
Table 8 – 2025 Future Background Peak Hour Transportation Corridor Segment Conditions w/o SW 95th Ave. Link (A.M.-MID.-P.M.)....21
Table 9 – 2035 Future Background Peak Hour Transportation Corridor Segment Conditions w/o SW 95th Ave. Link (A.M.-MID.-P.M.)....21
Table 10 – 2045 Future Background Peak Hour Transportation Corridor Segment Conditions w/o SW 95th Ave. Link (A.M.-MID.-P.M.)....21
Table 11 – A.M.-MID.-P.M. Future Background Intersection Conditions w/o SW 95th Ave. Link....22
Table 12 – 2025 Future Background Peak Hour Transportation Corridor Segment Conditions w/ SW 95th Ave. Link (A.M.-MID.-P.M.)....33
Table 13 – 2035 Future Background Peak Hour Transportation Corridor Segment Conditions w/ SW 95th Ave. Link (A.M.-MID.-P.M.)....33
Table 14 – 2045 Future Background Peak Hour Transportation Corridor Segment Conditions w/ SW 95th Ave. Link (A.M.-MID.-P.M.)....33
Table 15 – A.M.-MID.-P.M. Future Background Intersection Conditions w/ SW 95th Ave. Link....34
Table 16 – Trip Generation Phase 1 (2025)....46
Table 17 – Trip Generation Phase (2035)....49
Table 18 – Trip Generation Phase 3 (2045)....51
Table 19 – Cardinal Distribution....57
Table 20 – 2025 Future Total Peak Hour Transportation Corridor Segment Conditions....77
Table 21 – 2035 Future Total Peak Hour Transportation Corridor Segment Conditions....77
Table 22 – 2045 Future Total Peak Hour Transportation Corridor Segment Conditions....77
Table 23 – A.M.-MID.-P.M. Future Total Intersection Conditions....78
Table 24 – 2025 Future Total Peak Hour Transportation Corridor Segment Conditions....80
Table 25 – 2035 Future Total Peak Hour Transportation Corridor Segment Conditions....80
Table 26 – 2045 Future Total Peak Hour Transportation Corridor Segment Conditions....80
Table 27 – A.M.-MID.-P.M. Future Total Intersection Conditions....81
Table 24 – Parking Requirement with Village of Palmetto Bay Code....93
Table 25 – Shared Parking Analysis....94

List of Figures

Figure 1 – Project Location Map....3
Figure 2 – Locations of Traffic Data Collection....5
Figure 3 - Existing Lane Configuration....9
Figure 4 – 2014 Existing Traffic (A.M. Peak Hour)....12
Figure 5 – 2014 Existing Traffic (MID. Peak Hour)....13
Figure 6 – 2014 Existing Traffic (P.M. Peak Hour)....14
Figure 7 – 2025 Background Traffic c (A.M. Peak Hour)....23
Figure 8 – 2025 Background Traffic w/o SW 95th Ave. Link (MID. Peak Hour)....24

Figure 9 – 2025 Background Traffic w/o SW 95th Ave. Link (P.M. Peak Hour) 25
Figure 10 – 2035 Background Traffic w/o SW 95th Ave. Link (A.M. Peak Hour)....26
Figure 11 – 2035 Background Traffic w/o SW 95th Ave. Link (MID. Peak Hour) 27
Figure 12 – 2035 Background Traffic w/o SW 95th Ave. Link (P.M. Peak Hour) 28
Figure 13 – 2045 Background Traffic w/o SW 95th Ave. Link (A.M. Peak Hour)....29
Figure 14 – 2045 Background Traffic w/o SW 95th Ave. Link (MID. Peak Hour) 30
Figure 15 – 2045 Background Traffic w/o SW 95th Ave. Link (P.M. Peak Hour) 31
Figure 16 – 2025 Background Traffic w/ SW 95th Ave. Link (A.M. Peak Hour) 35
Figure 17 – 2025 Background Traffic w/ SW 95th Ave. Link (MID. Peak Hour) 36
Figure 18 – 2025 Background Traffic w/ SW 95th Ave. Link (P.M. Peak Hour) 37
Figure 19 – 2035 Background Traffic w/ SW 95th Ave. Link (A.M. Peak Hour) 38
Figure 20 – 2035 Background Traffic w/ SW 95th Ave. Link (MID. Peak Hour) 39
Figure 21 – 2035 Background Traffic w/ SW 95th Ave. Link (P.M. Peak Hour) 40
Figure 22 – 2045 Background Traffic w/ SW 95th Ave. Link (A.M. Peak Hour) 41
Figure 23 – 2045 Background Traffic w/ SW 95th Ave. Link (MID. Peak Hour) 42
Figure 24 – 2045 Background Traffic w/ SW 95th Ave. Link (P.M. Peak Hour) 43
Figure 25 – AM Trip Distribution CBD Core District – Phase 1 (2025)....58
Figure 26 – Midday Trip Distribution CBD Core District – Phase 1 (2025)....59
Figure 27 – PM Trip Distribution CBD Core District – Phase 1 (2025) 60
Figure 28 – AM Trip Distribution Central Mixed Use District – Phase 2 (2035) 61
Figure 29 – Midday Trip Distribution Central Mixed Use District – Phase 2 (2035) 62
Figure 30 – PM Trip Distribution Central Mixed Use District – Phase 2 (2035) 63
Figure 31 – AM Trip Distribution Perimeter District – Phase 3 (2045) 64
Figure 32 – Midday Trip Distribution Perimeter District – Phase 3 (2045) 65
Figure 33 – PM Trip Distribution Perimeter District – Phase 3 (2045)....66
Figure 34 – AM Trip Distribution US 1 Island District – Phase 3 (2045)....67
Figure 35 - Midday Trip Distribution US 1 Island District – Phase 3 (2045)....68
Figure 36 - PM Trip Distribution US 1 Island District – Phase 3 (2045) 69
Figure 37 – AM Trip Distribution North Mixed District – Phase 3 (2045)....70
Figure 38 - Midday Trip Distribution North Mixed District – Phase 3 (2045)....71
Figure 39 - PM Trip Distribution North Mixed District – Phase 3 (2045) 72
Figure 40 – AM Trip Distribution Total - Phase 3 (2045)....73
Figure 41 – Midday Trip Distribution Total - Phase 3 (2045)....74
Figure 42 – PM Trip Distribution Total - Phase 3 (2045) 75
Figure 43 – 2025 Total Traffic (A.M. Peak Hour) 82
Figure 44 – 2025 Total Traffic (MID. Peak Hour) 83
Figure 45 – 2025 Total Traffic (P.M. Peak Hour) 84
Figure 46 – Total Traffic 2035 (A.M. Peak Hour) 85
Figure 47 – Total Traffic 2035 (MID. Peak Hour) 86
Figure 48 – Total Traffic 2035 (P.M. Peak Hour) 87
Figure 49 – Total Traffic 2045 (A.M. Peak Hour) 88
Figure 50 – Total Traffic 2045 (MID. Peak Hour) 89
Figure 51 – Total Traffic 2045 (P.M. Peak Hour) 90

List of Appendices

Appendix A – Site Plan

Appendix B – Traffic Data

Appendix C – Miami-Dade County Signal Timing Data

Appendix D – 2014 Existing Synchro Output Sheets

Appendix E – Growth Rate Analysis/Historical Traffic Data

Appendix F – 2025 Future Background Synchro Output Sheets w/o SW 95th Ave. Segment
2035 Future Background Synchro Output Sheets w/o SW 95th Ave. Segment
2045 Future Background Synchro Output Sheets w/o SW 95th Ave. Segment

Appendix G – 2025 Future Background Synchro Output Sheets w/ SW 95th Ave. Segment
2035 Future Background Synchro Output Sheets w/ SW 95th Ave. Segment
2045 Future Background Synchro Output Sheets w/ SW 95th Ave. Segment

Appendix H – Trip Generation Analysis Data

Appendix I – Cardinal Distribution

Appendix J – 2025 Future Total Synchro Output Sheets
2035 Future Total Synchro Output Sheets
2045 Future Total Synchro Output Sheets

Appendix K – 2025 Future Total Synchro Output Sheets, with Improvement
2035 Future Total Synchro Output Sheets, with Improvement
2045 Future Total Synchro Output Sheets, with Improvement

EXECUTIVE SUMMARY

The purpose of this report is to document the results of the Traffic Impact Analysis for the DOWNTOWN REDEVELOMPENT of the "Village of Palmetto Bay", located between SW 174th Street and SW 184th Street along US-1 and SW 97th Avenue in Palmetto Bay, Florida. The proposed project consists of residential and retail/office land uses, to be built in three development phases occurring in 2025, 2035 and 2045. This traffic impact study analyzed the transportation corridor segments and intersections in accordance with the Village of Palmetto Bay requirements and approved methodology, which specified an analysis of existing conditions, future conditions without the downtown project (background traffic) and future conditions with the downtown project (total traffic).

Results of the existing intersection and segment analysis demonstrate that the intersections and segments operate above the adopted levels of service during the peak hours, with exception to:

- SW 97th Avenue at US-1/Evergreen Street (A.M. peak hour)
- US-1 at Wayne (A.M. and P.M. peak hours)
- US-1 at E Indigo Street (A.M., midday and P.M. peak hours)

The Village of Palmetto Bay staff recognizes the projected capacity challenges represented along 97th Avenue and has proposed construction of a parallel facility along SW 95th Avenue to alleviate congestion. Therefore, future analyses were performed both with the proposed SW 95th Avenue segment.

Results of the future background intersection and segment analysis **"without"** the proposed SW 95th Avenue demonstrate that the intersections and segments operate above the adopted levels of service during the peak hours, with exception to:

- SW 97th Avenue (2025, 2035 and 2045 - A.M. peak period)
- US-1 (2045 - A.M peak period)
- SW 97th Avenue at US-1/Evergreen Street (2025, 2035 and 2045 - A.M. peak period)
- US-1 at Wayne Avenue (2025, 2035 and 2045 - A.M. and P.M. peak periods)
- US-1 at E Indigo Street (2025, 2035 and 2045 - A.M., midday and P.M. peak periods)

Results of the future background intersection and segment analysis **"with"** the proposed SW 95th Avenue demonstrates that the intersections and segments operate above the adopted levels of service during the peak hours, with exception to:

- US-1 (2025, 2035 and 2045 - A.M. period)
- SW 97th Avenue at US-1/Evergreen Street (2045 - A.M. peak period)
- US-1 at Wayne Avenue (2025 - A.M. and P.M. peak periods) (2035, 2045 - A.M., midday and P.M. peak periods)
- US-1 at E Indigo Street (2025, 2035 and 2045 - A.M., midday and P.M. peak periods)
- SW 184th Street at SW 95th (2025, 2035 and 2045 - A.M. and P.M. peak periods)

As expected, in general delay times are reduced and level of service is improved along SW 97th Avenue and at each of the study intersections with the proposed SW 95th Avenue segment in the network.

Results of the future total traffic intersection and segment analysis with the proposed SW 95th Avenue demonstrates that the intersections and segments operate above the adopted levels of service during the peak hours, with exception to:

- US-1 (2045 - A.M peak period)
- SW 97th Avenue at US-1/ Evergreen Street (2025 and 2035 - A.M. peak period) (2045 - A.M. and P.M. peak periods).
- US-1 at Wayne (2025 - A.M. and P.M. peak periods) (2035 and 2045 – A.M., midday and P.M. peak periods)
- US-1 at E Indigo Street (2025, 2035 and 2045 - A.M., midday and P.M. peak periods)
- US-1 at SW 184 (2035 - A.M. and P.M. peak periods) (2045 - A.M., midday and P.M. peak periods)
- SW 184th Street at SW 95th Avenue (2025 -A.M. and P.M. peak periods) (2035 and 2045 - A.M., midday and P.M. peak periods)
- SW 184th Street at SW 97th Avenue (2045 - P.M. peak period)

To mitigate the impacts created by the additional project traffic, both network and intersection cycle lengths were optimized for future total traffic conditions along with geometric improvements, as follows:

1. US-1 at SW 184th Street
    a. Add EB thru, left-turn and right-turn lane
    b. Add WB thru and right-turn lane
    c. Add NB right-turn lane
    d. Add SB dual right-turn lane
2. US-1 at Evergreen/97th Avenue
    a. Add EB dual right-turn lanes
    b. Add NB left-turn, thru lane and free-flow right-turn lane
    c. Add SB thru lane
3. US-1 at Indigo Street
    a. Install signal
4. US-1 at Wayne Street
    a. Install signal
5. SW 184th Street at SW 95th Avenue
    a. Install signal
6. SW 184th Street at SW 97th Avenue
    a. Add EB and WB thru lane

After implementation of the improvements, the intersection level of service analysis for future total traffic conditions with intersection improvements showed that each of the intersections performed above the

adopted level of service standards, as compared to the future conditions without project traffic during the AM, midday and PM peak hour, with exception to:

- US-1 2045 – A.M. peak period)
- US-1 at SW 184th Street (2045 – A.M. peak period)

In conclusion, the results of this study demonstrate that in general the traffic generated by the proposed development project can be accommodated on the existing roadway network and levels of service expected without the project can be maintained upon the addition of project-generated traffic with negligible intersection improvements. However, it is recommended that the Village of Palmetto Bay coordinate with FDOT District Six and Miami Dade Public Works Division to further evaluate a long term improvement concepts at the US-1 at SW 184th intersection.

In addition, this study also suggest a series of improvements encouraging people travel to and from the project to use public transportation as well as promoting bicycling and walking, including:

- Installation of on-site bicycle racks or parking stations
- Provide transit information stations within the site including route schedules and maps
- Provide other transit-oriented amenities
- Design/construct the site in a bicycle/pedestrian - and transit-friendly fashion

1. Introduction

The purpose of this report is to document the results of the Traffic Impact Analysis for the DOWNTOWN REDEVELOMPENT of the "Village of Palmetto Bay", located between SW 174th Street and SW 184th Street along US-1 and SW 97th Avenue in Palmetto Bay, Florida. The proposed project consists of Residential and potential Retail/ Office land uses.

Since incorporation in 2002, the residents of Palmetto Bay have envisioned a thriving downtown district in the Village's southwest corner surrounding US-1. This area, now known as the Franjo Triangle & Island or the FT&I district, has been long overdue for a positive transformation that befits the Palmetto Bay community. The group is focusing on transforming the existing business district into an attractive downtown district, and to expand services for the Palmetto Bay residents with an eye on enhancing the Village's overall financial viability now and well into the future.

Marlin Engineering, Inc. has completed this traffic impact analysis for submittal to the Village of Palmetto Bay. The purpose of the study is to assess the project's impact on the surrounding transportation network and determine if adequate capacity is available to support future demand.

The study's methodology is consistent with the requirements outlined by the Village of Palmetto Bay for traffic impact analysis. This report summarizes the data collection, project trip generation and distribution, and capacity analysis. An initial methodology meeting was conducted with Village of Palmetto Bay.

The following sections summarize the results of the traffic study, and provide a list of options to be considered to mitigate any potential impacts of the project.

1.1. Project Description

This project will be built in three development phases; and projected opening will occur in 2025, 2035 and 2045 respectively. The development consists of multi-family residential uses, as well as potential retail/office component, as follows:

<u>Phase 1 (Year 2025)</u>

- CBD Core District:
  - 1,320 Multi-family Residential Units
  - 132 ksf Retail/Office

<u>Phase 2 (Year 2035)</u>

- Central Mixed Use District:
  - 745 Multi-family Residential Units
  - 53.426 ksf Retail/Office

Phase 3 (Year 2045)

- Perimeter District:
  - 450 Multi-family Residential Units
  - 268.86 ksf Retail/Office
- North Mixed Use District:
  - 550 Multi-family Residential Units
  - 286.015 ksf Retail/Office
- US 1 Island District:
  - 2,324 Multi-family Residential Units
  - 826.246 ksf Retail/Office

The project site plan is included in **Appendix A**.

1.2. Project Location

The project site is located between SW 174th Street and SW 184th Street along US-1 and SW 97th Avenue in Palmetto Bay, Florida. **Figure 1** depicts the general location of the downtown redevelopment site and the study area.

1.3. Traffic Impact Study Area

The project site is limited to US-1 to the west, SW 97th Avenue to de east, SW 184th Street to the south, and SW 174th Street to the north, as shown in **Figure 1**. Since the proposed site is easily accessed via the regional roadway system, the area of influence, where most of the traffic entering and exiting the project will be concentrated, is limited to adjacent roadways and intersections in close proximity to the site.

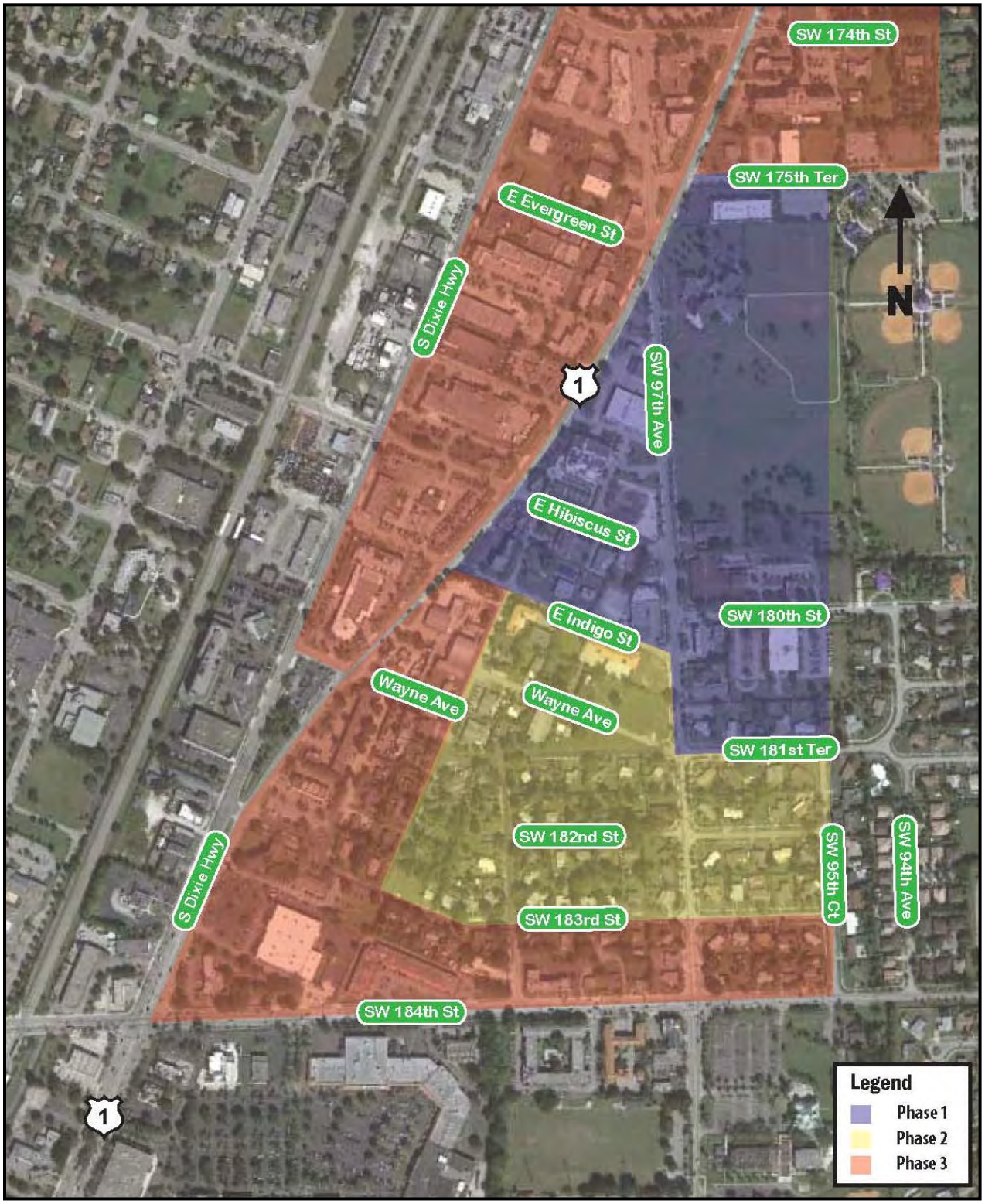

Figure 1 – Project Location Map

2. Data Collection

2.1. Traffic Count Data

As part of a preliminary study of the existing conditions, traffic data were collected on the defined intersections within the project study area. The traffic volume data includes six-hour intersection turning movement volumes, during the A.M., MID., and P.M. peak hours. Locations of the traffic data collection are shown on **Figure 2.**

2.1.1. Turning Movement Counts (TMC's)

Turning movement counts (TMC's) were collected during the A.M. (7:00–9:00), MID. (11:00–1:00) and P.M. (4:00–6:00) peak period on a typical weekday within the determined traffic study area and listed below:

- SW 97th Avenue at SW 174th Street
- SW 97th Avenue at US-1 at Evergreen Street
- SW 97th Avenue at Hibiscus Street
- SW 97th Avenue at SW 180th Street
- SW 97th Avenue at E Indigo Street
- SW 97th Avenue at SW 181st Terrace
- SW 97th Avenue and SW 182nd Street
- SW 97th Avenue and SW 183rd Street
- SW 97th Avenue and SW 184th Street
- SW 95th Court at SW 184th Street
- US-1 at SW 184th Street
- US-1 at Wayne Avenue
- US-1 at E Indigo Street

The collected turning movement counts were converted to average turning movement volumes by applying a peak season conversion factor (PSCF). The peak season conversion factors were obtained from the 2013 Florida Traffic Information & Highway Online. The data collection date and corresponding peak season conversion factors are shown in **Table 1**. Turning movement counts, 24-hour volume counts, and peak season conversion factors are provided in **Appendix B**.

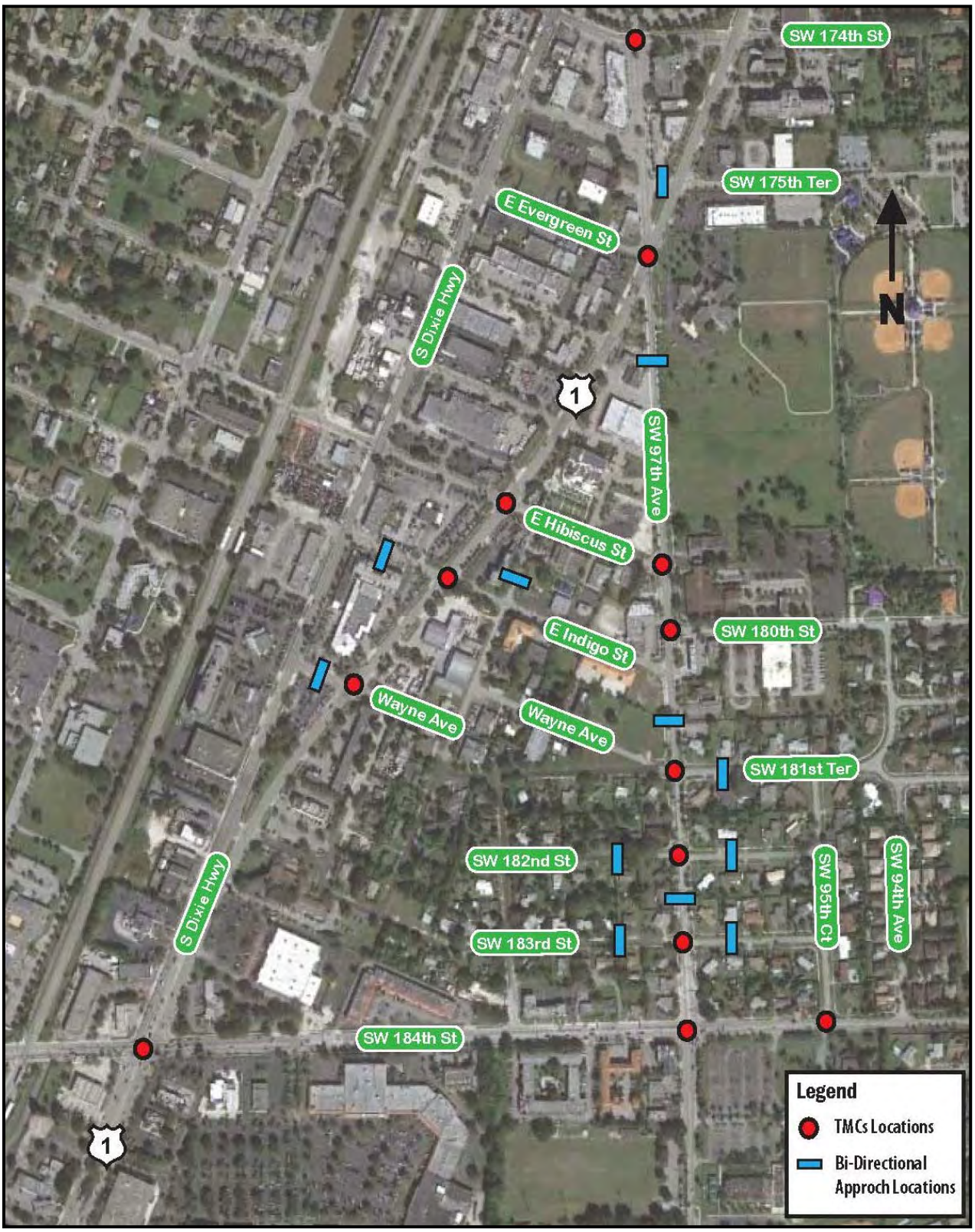

Figure 2 – Locations of Traffic Data Collection

Table 1– Data Collection Summary

Intersection	Date	Peak Season Factor
SW 97th Avenue at SW 174th Street	2/13/2014	1.00
SW 97th Avenue at US-1 at Evergreen Street	2/13/2014	1.00
SW 97th Avenue at Hibiscus Street	2/12/2014	1.00
SW 97th Avenue at SW 180th Street	2/12/2014	1.00
SW 97th Avenue at E Indigo Street	2/12/2014	1.00
SW 97th Avenue at SW 181st Terrace	2/11/2014	1.00
SW 97th Avenue at SW 182nd Street	2/11/2014	1.00
SW 97th Avenue at SW 183rd Street	2/11/2014	1.00
SW 97th Avenue at SW 184th Street	2/11/2014	1.00
SW 95th Court at SW 184th Street	2/12/2014	1.00
US-1 at SW 184th Street	2/13/2014	1.00
US-1 at Wayne Avenue	2/12/2014	1.00
US-1 at E Indigo Street	2/12/2014	1.00

2.1.2. 24-Hour Bi-Directional Machine Counts

24-Hour Bi-Directional Machine Counts were collected during a typical weekday (Tuesday, Wednesday and Thursday) at the following locations:

- SW 97th Avenue, north of SW 181st Terrace
- SW 97th Avenue, between SW 183rd Street and SW 182nd Street
- SW 97th Avenue, north of E Guava Street
- SW 98th Avenue Rd., north of E Indigo Street
- SW 175th Terrace, between US-1 and SW 97th Avenue
- SW 181st Terrace, between SW 97th Avenue and SW 95th Court
- SW 182nd Street, between SW 97th Avenue and SW 95th Court
- SW 182nd Street, between SW 98th Avenue Rd. and SW 97th Avenue
- SW 183rd Street, between SW 97th Avenue and SW 95th Court
- SW 183rd Street, between SW 98th Avenue Rd. and SW 97th Avenue
- E Indigo Street, between SB and NB US-1
- Wayne Avenue, between SB and NB US-1

2.1.3. Segment Traffic Volumes

Segment traffic volumes for the morning (A.M.), midday (MID.) and afternoon (P.M.) peak period will be calculated from the intersection turning movement counts (TMCs).

2.2. Additional Traffic Data Collection

2.2.1. Signal Timing Analysis – Existing signal timing and phasing was obtained from the Miami-Dade County Advanced Traffic Management System (ATMS) Website, and is included in **Appendix C**.

2.2.2. Peak Hour Factors – A peak hour factor was used for hourly variation of the traffic flow in the peak period, as prescribed by the Florida Department of Transportation (FDOT) within the Quality/Level of Service Handbook. The peak hour factors for each intersection were obtained from the collected turning movement counts.

2.2.3. Peak Season Adjustment Factors – These factors will be used to adjust raw counts to reflect average annual for typical weekday and weekday conditions. These factors will be obtained from the FDOT Florida Traffic Online (2013) or latest available. The peak seasonal factor report is included in **Appendix B**.

2.2.4. Other Data - In addition to the traffic data counts, existing characteristics of the roadway network including intersection geometry, lane geometry and posted speed limits within the traffic study area were verified.

2.3. Roadway Description

The following sections describe the physical characteristics of the roadways within the traffic impact area.

- **US-1** – Six-lane divided state road, running in the northeast-southwest direction, serving as the western border of the study site. The posted speed limit in the vicinity of the project is 45 mph.

- **SW 97th Avenue/Franjo Road** – Two-lane undivided road, running in a north-south direction. The posted speed limit in the vicinity of the project is 30 mph.

- **SW 174th Street** – Two-lane undivided road, running in the east-west direction and serves as the northern border of the study site. The posted speed limit in the vicinity of the project is 30 mph.

- **SW 184th Street** – Four-lane undivided road, running east-west direction and serves as the southern border of the study site. The posted speed limit is 40 mph.

- **SW 95th Court** – Two-lane undivided road, running in the north-south direction from SW 184th Street to SW 181st Terrace. The posted speed limit in the vicinity of the project is 30 mph.

- **E Hibiscus Street** – Two-lane undivided road, running in the northwest-southeast direction. The posted speed limit in the vicinity of the project is 30 mph.

- **E Indigo Street** – Two-lane undivided road, running in the northwest-southeast direction. The posted speed limit in the vicinity of the project is 30 mph.

- **Wayne Avenue** – Two-lane undivided road, running in the northwest-southeast direction. The posted speed limit in the vicinity of the project is 30 mph.

- **SW 183rd Street** – Two-lane undivided road, running in the west-east direction. The posted speed limit in the vicinity of the project is 30 mph.

- **SW 182nd Street** – Two-lane undivided road, running in the west-east direction. The posted speed limit in the vicinity of the project is 30 mph.

- **SW 181st Terrace** – Two-lane undivided road, running in the west-east direction. The posted speed limit in the vicinity of the project is 30 mph.

- **SW 180th Street** -Two-lane undivided road, running in the west-east direction. The posted speed limit in the vicinity of the project is 30 mph.

2.4. Intersections Descriptions

There are 3 signalized intersections and 10 un-signalized intersections located within the project study area, as listed below. The lane configurations for the intersections within the study area are provided in **Figure 3**.

2.4.1. Signalized Intersections

1. SW 97th Avenue at US-1 at Evergreen Street
2. SW 97th Avenue and SW 184th Street
3. US-1 at SW 184th Street

2.4.2. Un-signalized Intersections

1. SW 97th Avenue at SW 174th Street
2. SW 97th Avenue at Hibiscus Street
3. SW 97th Avenue at SW 180th Street
4. SW 97th Avenue at E Indigo Street
5. SW 97th Avenue at SW 181st Terrace
6. SW 97th Avenue and SW 182nd Street
7. SW 97th Avenue and SW 183rd Street
8. SW 95th Court at SW 184th Street
9. US-1 at Wayne Avenue
10. US-1 at E Indigo Street

Figure 3 - Existing Lane Configuration

3. Existing Conditions Analysis

Analysis of existing traffic conditions were performed for the A.M., MID. and P.M. peak hour conditions on the roadway segments within the study area. The Florida Department of Transportation (FDOT) Generalized Level of Service (LOS) Tables were used to identify the vehicular capacity on the roadway segments. Intersection Levels of Service were determined for the A.M., MID. and P.M. peak period conditions using Synchro, based on the procedures of the Highway Capacity Manual (HCM) at all intersections within the study area. The levels of service thresholds used for the analysis are based on the "Generalized" tables for Urbanized Areas within the FDOT Level of Service Handbook, for the Miami-Dade County adopted threshold, which is Level of Service "E".

Level of Service is a quality measure describing operational conditions within a traffic stream, generally in terms of such service measures as speed and travel time, freedom to maneuver, traffic interruptions, and comfort and convenience.

Six (6) LOS are defined for each type of facility that have HCM analysis procedures available. Letters designate each level, from A to F, with LOS A representing the best operating conditions and LOS F the worst. Each Level of Service represents a range of operating conditions and the driver's perception of those conditions. Safety is not included in the measures that establish service levels. Eight (8) LOS are defined for each intersection analyzed using ICU procedures. Letters designate each level, ranging from A to H. Similar to the HCM method, LOS A signifies that an intersection has no congestion and LOS H represents an intersection that is over capacity.

3.1. Existing Intersection Level of Service Analysis

A.M., MID., and P.M. peak hour capacity analysis were performed for the study intersections. **Table 2** presents the results of the peak hour capacity analysis. As shown in the table, the intersection of SW 97th Avenue at US-1 and Evergreen Street currently operate below the adopted Level of Service during the A.M. peak hour. The US-1 at Wayne Avenue intersection currently operates at a LOS F during the A.M. and P.M. peak hours and the intersection of US-1 at E Indigo Street operates at LOS F during all the analysis periods. The remaining study intersections operate above the adopted Level of Service during all analysis periods. The existing intersection Level of Service Analysis results at the study intersections are shown in **Figures 4** through **6.** Detailed information from the intersection capacity analysis is included in **Appendix D**.

Table 2 – 2014 Peak Hour Intersection Conditions (A.M.-MID.-P.M.)

Intersection	Peak Hour Overall Level of Service					
	LOS			Delay (secs.)		
	A.M.	MID.	P.M.	A.M	MID.	P.M.
SW 97th Avenue at SW 174th Street (Unsignalized)*	A	A	A	8.6	8.8	9.2
SW 97th Avenue at US-1 at Evergreen Street (Signalized)	F	C	C	97.7	29.7	35.0
SW 97th Avenue at Hibiscus Street (Unsignalized)*	B	A	B	10.0	9.7	10.2
SW 97th Avenue at SW 180th Street (Unsignalized)*	B	B	B	14.3	11.6	12.9
SW 97th Avenue at E Indigo Street (Unsignalized)*	B	B	B	10.0	10.1	10.8
SW 97th Avenue at SW 181st Terrace (Unsignalized)*	B	B	B	14.6	12.2	13.7
SW 97th Avenue at SW 182nd Street (Unsignalized)*	B	B	B	14.0	11.4	13.0
SW 97th Avenue at SW 183rd Street (Unsignalized)*	B	B	C	12.2	12.0	15.8
SW 97th Avenue at SW 184th Street (Signalized)	C	C	C	32.5	29.0	32.6
SW 184th Street and SW 95th Court (Unsignalized)*	C	C	D	22.6	17.3	30.2
US-1 at SW 184th Street (Signalized)	D	D	D	54.2	46.5	53.5
US-1 at Wayne Avenue (Unsignalized)*	F	D	F	70.2	34.6	59.7
US-1 at E Indigo Street (Unsignalized)*	F	F	F	185.0	111.5	105.8

*Overall Intersection LOS not provided for two-way stop-controlled Intersections. The worst minor street movement is Indicated.

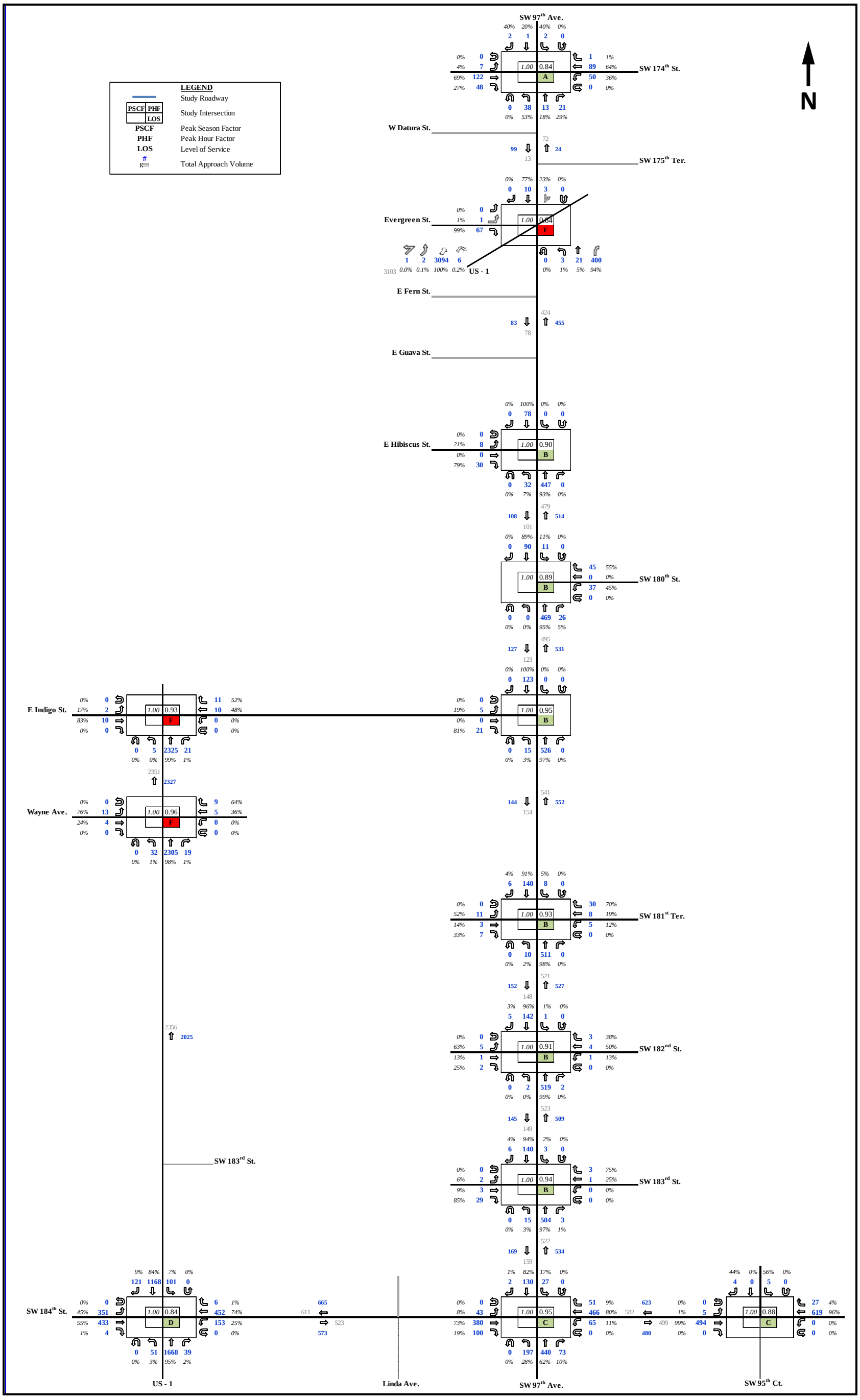

Figure 4 – 2014 Existing Traffic (A.M. Peak Hour)

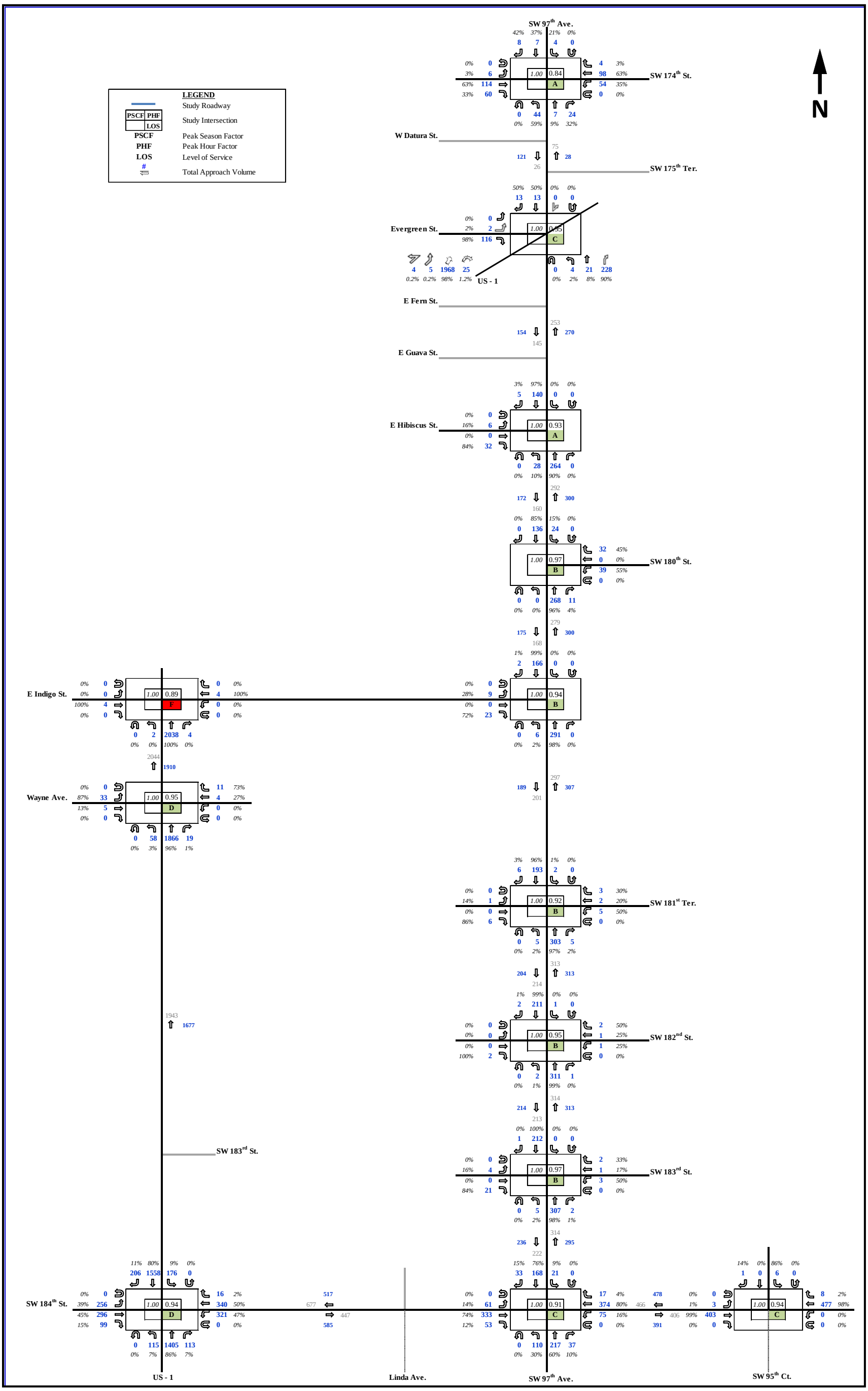

Figure 5 – 2014 Existing Traffic (MID. Peak Hour)

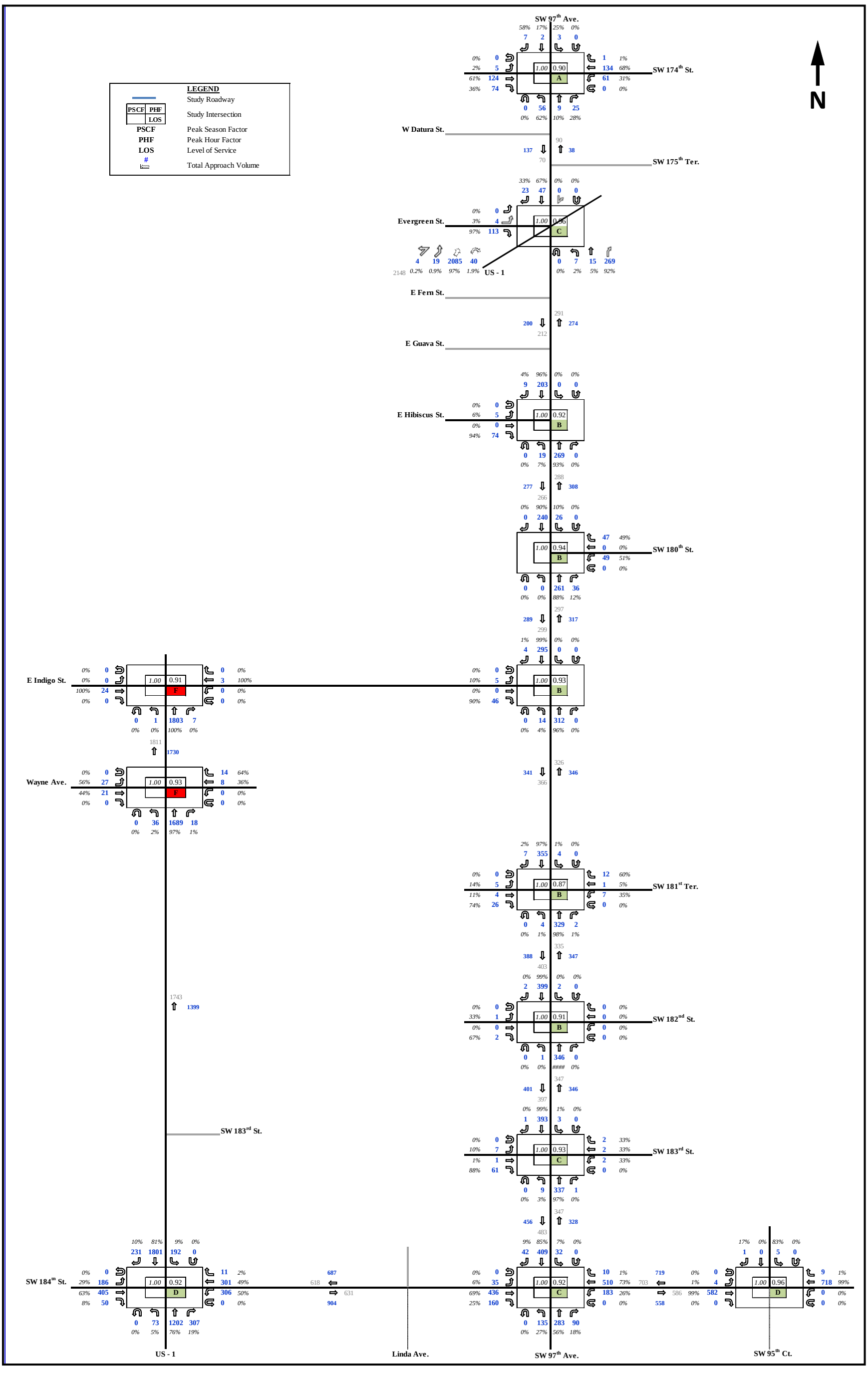

Figure 6 – 2014 Existing Traffic (P.M. Peak Hour)

3.2. Segment Level of Service Analysis

Existing conditions were examined to determine current Level of Service for the study segments. The segment Level of Service thresholds, measured in volume (v) to capacity (c) ratios, were developed from the 2013 FDOT Quality/Level of Service Handbook, as summarized in **Table 3** and included in **Appendix B**. The peak hour directional traffic for the study segments were obtained from the collected A.M., MID., and P.M. turning movement counts, as presented in **Table 4.**

Table 3 – Segment Level of Service Thresholds

LOS	US-1(3)		SW 97th Ave. / Franjo Rd. (4)		SW 184th St. (5)	
	Peak Hour Directional Volumes Thresholds	V/C Ratio	Peak Hour Directional Volumes Thresholds	V/C Ratio	Peak Hour Directional Volumes Thresholds	V/C Ratio
A	(1)	(1)	(1)	(1)	(1)	(1)
B	(1)	(1)	(1)	(1)	(1)	(1)
C	3528	0.97	266	0.46	1633	0.96
D	3624	1.00	540	0.94	1710	1.00
E	(2)	(2)	576	1.00	(2)	(2)
F	(2)	(2)	-	>1.00	(2)	(2)

(1) Cannot be archivied per Table 7 from FDOT's 2013 Quality/Level of Service Handbook

(2) Not applicable for that Level of Service letter grade

(3) From FDOT's 2013 Quality/Level of Service Handbook - Class I / Generalized LOS Tables (with One-Way Facility Adjustments of 1.2)

(4) From FDOT's 2013 Quality/Level of Service Handbook - Class II / Generalized LOS Tables (with Non-State Signalized Roadways Adjustments of - 10% and Median and Turn Lane Adjustments of -20% for Undivided with not Exclusive Left/Right Lanes)

(5) From FDOT's 2013 Quality/Level of Service Handbook - Class I / Generalized LOS Tables (with Median and Turn Lane Adjustments of -5% for Undivided with Exclusive Left Lanes)

Table 4 – 2014 Peak Hour Roadway Volumes (A.M.-MID.-P.M.)

Principal Roadway		Peak Hour Roadway Volumes			Peak Hour Vehicular Capacity*
		A.M.	MID.	P.M.	
US-1	NEB	3103	2044	2148	3624
SW 97th Ave. / Franjo Rd.	NB	552	314	347	576
	SB	169	236	483	576
SW 184th St.	EB	573	585	904	1710
	WB	665	677	719	1710

(*) Peak hour capacity derived from FDOT's 2013 Quality/Level of Service Handbook

The results of the segment Level of Service analysis are presented in **Table 5**. As indicated in this table, the study segments currently operate at acceptable Levels of Service during all the study periods.

Table 5 – 2014 Peak Hour Transportation Corridor Segment Conditions (A.M.-MID.-P.M.)

Principal Roadway		Peak Hour Roadway Volumes (V)			Peak Hour Vehicular Capacity* (C)	Peak Hour Excess Capacity			Peak Hour Level of Service					
		A.M.	MID.	P.M.		A.M.	MID.	P.M.	A.M.		MID.		P.M.	
									V/C	LOS	V/C	LOS	V/C	LOS
US-1	NEB	3103	2044	2148	3624	521	1580	1476	0.86	C	0.56	C	0.59	C
SW 97th Ave. / Franjo Rd.	NB	552	314	347	576	24	262	229	0.96	E	0.55	D	0.60	D
	SB	169	236	483	576	407	340	93	0.29	C	0.41	C	0.84	D
SW 184th St.	EB	573	585	904	1710	1137	1125	806	0.34	C	0.34	C	0.53	C
	WB	665	677	719	1710	1045	1033	991	0.39	C	0.40	C	0.42	C

(*) Peak hour capacity derived from FDOT's 2013 Quality/Level of Service Handbook

4. Future Traffic Projections

The Village of Palmetto Bay staff recognizes the projected capacity challenges represented along 97th Avenue and has proposed construction of a parallel facility along SW 95th Avenue to alleviated congestion. This proposed new facility would run in the north-south direction, connecting to US 1, just north of SW 174th Street down to SW 184th Street, south of the proposed development. Therefore, future background and future total traffic projections within the study area were performed for future years 2025, 2035 and 2045 for three (3) scenarios, as follows:

a) Background traffic without (w/o) the proposed SW 95th Avenue Segment
b) Background traffic with (w/) the proposed SW 95th Avenue Segment
c) Total traffic which includes background traffic with the proposed SW 95th Avenue corridor, plus project traffic

The purpose of the analysis is to isolate the impacts of the traffic associated with the project from traffic due to population growth and construction of new developments.

The following sections describe the process used to determine future roadway improvements planned by the City, County, and state agencies; the methodology used to estimate background traffic; traffic from committed developments; and trips associated with the proposed site.

4.1. Planned and Programmed Roadway Improvements

Programmed (funded and/or committed) transportation improvements within the traffic impact study area were collected using Florida Department of Transportation (FDOT) five year work program, Miami-Dade County's Metropolitan Planning Organization (MPO) Transportation Improvement Program (TIP) and the 2035 Long Range Transportation Plan (LRTP). There was no capacity improvement projects funded for construction prior to or on the proposed project site phased opening years, planned for 2025, 2035 and 2045.

FDOT 5-Year Work Program

Project Summary

Transportation System: INTRASTATE STATE HIGHWAY — District 06 - Miami-Dade County
Description: SR 5/US-1/S DIXIE FROM SW 136 STREET TO SW 184 STREET
Type of Work: LANDSCAPING — View Scheduled Activities
Item Number: 435828-1
Length: 3.405 — View Map of Item

Project Detail

Fiscal Year:	2015	2016	2017	2018	2019
Maintenance/Bridge/Roadway/Contract Maintenance					
Amount:	$90,000				

Project Summary

Transportation System: INTRASTATE STATE HIGHWAY — District 06 - Miami-Dade County
Description: SR 5/US-1/S. DIXIE FROM N OF SW 184 STREET TO S OF SW 168 STREET
Type of Work: RESURFACING — View Scheduled Activities
Item Number: 428487-2
Length: 1.028 — View Map of Item

Project Detail

Fiscal Year:	2015	2016	2017	2018	2019
Highways/Preliminary Engineering					
Amount:	$275,000				
Highways/Construction					
Amount:				$1,441,663	
Item Total:	$275,000			$1,441,663	

Project Summary

Transportation System: INTRASTATE STATE HIGHWAY — District 06 - Miami-Dade County
Description: SR 5/US-1/S. DIXIE FROM SOUTH OF SW 112 AVE TO N OF SW 184 ST/EUREKA
Type of Work: RESURFACING — View Scheduled Activities
Item Number: 429188-1
Length: 2.155 — View Map of Item

Construction Contract Information

Notice to Proceed Date	Work Begun Date	Present Contract Days	Contract Days Used	Percent Days Used
05/08/2014	05/27/2014	220	160	72.73%

Vendor Name: GENERAL ASPHALT CO., INC.

Project Detail

Fiscal Year:	2015	2016	2017	2018	2019
Highways/Preliminary Engineering					
Amount:	$273				
Highways/Railroad & Utilities					
Amount:	$4,822				
Highways/Construction					
Amount:	$181,773				
Highways/Contract Incentives					
Amount:	$100,000				
Item Total:	$286,868				

Miami Dade County MPO Transportation Improvement Program (TIP)

XA20003	US 1 Express Lanes	17.0	PD&E Study	p. 4-38, C-40*	9,968	8,159	Activity /Phase	Funding Source	Proposed Funding (in $000s)				
20003	SW 344 Street SW 88 Street								2014 - 2015	2015 - 2016	2016 - 2017	2017 - 2018	2018 - 2019
	Project will need a CDMP amendment prior to proceeding to construction.						PLN	MDX	1,809	0	0	0	0

PW20040349	SW 176 Street	Bike Lane	Curb & Gutter, Traffic Operational Improv.		5,337	1,830	Activity /Phase	Funding Source	Proposed Funding (in $000s)				
20040349	US - 1 SW 107 Avenue	1	Prior Years' Funding as follows: $530,000 for PE, $1,300,000 for CST.	p. 4-30					2014 - 2015	2015 - 2016	2016 - 2017	2017 - 2018	2018 - 2019
							CST	PTP	2,000	1,507	0	0	0

Miami Dade County MPO Long Range Transportation Plan (LRTP)

MAP ID	Project	Limits From	Limits To	Description	Total Capital Cost Funded via TIP	Total Capital Cost (2013 $)	Project Costs Funded via 2040 Plan
20	US-1 Managed Lanes***	SW 344 St (Palm)	Dadeland South Metrorail Station	Add 2/1 reversible new managed lanes within the ROW of the Busway	$1,800	$367,000	$139,700

Bolded phase funds are included in the 2015/2019 Miami-Dade TIP
* denotes portions of phase values are included in both the TIP and 2040 Plan
*** denotes Operations and Maintenance is funded via MDT system efficiencies
**** Project would require amendment of the Miami-Dade County Comprehensive Plan Development Master Plan

Project	Limits From	Limits To	Description	Total Capital Cost (2013 $)
West Kendall Transit Terminal Improvements	SW 88 St (Kendall)/ SW 162 Ave		Improve bus hub add kiss-and-ride, expand parking	$12,500

Project	Limits From	Limits To	Description	Total Capital Cost (2013 $)	Cost to Complete Construction 2041-2050 (YOE $)
Partially Funded Projects - Illustrative Project Candidates					
US-1 Busway - Managed Lanes	SW 344 St (Palm)	Dadeland South Metrorail Station	Add new managed lanes within the right-of-way of the US-1 Busway	$367,000	$828,500

4.2. Background Traffic

Background traffic was calculated to account for committed traffic and growth in the area. Future background traffic for this study was developed by applying a yearly growth rate to the seasonally adjusted 2014 traffic counts to estimate the background traffic for the years 2025, 2035 and 2045 which are the project's anticipated phased build out years.

The growth rate utilized was 0.5 percent (%) to represent the expected traffic growth within the entire traffic impact area. This growth rate was then applied to the 2014 traffic counts to estimate the future background traffic volumes within the traffic impact area. **Table 6** provides a summary of the analysis. The following FDOT count stations were referenced for this analysis:

- Count Station no. 87-1114, located on SR 994/Quail Roost Dr., west of US-1 on SW 186th Street
- Count Station no. 87-2562, located on SR 5/US-1 S Dixie Hwy SB, south of SW 174th Street
- Count Station no. 87-2563, located on SR 5/US-1 S Dixie Hwy NB, south of SW 174th Street

Table 6 – 2014 Growth Analysis Summary

Station No	Growth Rate				
	5-year	10-year	SERPM	Average	Recommended(*)
87-1114	-3.59%	-2.29%	-0.20%	-1.13%	**0.50%**
87-2562	-1.02%	-0.75%			
87-2563	-2.44%	0.55%			
Average	**-2.35%**	**-0.83%**			

(*) All growth rates are negatives, we recommended 0.5% to create a conservative estimate

Traffic volumes for the area roadways obtained from the SERPM plots were used to calculate a linear growth rate. The SERPM growth rate analysis is presented in the **Table 7.**

Table 7 – SERPM Growth Rate Analysis

Location	Model Volumes (AADT)		Growth Rate (%)
	2005	2035	
SW 97th Avenue	12389	3610	-0.081
	12157	1590	-0.222
SW 184th Street	24620	4440	-0.152
	20936	4440	-0.124
US-1	50766	1590	-1.031
	25463	1590	-0.500
	25463	1800	-0.438
SW 98th Avenue	3726	3610	-0.001
SW 181st Terrace	2771	890	-0.07
	150	2260	0.03
Total	**178441**	**25820**	**-0.20**

The growth rate calculations were based on historical traffic counts obtained from FDOT Florida Traffic Online (2013) and from the SERPM model volumes. Growth rate data is included in **Appendix E**.

4.3. Future Background Analysis

As previously stated, the future background conditions peak hour capacity analysis were performed both with and without the proposed SW 95 Avenue corridor segment, for the following conditions.

- Peak Hour Transportation Corridor Segment Analysis
- Intersection level of service analysis

4.3.1. Future Background without SW 95th Avenue

Tables 8 through **10** present the results of the transportation corridor segment capacity analysis for the 2025, 2035 and 2045 during the A.M., midday and P.M. peak hour background traffic conditions, without the proposed SW 95th Avenue segment. As indicated in these tables, the corridors have sufficient capacity and are expected to operate above the adopted levels of service, with the exception of SW 97th Avenue corridor that fail for years 2025, 2035 and 2045 during the A.M. period and the US-1 corridor that fails in year 2045 for the A.M peak period.

Table 11 presents the results of the intersection capacity analysis. The intersection timings were optimized to reflect the change in traffic patterns in future years. Each of the study intersections operate above the adopted level of service during all analysis periods, with the exception to the intersections along US 1 at Evergreen Street, Wayne Avenue and Indigo Street.

As shown in **Table 11**, the intersection of SW 97th Avenue at US-1 and Evergreen Street operates below the adopted level of service during the A.M. peak period for the years of 2025, 2035 and 2045. The US-1 at Wayne Avenue intersection operates below the adopted level of service during both the A.M. and P.M. peak periods for the years of 2025, 2035 and 2045. The intersection of US-1 at E Indigo Street operates below the adopted level of service during the A.M., midday and P.M. peak periods for the years of 2025, 2035 and 2045

Figures 7 through **15** summarize the total background development traffic without the proposed SW 95th Avenue segment within the study area. Detailed information from the intersection capacity analysis is included in **Appendix F**.

Table 8 – 2025 Future Background Peak Hour Transportation Corridor Segment Conditions w/o SW 95th Ave. Link (A.M.-MID.-P.M.)

Principal Roadway		Peak Hour Roadway Volumes (V)			Peak Hour Vehicular Capacity* (C)	Peak Hour Excess Capacity			Peak Hour Level of Service					
		A.M.	MID.	P.M.		A.M.	MID.	P.M.	A.M.		MID.		P.M.	
									V/C	LOS	V/C	LOS	V/C	LOS
US-1	NEB	3289	2166	2276	3624	335	1458	1348	0.91	C	0.60	C	0.63	C
SW 97th Ave./Franjo Rd.	NB	586	333	368	576	-10	243	208	1.02	F	0.58	D	0.64	D
	SB	179	250	513	576	397	326	63	0.31	C	0.43	C	0.89	D
SW 184th St.	EB	607	621	958	1710	1103	1089	752	0.35	C	0.36	C	0.56	C
	WB	705	717	762	1710	1005	993	948	0.41	C	0.42	C	0.45	C

(*) Peak hour capacity derived from FDOT's 2013 Quality/Level of Service Handbook

Table 9 – 2035 Future Background Peak Hour Transportation Corridor Segment Conditions w/o SW 95th Ave. Link (A.M.-MID.-P.M.)

Principal Roadway		Peak Hour Roadway Volumes (V)			Peak Hour Vehicular Capacity* (C)	Peak Hour Excess Capacity			Peak Hour Level of Service					
		A.M.	MID.	P.M.		A.M.	MID.	P.M.	A.M.		MID.		P.M.	
									V/C	LOS	V/C	LOS	V/C	LOS
US-1	NEB	3444	2268	2383	3624	180	1356	1241	0.95	C	0.63	C	0.66	C
SW 97th Ave./Franjo Rd.	NB	612	349	385	576	-36	227	191	1.06	F	0.61	D	0.67	D
	SB	187	261	537	576	389	315	39	0.32	C	0.45	C	0.93	D
SW 184th St.	EB	636	649	1004	1710	1074	1061	706	0.37	C	0.38	C	0.59	C
	WB	738	751	798	1710	972	959	912	0.43	C	0.44	C	0.47	C

(*) Peak hour capacity derived from FDOT's 2013 Quality/Level of Service Handbook

Table 10 – 2045 Future Background Peak Hour Transportation Corridor Segment Conditions w/o SW 95th Ave. Link (A.M.-MID.-P.M.)

Principal Roadway		Peak Hour Roadway Volumes (V)			Peak Hour Vehicular Capacity* (C)	Peak Hour Excess Capacity			Peak Hour Level of Service					
		A.M.	MID.	P.M.		A.M.	MID.	P.M.	A.M.		MID.		P.M.	
									V/C	LOS	V/C	LOS	V/C	LOS
US-1	NEB	3630	2391	2513	3624	-6	1233	1111	1.00	F	0.66	C	0.69	C
SW 97th Ave. / Franjo Rd.	NB	646	367	406	576	-70	209	170	1.12	F	0.64	D	0.70	D
	SB	198	277	565	576	378	299	11	0.34	C	0.48	C	0.98	E
SW 184th St.	EB	671	684	1058	1710	1039	1026	652	0.39	C	0.40	C	0.62	C
	WB	777	793	841	1710	933	917	869	0.45	C	0.46	C	0.49	C

(*) Peak hour capacity derived from FDOT's 2013 Quality/Level of Service Handbook

Table 11 – A.M.-MID.-P.M. Future Background Intersection Conditions w/o SW 95th Ave. Link

Intersection	2025 Background						2035 Background						2045 Background					
	Peak Hour Overall Level of Service						Peak Hour Overall Level of Service						Peak Hour Overall Level of Service					
	LOS			Delay (secs.)			LOS			Delay (secs.)			LOS			Delay (secs.)		
	A.M.	MID.	P.M.	A.M	MID.	P.M.	A.M.	MID.	P.M.	A.M	MID.	P.M.	A.M.	MID.	P.M.	A.M	MID.	P.M.
SW 97th Avenue at SW 174th Street (Unsignalized)*	A	A	A	8.7	9.0	9.4	A	A	A	8.9	9.2	9.6	A	A	A	9.0	9.4	9.9
SW 97th Avenue at US-1 at Evergreen Street (Signalized)	F	C	D	138.7	28.4	38.9	F	C	D	166.8	29.3	41.8	F	C	D	196.7	31.3	44.7
SW 97th Avenue at Hibiscus Street (Unsignalized)*	B	A	B	10.2	9.8	10.3	B	A	B	10.3	9.9	10.5	B	B	B	10.5	10.1	10.7
SW 97th Avenue at SW 180th Street (Unsignalized)*	C	B	B	15.1	11.9	13.4	C	B	B	15.7	12.2	13.9	C	B	B	16.7	12.5	14.5
SW 97th Avenue at E Indigo Street (Unsignalized)*	B	B	B	10.2	10.3	11.1	B	B	B	10.4	10.4	11.3	B	B	B	10.6	10.5	11.5
SW 97th Avenue at SW 181st Terrace (Unsignalized)*	C	B	B	15.5	12.6	14.4	C	B	B	16.4	12.9	15.1	C	B	C	17.5	13.3	16.0
SW 97th Avenue at SW 182nd Street (Unsignalized)*	B	B	B	14.7	11.6	13.5	C	B	B	15.3	11.9	14.0	C	B	B	16.2	12.2	14.6
SW 97th Avenue at SW 183rd Street (Unsignalized)*	B	B	C	12.6	12.3	16.7	B	B	C	13.0	12.6	17.6	B	B	C	13.5	13.0	18.8
SW 97th Avenue at SW 184th Street (Signalized)	C	C	D	34.4	29.2	43.4	C	C	D	35.0	29.9	45.3	C	C	D	37.1	30.1	47.7
SW 184th Street and SW 95th Court (Unsignalized)*	D	C	E	25.2	18.5	35.5	D	C	E	27.8	19.7	40.7	D	C	E	31.8	21.3	48.6
US-1 at SW 184th Street (Signalized)	E	D	E	57.1	45.3	51.5	E	D	D	56.9	45.0	50.9	E	D	D	56.8	45.2	51.0
US-1 at Wayne Avenue (Unsignalized)*	F	E	F	91.1	41.5	79.7	F	E	F	115.6	49.5	105.3	F	E	F	158.3	63.1	153.0
US-1 at E Indigo Street (Unsignalized)*	F	F	F	262.9	140.5	143.4	F	F	F	358.0	172.0	188.6	F	F	F	531.5	222.1	265.6

*Overall Intersection LOS not provided for two-way stop-controlled Intersections. The worst minor street movement is Indicated.

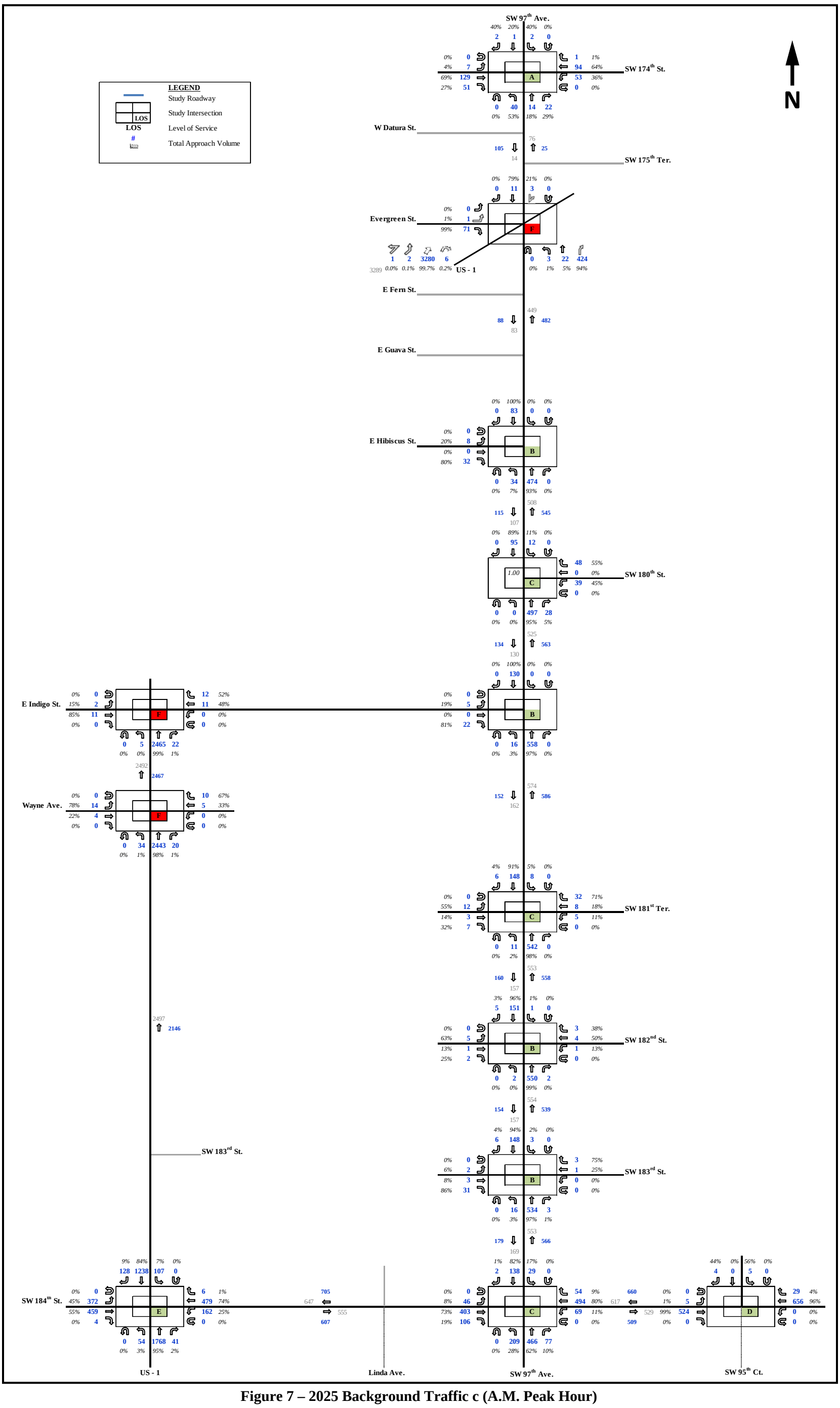

Figure 7 – 2025 Background Traffic c (A.M. Peak Hour)

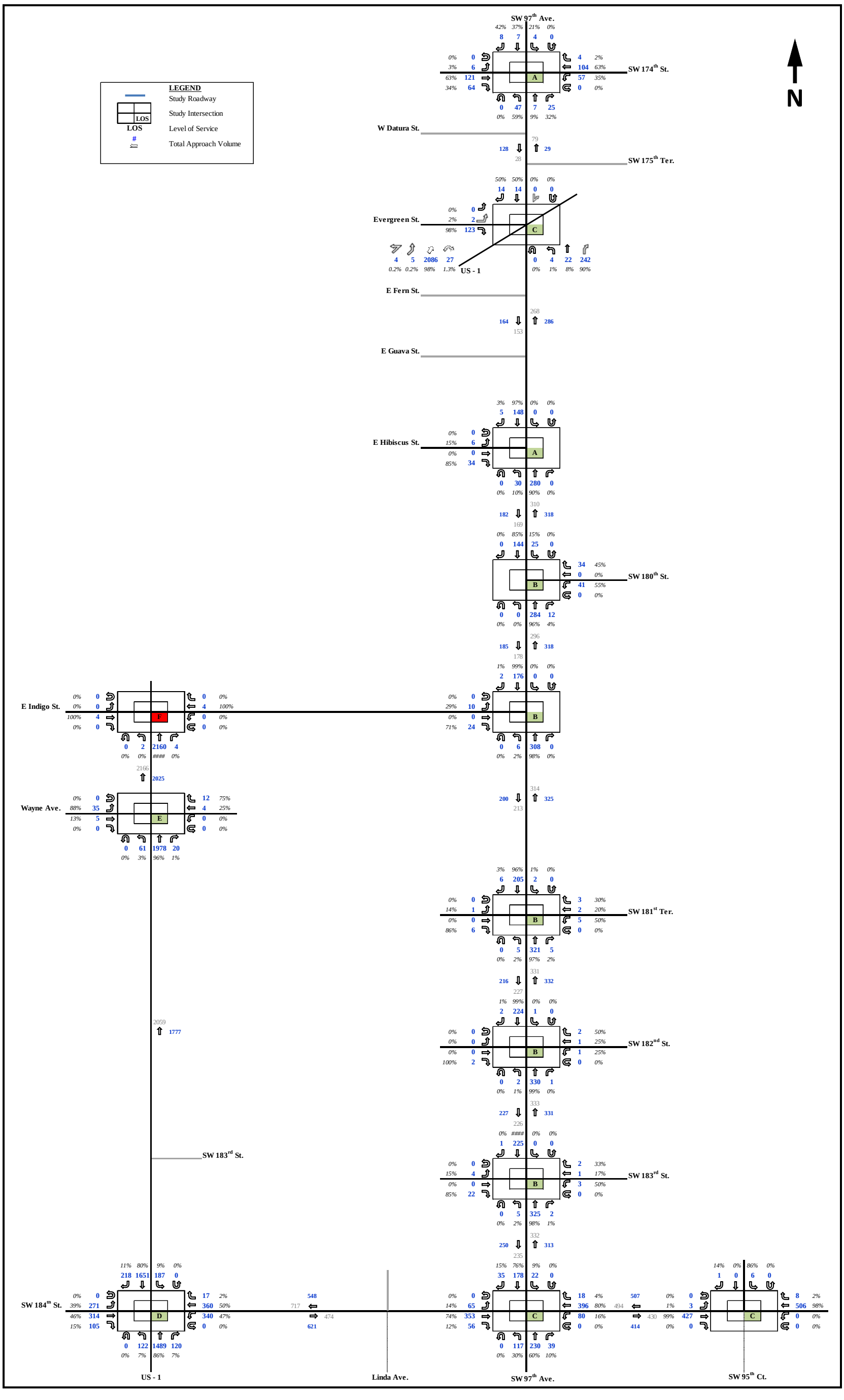

Figure 8 – 2025 Background Traffic w/o SW 95th Ave. Link (MID. Peak Hour)

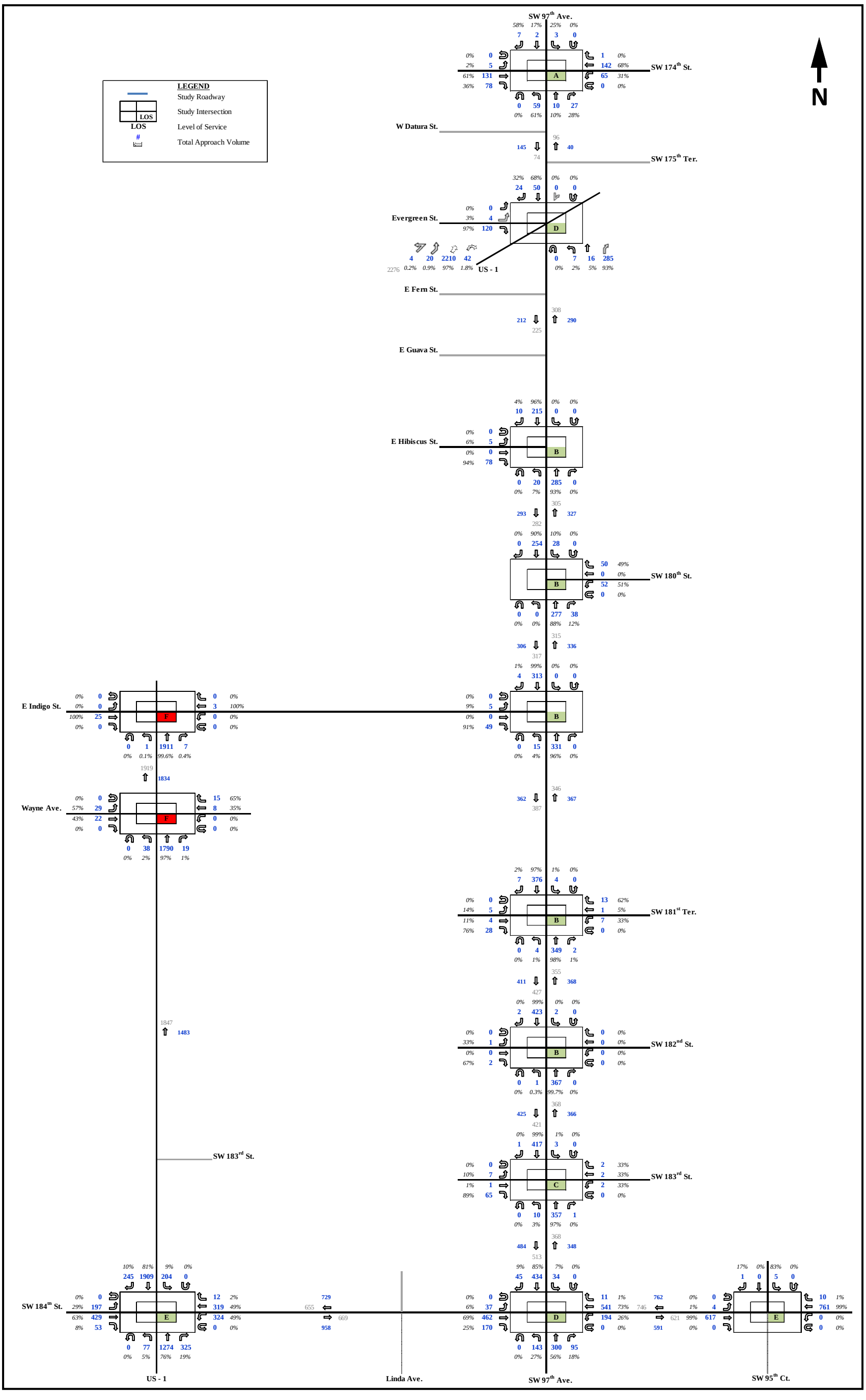

Figure 9 – 2025 Background Traffic w/o SW 95th Ave. Link (P.M. Peak Hour)

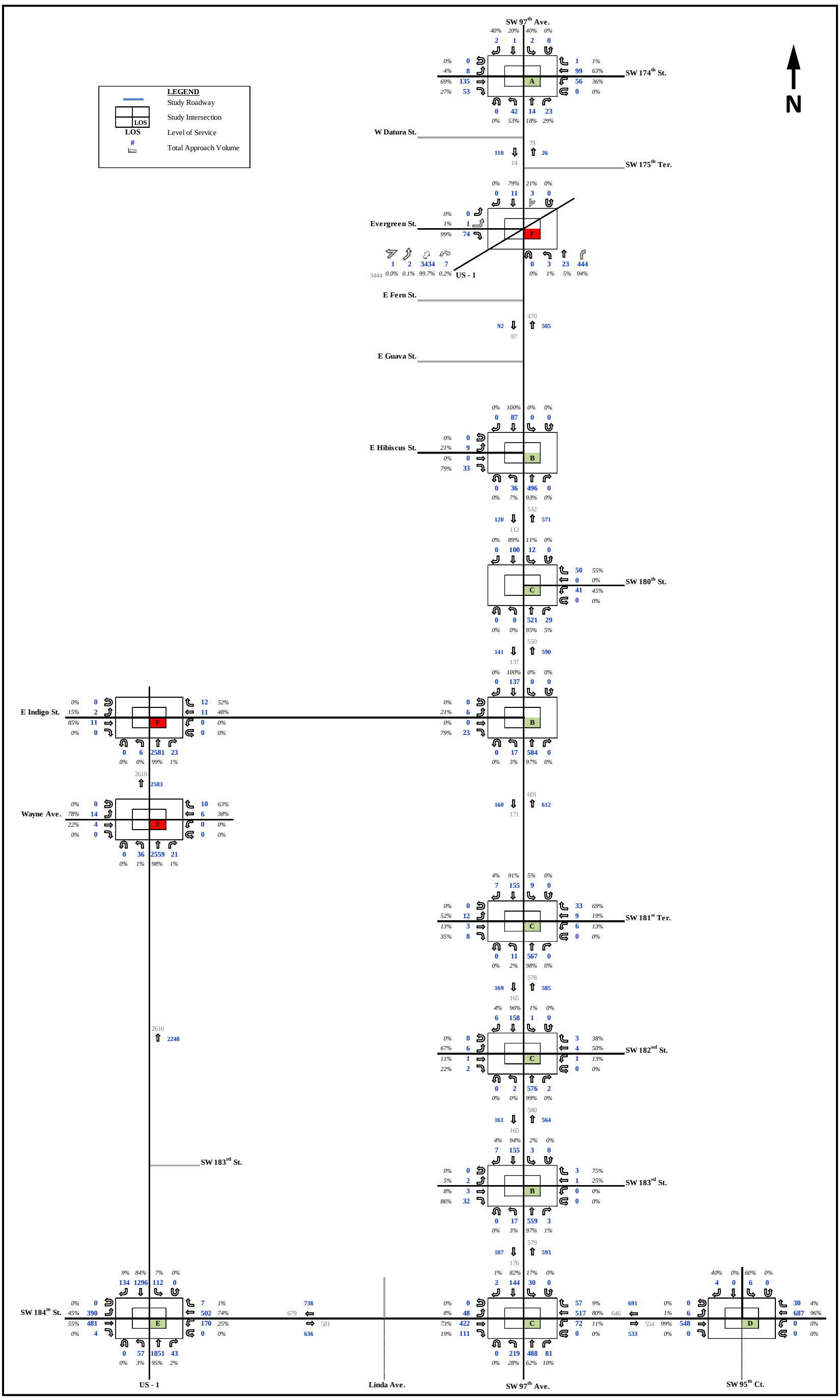

Figure 10 – 2035 Background Traffic w/o SW 95th Ave. Link (A.M. Peak Hour)

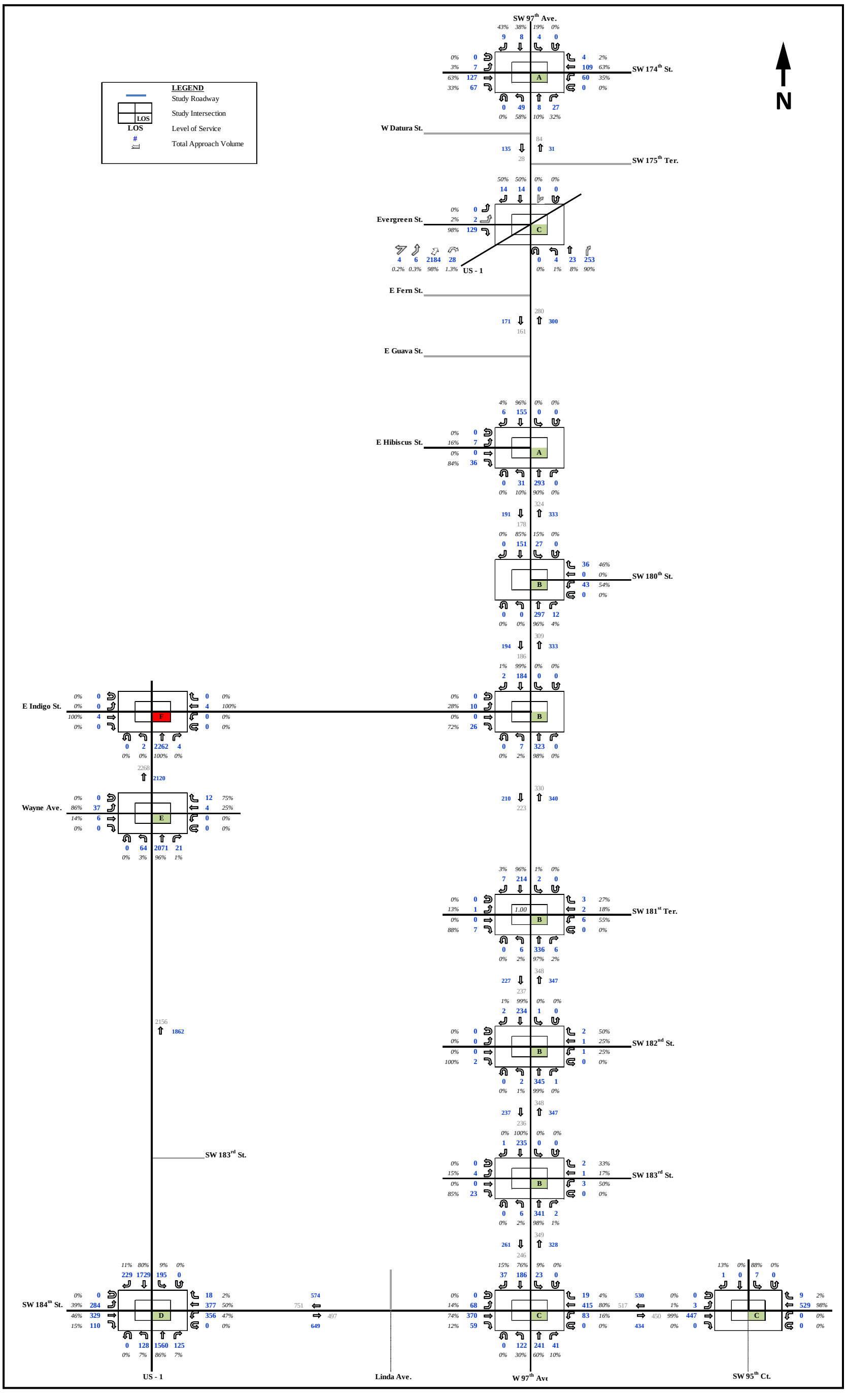

Figure 11 – 2035 Background Traffic w/o SW 95th Ave. Link (MID. Peak Hour)

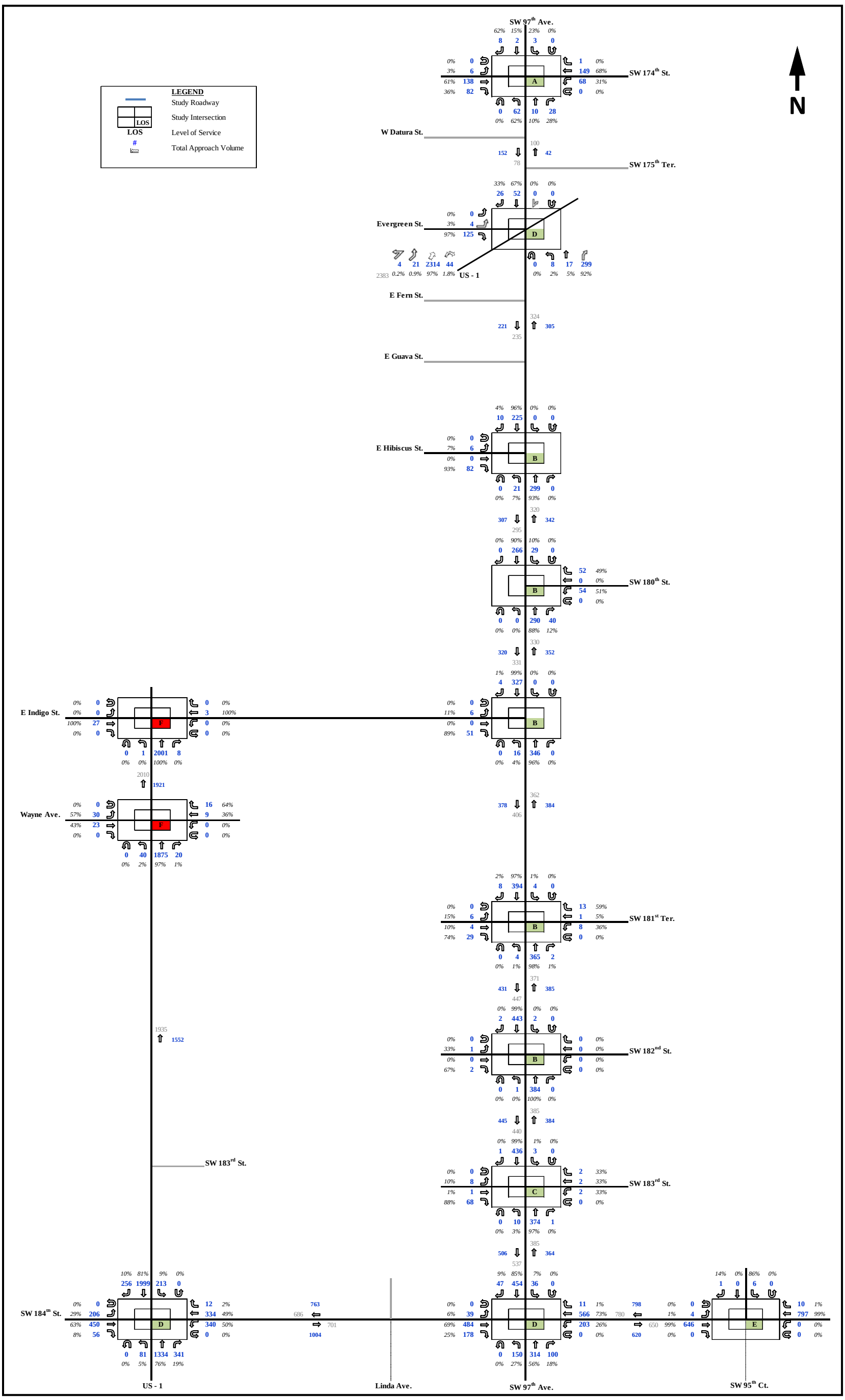

Figure 12 – 2035 Background Traffic w/o SW 95th Ave. Link (P.M. Peak Hour)

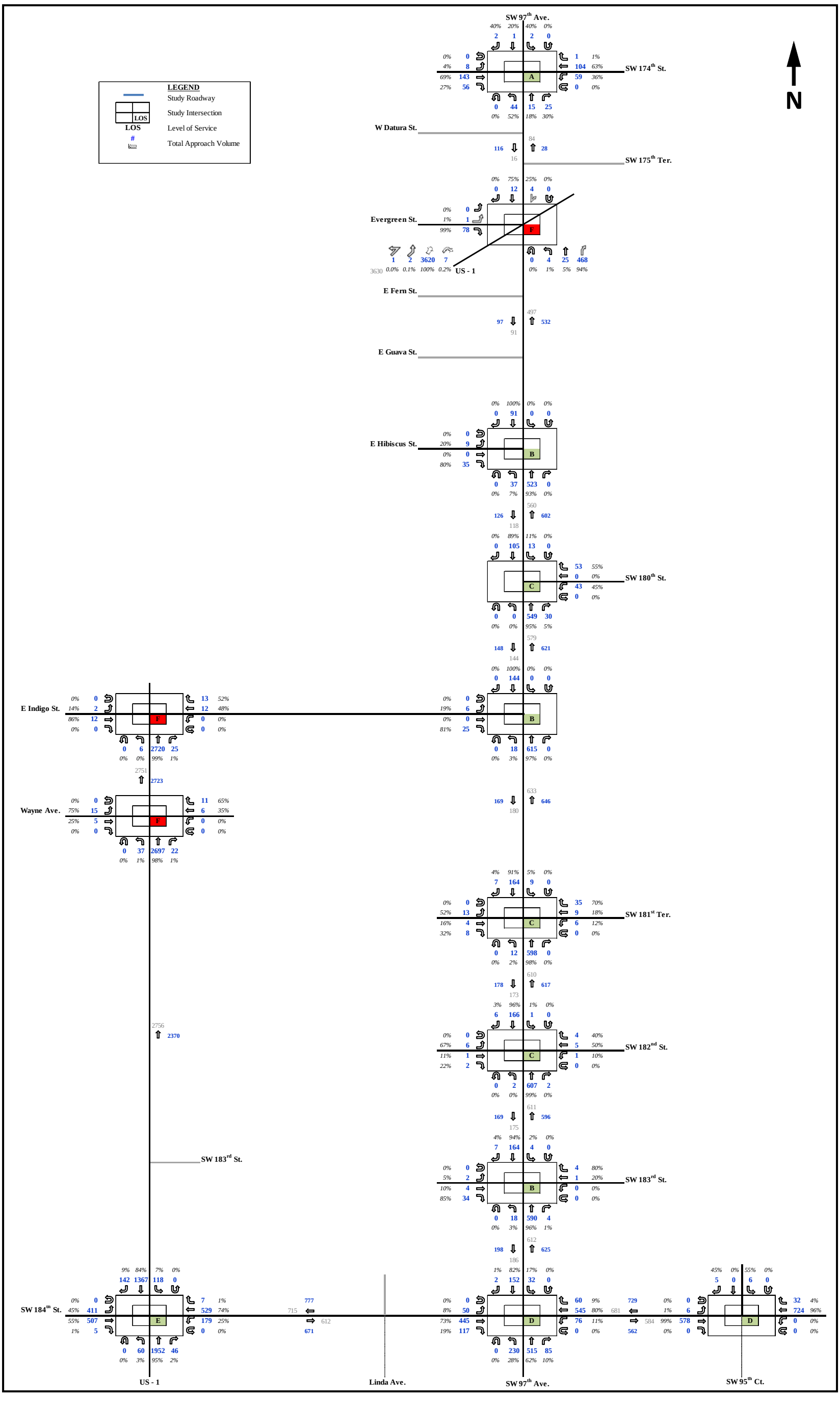

Figure 13 – 2045 Background Traffic w/o SW 95th Ave. Link (A.M. Peak Hour)

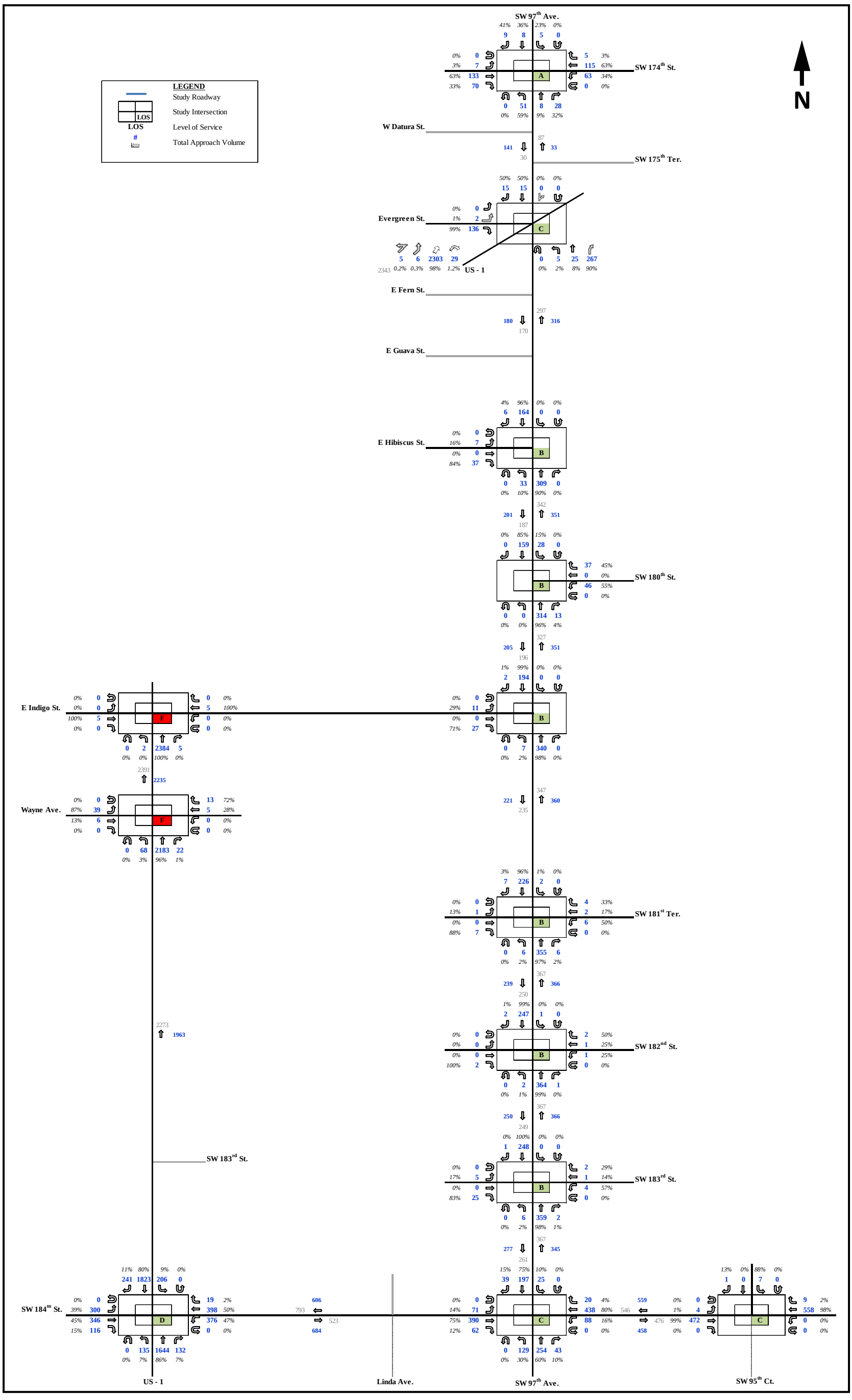

Figure 14 – 2045 Background Traffic w/o SW 95th Ave. Link (MID. Peak Hour)

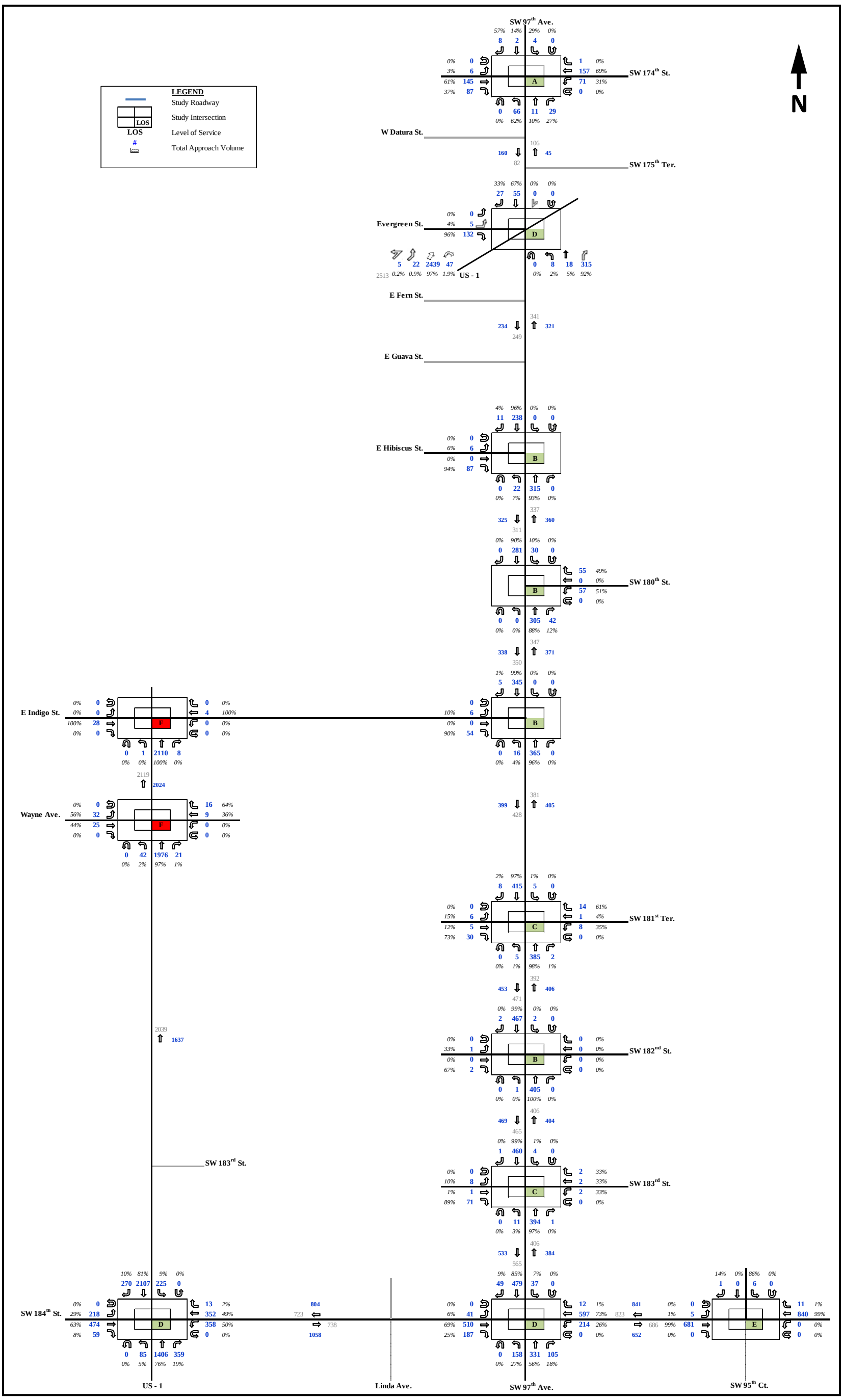

Figure 15 – 2045 Background Traffic w/o SW 95th Ave. Link (P.M. Peak Hour)

4.3.2. Future Background with SW 95th Avenue

Understanding the basic concept that traffic is "fluid", for analysis purposes traffic volumes for the parallel segments of SW 97th Avenue and the proposed SW 95th Avenue segment were balanced and evenly distributed along each segment.

Table 12 through **14** present the results of the transportation corridor segment capacity analysis for the 2025, 2035 and 2045 during the A.M., midday and P.M. peak hour background traffic conditions, with the proposed SW 95th Avenue segment. As indicated in these tables, the corridors have sufficient capacity and are expected to operate above the adopted levels of service, with exception of the US-1 corridor that fails for years 2025, 2035 and 2045 during the A.M. period.

Table 15 presents the results of the intersection capacity analysis. The intersection timings were optimized to reflect the change in traffic patterns in future years. Each of the study intersections operate above the adopted level of service during all analysis periods, with the exception of SW 184th Street at SW 95th Avenue and the intersections along US 1 at Evergreen Street, Wayne Avenue and Indigo Street.

As shown in **Table 15**, the intersection of SW 97th Avenue at US-1 and Evergreen Street operates below the adopted level of service during the A.M. peak period for the year 2045. The US-1 at Wayne Avenue intersection operates below the adopted level of service during both the A.M. and P.M. peak periods for the year of 2025 and the A.M., midday and P.M. peak periods for the years 2035 and 2045. The intersection of US-1 at E Indigo Street operates below the adopted level of service during the A.M., midday and P.M. peak periods for the years of 2025, 2035 and 2045. The SW 184th Street at SW 95th Avenue intersection operates below the adopted level of service during both the A.M. and P.M. peak periods for the years of 2025, 2035 and 2045.

As expected, in general overall delay times are reduced and level of service is improved at each of the study intersections with the proposed SW 95th Avenue segment in the network.

Figure 16 to Figure 24 summarizes the total background development traffic with the proposed SW 95th Avenue segment within the study area. Detailed information from the intersection capacity analysis is included in **Appendix G**.

Table 12 – 2025 Future Background Peak Hour Transportation Corridor Segment Conditions w/ SW 95th Ave. Link (A.M.-MID.-P.M.)

Principal Roadway		Peak Hour Roadway Volumes (V)			Peak Hour Vehicular Capacity* (C)	Peak Hour Excess Capacity			Peak Hour Level of Service					
		A.M.	MID.	P.M.		A.M.	MID.	P.M.	A.M.		MID.		P.M.	
									V/C	LOS	V/C	LOS	V/C	LOS
US-1	NEB	3289	2166	2276	3624	335	1458	1348	0.91	C	0.60	C	0.63	C
SW 97th Ave./Franjo Rd.	NB	380	221	228	576	196	355	348	066	D	0.38	C	0.64	C
	SB	105	157	279	576	471	419	297	0.18	C	0.27	C	0.89	D
SW 95th Ave.	NB	297	166	229	576	279	410	347	0.52	D	0.29	C	0.64	C
	SB	93	115	240	576	483	461	336	0.16	C	0.20	C	0.89	C
SW 184th St.	EB	792	621	958	1710	918	1089	752	0.46	C	0.36	C	0.56	C
	WB	729	717	979	1710	981	993	731	0.43	C	0.42	C	0.45	C

(*) Peak hour capacity derived from FDOT's 2013 Quality/Level of Service Handbook

Table 13 – 2035 Future Background Peak Hour Transportation Corridor Segment Conditions w/ SW 95th Ave. Link (A.M.-MID.-P.M.)

Principal Roadway		Peak Hour Roadway Volumes (V)			Peak Hour Vehicular Capacity* (C)	Peak Hour Excess Capacity			Peak Hour Level of Service					
		A.M.	MID.	P.M.		A.M.	MID.	P.M.	A.M.		MID.		P.M.	
									V/C	LOS	V/C	LOS	V/C	LOS
US-1	NEB	3444	2268	2383	3624	180	1356	1241	0.95	C	0.63	C	0.66	C
SW 97th Ave./Franjo Rd.	NB	398	232	238	576	178	344	338	0.69	D	0.40	C	0.41	C
	SB	109	164	292	576	467	412	284	0.19	C	0.28	C	0.51	D
SW 95th Ave.	NB	312	174	240	576	264	402	336	0.54	D	0.30	C	0.42	C
	SB	97	120	252	576	479	456	324	0.17	C	0.21	C	0.44	C
SW 184th St.	EB	830	649	1004	1710	880	1061	706	0.49	C	0.38	C	0.59	C
	WB	763	751	1025	1710	947	959	685	0.45	C	0.44	C	0.60	C

(*) Peak hour capacity derived from FDOT's 2013 Quality/Level of Service Handbook

Table 14 – 2045 Future Background Peak Hour Transportation Corridor Segment Conditions w/ SW 95th Ave. Link (A.M.-MID.-P.M.)

Principal Roadway		Peak Hour Roadway Volumes (V)			Peak Hour Vehicular Capacity* (C)	Peak Hour Excess Capacity			Peak Hour Level of Service					
		A.M.	MID.	P.M.		A.M.	MID.	P.M.	A.M.		MID.		P.M.	
									V/C	LOS	V/C	LOS	V/C	LOS
US-1	NEB	3630	2391	2513	3624	-6	1233	1111	1.00	F	0.66	C	0.69	C
SW 97th Ave. / Franjo Rd.	NB	419	243	252	576	157	333	324	0.73	D	0.42	C	0.44	C
	SB	116	172	306	576	460	404	270	0.20	C	0.30	C	0.53	D
SW 95th Ave.	NB	329	183	253	576	247	393	323	0.57	D	0.32	C	0.44	C
	SB	103	126	266	576	473	450	310	0.18	C	0.22	C	0.46	C
SW 184th St.	EB	875	684	1058	1710	835	1026	652	0.51	C	0.40	C	0.62	C
	WB	805	793	1081	1710	905	917	629	0.47	C	0.46	C	0.63	C

(*) Peak hour capacity derived from FDOT's 2013 Quality/Level of Service Handbook

Table 15 – A.M.-MID.-P.M. Future Background Intersection Conditions w/ SW 95th Ave. Link

Intersection	2025 Background						2035 Background						2045 Background					
	Peak Hour Overall Level of Service						Peak Hour Overall Level of Service						Peak Hour Overall Level of Service					
	LOS			Delay (secs.)			LOS			Delay (secs.)			LOS			Delay (secs.)		
	A.M.	MID.	P.M.	A.M	MID.	P.M.	A.M.	MID.	P.M.	A.M	MID.	P.M.	A.M.	MID.	P.M.	A.M	MID.	P.M.
SW 97th Avenue at SW 174th Street (Unsignalized)*	A	A	A	8.3	8.3	8.6	A	A	A	8.3	8.4	8.8	A	A	A	8.5	8.5	8.9
SW 97th Avenue at US-1 at Evergreen Street (Signalized)	E	C	C	56.4	22.0	27.7	E	C	C	74.4	23.2	27.9	F	C	C	97.5	23.3	29.8
SW 97th Avenue at Hibiscus Street (Unsignalized)*	A	A	A	9.2	9.1	9.4	A	A	A	9.3	9.2	9.6	A	A	A	9.3	9.2	9.6
SW 97th Avenue at SW 180th Street (Unsignalized)*	B	A	B	10.5	9.7	10.1	B	A	B	10.7	9.8	10.2	B	A	B	10.8	9.9	10.3
SW 97th Avenue at E Indigo Street (Unsignalized)*	A	A	A	9.2	9.3	9.6	A	A	A	9.3	9.3	9.7	A	A	A	9.3	9.4	9.8
SW 97th Avenue at SW 181st Terrace (Unsignalized)*	B	B	B	11.1	10.5	10.6	B	B	B	11.1	10.7	10.9	B	B	B	11.3	10.6	10.9
SW 97th Avenue at SW 182nd Street (Unsignalized)*	B	B	B	11.1	10.0	10.2	B	B	B	11.2	10.1	10.3	B	B	B	11.2	10.2	10.4
SW 97th Avenue at SW 183rd Street (Unsignalized)*	B	B	B	10.3	10.2	11.4	B	B	B	10.5	10.3	11.6	B	B	B	10.2	10.5	11.8
SW 97th Avenue at SW 184th Street (Signalized)	C	C	D	33.9	28.9	45.4	D	C	D	35.5	28.8	49.1	D	C	E	37.9	29.5	57.1
SW 184th Street and SW 95th Avenue (Unsignalized)*	F	C	F	115.5	18.8	179.7	F	C	F	201.6	21.1	308.1	F	C	F	371.8	24.3	511.4
US-1 at SW 184th Street (Signalized)	E	D	E	64.8	51.9	59.1	E	E	E	76.0	57.5	65.4	F	E	E	84.5	66.2	75.4
US-1 at Wayne Avenue (Unsignalized)*	F	E	F	85.3	40.3	78.3	F	F	F	123.9	51.0	104.0	F	F	F	158.8	64.6	155.5
US-1 at E Indigo Street (Unsignalized)*	F	F	F	271.0	139.0	141.3	F	F	F	357.3	168.4	190.5	F	F	F	549.8	225.5	264.8
SW 95th Avenue at SW 183rd Street (Unsignalized)*	B	A	B	10.8	9.3	10.3	B	A	B	10.9	9.4	10.4	B	A	B	11.1	9.5	10.6
SW 95th Avenue at SW 182nd Street (Unsignalized)*	B	A	A	10.1	9.6	0.0	B	A	A	10.2	9.6	0.0	B	A	A	10.4	9.7	0.0
SW 95th Avenue at SW 181st Terrace (Unsignalized)*	B	A	B	10.6	9.4	10.4	B	A	B	10.8	9.4	10.6	B	A	B	11.0	9.5	10.7
SW 95th Avenue at SW 180th Street (Unsignalized)*	B	A	B	10.0	9.5	10.1	B	A	B	10.1	9.5	10.2	B	A	B	10.3	9.6	10.4
SW 95th Avenue at SW 174th Street (Unsignalized)*	A	A	A	10.0	8.9	9.5	B	A	A	10.3	9.1	9.7	B	A	A	10.6	9.2	10.0

*Overall Intersection LOS not provided for two-way stop-controlled Intersections. The worst minor street movement is indicated.
Note: Due to proximity, existing volumes at the intersection of SW 184th St. at SW 95th Ct. were used at the new intersection 184th St. at SW 95th Ave. for balancing and future projections

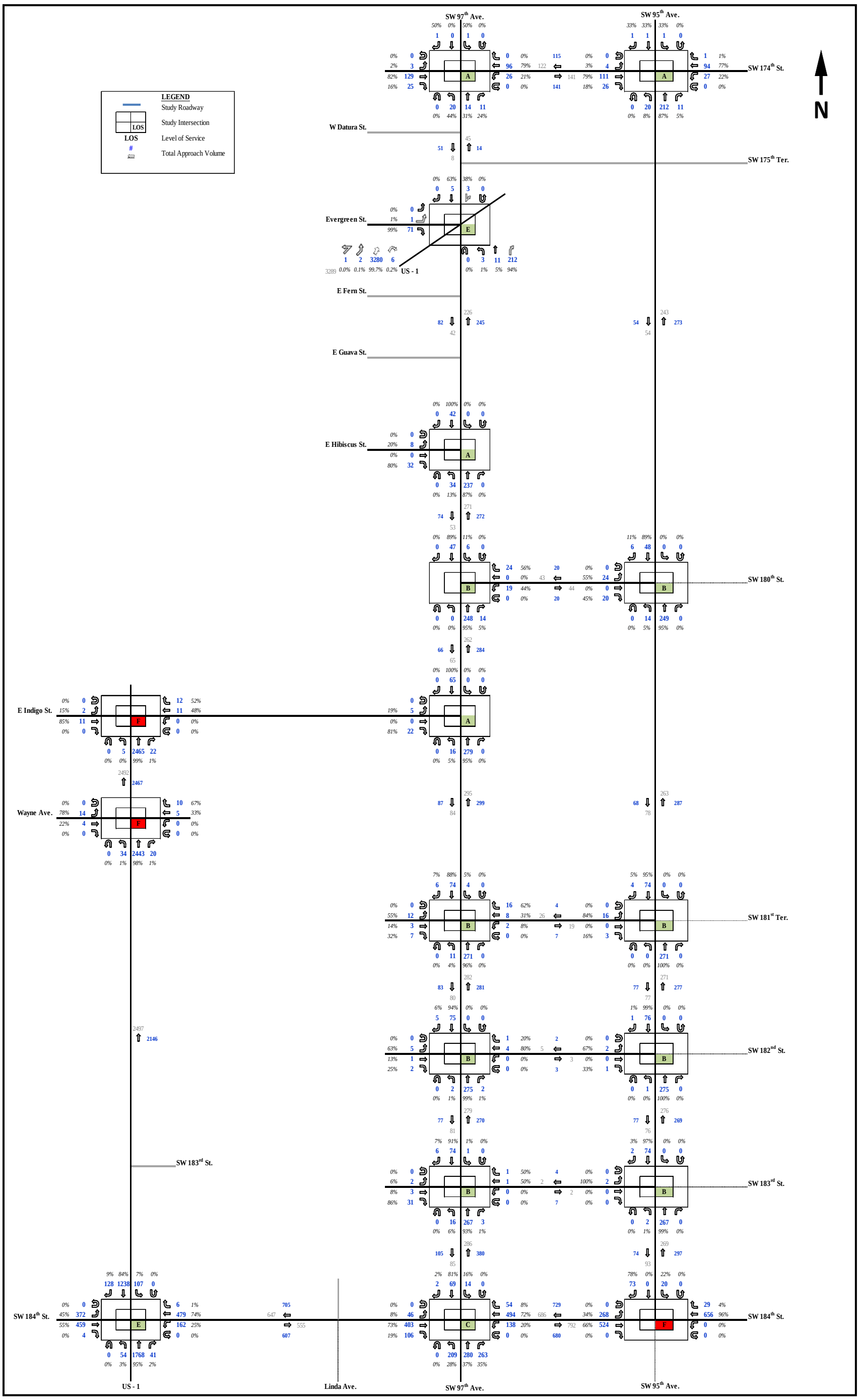

Figure 16 – 2025 Background Traffic w/ SW 95th Ave. Link (A.M. Peak Hour)

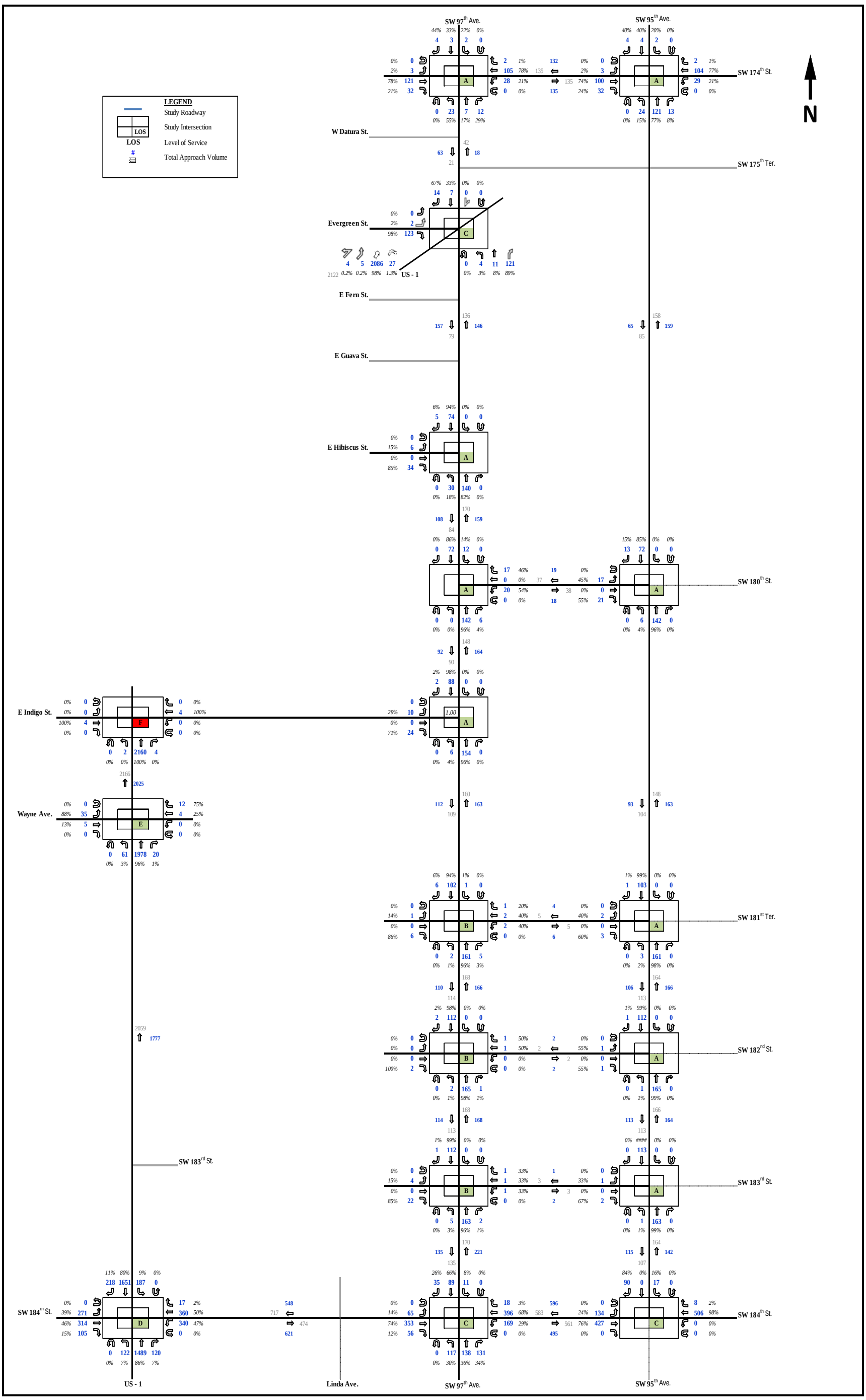

Figure 17 – 2025 Background Traffic w/ SW 95th Ave. Link (MID. Peak Hour)

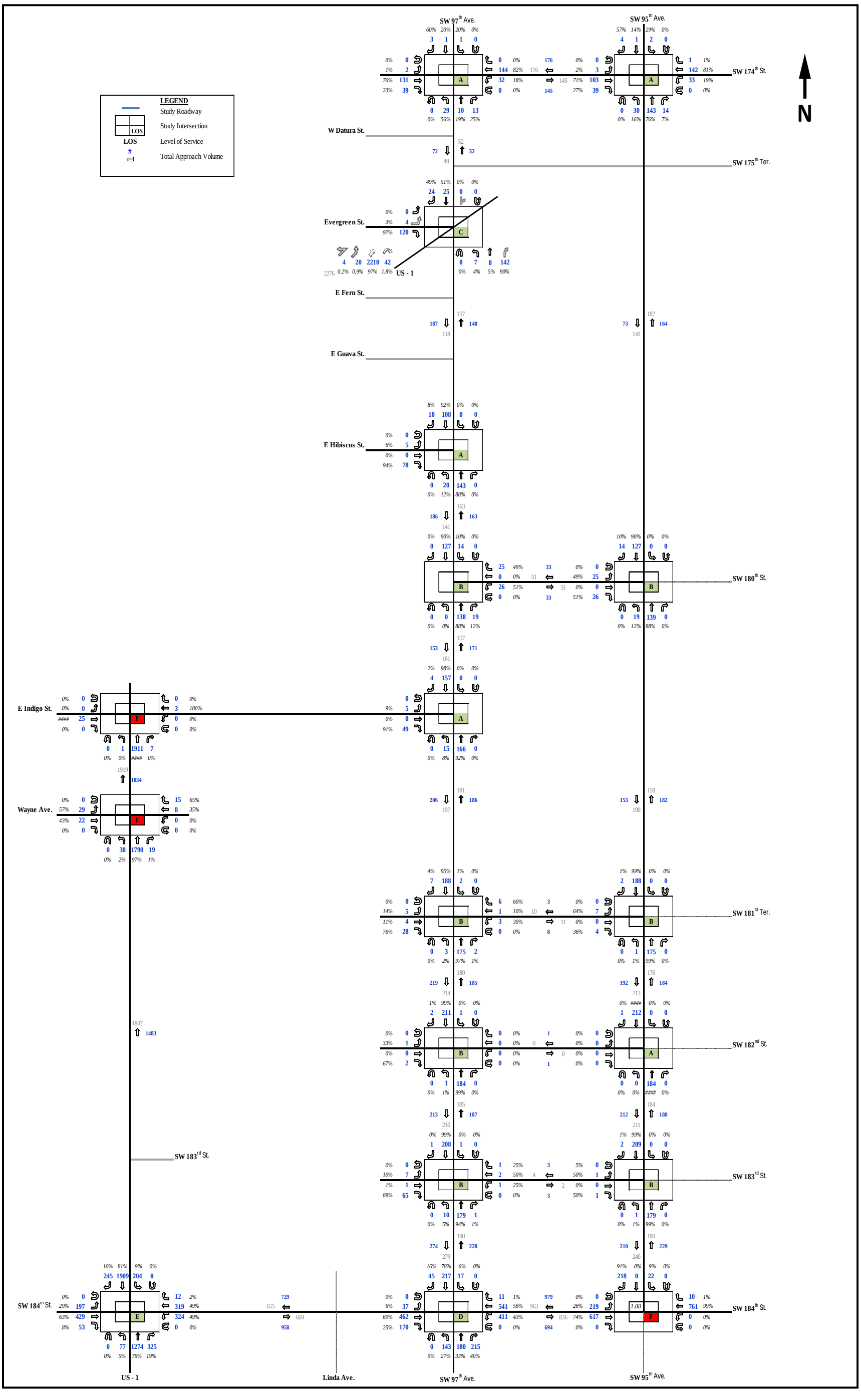

Figure 18 – 2025 Background Traffic w/ SW 95th Ave. Link (P.M. Peak Hour)

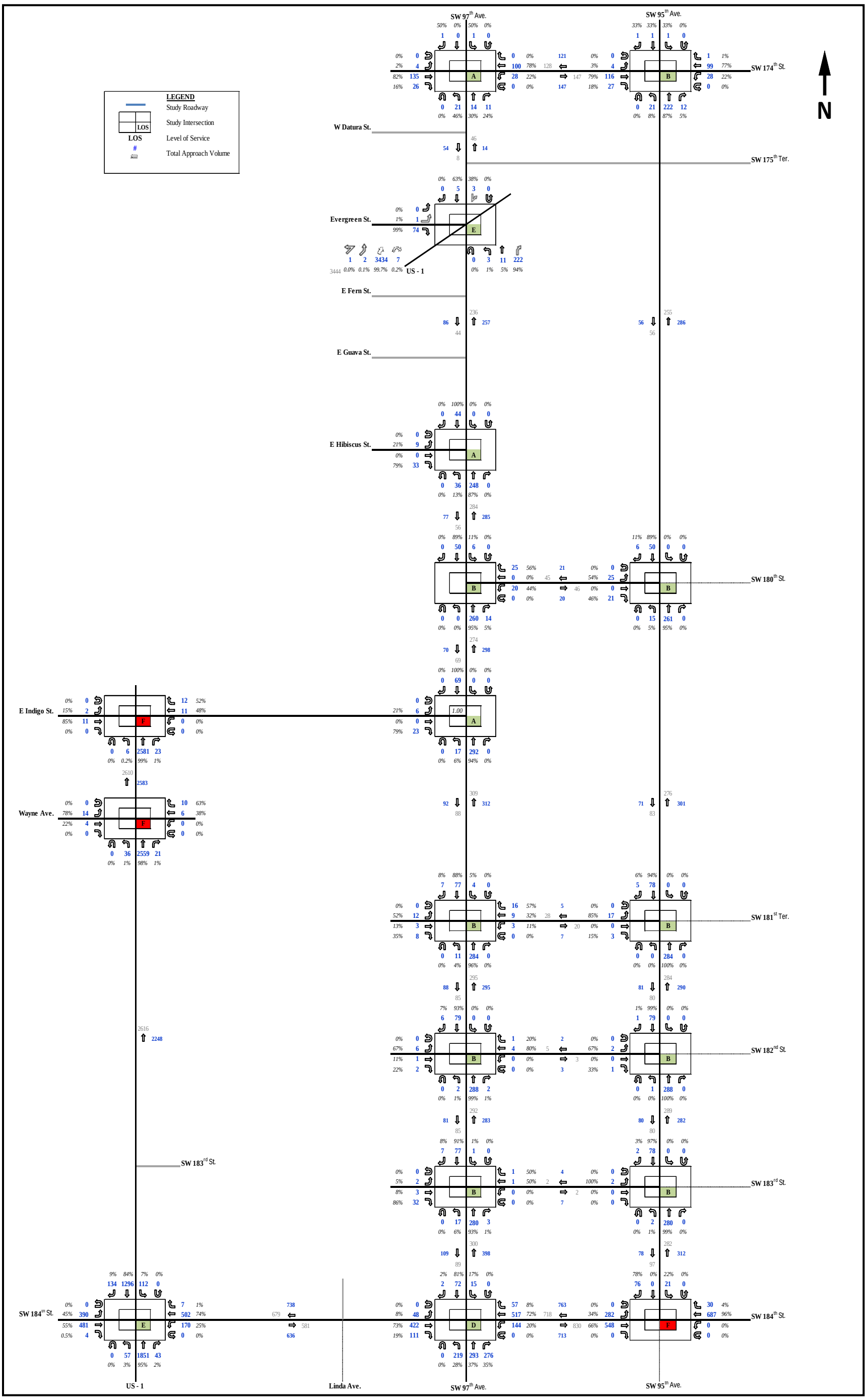

Figure 19 – 2035 Background Traffic w/ SW 95th Ave. Link (A.M. Peak Hour)

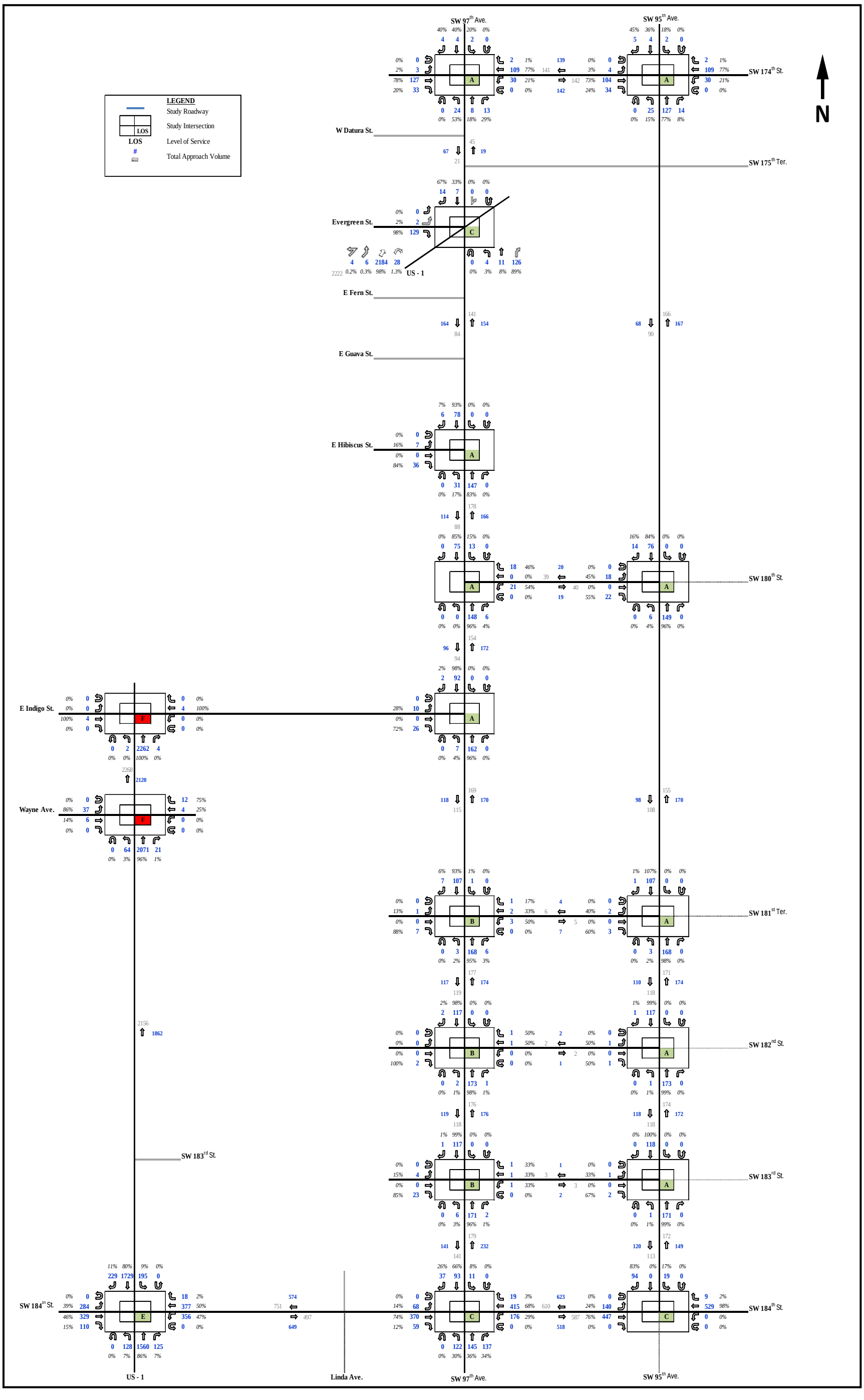

Figure 20 – 2035 Background Traffic w/ SW 95th Ave. Link (MID. Peak Hour)

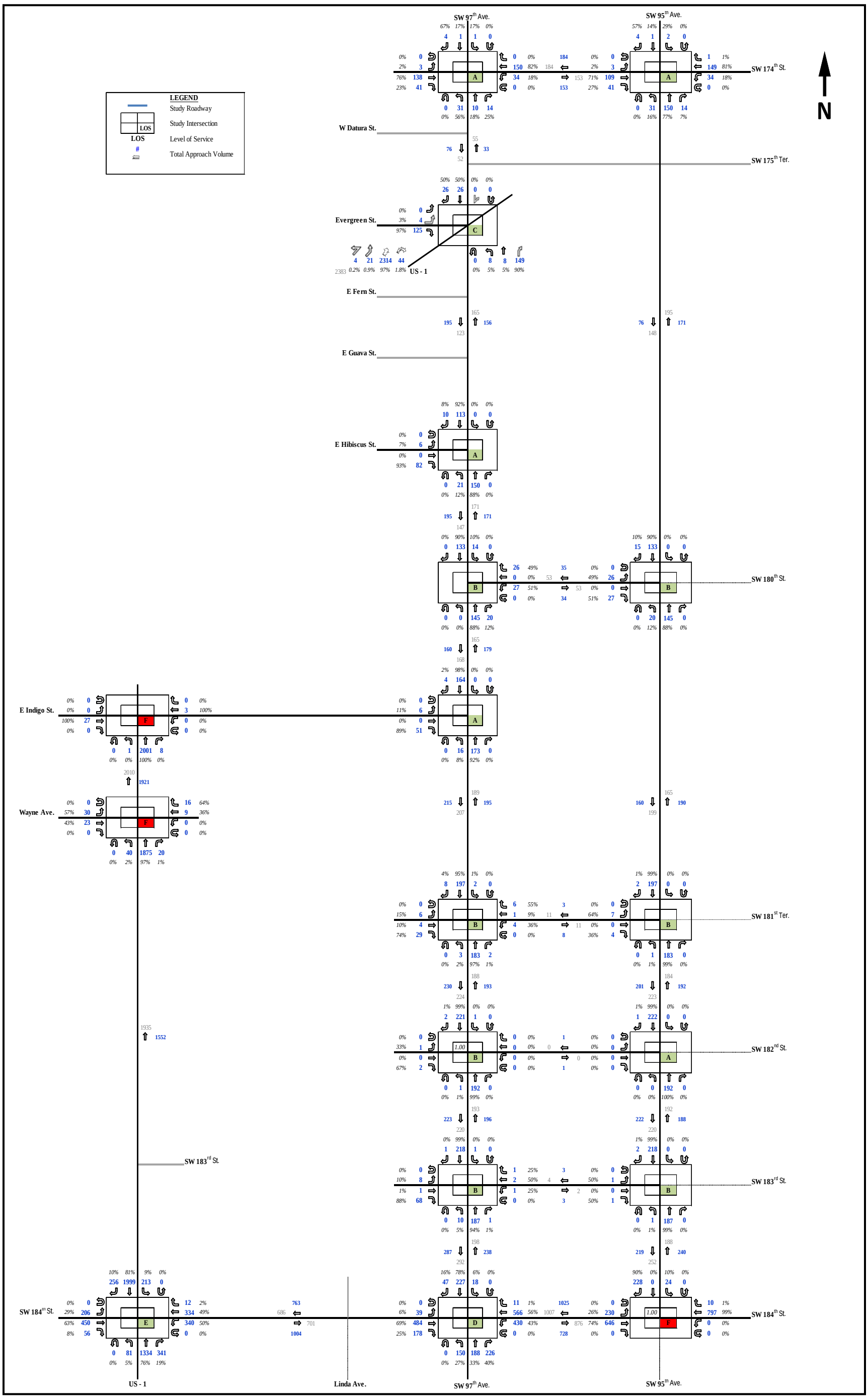

Figure 21 – 2035 Background Traffic w/ SW 95th Ave. Link (P.M. Peak Hour)

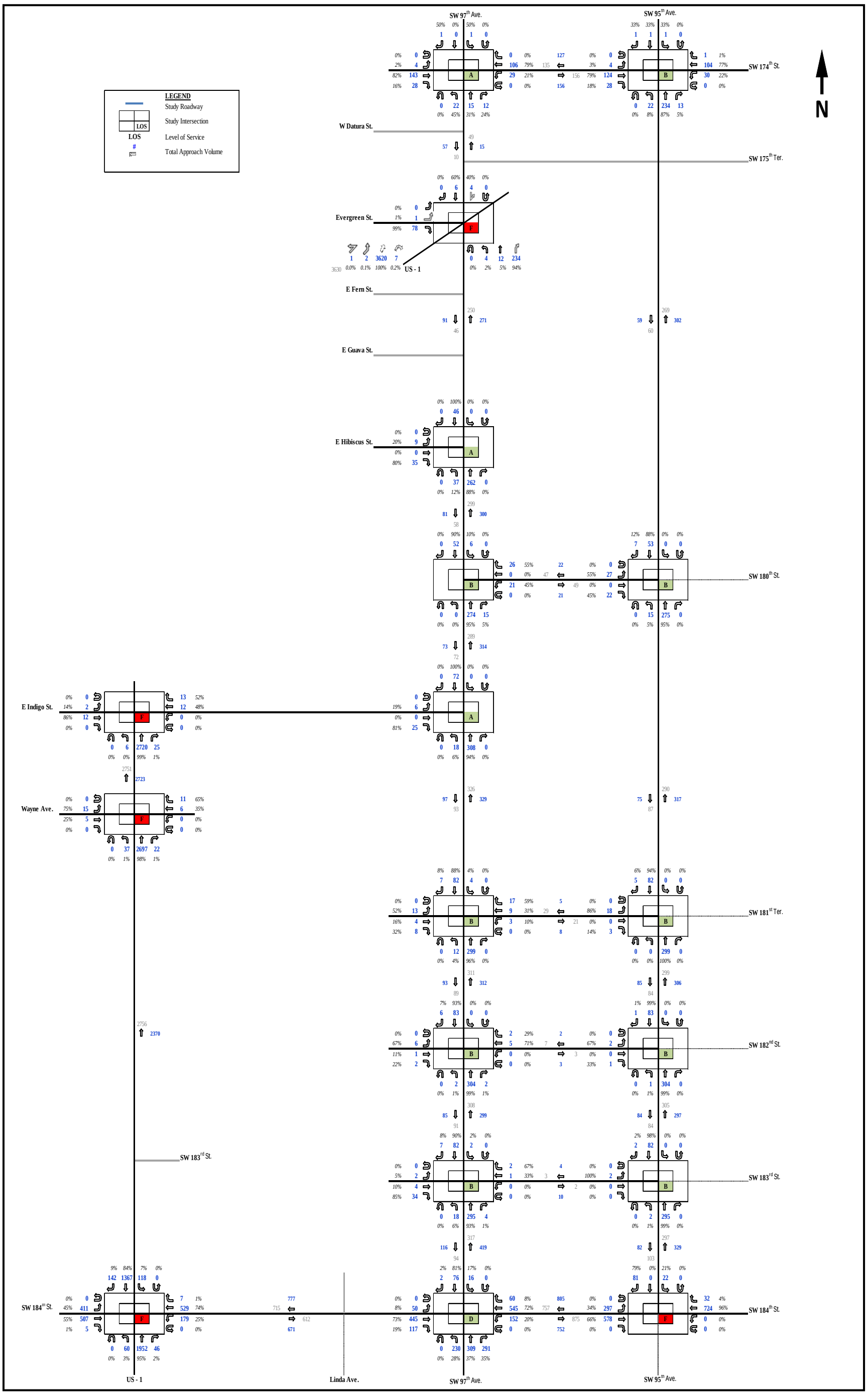

Figure 22 – 2045 Background Traffic w/ SW 95th Ave. Link (A.M. Peak Hour)

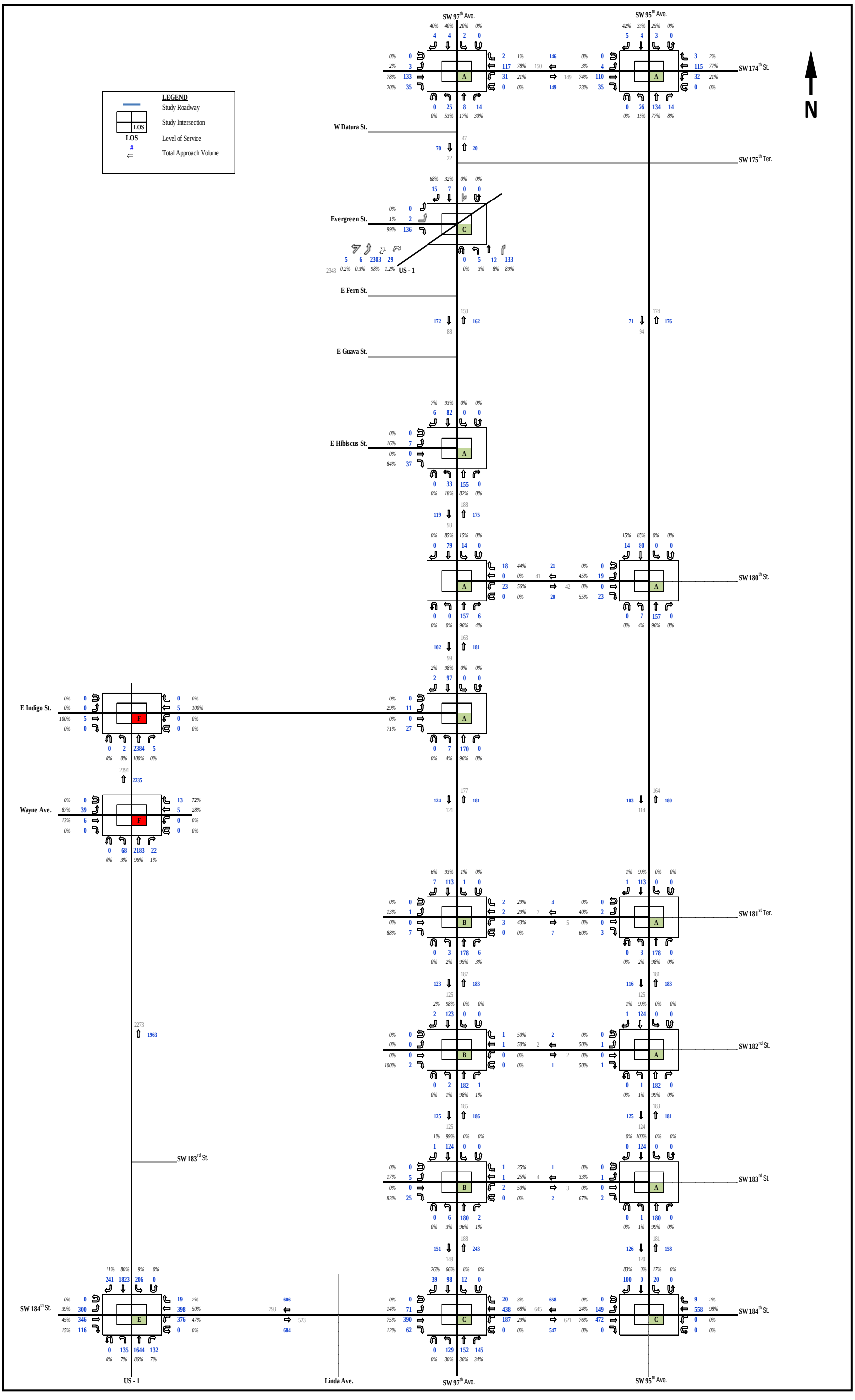

Figure 23 – 2045 Background Traffic w/ SW 95th Ave. Link (MID. Peak Hour)

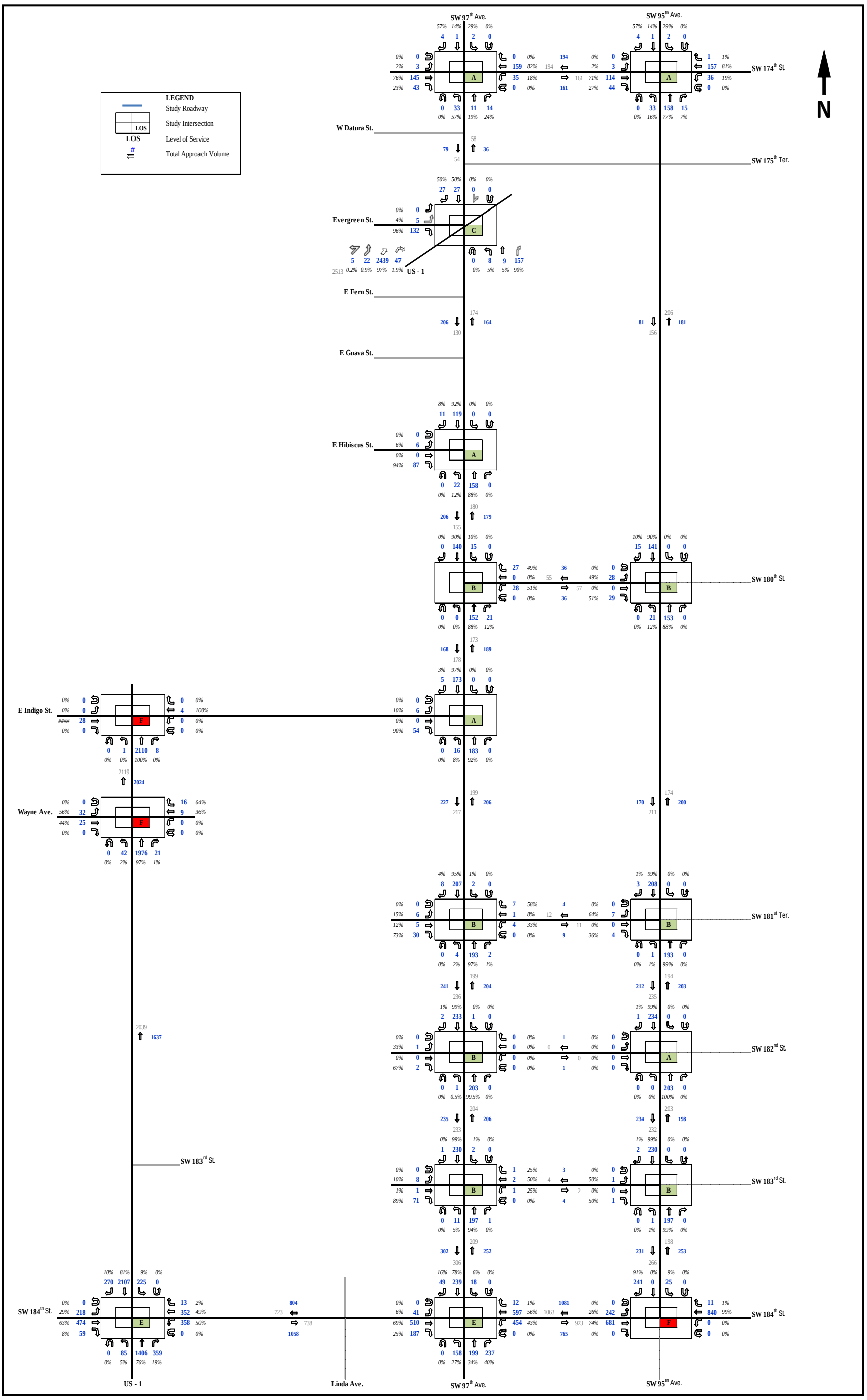

Figure 24 – 2045 Background Traffic w/ SW 95th Ave. Link (P.M. Peak Hour)

4.4. Project Traffic

Project traffic was developed using trip generation rates from The Trip Generation Manual, 9th Edition, by the Institute of Transportation Engineers (ITE) for each land use and analysis phase year, as previously described:

Phase 1 (Year 2025)

- CBD Core District:
  - 1320 Multi-family Residential Units
  - 132 ksf Retail/Office

Phase 2 (Year 2035)

- Central Mixed Use District:
  - 745 Multi-family Residential Units
  - 53.426 ksf Retail/Office

Phase 3 (Year 2045)

- Perimeter District:
  - 450 Multi-family Residential Units
  - 268.86 ksf Retail/Office
- North Mixed Use District:
  - 550 Multi-family Residential Units
  - 286.015 ksf Retail/Office
- US 1 Island District:
  - 2324 Multi-family Residential Units
  - 826.246 ksf Retail/Office

4.4.1. Trip Generation

Trip generation is the method by which the amount of traffic, or the number of trips to and from a site, is estimated. The Trip Generation Manual, 9th Edition, by the Institute of Transportation Engineers (ITE), is a common source of trip generation characteristics, providing data on a variety of development types on daily and peak-hour basis.

Based upon the ITE land use codes, the proposed project's trip generation was determined, as follows:

- ITE Land Use Code 223 (Mid-Rise Apartment)
- ITE Land Use Code 710 (General Office Building)

Internal Capture Volumes

Internal capture trips are trips that occur between various land uses within the development without needing to access the external roadway network. As a conservative approach, since the actual land uses are still yet to be determined, an internal capture of 20% was calculated for the project.

Pass-By Capture Volumes

A portion of the trips at the project driveways will be the result of the project's new trips. Pass-by trips are stops on the way from an origin to a primary trip destination without a route diversion and that are existing trips on the roadway network. As a conservative approach, since the actual land uses are still yet to be determined, no pass-by was calculated for the project.

Transit Reduction

At the direction of the Village, it was indicated that premium transit service operations would be provided within the redeveloped downtown study area. This may include a trolley/shuttle service, park and ride lots, bicycle racks and/or lockers. Therefore, a conservative transit reduction percentage of 10% was applied to the driveway trips.

Net New Project Trips

Net new, external vehicle trips are equal to the gross project trips minus the internal capture trips, transit reduction trips and the pass-by capture trips.

Detailed trip generation calculations are contained in **Appendix H** and summarized in **Tables 16** through **18**.

Table 16 – Trip Generation Phase 1 (2025)

2025 – Phase 1																			
A.M. Peak Hour Volumes																			
Development	Lot No.	Land Uses	ITE Land Use Code	Description	Unit	Total Units	Rate/Unit	Trips	Equation	Transit Reduction		Total Trips	Internal Capture		Total Trips	Directional Distribution			
										%	Trips		%	Trips		Entering		Exiting	
CBD Core District	1	Residential	**223**	Mid-Rise Apartment	Dwelling Units	240	0.30	72	86	10%	9	77	20%	17	60	31.0%	19	69.0%	41
		Office	**710**	General Office Building	ksf	10	1.56	16	31	10%	3	28	20%	6	22	88.0%	19	12.0%	3
	2	Residential	**223**	Mid-Rise Apartment	Dwelling Units	176	0.30	53	60	10%	6	54	20%	12	42	31.0%	13	69.0%	29
	3	Residential	**223**	Mid-Rise Apartment	Dwelling Units	176	0.30	53	60	10%	6	54	20%	12	42	31.0%	13	69.0%	29
		Office	**710**	General Office Building	ksf	12	1.56	19	36	10%	4	32	20%	7	25	88.0%	22	12.0%	3
	4	Residential	**223**	Mid-Rise Apartment	Dwelling Units	88	0.30	27	24	10%	3	24	20%	5	19	31.0%	6	69.0%	13
	5	Residential	**223**	Mid-Rise Apartment	Dwelling Units	176	0.30	53	60	10%	6	54	20%	12	42	31.0%	13	69.0%	29
		Office	**710**	General Office Building	ksf	12	1.56	19	36	10%	4	32	20%	7	25	88.0%	22	12.0%	3
	6	Residential	**223**	Mid-Rise Apartment	Dwelling Units	88	0.30	27	24	10%	3	24	20%	5	19	31.0%	6	69.0%	13
	7	Residential	**223**	Mid-Rise Apartment	Dwelling Units	176	0.30	53	60	10%	6	54	20%	12	42	31.0%	13	69.0%	29
		Office	**710**	General Office Building	ksf	12	1.56	19	36	10%	4	32	20%	7	25	88.0%	22	12.0%	3
	8	Residential	**223**	Mid-Rise Apartment	Dwelling Units	88	0.30	27	24	10%	3	24	20%	5	19	31.0%	6	69.0%	13
	9	Office	**710**	General Office Building	ksf	10	1.56	16	31	10%	3	28	20%	6	22	88.0%	19	12.0%	3
	11	Office	**710**	General Office Building	ksf	70	1.56	110	144	10%	14	130	20%	29	101	88.0%	89	12.0%	12
	12	Residential	**223**	Mid-Rise Apartment	Dwelling Units	112	0.30	34	33	10%	3	31	20%	7	24	31.0%	8	69.0%	17
		Office	**710**	General Office Building	ksf	6	1.56	10	21	10%	2	19	20%	4	15	88.0%	13	12.0%	2
Total Trip Generation (A.M. Peak) - Phase 1															**544**	**Entering**	**303**	**Exiting**	**242**

Table 16, cont. – Trip Generation Phase 1 (2025)

2025 – Phase 1																				
MID. Peak Hour Volumes																				
Development	Lot No.	Land Uses	ITE Land Use Code	Description	Unit	Total Units	Rate/Unit	Trips	Equation	Transit Reduction		Total Trips	Internal Capture		Total Trips	Directional Distribution			
										%	Trips		%	Trips		Entering		Exiting	
CBD Core District	1	Residential	**223**	Mid-Rise Apartment	Dwelling Units	240	0.39	94	105	10%	11	94	20%	21	73	58.0%	42	42.0%	31
		Office	**710**	General Office Building	ksf	10	1.49	15	90	10%	9	81	20%	18	63	17.0%	11	83.0%	52
	2	Residential	**223**	Mid-Rise Apartment	Dwelling Units	176	0.39	69	74	10%	7	67	20%	15	52	58.0%	30	42.0%	22
	3	Residential	**223**	Mid-Rise Apartment	Dwelling Units	176	0.39	69	74	10%	7	67	20%	15	52	58.0%	30	42.0%	22
		Office	**710**	General Office Building	ksf	12	1.49	18	92	10%	9	83	20%	18	65	17.0%	11	83.0%	54
	4	Residential	**223**	Mid-Rise Apartment	Dwelling Units	88	0.39	35	32	10%	4	31	20%	6	25	58.0%	14	42.0%	10
	5	Residential	**223**	Mid-Rise Apartment	Dwelling Units	176	0.39	69	74	10%	7	67	20%	15	52	58.0%	30	42.0%	22
		Office	**710**	General Office Building	ksf	12	1.49	18	92	10%	9	83	20%	18	65	17.0%	11	83.0%	54
	6	Residential	**223**	Mid-Rise Apartment	Dwelling Units	88	0.39	35	32	10%	4	31	20%	6	25	58.0%	14	42.0%	10
	7	Residential	**223**	Mid-Rise Apartment	Dwelling Units	176	0.39	69	74	10%	7	67	20%	15	52	58.0%	30	42.0%	22
		Office	**710**	General Office Building	ksf	12	1.49	18	92	10%	9	83	20%	18	65	17.0%	11	83.0%	54
	8	Residential	**223**	Mid-Rise Apartment	Dwelling Units	88	0.39	35	32	10%	4	31	20%	6	25	58.0%	14	42.0%	10
	9	Office	**710**	General Office Building	ksf	10	1.49	15	90	10%	9	81	20%	18	63	17.0%	11	83.0%	52
	11	Office	**710**	General Office Building	ksf	70	1.49	105	157	10%	16	141	20%	31	110	17.0%	19	83.0%	91
	12	Residential	**223**	Mid-Rise Apartment	Dwelling Units	112	0.39	44	43	10%	4	40	20%	9	31	58.0%	18	42.0%	13
		Office	**710**	General Office Building	ksf	6	1.49	9	86	10%	9	77	20%	17	60	17.0%	10	83.0%	50
Total Trip Generation (MID. Peak) - Phase 1															**876**	**Entering**	**306**	**Exiting**	**569**

Table 16, cont. – Trip Generation Phase 1 (2025)

2025 – Phase 1																			
P.M. Peak Hour Volumes																			
Development	Lot No.	Land Uses	ITE Land Use Code	Description	Unit	Total Units	Rate/Unit	Trips	Equation	Transit Reduction		Total Trips	Internal Capture		Total Trips	Directional Distribution			
										%	Trips		%	Trips		Entering		Exiting	
CBD Core District	1	Residential	**223**	Mid-Rise Apartment	Dwelling Units	240	0.39	94	105	10%	11	94	20%	21	73	58.0%	42	42.0%	31
		Office	**710**	General Office Building	ksf	10	1.49	15	90	10%	9	81	20%	18	63	17.0%	11	83.0%	52
	2	Residential	**223**	Mid-Rise Apartment	Dwelling Units	176	0.39	69	74	10%	7	67	20%	15	52	58.0%	30	42.0%	22
	3	Residential	**223**	Mid-Rise Apartment	Dwelling Units	176	0.39	69	74	10%	7	67	20%	15	52	58.0%	30	42.0%	22
		Office	**710**	General Office Building	ksf	12	1.49	18	92	10%	9	83	20%	18	65	17.0%	11	83.0%	54
	4	Residential	**223**	Mid-Rise Apartment	Dwelling Units	88	0.39	35	32	10%	4	31	20%	6	25	58.0%	14	42.0%	10
	5	Residential	**223**	Mid-Rise Apartment	Dwelling Units	176	0.39	69	74	10%	7	67	20%	15	52	58.0%	30	42.0%	22
		Office	**710**	General Office Building	ksf	12	1.49	18	92	10%	9	83	20%	18	65	17.0%	11	83.0%	54
	6	Residential	**223**	Mid-Rise Apartment	Dwelling Units	88	0.39	35	32	10%	4	31	20%	6	25	58.0%	14	42.0%	10
	7	Residential	**223**	Mid-Rise Apartment	Dwelling Units	176	0.39	69	74	10%	7	67	20%	15	52	58.0%	30	42.0%	22
		Office	**710**	General Office Building	ksf	12	1.49	18	92	10%	9	83	20%	18	65	17.0%	11	83.0%	54
	8	Residential	**223**	Mid-Rise Apartment	Dwelling Units	88	0.39	35	32	10%	4	31	20%	6	25	58.0%	14	42.0%	10
	9	Office	**710**	General Office Building	ksf	10	1.49	15	90	10%	9	81	20%	18	63	17.0%	11	83.0%	52
	11	Office	**710**	General Office Building	ksf	70	1.49	105	157	10%	16	141	20%	31	110	17.0%	19	83.0%	91
	12	Residential	**223**	Mid-Rise Apartment	Dwelling Units	112	0.39	44	43	10%	4	40	20%	9	31	58.0%	18	42.0%	13
		Office	**710**	General Office Building	ksf	6	1.49	9	86	10%	9	77	20%	17	60	17.0%	10	83.0%	50
Total Trip Generation (P.M. Peak) - Phase 1															**876**	**Entering**	**306**	**Exiting**	**569**

Table 17 – Trip Generation Phase (2035)

2035 – Phase 2

A.M. Peak Hour Volumes

Development	Lot No.	Land Uses	ITE Land Use Code	Description	Unit	Total Units	Rate/Unit	Trips	Equation	Transit Reduction		Total Trips	Internal Capture		Total Trips	Directional Distribution			
										%	Trips		%	Trips		Entering		Exiting	
Central Mixed Use District	1	Residential	**223**	Mid-Rise Apartment	Dwelling Units	147	0.30	45	48	10%	5	43	20%	10	33	31.0%	10	69.0%	23
	2	Residential	**223**	Mid-Rise Apartment	Dwelling Units	80	0.30	24	20	10%	2	22	20%	4	18	31.0%	6	69.0%	12
	3	Residential	**223**	Mid-Rise Apartment	Dwelling Units	41	0.30	13	4	10%	1	12	20%	1	11	31.0%	3	69.0%	8
	4	Residential	**223**	Mid-Rise Apartment	Dwelling Units	77	0.30	24	19	10%	2	22	20%	4	18	31.0%	6	69.0%	13
	5	Residential	**223**	Mid-Rise Apartment	Dwelling Units	52	0.30	16	9	10%	2	14	20%	2	12	31.0%	4	69.0%	8
	6	Residential	**223**	Mid-Rise Apartment	Dwelling Units	53	0.30	16	9	10%	2	14	20%	2	12	31.0%	4	69.0%	8
	7	Residential	**223**	Mid-Rise Apartment	Dwelling Units	50	0.30	15	8	10%	2	13	20%	2	11	31.0%	4	69.0%	8
	8	Residential	**223**	Mid-Rise Apartment	Dwelling Units	51	0.30	16	8	10%	2	14	20%	2	12	31.0%	4	69.0%	9
	9	Residential	**223**	Mid-Rise Apartment	Dwelling Units	48	0.30	15	7	10%	2	13	20%	1	12	31.0%	4	69.0%	8
	10	Residential	**223**	Mid-Rise Apartment	Dwelling Units	57	0.30	18	11	10%	2	16	20%	2	14	31.0%	4	69.0%	10
	11	Residential	**223**	Mid-Rise Apartment	Dwelling Units	89	0.30	27	24	10%	3	24	20%	5	19	31.0%	6	69.0%	13
		Office	**710**	General Office Building	ksf	53	1.49	80	116	10%	12	104	20%	23	81	88.0%	71	12.0%	10
Total Trip Generation (A.M. Peak) - Phase 2															**254**	**Entering**	**126**	**Exiting**	**130**

MID. Peak Hour Volumes

Development	Lot No.	Land Uses	ITE Land Use Code	Description	Unit	Total Units	Rate/Unit	Trips	Equation	Transit Reduction		Total Trips	Internal Capture		Total Trips	Directional Distribution			
										%	Trips		%	Trips		Entering		Exiting	
Central Mixed Use District	1	Residential	**223**	Mid-Rise Apartment	Dwelling Units	147	0.39	58	60	10%	6	54	20%	12	42	58.0%	24	42.0%	18
	2	Residential	**223**	Mid-Rise Apartment	Dwelling Units	80	0.39	32	28	10%	3	29	20%	6	23	58.0%	14	42.0%	10
	3	Residential	**223**	Mid-Rise Apartment	Dwelling Units	41	0.39	16	9	10%	2	14	20%	2	12	58.0%	7	42.0%	5
	4	Residential	**223**	Mid-Rise Apartment	Dwelling Units	77	0.39	31	26	10%	3	28	20%	5	23	58.0%	13	42.0%	10
	5	Residential	**223**	Mid-Rise Apartment	Dwelling Units	52	0.39	21	14	10%	2	19	20%	3	16	58.0%	9	42.0%	7
	6	Residential	**223**	Mid-Rise Apartment	Dwelling Units	53	0.39	21	15	10%	2	19	20%	3	16	58.0%	9	42.0%	7
	7	Residential	**223**	Mid-Rise Apartment	Dwelling Units	50	0.39	20	13	10%	2	18	20%	3	15	58.0%	9	42.0%	6
	8	Residential	**223**	Mid-Rise Apartment	Dwelling Units	51	0.39	20	14	10%	2	18	20%	3	15	58.0%	9	42.0%	6
	9	Residential	**223**	Mid-Rise Apartment	Dwelling Units	48	0.39	19	12	10%	2	17	20%	2	15	58.0%	8	42.0%	6
	10	Residential	**223**	Mid-Rise Apartment	Dwelling Units	57	0.39	23	17	10%	2	21	20%	3	18	58.0%	10	42.0%	7
	11	Residential	**223**	Mid-Rise Apartment	Dwelling Units	89	0.39	35	32	10%	4	31	20%	6	25	58.0%	14	42.0%	10
		Office	**710**	General Office Building	ksf	53	1.49	79	138	10%	14	124	20%	28	96	17.0%	16	83.0%	80
Total Trip Generation (MID. Peak) - Phase 2															**316**	**Entering**	**142**	**Exiting**	**172**

Table 17, cont – Trip Generation Phase 2 (2025)

2035 – Phase 2																			
P.M. Peak Hour Volumes																			
Development	Lot No.	Land Uses	ITE Land Use Code	Description	Unit	Total Units	Rate/Unit	Trips	Equation	Transit Reduction		Total Trips	Internal Capture		Total Trips	Directional Distribution			
										%	Trips		%	Trips		Entering		Exiting	
Central Mixed Use District	1	Residential	**223**	Mid-Rise Apartment	Dwelling Units	147	0.39	58	60	10%	6	54	20%	12	42	58.0%	24	42.0%	18
	2	Residential	**223**	Mid-Rise Apartment	Dwelling Units	80	0.39	32	28	10%	3	29	20%	6	23	58.0%	14	42.0%	10
	3	Residential	**223**	Mid-Rise Apartment	Dwelling Units	41	0.39	16	9	10%	2	14	20%	2	12	58.0%	7	42.0%	5
	4	Residential	**223**	Mid-Rise Apartment	Dwelling Units	77	0.39	31	26	10%	3	28	20%	5	23	58.0%	13	42.0%	10
	5	Residential	**223**	Mid-Rise Apartment	Dwelling Units	52	0.39	21	14	10%	2	19	20%	3	16	58.0%	9	42.0%	7
	6	Residential	**223**	Mid-Rise Apartment	Dwelling Units	53	0.39	21	15	10%	2	19	20%	3	16	58.0%	9	42.0%	7
	7	Residential	**223**	Mid-Rise Apartment	Dwelling Units	50	0.39	20	13	10%	2	18	20%	3	15	58.0%	9	42.0%	6
	8	Residential	**223**	Mid-Rise Apartment	Dwelling Units	51	0.39	20	14	10%	2	18	20%	3	15	58.0%	9	42.0%	6
	9	Residential	**223**	Mid-Rise Apartment	Dwelling Units	48	0.39	19	12	10%	2	17	20%	2	15	58.0%	8	42.0%	6
	10	Residential	**223**	Mid-Rise Apartment	Dwelling Units	57	0.39	23	17	10%	2	21	20%	3	18	58.0%	10	42.0%	7
	11	Residential	**223**	Mid-Rise Apartment	Dwelling Units	89	0.39	35	32	10%	4	31	20%	6	25	58.0%	14	42.0%	10
		Office	**710**	General Office Building	ksf	53	1.49	79	138	10%	14	124	20%	28	96	17.0%	16	83.0%	80
Total Trip Generation (P.M. Peak) - Phase 2															**316**	**Entering**	**142**	**Exiting**	**172**

Table 18 – Trip Generation Phase 3 (2045)

2045 – Phase 3																				
A.M. Peak Hour Volumes																				
Development	Lot No.	Land Uses	ITE Land Use Code	Description	Unit	Total Units	Rate/Unit	Trips	Equation	Transit Reduction		Total Trips	Internal Capture		Total Trips	Directional Distribution			
										%	Trips		%	Trips		Entering		Exiting	
Perimeter District	1	Residential	**223**	Mid-Rise Apartment	Dwelling Units	75	0.30	23	18	10%	2	21	20%	4	17	31.0%	5	69.0%	12
		Office	**710**	General Office Building	ksf	44.81	1.56	70	101	10%	10	91	20%	20	71	88.0%	62	12.0%	8
	2	Residential	**223**	Mid-Rise Apartment	Dwelling Units	75	0.30	23	18	10%	2	21	20%	4	17	31.0%	5	69.0%	12
		Office	**710**	General Office Building	ksf	44.81	1.56	70	101	10%	10	91	20%	20	71	88.0%	62	12.0%	8
	3	Residential	**223**	Mid-Rise Apartment	Dwelling Units	75	0.30	23	18	10%	2	21	20%	4	17	31.0%	5	69.0%	12
		Office	**710**	General Office Building	ksf	44.81	1.56	70	101	10%	10	91	20%	20	71	88.0%	62	12.0%	8
	4	Residential	**223**	Mid-Rise Apartment	Dwelling Units	75	0.30	23	18	10%	2	21	20%	4	17	31.0%	5	69.0%	12
		Office	**710**	General Office Building	ksf	44.81	1.56	70	101	10%	10	91	20%	20	71	88.0%	62	12.0%	8
	5	Residential	**223**	Mid-Rise Apartment	Dwelling Units	75	0.30	23	18	10%	2	21	20%	4	17	31.0%	5	69.0%	12
		Office	**710**	General Office Building	ksf	44.81	1.56	70	101	10%	10	91	20%	20	71	88.0%	62	12.0%	8
	6	Residential	**223**	Mid-Rise Apartment	Dwelling Units	75	0.30	23	18	10%	2	21	20%	4	17	31.0%	5	69.0%	12
		Office	**710**	General Office Building	ksf	44.81	1.56	70	101	10%	10	91	20%	20	71	88.0%	62	12.0%	8
Total Trip Generation - Perimeter District															**529**	**Entering**	**402**	**Exiting**	**120**
North Mixed Use District	1	Residential	**223**	Mid-Rise Apartment	Dwelling Units	50	0.30	15	8	10%	2	13	20%	2	11	31.0%	4	69.0%	8
	2	Residential	**223**	Mid-Rise Apartment	Dwelling Units	50	0.30	15	8	10%	2	13	20%	2	11	31.0%	4	69.0%	8
	3	Residential	**223**	Mid-Rise Apartment	Dwelling Units	50	0.30	15	8	10%	2	13	20%	2	11	31.0%	4	69.0%	8
	4	Residential	**223**	Mid-Rise Apartment	Dwelling Units	50	0.30	15	8	10%	2	13	20%	2	11	31.0%	4	69.0%	8
	5	Residential	**223**	Mid-Rise Apartment	Dwelling Units	50	0.30	15	8	10%	2	13	20%	2	11	31.0%	4	69.0%	8
	6	Residential	**223**	Mid-Rise Apartment	Dwelling Units	50	0.30	15	8	10%	2	13	20%	2	11	31.0%	4	69.0%	8
		Office	**710**	General Office Building	ksf	141	1.56	220	252	10%	25	227	20%	50	177	88.0%	155	12.0%	21
	7	Residential	**223**	Mid-Rise Apartment	Dwelling Units	50	0.30	15	8	10%	2	13	20%	2	11	31.0%	4	69.0%	8
		Office	**710**	General Office Building	ksf	145	1.56	227	258	10%	26	232	20%	52	180	88.0%	159	12.0%	22
	8	Residential	**223**	Mid-Rise Apartment	Dwelling Units	50	0.30	15	8	10%	2	13	20%	2	11	31.0%	4	69.0%	8
	9	Residential	**223**	Mid-Rise Apartment	Dwelling Units	50	0.30	15	8	10%	2	13	20%	2	11	31.0%	4	69.0%	8
	10	Residential	**223**	Mid-Rise Apartment	Dwelling Units	50	0.30	15	8	10%	2	13	20%	2	11	31.0%	4	69.0%	8
	11	Residential	**223**	Mid-Rise Apartment	Dwelling Units	50	0.30	15	8	10%	2	13	20%	2	11	31.0%	4	69.0%	8
Total Trip Generation - North Mixed Use District															**482**	**Entering**	**358**	**Exiting**	**131**

Table 18, cont. – Trip Generation Phase 3 (2045)

Development	Lot No.	Land Uses	ITE Land Use Code	Description	Unit	Total Units	Rate/Unit	Trips	Equation	Transit Reduction		Total Trips	Internal Capture		Total Trips	Directional Distribution			
										%	Trips		%	Trips		Entering		Exiting	
US 1 Island District	1	Residential	**223**	Mid-Rise Apartment	Dwelling Units	83	0.30	25	21	10%	3	22	20%	4	18	31.0%	6	69.0%	12
	2	Residential	**223**	Mid-Rise Apartment	Dwelling Units	69	0.30	21	16	10%	2	19	20%	3	16	31.0%	5	69.0%	11
	3	Residential	**223**	Mid-Rise Apartment	Dwelling Units	102	0.30	31	29	10%	3	28	20%	6	22	31.0%	7	69.0%	15
	4	Residential	**223**	Mid-Rise Apartment	Dwelling Units	107	0.30	33	31	10%	3	30	20%	6	24	31.0%	7	69.0%	16
	5	Residential	**223**	Mid-Rise Apartment	Dwelling Units	100	0.30	30	28	10%	3	27	20%	6	21	31.0%	7	69.0%	15
	6	Residential	**223**	Mid-Rise Apartment	Dwelling Units	134	0.30	41	42	10%	4	38	20%	8	30	31.0%	9	69.0%	20
		Office	**710**	General Office Building	ksf	70	1.56	109	144	10%	14	130	20%	29	101	88.0%	89	12.0%	12
	7	Residential	**223**	Mid-Rise Apartment	Dwelling Units	102	0.30	31	29	10%	3	28	20%	6	22	31.0%	7	69.0%	15
		Office	**710**	General Office Building	ksf	294	1.56	460	454	10%	46	414	20%	91	323	88.0%	284	12.0%	39
	8	Residential	**223**	Mid-Rise Apartment	Dwelling Units	150	0.30	45	49	10%	5	44	20%	10	34	31.0%	11	69.0%	24
		Office	**710**	General Office Building	ksf	462	1.56	722	652	10%	72	650	20%	130	520	88.0%	457	12.0%	62
	9	Residential	**223**	Mid-Rise Apartment	Dwelling Units	104	0.30	32	30	10%	3	29	20%	6	23	31.0%	7	69.0%	16
	10	Residential	**223**	Mid-Rise Apartment	Dwelling Units	116	0.30	35	35	10%	4	31	20%	7	24	31.0%	7	69.0%	17
	11	Residential	**223**	Mid-Rise Apartment	Dwelling Units	137	0.30	42	44	10%	4	40	20%	9	31	31.0%	10	69.0%	22
	12	Residential	**223**	Mid-Rise Apartment	Dwelling Units	104	0.30	32	30	10%	3	29	20%	6	23	31.0%	7	69.0%	16
	13	Residential	**223**	Mid-Rise Apartment	Dwelling Units	120	0.30	36	37	10%	4	33	20%	7	26	31.0%	8	69.0%	18
	14	Residential	**223**	Mid-Rise Apartment	Dwelling Units	896	0.30	269	355	10%	36	319	20%	71	248	31.0%	77	69.0%	171
Total Trip Generation - US 1 Island District															**1506**	**Entering**	**1005**	**Exiting**	**501**
Total Trip Generation (A.M. Peak) - Phase 3															**2517**	**Entering**	**1765**	**Exiting**	**752**

Table 18, cont. – Trip Generation Phase 3 (2045)

2045 – Phase 3																				
MID. Peak Hour Volumes																				
Development	Lot No.	Land Uses	ITE Land Use Code	Description	Unit	Total Units	Rate/Unit	Trips	Equation	Transit Reduction		Total Trips	Internal Capture		Total Trips	Directional Distribution			
										%	Trips		%	Trips		Entering		Exiting	
Perimeter District	1	Residential	**223**	Mid-Rise Apartment	Dwelling Units	75	0.39	30	25	10%	3	27	20%	5	22	58.0%	13	42.0%	9
		Office	**710**	General Office Building	ksf	44.81	1.49	67	129	10%	13	116	20%	26	90	17.0%	15	83.0%	75
	2	Residential	**223**	Mid-Rise Apartment	Dwelling Units	75	0.39	30	25	10%	3	27	20%	5	22	58.0%	13	42.0%	9
		Office	**710**	General Office Building	ksf	44.81	1.49	67	129	10%	13	116	20%	26	90	17.0%	15	83.0%	75
	3	Residential	**223**	Mid-Rise Apartment	Dwelling Units	75	0.39	30	25	10%	3	27	20%	5	22	58.0%	13	42.0%	9
		Office	**710**	General Office Building	ksf	44.81	1.49	67	129	10%	13	116	20%	26	90	17.0%	15	83.0%	75
	4	Residential	**223**	Mid-Rise Apartment	Dwelling Units	75	0.39	30	25	10%	3	27	20%	5	22	58.0%	13	42.0%	9
		Office	**710**	General Office Building	ksf	44.81	1.49	67	129	10%	13	116	20%	26	90	17.0%	15	83.0%	75
	5	Residential	**223**	Mid-Rise Apartment	Dwelling Units	75	0.39	30	25	10%	3	27	20%	5	22	58.0%	13	42.0%	9
		Office	**710**	General Office Building	ksf	44.81	1.49	67	129	10%	13	116	20%	26	90	17.0%	15	83.0%	75
	6	Residential	**223**	Mid-Rise Apartment	Dwelling Units	75	0.39	30	25	10%	3	27	20%	5	22	58.0%	13	42.0%	9
		Office	**710**	General Office Building	ksf	44.81	1.49	67	129	10%	13	116	20%	26	90	17.0%	15	83.0%	75
Total Trip Generation - Perimeter District															**673**	**Entering**	**168**	**Exiting**	**504**
North Mixed Use District	1	Residential	**223**	Mid-Rise Apartment	Dwelling Units	50	0.39	20	13	10%	2	18	20%	3	15	58.0%	9	42.0%	6
	2	Residential	**223**	Mid-Rise Apartment	Dwelling Units	50	0.39	20	13	10%	2	18	20%	3	15	58.0%	9	42.0%	6
	3	Residential	**223**	Mid-Rise Apartment	Dwelling Units	50	0.39	20	13	10%	2	18	20%	3	15	58.0%	9	42.0%	6
	4	Residential	**223**	Mid-Rise Apartment	Dwelling Units	50	0.39	20	13	10%	2	18	20%	3	15	58.0%	9	42.0%	6
	5	Residential	**223**	Mid-Rise Apartment	Dwelling Units	50	0.39	20	13	10%	2	18	20%	3	15	58.0%	9	42.0%	6
	6	Residential	**223**	Mid-Rise Apartment	Dwelling Units	50	0.39	20	13	10%	2	18	20%	3	15	58.0%	9	42.0%	6
		Office	**710**	General Office Building	ksf	141	1.49	210	237	10%	24	213	20%	47	166	17.0%	28	83.0%	137
	7	Residential	**223**	Mid-Rise Apartment	Dwelling Units	50	0.39	20	13	10%	2	18	20%	3	15	58.0%	9	42.0%	6
		Office	**710**	General Office Building	ksf	145	1.49	217	242	10%	24	218	20%	48	170	17.0%	29	83.0%	141
	8	Residential	**223**	Mid-Rise Apartment	Dwelling Units	50	0.39	20	13	10%	2	18	20%	3	15	58.0%	9	42.0%	6
	9	Residential	**223**	Mid-Rise Apartment	Dwelling Units	50	0.39	20	13	10%	2	18	20%	3	15	58.0%	9	42.0%	6
	10	Residential	**223**	Mid-Rise Apartment	Dwelling Units	50	0.39	20	13	10%	2	18	20%	3	15	58.0%	9	42.0%	6
	11	Residential	**223**	Mid-Rise Apartment	Dwelling Units	50	0.39	20	13	10%	2	18	20%	3	15	58.0%	9	42.0%	6
Total Trip Generation - North Mixed Use District															**505**	**Entering**	**156**	**Exiting**	**344**

Table 18, cont. – Trip Generation Phase 3 (2045)

Development	Lot No.	Land Uses	ITE Land Use Code	Description	Unit	Total Units	Rate/Unit	Trips	Equation	Transit Reduction		Total Trips	Internal Capture		Total Trips	Directional Distribution			
										%	Trips		%	Trips		Entering		Exiting	
US 1 Island District	1	Residential	**223**	Mid-Rise Apartment	Dwelling Units	83	0.39	33	29	10%	3	30	20%	6	24	58.0%	14	42.0%	10
	2	Residential	**223**	Mid-Rise Apartment	Dwelling Units	69	0.39	27	23	10%	2	25	20%	5	20	58.0%	12	42.0%	8
	3	Residential	**223**	Mid-Rise Apartment	Dwelling Units	102	0.39	40	38	10%	4	34	20%	8	27	58.0%	15	42.0%	11
	4	Residential	**223**	Mid-Rise Apartment	Dwelling Units	107	0.39	42	41	10%	4	37	20%	8	29	58.0%	17	42.0%	12
	5	Residential	**223**	Mid-Rise Apartment	Dwelling Units	100	0.39	39	37	10%	4	33	20%	7	26	58.0%	15	42.0%	11
	6	Residential	**223**	Mid-Rise Apartment	Dwelling Units	134	0.39	53	54	10%	5	49	20%	11	38	58.0%	22	42.0%	16
		Office	**710**	General Office Building	ksf	70	1.49	104	157	10%	16	141	20%	31	110	17.0%	19	83.0%	91
	7	Residential	**223**	Mid-Rise Apartment	Dwelling Units	102	0.39	40	38	10%	4	34	20%	8	27	58.0%	15	42.0%	11
		Office	**710**	General Office Building	ksf	294	1.49	439	409	10%	41	398	20%	82	316	17.0%	54	83.0%	263
	8	Residential	**223**	Mid-Rise Apartment	Dwelling Units	150	0.39	59	61	10%	6	55	20%	12	43	58.0%	25	42.0%	18
		Office	**710**	General Office Building	ksf	462	1.49	690	597	10%	60	630	20%	119	511	17.0%	87	83.0%	424
	9	Residential	**223**	Mid-Rise Apartment	Dwelling Units	104	0.39	41	39	10%	4	35	20%	8	27	58.0%	16	42.0%	11
	10	Residential	**223**	Mid-Rise Apartment	Dwelling Units	116	0.39	46	45	10%	5	41	20%	9	32	58.0%	18	42.0%	13
	11	Residential	**223**	Mid-Rise Apartment	Dwelling Units	137	0.39	54	55	10%	6	50	20%	11	39	58.0%	22	42.0%	16
	12	Residential	**223**	Mid-Rise Apartment	Dwelling Units	104	0.39	41	39	10%	4	35	20%	8	27	58.0%	16	42.0%	11
	13	Residential	**223**	Mid-Rise Apartment	Dwelling Units	120	0.39	47	47	10%	5	42	20%	9	33	58.0%	19	42.0%	14
	14	Residential	**223**	Mid-Rise Apartment	Dwelling Units	896	0.39	350	420	10%	42	378	20%	84	294	58.0%	171	42.0%	123
Total Trip Generation - US 1 Island District															**1621**	**Entering**	**557**	**Exiting**	**1063**
Total Trip Generation (MID. Peak) - Phase 3															**2799**	**Entering**	**881**	**Exiting**	**1911**

Table 18, cont. – Trip Generation Phase 3 (2045)

2045 – Phase 3																				
P.M. Peak Hour Volumes																				
Development	Lot No.	Land Uses	ITE Land Use Code	Description	Unit	Total Units	Rate/Unit	Trips	Equation	Transit Reduction		Total Trips	Internal Capture		Total Trips	Directional Distribution			
										%	Trips		%	Trips		Entering		Exiting	
Perimeter District	1	Residential	**223**	Mid-Rise Apartment	Dwelling Units	75	0.39	30	25	10%	3	27	20%	5	22	58.0%	13	42.0%	9
		Office	**710**	General Office Building	ksf	44.81	1.49	67	129	10%	13	116	20%	26	90	17.0%	15	83.0%	75
	2	Residential	**223**	Mid-Rise Apartment	Dwelling Units	75	0.39	30	25	10%	3	27	20%	5	22	58.0%	13	42.0%	9
		Office	**710**	General Office Building	ksf	44.81	1.49	67	129	10%	13	116	20%	26	90	17.0%	15	83.0%	75
	3	Residential	**223**	Mid-Rise Apartment	Dwelling Units	75	0.39	30	25	10%	3	27	20%	5	22	58.0%	13	42.0%	9
		Office	**710**	General Office Building	ksf	44.81	1.49	67	129	10%	13	116	20%	26	90	17.0%	15	83.0%	75
	4	Residential	**223**	Mid-Rise Apartment	Dwelling Units	75	0.39	30	25	10%	3	27	20%	5	22	58.0%	13	42.0%	9
		Office	**710**	General Office Building	ksf	44.81	1.49	67	129	10%	13	116	20%	26	90	17.0%	15	83.0%	75
	5	Residential	**223**	Mid-Rise Apartment	Dwelling Units	75	0.39	30	25	10%	3	27	20%	5	22	58.0%	13	42.0%	9
		Office	**710**	General Office Building	ksf	44.81	1.49	67	129	10%	13	116	20%	26	90	17.0%	15	83.0%	75
	6	Residential	**223**	Mid-Rise Apartment	Dwelling Units	75	0.39	30	25	10%	3	27	20%	5	22	58.0%	13	42.0%	9
		Office	**710**	General Office Building	ksf	44.81	1.49	67	129	10%	13	116	20%	26	90	17.0%	15	83.0%	75
Total Trip Generation - Perimeter District															**673**	**Entering**	**168**	**Exiting**	**504**
North Mixed Use District	1	Residential	**223**	Mid-Rise Apartment	Dwelling Units	50	0.39	20	13	10%	2	18	20%	3	15	58.0%	9	42.0%	6
	2	Residential	**223**	Mid-Rise Apartment	Dwelling Units	50	0.39	20	13	10%	2	18	20%	3	15	58.0%	9	42.0%	6
	3	Residential	**223**	Mid-Rise Apartment	Dwelling Units	50	0.39	20	13	10%	2	18	20%	3	15	58.0%	9	42.0%	6
	4	Residential	**223**	Mid-Rise Apartment	Dwelling Units	50	0.39	20	13	10%	2	18	20%	3	15	58.0%	9	42.0%	6
	5	Residential	**223**	Mid-Rise Apartment	Dwelling Units	50	0.39	20	13	10%	2	18	20%	3	15	58.0%	9	42.0%	6
	6	Residential	**223**	Mid-Rise Apartment	Dwelling Units	50	0.39	20	13	10%	2	18	20%	3	15	58.0%	9	42.0%	6
		Office	**710**	General Office Building	ksf	141	1.49	210	237	10%	24	213	20%	47	166	17.0%	28	83.0%	137
	7	Residential	**223**	Mid-Rise Apartment	Dwelling Units	50	0.39	20	13	10%	2	18	20%	3	15	58.0%	9	42.0%	6
		Office	**710**	General Office Building	ksf	145	1.49	217	242	10%	24	218	20%	48	170	17.0%	29	83.0%	141
	8	Residential	**223**	Mid-Rise Apartment	Dwelling Units	50	0.39	20	13	10%	2	18	20%	3	15	58.0%	9	42.0%	6
	9	Residential	**223**	Mid-Rise Apartment	Dwelling Units	50	0.39	20	13	10%	2	18	20%	3	15	58.0%	9	42.0%	6
	10	Residential	**223**	Mid-Rise Apartment	Dwelling Units	50	0.39	20	13	10%	2	18	20%	3	15	58.0%	9	42.0%	6
	11	Residential	**223**	Mid-Rise Apartment	Dwelling Units	50	0.39	20	13	10%	2	18	20%	3	15	58.0%	9	42.0%	6
Total Trip Generation - North Mixed Use District															**505**	**Entering**	**156**	**Exiting**	**344**

Table 18, cont. – Trip Generation Phase 3 (2045)

Development	Lot No.	Land Uses	ITE Land Use Code	Description	Unit	Total Units	Rate/Unit	Trips	Equation	Transit Reduction		Total Trips	Internal Capture		Total Trips	Directional Distribution			
										%	Trips		%	Trips		Entering		Exiting	
US 1 Island District	1	Residential	**223**	Mid-Rise Apartment	Dwelling Units	83	0.39	33	29	10%	3	30	20%	6	24	58.0%	14	42.0%	10
	2	Residential	**223**	Mid-Rise Apartment	Dwelling Units	69	0.39	27	23	10%	2	25	20%	5	20	58.0%	12	42.0%	8
	3	Residential	**223**	Mid-Rise Apartment	Dwelling Units	102	0.39	40	38	10%	4	34	20%	8	27	58.0%	15	42.0%	11
	4	Residential	**223**	Mid-Rise Apartment	Dwelling Units	107	0.39	42	41	10%	4	37	20%	8	29	58.0%	17	42.0%	12
	5	Residential	**223**	Mid-Rise Apartment	Dwelling Units	100	0.39	39	37	10%	4	33	20%	7	26	58.0%	15	42.0%	11
	6	Residential	**223**	Mid-Rise Apartment	Dwelling Units	134	0.39	53	54	10%	5	49	20%	11	38	58.0%	22	42.0%	16
		Office	**710**	General Office Building	ksf	70	1.49	104	157	10%	16	141	20%	31	110	17.0%	19	83.0%	91
	7	Residential	**223**	Mid-Rise Apartment	Dwelling Units	102	0.39	40	38	10%	4	34	20%	8	27	58.0%	15	42.0%	11
		Office	**710**	General Office Building	ksf	294	1.49	439	409	10%	41	398	20%	82	316	17.0%	54	83.0%	263
	8	Residential	**223**	Mid-Rise Apartment	Dwelling Units	150	0.39	59	61	10%	6	55	20%	12	43	58.0%	25	42.0%	18
		Office	**710**	General Office Building	ksf	462	1.49	690	597	10%	60	630	20%	119	511	17.0%	87	83.0%	424
	9	Residential	**223**	Mid-Rise Apartment	Dwelling Units	104	0.39	41	39	10%	4	35	20%	8	27	58.0%	16	42.0%	11
	10	Residential	**223**	Mid-Rise Apartment	Dwelling Units	116	0.39	46	45	10%	5	41	20%	9	32	58.0%	18	42.0%	13
	11	Residential	**223**	Mid-Rise Apartment	Dwelling Units	137	0.39	54	55	10%	6	50	20%	11	39	58.0%	22	42.0%	16
	12	Residential	**223**	Mid-Rise Apartment	Dwelling Units	104	0.39	41	39	10%	4	35	20%	8	27	58.0%	16	42.0%	11
	13	Residential	**223**	Mid-Rise Apartment	Dwelling Units	120	0.39	47	47	10%	5	42	20%	9	33	58.0%	19	42.0%	14
	14	Residential	**223**	Mid-Rise Apartment	Dwelling Units	896	0.39	350	420	10%	42	378	20%	84	294	58.0%	171	42.0%	123
Total Trip Generation - US 1 Island District															**1621**	**Entering**	**557**	**Exiting**	**1063**
Total Trip Generation (P.M. Peak) - Phase 3															**2799**	**Entering**	**881**	**Exiting**	**1911**

4.4.2. Trip Distribution

The likely distribution of project traffic was forecast for trips expected to be generated by the project. The trip distribution was based on a cardinal trip distribution obtained from the 2035 Cost Feasible Plan for the project site's traffic analysis zone (TAZ 1126, 1127 and 1128). The cardinal trip distribution is provided in **Table 19**. The detailed cardinal distribution is included in **Appendix I**.

Table 19 – Cardinal Distribution

Cardinal Direction	Percentage of Trips			
	TAZ 1126	**TAZ 1127**	**TAZ 1128**	**Average**
NNE	36.77%	15.29%	11.67%	21.24%
ENE	4.14%	1.96%	0.92%	2.34%
ESE	7.87%	5.39%	0.36%	4.54%
SSE	5.43%	11.46%	13.96%	10.28%
SSW	15.73%	36.62%	39.20%	30.52%
WSW	10.17%	16.50%	18.96%	15.21%
WNW	6.48%	5.53%	10.30%	7.44%
NNW	13.41%	7.24%	4.64%	8.43%
Total	**100.0%**	**100.0%**	**100.0%**	**100.00%**

4.4.3. Trip Assignment

Based upon the trip distribution described in the previous section, the total weekday A.M., MID, and P.M. peak project trips were assigned to the roadway network. **Figures 25** trough **42** show the trip distribution and assignment on the roadway network for each phase and peak period analyzed.

Figures 25 through **42** represent the trip distribution for the entering and exiting trips at the intersections and driveways within the defined study segment.

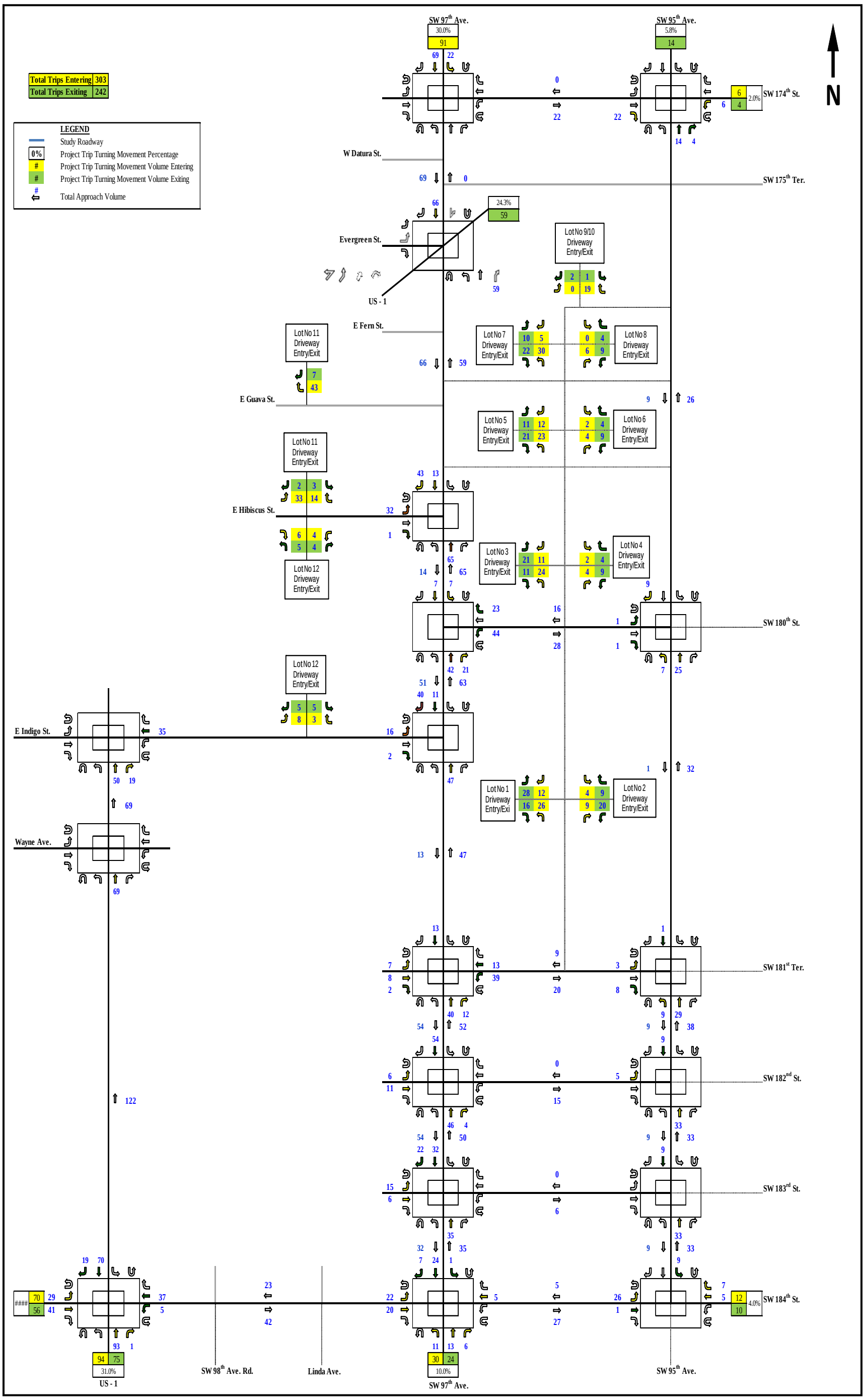

Figure 25 – A.M. Trip Distribution CBD Core District – Phase 1 (2025)

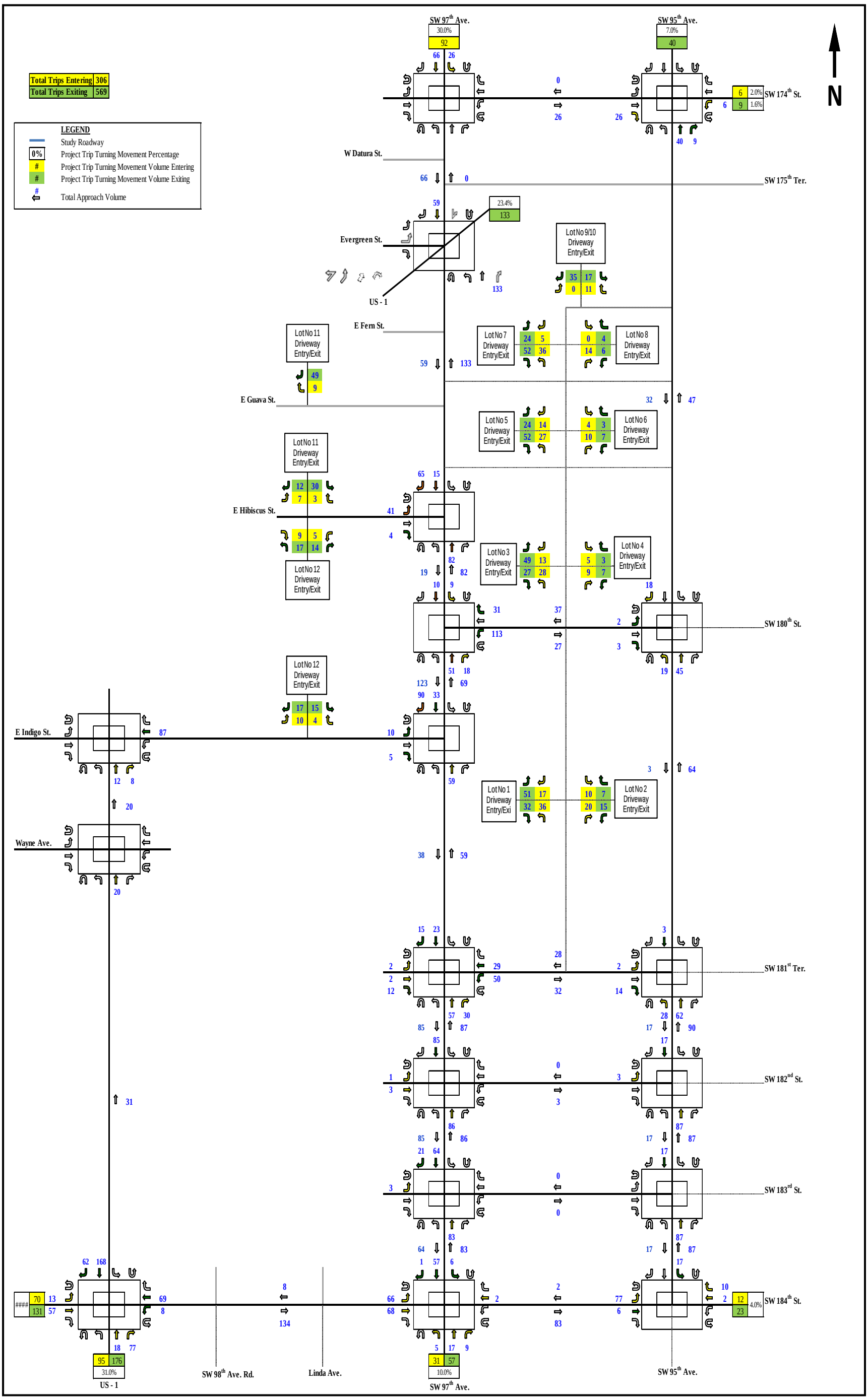

Figure 26 – Midday Trip Distribution CBD Core District – Phase 1 (2025)

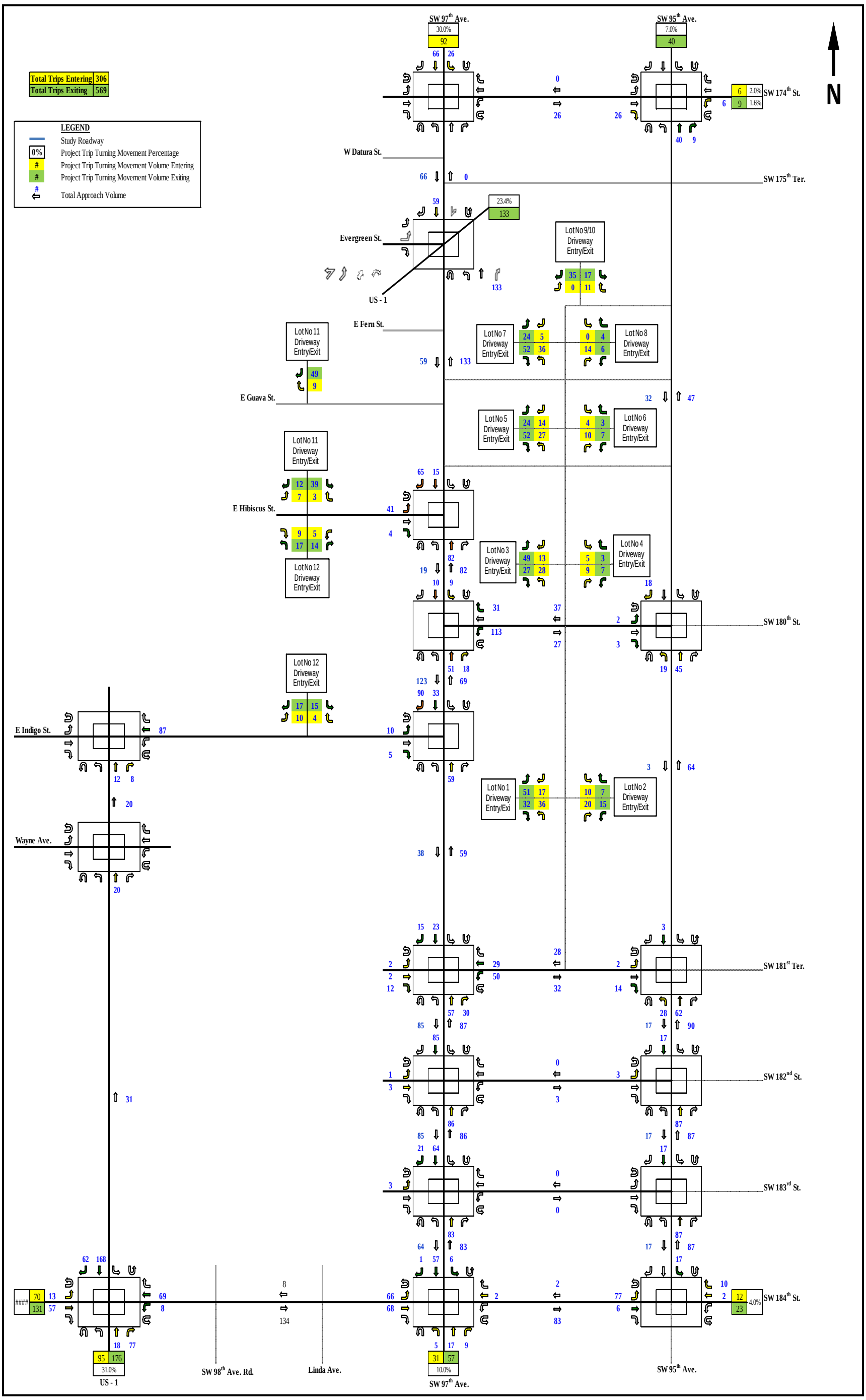

Figure 27 – PM Trip Distribution CBD Core District – Phase 1 (2025)

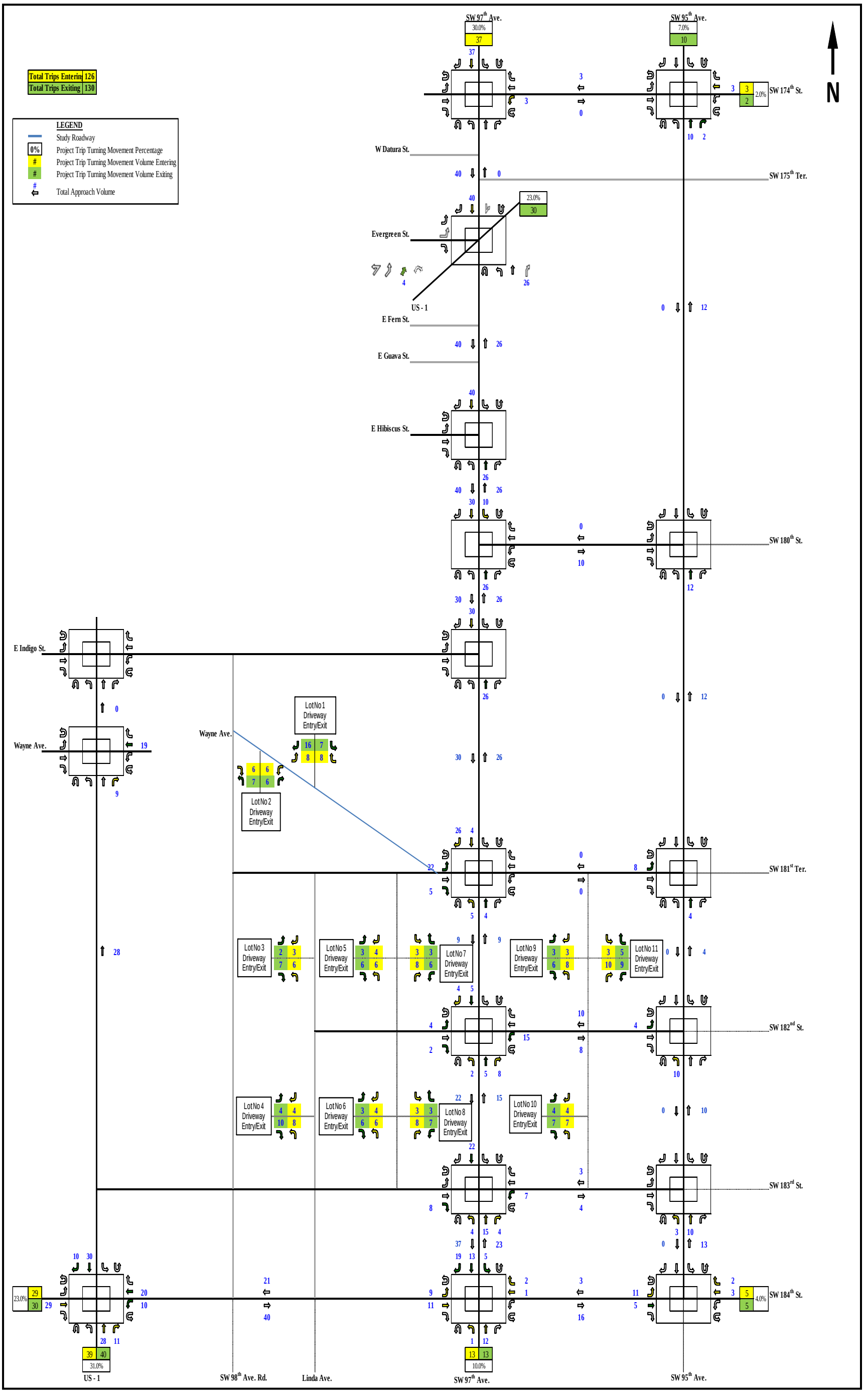

Figure 28 – AM Trip Distribution Central Mixed Use District – Phase 2 (2035)

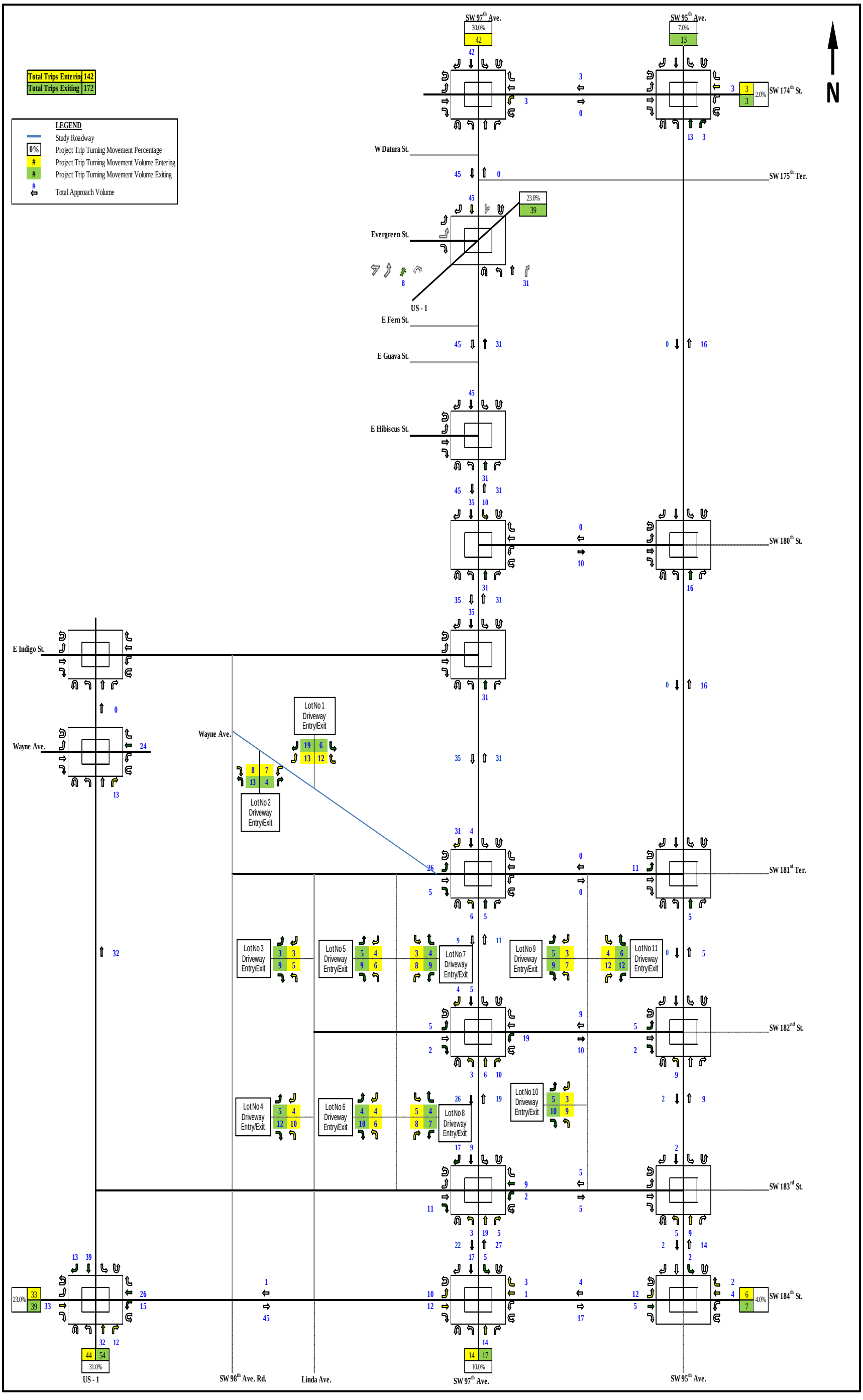

Figure 29 – Midday Trip Distribution Central Mixed Use District – Phase 2 (2035)

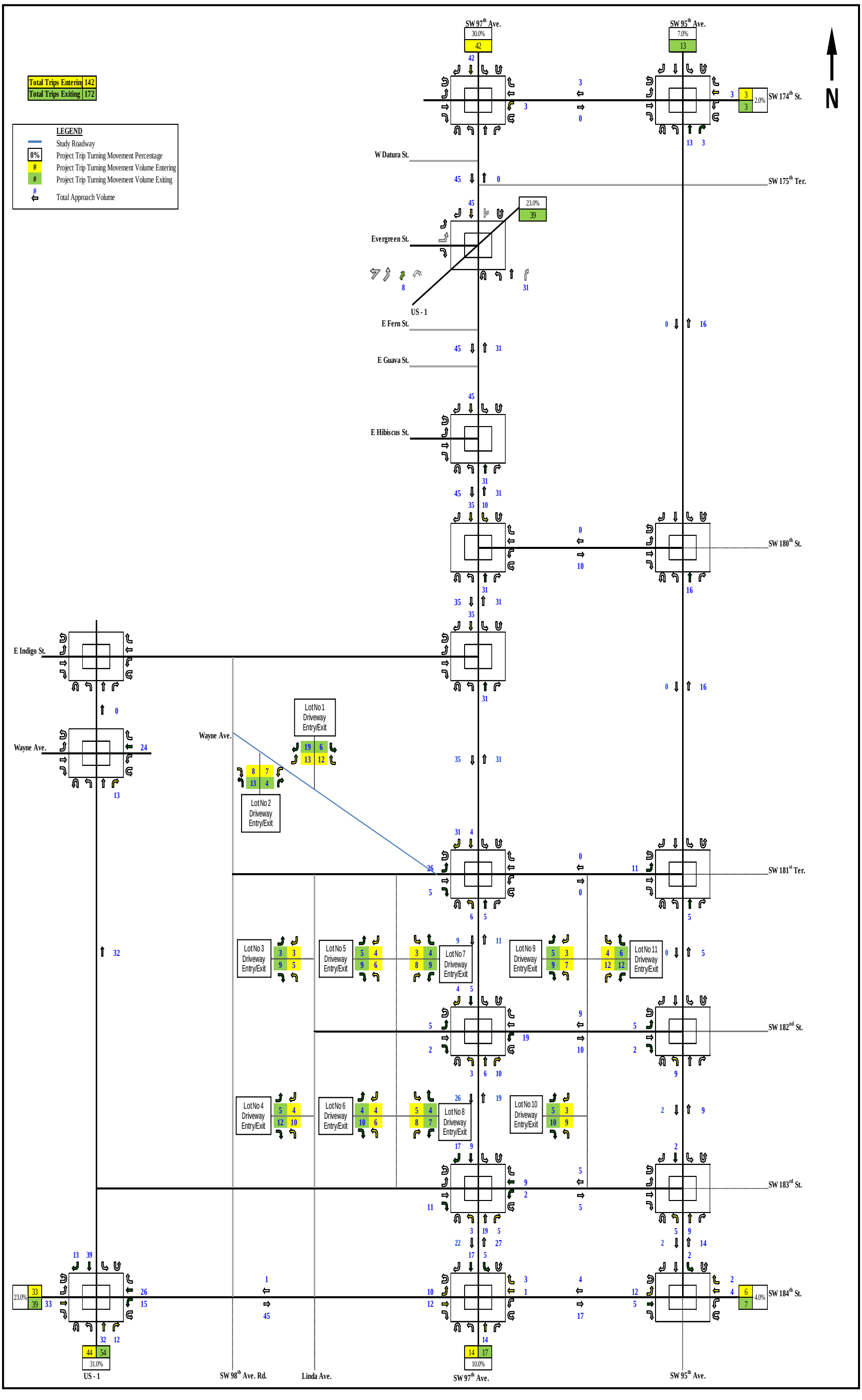

Figure 30 – PM Trip Distribution Central Mixed Use District – Phase 2 (2035)

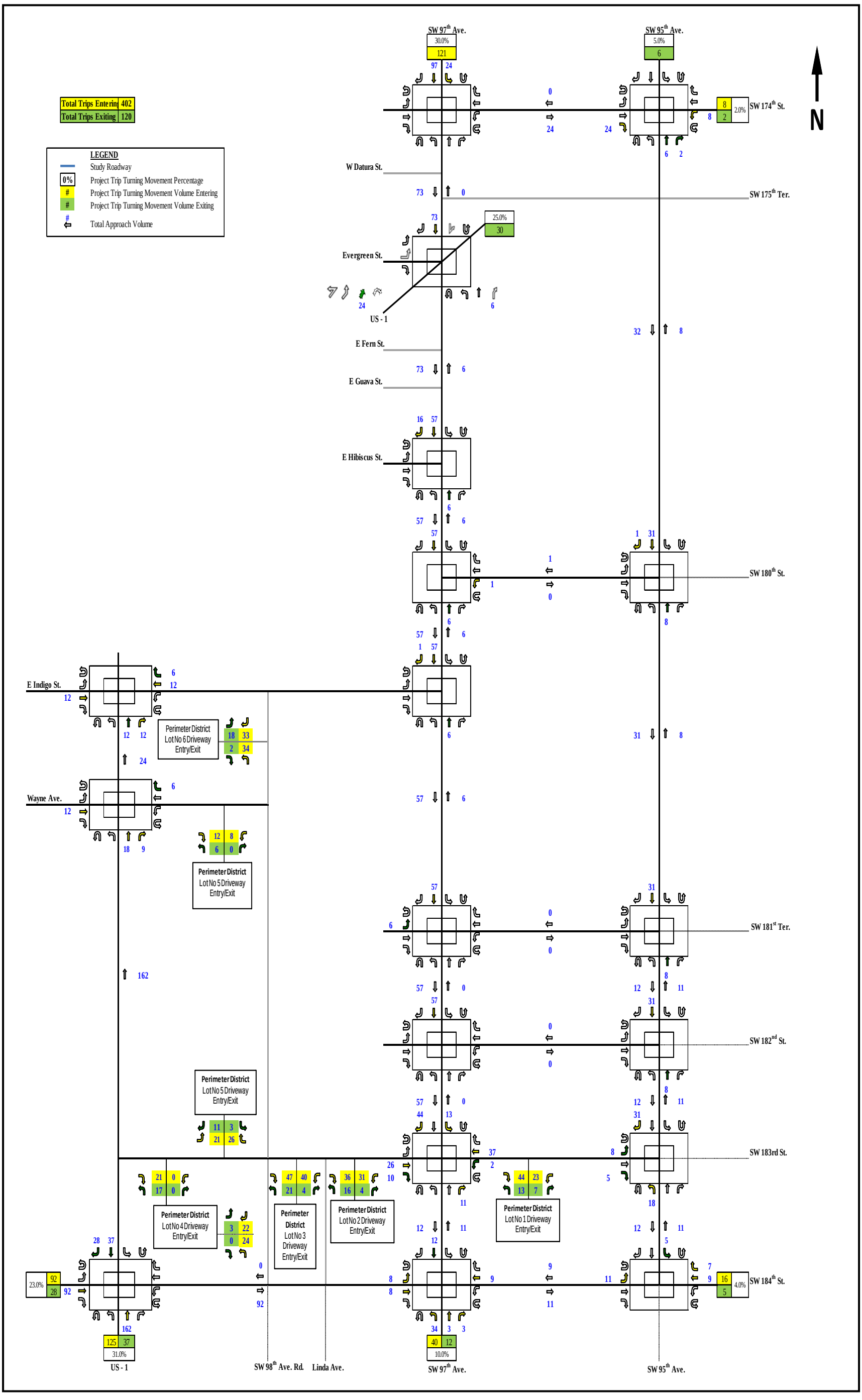

Figure 31 – AM Trip Distribution Perimeter District – Phase 3 (2045)

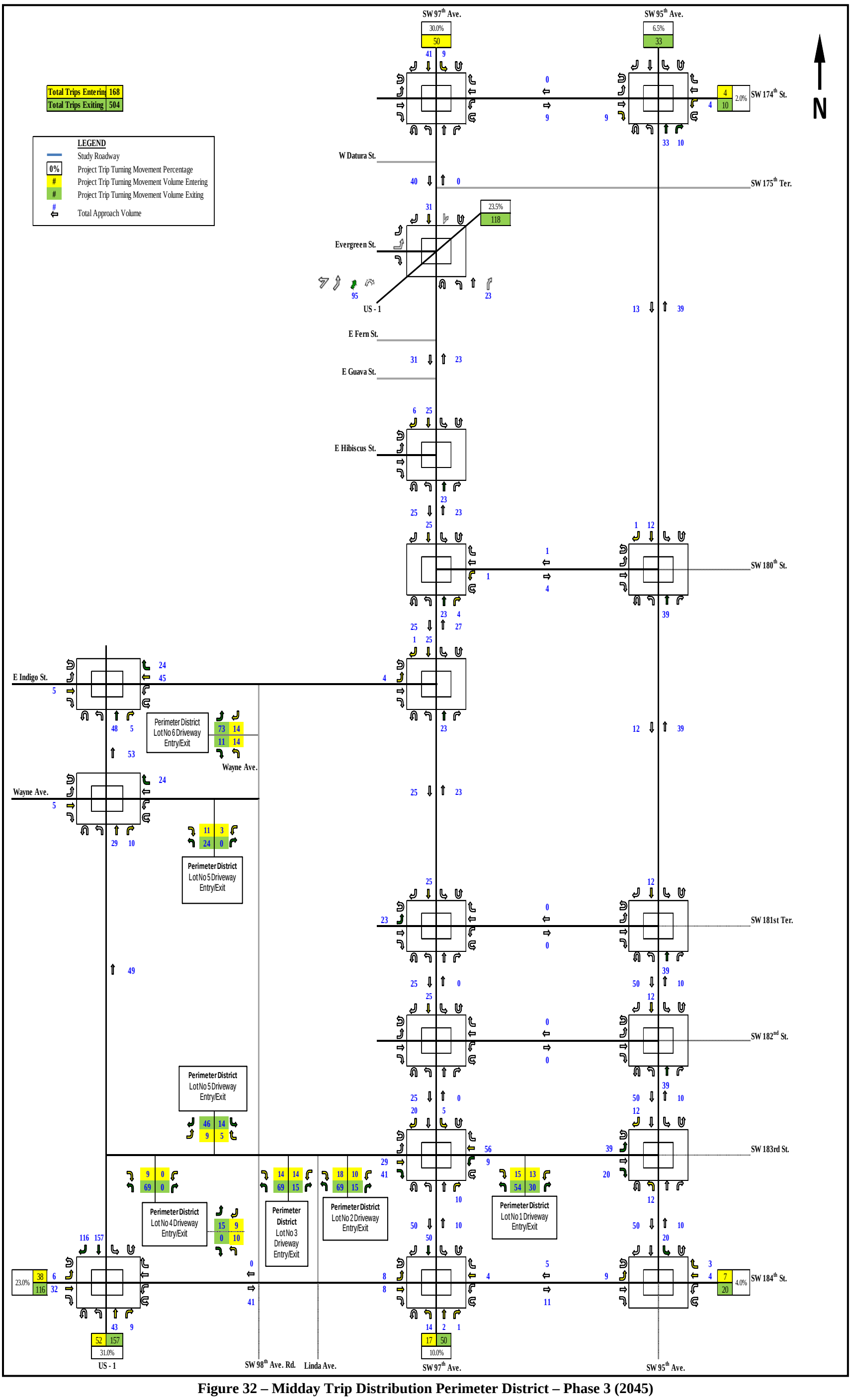

Figure 32 – Midday Trip Distribution Perimeter District – Phase 3 (2045)

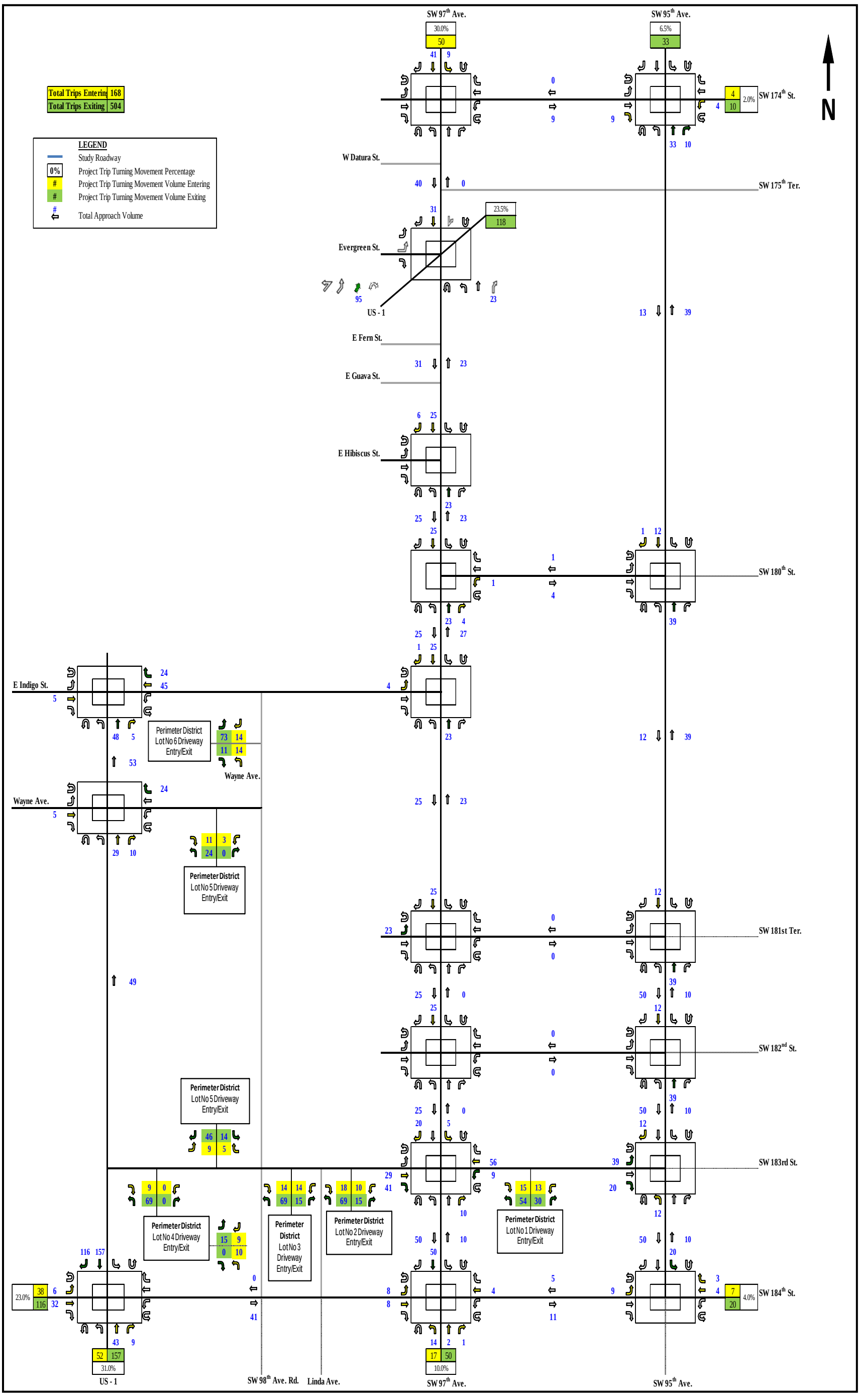

Figure 33 – PM Trip Distribution Perimeter District – Phase 3 (2045)

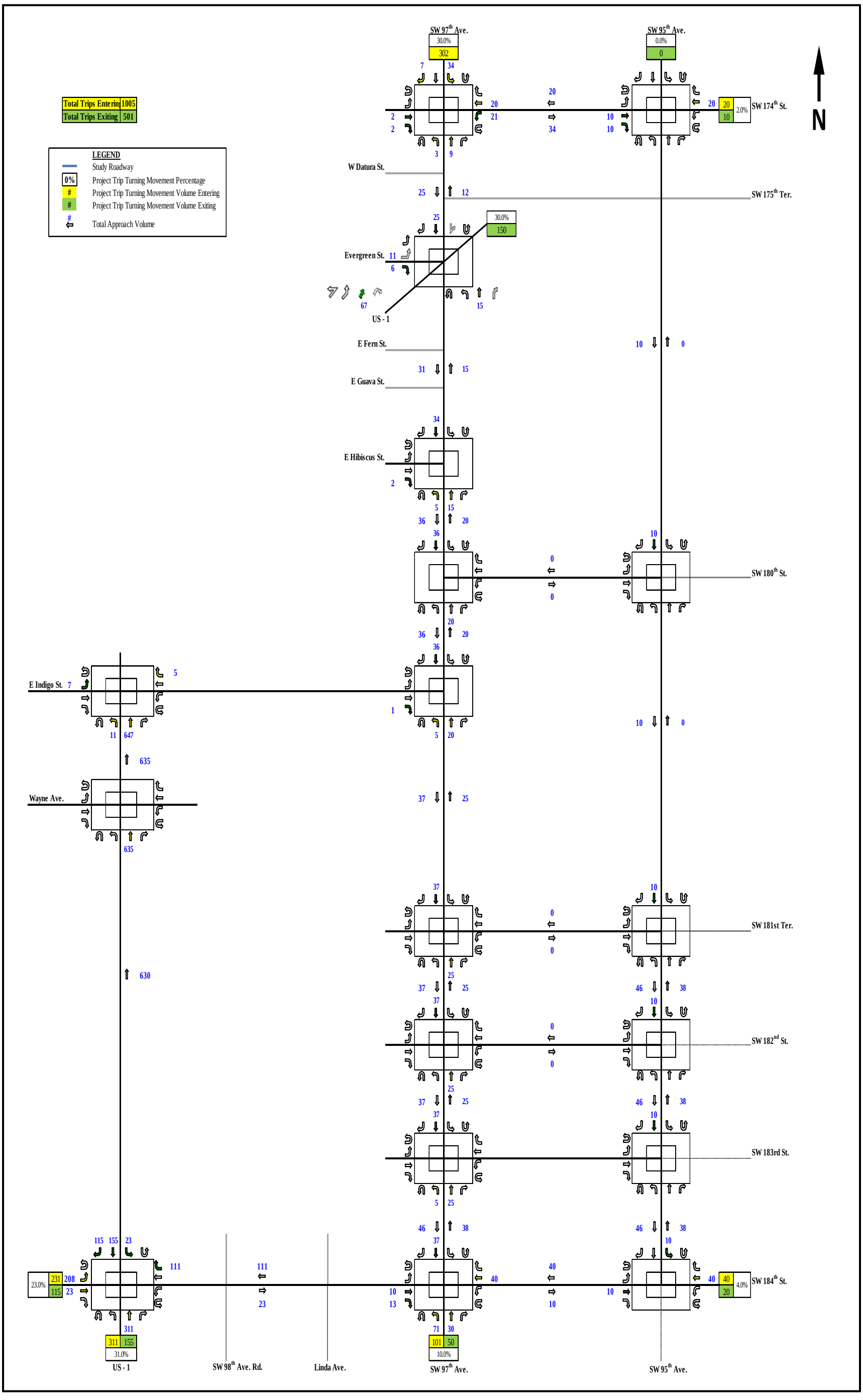

Figure 34 – AM Trip Distribution US 1 Island District – Phase 3 (2045)

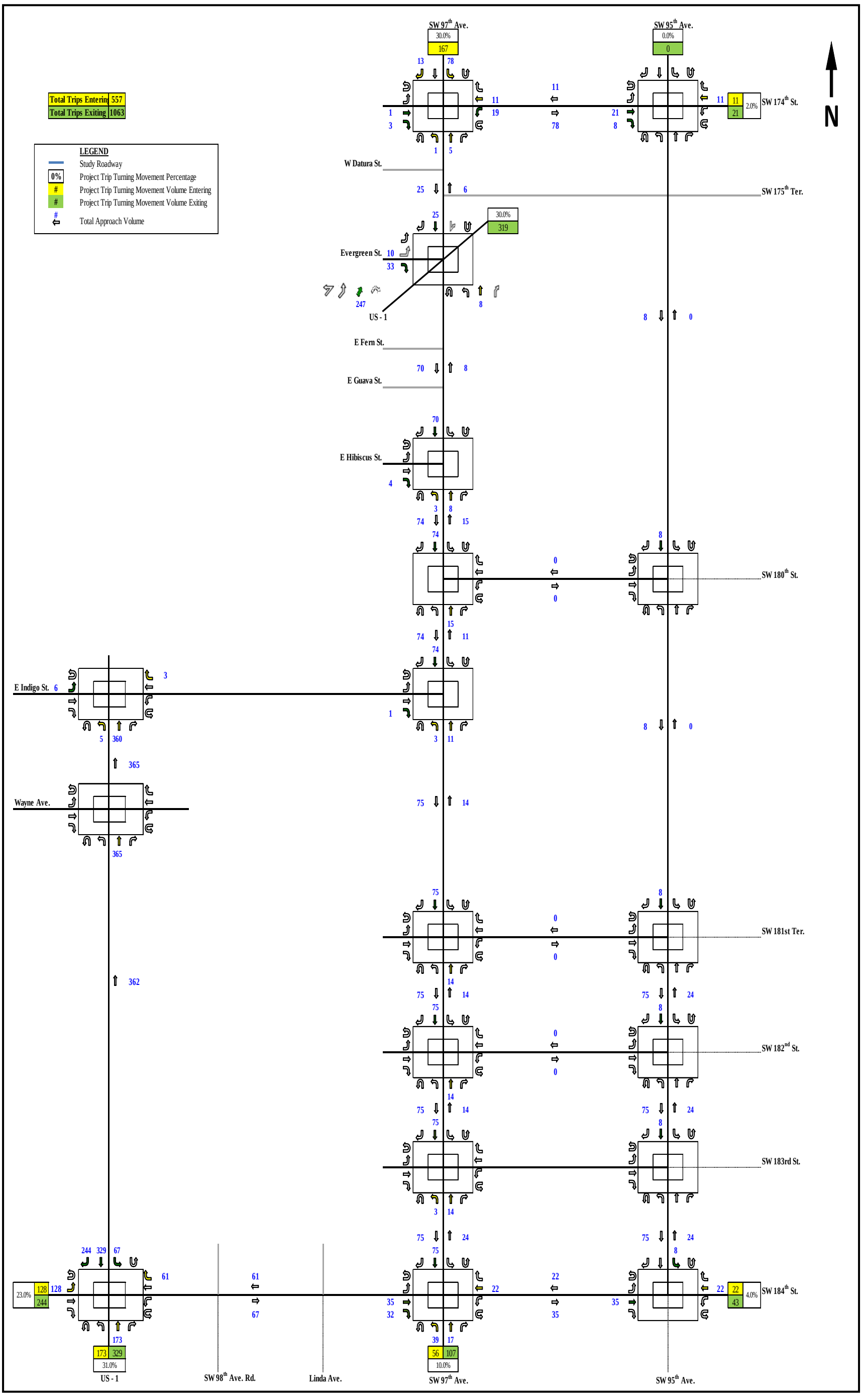

Figure 35 - Midday Trip Distribution US 1 Island District – Phase 3 (2045)

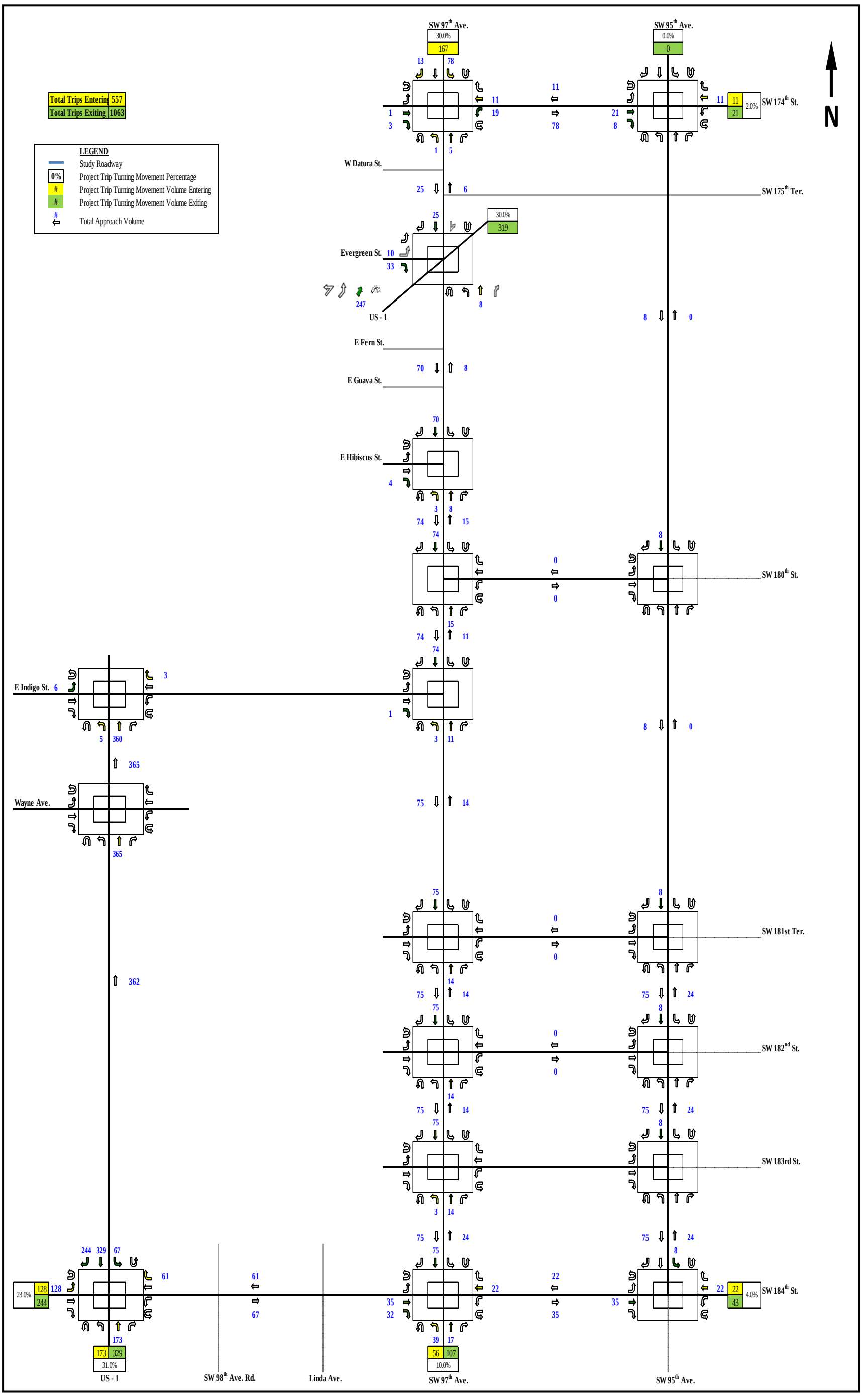

Figure 36 - PM Trip Distribution US 1 Island District – Phase 3 (2045)

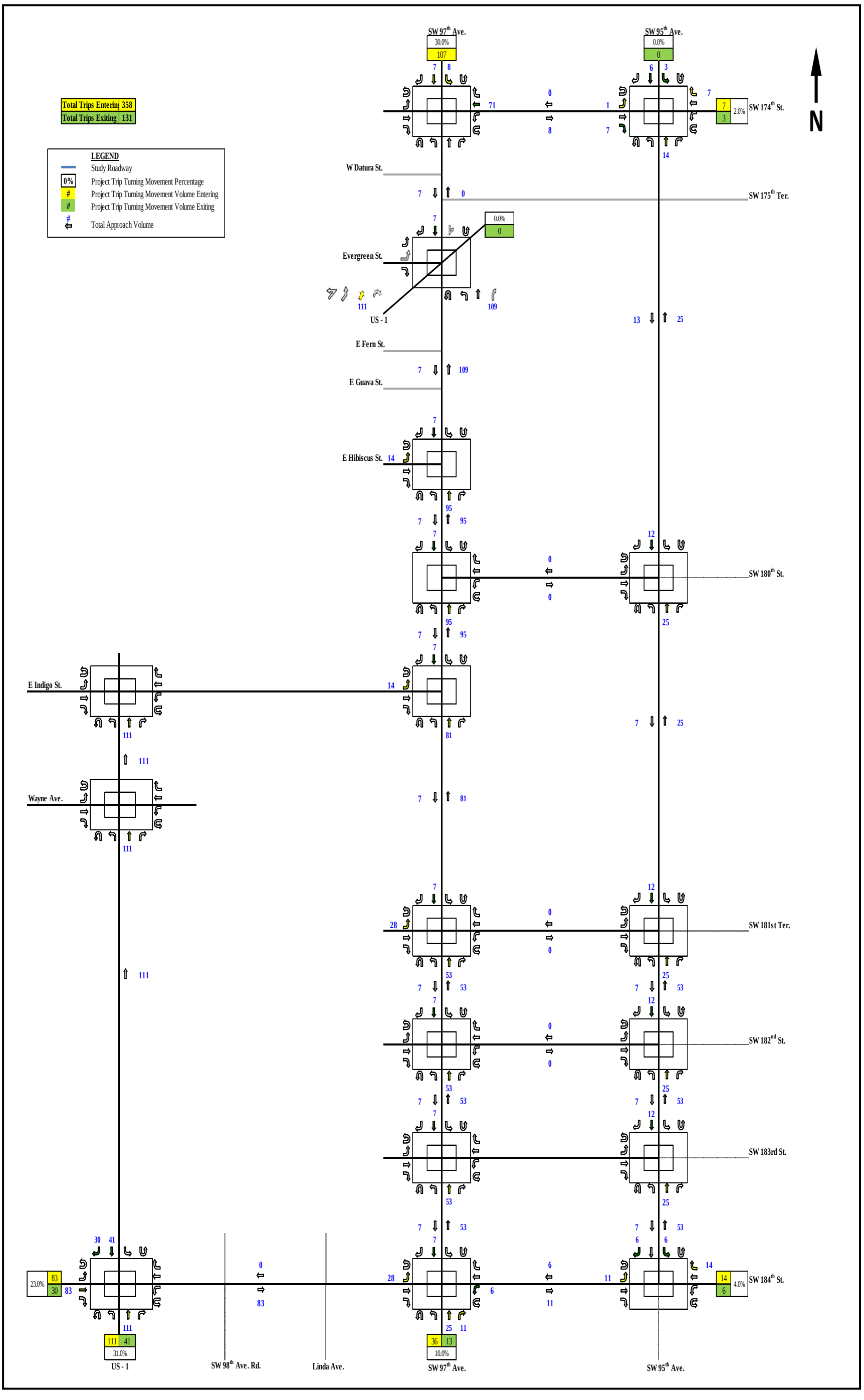

Figure 37 – AM Trip Distribution North Mixed District – Phase 3 (2045)

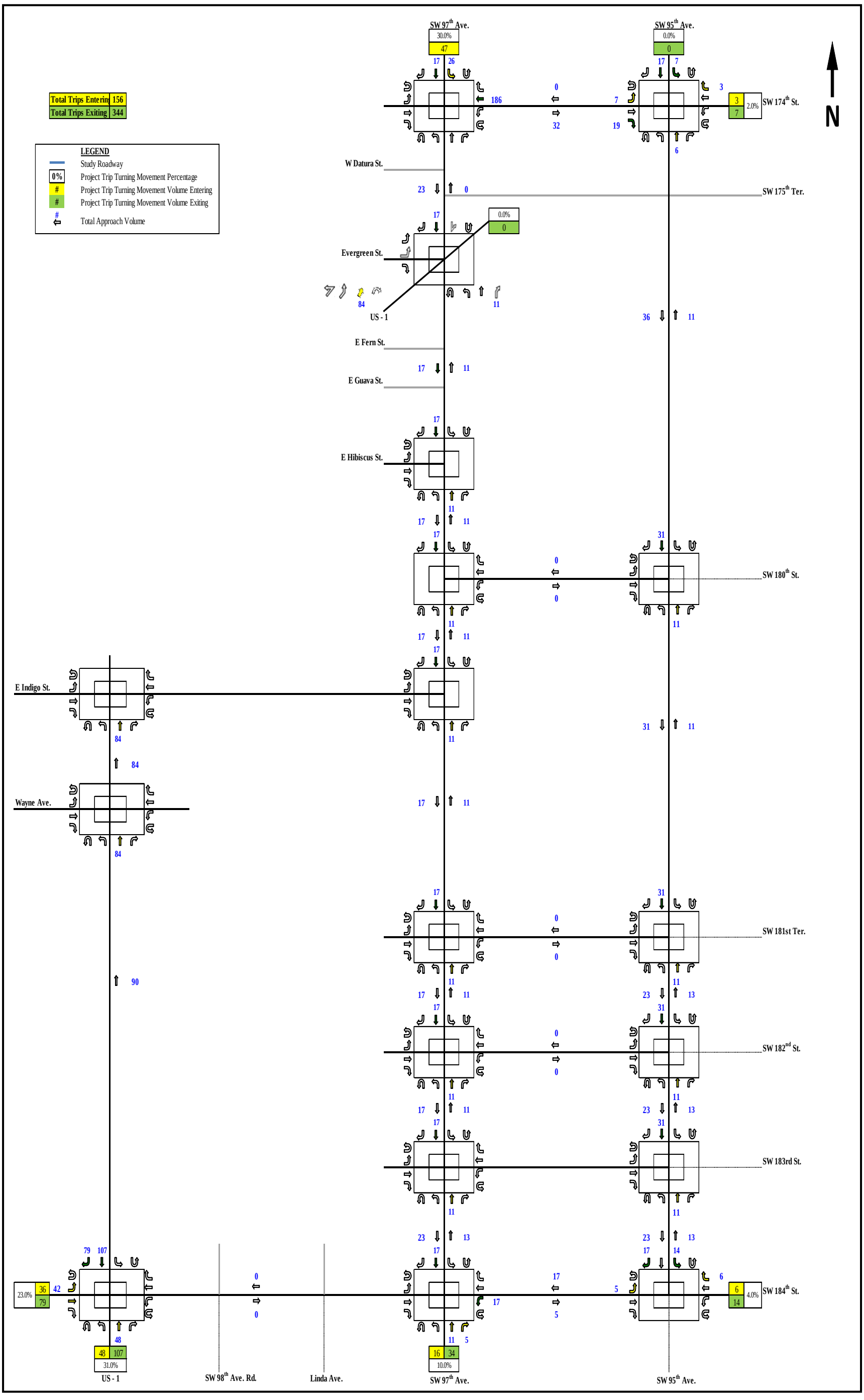

Figure 38 - Midday Trip Distribution North Mixed District – Phase 3 (2045)

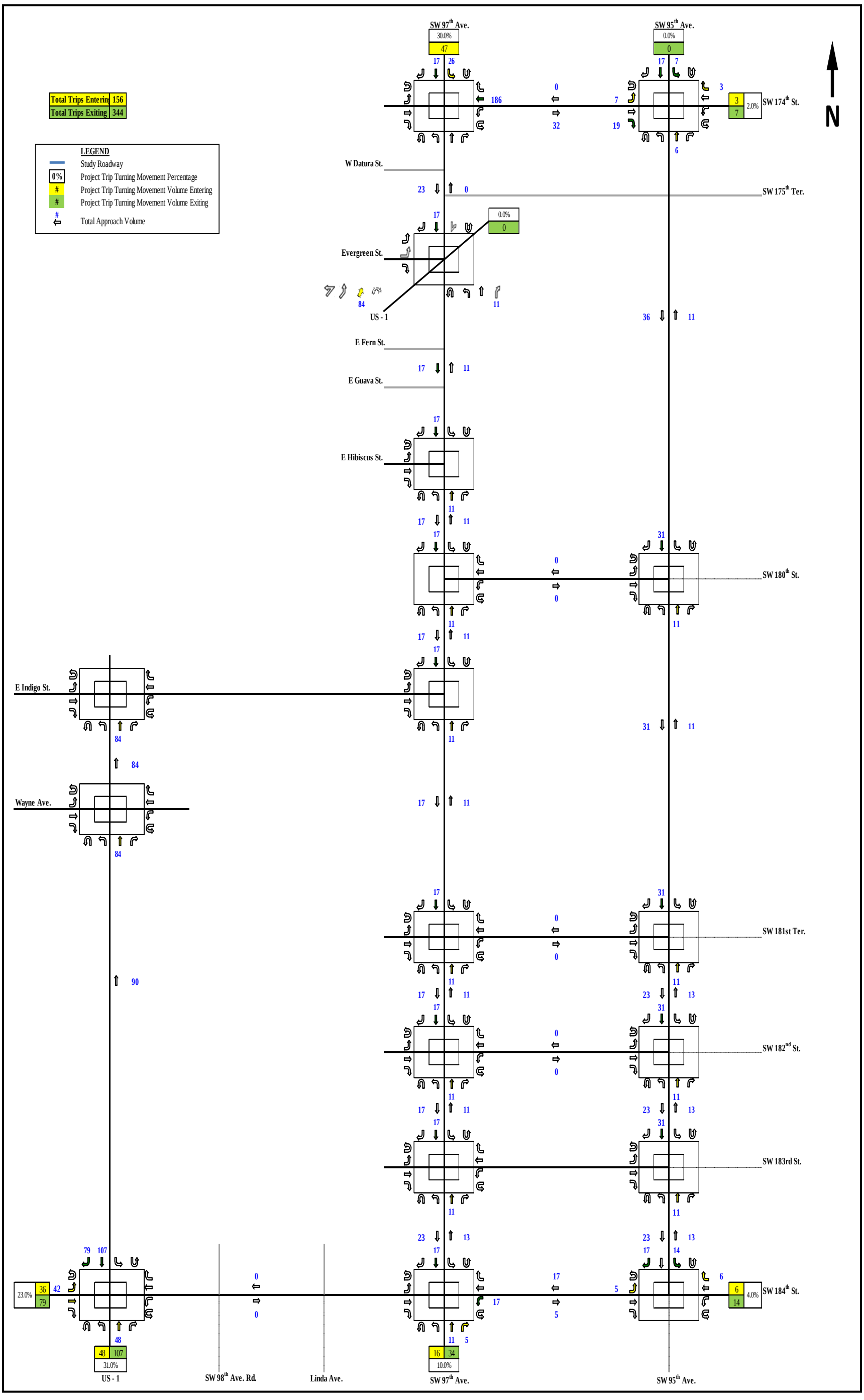

Figure 39 - PM Trip Distribution North Mixed District – Phase 3 (2045)

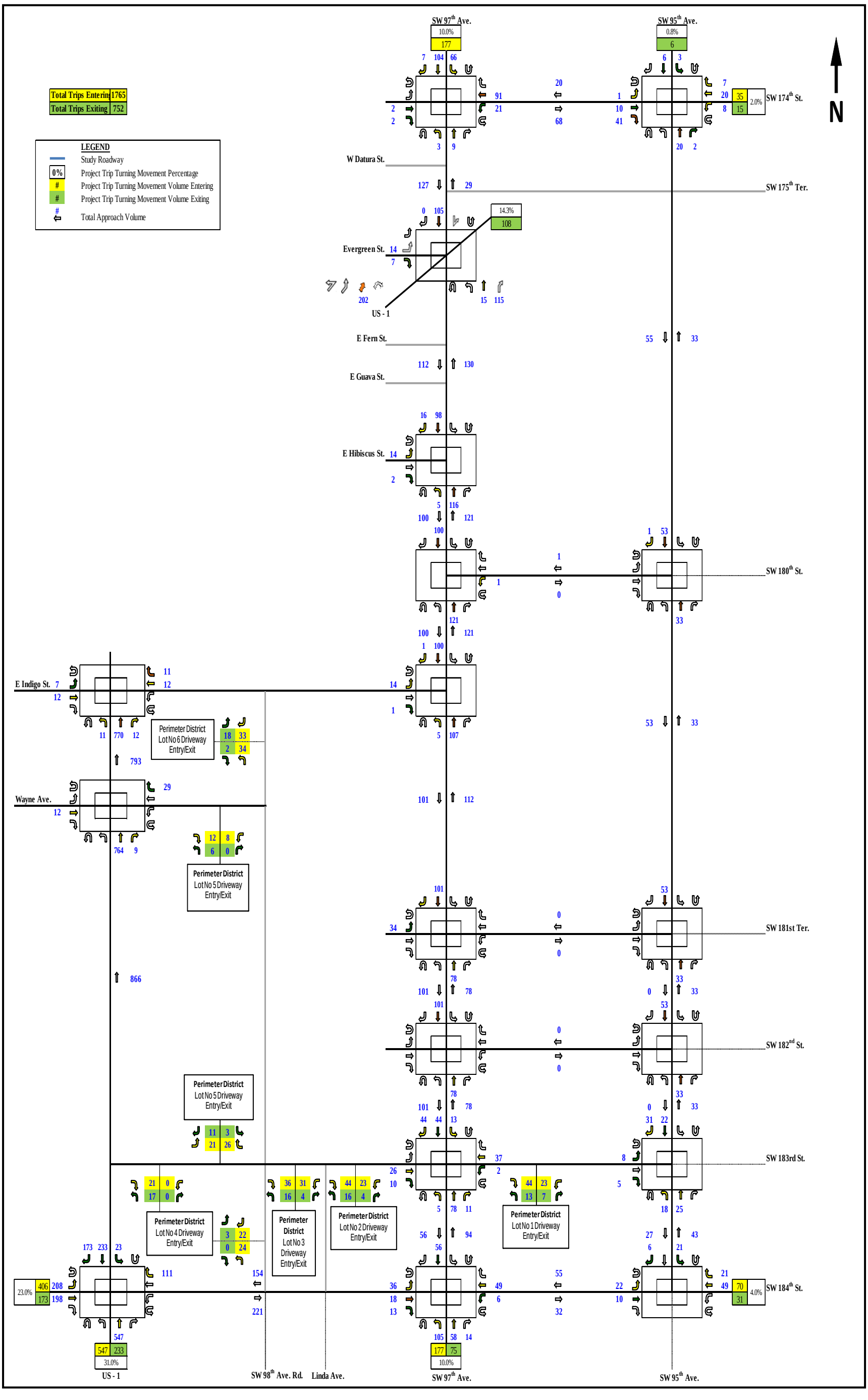

Figure 40 – AM Trip Distribution Total - Phase 3 (2045)

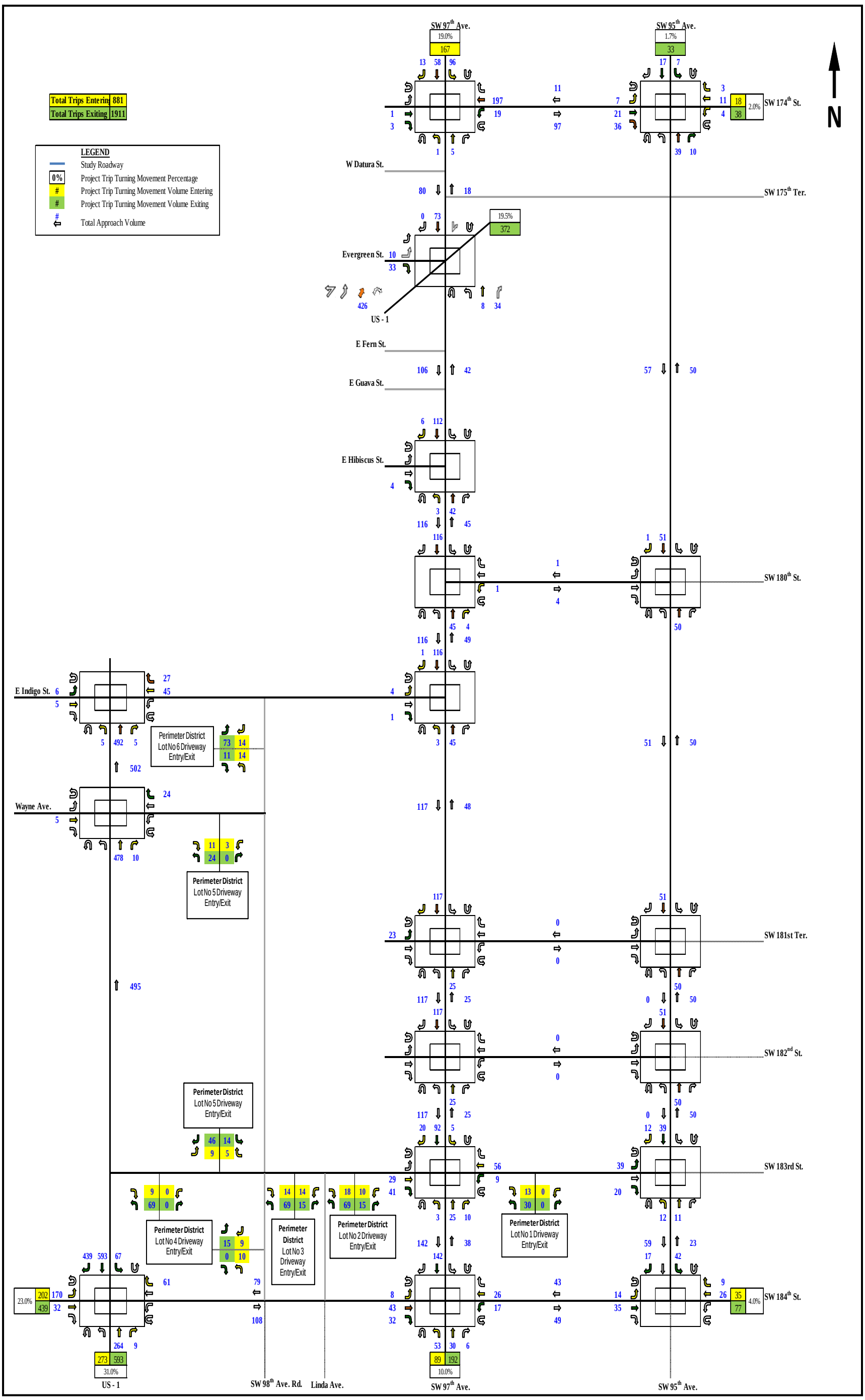

Figure 41 – Midday Trip Distribution Total - Phase 3 (2045)

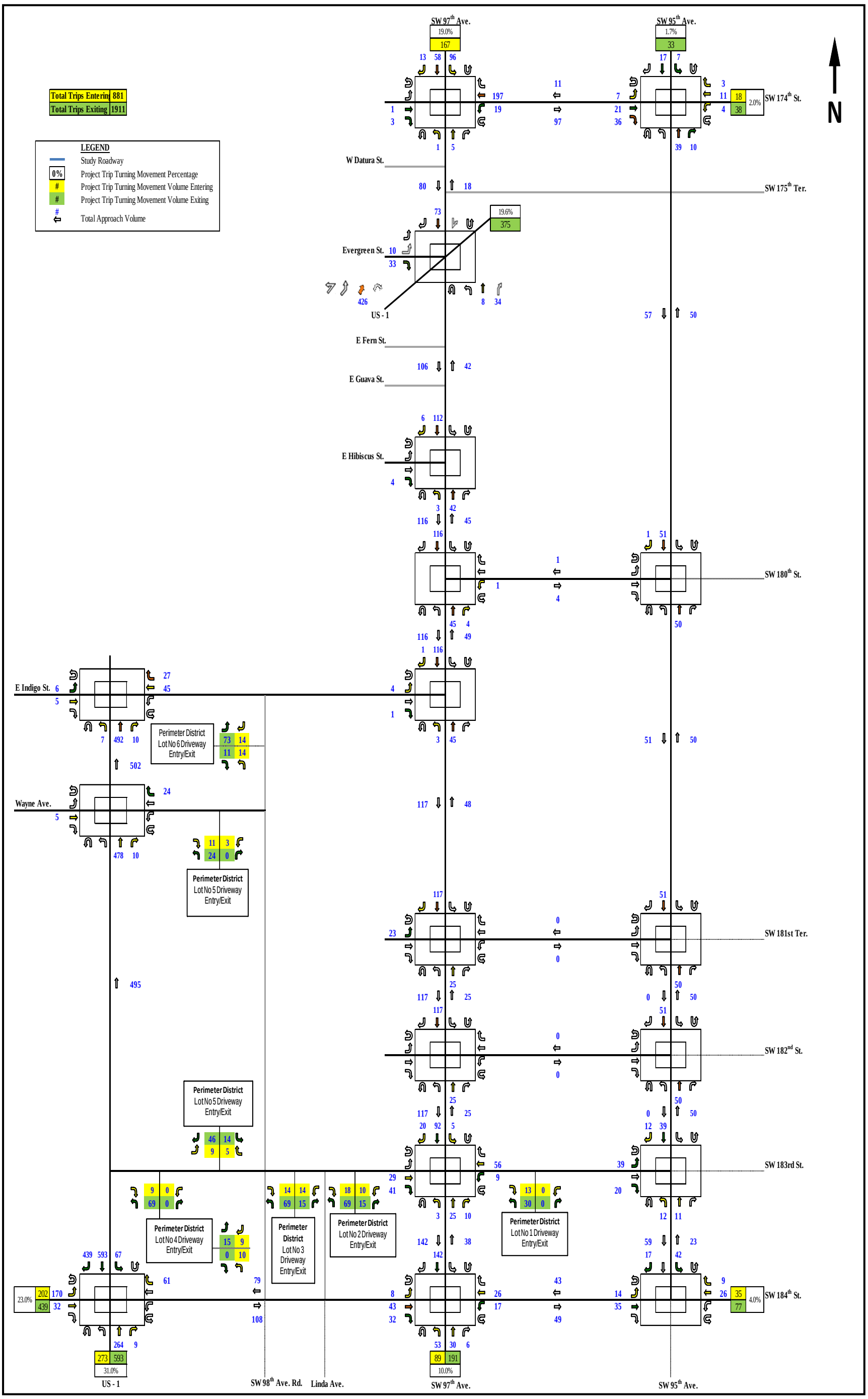

Figure 42 – PM Trip Distribution Total - Phase 3 (2045)

5. Future Total Traffic Analysis

Two separate future total conditions peak hour capacity analysis were performed for each of the analysis years and phase, for the following conditions.

- Peak Hour Transportation Corridor Segment Analysis
- Intersection level of service analysis

To perform this analysis, the project trips projections were added to the previously calculated balanced and evenly distributed future background conditions along both the SW 97th Avenue and SW 95th Avenue segments for each of the study analysis years.

Tables 20 through **22** present the results of the transportation corridor segment capacity analysis for the 2025, 2035 and 2045 during the A.M., midday and P.M. peak hour future total traffic conditions. As indicated in these tables, the corridors have sufficient capacity and are expected to operate above the adopted levels of service, with the exception of US-1 corridor that fails in year 2045 for the A.M peak period.

Table 23 presents the results of the intersection capacity analysis. The intersection splits were optimized to reflect the change in traffic patterns in future years. Each of the study intersections operate above the adopted level of service during all analysis periods, with the exception to US 1 at Evergreen Street, Wayne Avenue, Indigo Street and SW 184th Street and SW 184th Street at SW 97th Avenue.

As shown in **Table 23**, the intersection of SW 97th Avenue at US-1/ Evergreen Street operates below the adopted level of service during the A.M. peak period for the years of 2025 and 2035 and during both A.M. and P.M. peak periods for the year 2045. The US-1 at Wayne Avenue intersection operates below the adopted level of service during both the A.M. and P.M. peak periods for the year of 2025, and for each of the peak periods for the years of 2035 and 2045. The intersection of US-1 at E Indigo Street operates below the adopted level of service during each of the peak periods for the years of 2025, 2035 and 2045. The US-1 at SW 184 Street intersection operates below the adopted level of service during both the both the A.M. and P.M. peak period for the year of 2035 and for each of the peak periods for the year 2045. The SW 184th Street at SW 95th Avenue intersection operates below the adopted level of service during both the both the A.M. and P.M. peak period for the year of 2025 and during each of the peak periods for the years of 2035 and 2045. SW 184th Street at SW 97th Avenue operates below the adopted level of service during the P.M. peak period for the year of 2045.

Detailed information from the intersection capacity analysis is included in **Appendix J**.

To mitigate operational deficiencies, improvements were tested at the intersections that did not operate above the adopted level of service threshold, due to the addition of project trips. At a minimum, the objective of this procedure was to restore the LOS for the future total traffic intersection back to the future background conditions.

Table 20 – 2025 Future Total Peak Hour Transportation Corridor Segment Conditions

Principal Roadway		Peak Hour Roadway Volumes			Peak Hour Vehicular Capacity*	Peak Hour Excess Capacity			Peak Hour Level of Service					
		A.M.	MID.	P.M.		A.M.	MID.	P.M.	A.M.		MID.		P.M.	
									V/C	LOS	V/C	LOS	V/C	LOS
US-1	NEB	3289	2186	2276	3624	335	1438	1348	0.91	C	0.60	C	0.63	C
SW 97th Ave. / Franjo Rd.	NB	415	304	311	576	161	272	265	0.72	D	0.53	D	0.54	D
	SB	148	216	343	576	428	360	233	0.26	C	0.38	C	0.60	D
SW 95th Ave.	NB	330	256	316	576	246	320	260	0.57	D	0.44	D	0.55	D
	SB	102	132	257	576	474	444	319	0.18	C	0.23	C	0.45	C
SW 184th St.	EB	819	755	1092	1710	891	955	618	0.48	C	0.44	C	0.64	C
	WB	734	794	981	1710	976	916	729	0.43	C	0.46	C	0.57	C

(*) Peak hour capacity derived from FDOT's 2013 Quality/Level of Service Handbook

Table 21 – 2035 Future Total Peak Hour Transportation Corridor Segment Conditions

Principal Roadway		Peak Hour Roadway Volumes			Peak Hour Vehicular Capacity*	Peak Hour Excess Capacity			Peak Hour Level of Service					
		A.M.	MID.	P.M.		A.M.	MID.	P.M.	A.M.		MID.		P.M.	
									V/C	LOS	V/C	LOS	V/C	LOS
US-1	NEB	3448	2288	2391	3624	176	1336	1233	0.95	C	0.63	C	0.66	C
SW 97th Ave. / Franjo Rd.	NB	456	342	348	576	120	234	228	0.79	D	0.59	D	0.60	D
	SB	192	268	378	576	384	308	198	0.33	C	0.47	D	0.66	D
SW 95th Ave.	NB	358	273	341	576	218	303	235	0.62	D	0.47	D	0.59	D
	SB	106	139	271	576	470	437	305	0.18	C	0.24	C	0.47	D
SW 184th St.	EB	873	828	1183	1710	837	882	527	0.51	C	0.48	C	0.69	C
	WB	782	869	1031	1710	928	841	679	0.46	C	0.51	C	0.60	C

(*) Peak hour capacity derived from FDOT's 2013 Quality/Level of Service Handbook

Table 22 – 2045 Future Total Peak Hour Transportation Corridor Segment Conditions

Principal Roadway		Peak Hour Roadway Volumes			Peak Hour Vehicular Capacity*	Peak Hour Excess Capacity			Peak Hour Level of Service					
		A.M.	MID.	P.M.		A.M.	MID.	P.M.	A.M.		MID.		P.M.	
									V/C	LOS	V/C	LOS	V/C	LOS
US-1	NEB	3836	2913	2947	3624	-212	711	677	1.06	F	0.80	C	0.81	C
SW 97th Ave. / Franjo Rd.	NB	571	391	400	576	5	185	176	0.99	E	0.68	D	0.69	D
	SB	308	382	534	576	268	194	42	0.53	D	0.66	D	0.927	E
SW 95th Ave.	NB	418	329	377	576	158	247	199	0.73	D	0.57	D	0.65	D
	SB	147	204	344	576	429	372	232	0.26	C	0.35	C	0.60	D
SW 184th St.	EB	974	971	1345	1710	736	739	365	0.57	C	0.57	C	0.79	C
	WB	975	972	1130	1710	735	738	580	0.57	C	0.57	C	0.66	C

(*) Peak hour capacity derived from FDOT's 2013 Quality/Level of Service Handbook

Table 23 – A.M.-MID.-P.M. Future Total Intersection Conditions

Intersection	2025 Total Traffic						2035 Total Traffic						2045 Total Traffic					
	Peak Hour Overall Level of Service						Peak Hour Overall Level of Service						Peak Hour Overall Level of Service					
	LOS			Delay (secs.)			LOS			Delay (secs.)			LOS			Delay (secs.)		
	A.M.	MID.	P.M.	A.M	MID.	P.M.	A.M.	MID.	P.M.	A.M	MID.	P.M.	A.M.	MID.	P.M.	A.M	MID.	P.M.
SW 97th Avenue at SW 174th Street (Unsignalized)*	A	A	A	8.7	8.8	9.2	A	B	A	9.2	9.4	9.6	C	C	C	15.6	21.2	22.7
SW 97th Avenue at US-1 at Evergreen Street (Signalized)	F	C	D	83.1	30.0	39.9	F	D	D	111.6	35.0	44.3	F	D	E	205.3	50.3	68.4
SW 97th Avenue at Hibiscus Street (Unsignalized)*	B	B	B	11.2	11.1	11.2	B	B	B	12.1	12.0	12.1	D	B	C	32.3	14.0	14.2
SW 97th Avenue at SW 180th Street (Unsignalized)*	B	B	C	12.3	12.2	13.4	B	C	C	13.4	13.6	23.9	C	C	D	20.8	17.0	20.2
SW 97th Avenue at E Indigo Street (Unsignalized)*	B	B	B	10.5	10.3	10.8	B	B	B	11.0	10.8	11.3	B	B	B	14.2	13.0	13.4
SW 97th Avenue at SW 181st Terrace (Unsignalized)*	B	C	C	13.2	13.3	16.2	C	C	C	14.0	14.5	18.2	C	C	D	21.0	18.0	25.7
SW 97th Avenue at SW 182nd Street (Unsignalized)*	B	B	B	12.4	11.4	12.8	B	B	C	13.0	12.9	15.1	C	C	C	16.6	15.2	19.3
SW 97th Avenue at SW 183rd Street (Unsignalized)*	B	B	B	10.9	11.2	13.1	B	B	C	13.3	12.8	15.4	C	D	D	19.9	18.9	28.2
SW 97th Avenue at SW 184th Street (Signalized)	D	C	D	35.3	30.2	51.1	D	C	E	38.5	31.9	60.1	D	D	F	49.5	38.8	102.4
SW 184th Street and SW 95th Avenue (Unaignalized)*	F	E	F	312.9	38.3	779.3	F	F	F	588.7	61.2	Error	F	F	F	Error	579.1	Error
US-1 at SW 184th Street (Signalized)	E	E	E	78.1	59.5	70.7	F	E	F	87.7	73.6	85.3	F	F	F	249.3	210.9	202.2
US-1 at Wayne Avenue (Unsignalized)*	F	E	F	96.4	41.4	82.2	F	F	F	Error	241.2	180.0	F	F	F	Error	Error	Error
US-1 at E Indigo Street (Unsignalized)*	F	F	F	Error	Error	644.3	F	F	F	Error	Error	804.0	F	F	F	Error	Error	Error
SW 95th Avenue at SW 183rd Street (Unsignalized)*	B	A	B	11.1	9.7	10.9	B	B	B	11.5	9.8	11.1	B	B	C	11.7	12.2	13.8
SW 95th Avenue at SW 182nd Street (Unsignalized)*	B	B	B	11.0	10.7	12.2	B	B	B	11.5	10.9	13.7	B	B	C	12.6	11.9	13.6
SW 95th Avenue at SW 181st Terrace (Unsignalized)*	B	A	B	10.6	9.4	10.5	B	B	B	12.3	10.3	11.4	B	B	B	12.1	11.1	12.6
SW 95th Avenue at SW 180th Street (Unsignalized)*	B	B	B	10.3	9.9	10.7	B	B	B	10.5	10.0	10.9	B	B	B	11.4	11.0	12.2
SW 95th Avenue at SW 174th Street (Unsignalized)*	B	A	B	10.4	9.6	10.4	B	B	B	11.0	10.1	11.0	B	B	C	12.9	12.2	13.8

*Overall Intersection LOS not provided for two-way stop-controlled Intersections. The worst minor street movement is Indicated.

Taking the number of residential units and density of commercial property into consideration, it anticipated that Miami Dade County Signs and Signals Division will evaluate signal timings and coordination within this region. In addition, with the soon to be expected upgrades to the existing signal systems utilizing ITS technology such as adaptive signal control technology, transit signal priority, queue jumps and autonomous vehicles; both network and intersection cycle lengths and green splits were optimized for future total traffic conditions with the suggested improvement, as follows:

1. US-1 at SW 184th Street
    a. Add EB thru, left-turn and right-turn lane
    b. Add WB thru and right-turn lane
    c. Add NB right-turn lane
    d. Add SB dual right-turn lane
2. US-1 at Evergreen/97th Avenue
    a. Add EB dual right-turn lanes
    b. Add NB left-turn, thru lane and free-flow right-turn lane
    c. Add SB thru lane
3. US-1 at Indigo Street
    a. Install signal
4. US-1 at Wayne Street
    a. Install signal
5. SW 184th Street at SW 95th Avenue
    a. Install signal
6. SW 184th Street at SW 97th Avenue
    a. Add EB and WB thru lane

Tables **24** through **26** present the results of the transportation corridor segment capacity analysis for the 2025, 2035 and 2045 during the A.M., midday and P.M. peak hour future total traffic conditions. As indicated in these tables, analysis of the future total traffic conditions with improvement showed that each of the failing roadway segments within the study area will operate below acceptable levels of service regardless of the addition of project traffic, with exception to US-1.

Table **27** presents the results of the intersection capacity analysis. The intersection level of service analysis for future total traffic conditions with intersection improvements showed that each of the intersections performed at the same level of service as the future conditions without project traffic during the AM, midday and PM peak hour, with the exception of year 2045 where US-1 at SW 184th Street operates below the adopted level of service standards during the A.M. peak period.

It is recommended that the Village of Palmetto Bay coordinate with FDOT District Six and Miami Dade Public Works Division to further evaluate long term improvement concepts at the US-1 at SW 184th Street intersection.

Figures 43 through **51** summarize the future total traffic within the study area.

Detailed information from the intersection capacity analysis is included in **Appendix K**.

Table 24 – 2025 Future Total Peak Hour Transportation Corridor Segment Conditions

Principal Roadway		Peak Hour Roadway Volumes			Peak Hour Vehicular Capacity*	Peak Hour Excess Capacity			Peak Hour Level of Service					
		A.M.	MID.	P.M.		A.M.	MID.	P.M.	A.M.		MID.		P.M.	
									V/C	LOS	V/C	LOS	V/C	LOS
US-1	NEB	3289	2186	2276	3624	335	1438	1348	0.91	C	0.60	C	0.63	C
SW 97th Ave. / Franjo Rd.	NB	415	304	311	576	161	272	265	0.72	D	0.53	D	0.54	D
	SB	148	216	343	576	428	360	233	0.26	C	0.38	C	0.60	D
SW 95th Ave.	NB	330	256	316	576	246	320	260	0.57	D	0.44	D	0.55	D
	SB	102	132	257	576	474	444	319	0.18	C	0.23	C	0.45	C
SW 184th St.	EB	819	755	1092	1710	891	955	618	0.48	C	0.44	C	0.64	C
	WB	734	794	981	1710	976	916	729	0.43	C	0.46	C	0.57	C

(*) Peak hour capacity derived from FDOT's 2013 Quality/Level of Service Handbook

Table 25 – 2035 Future Total Peak Hour Transportation Corridor Segment Conditions

Principal Roadway		Peak Hour Roadway Volumes			Peak Hour Vehicular Capacity*	Peak Hour Excess Capacity			Peak Hour Level of Service					
		A.M.	MID.	P.M.		A.M.	MID.	P.M.	A.M.		MID.		P.M.	
									V/C	LOS	V/C	LOS	V/C	LOS
US-1	NEB	3448	2288	2391	3624	176	1336	1233	0.95	C	0.63	C	0.66	C
SW 97th Ave. / Franjo Rd.	NB	456	342	348	576	120	234	228	0.79	D	0.59	D	0.60	D
	SB	192	268	378	576	384	308	198	0.33	C	0.47	D	0.66	D
SW 95th Ave.	NB	358	273	341	576	218	303	235	0.62	D	0.47	D	0.59	D
	SB	106	139	271	576	470	437	305	0.18	C	0.24	C	0.47	D
SW 184th St.	EB	873	828	1183	1710	837	882	527	0.51	C	0.48	C	0.69	C
	WB	782	869	1031	1710	928	841	679	0.46	C	0.51	C	0.60	C

(*) Peak hour capacity derived from FDOT's 2013 Quality/Level of Service Handbook

Table 26 – 2045 Future Total Peak Hour Transportation Corridor Segment Conditions

Principal Roadway		Peak Hour Roadway Volumes			Peak Hour Vehicular Capacity*	Peak Hour Excess Capacity			Peak Hour Level of Service					
		A.M.	MID.	P.M.		A.M.	MID.	P.M.	A.M.		MID.		P.M.	
									V/C	LOS	V/C	LOS	V/C	LOS
US-1	NEB	3836	2913	2947	3624	-212	711	677	1.06	F	0.80	C	0.81	C
SW 97th Ave. / Franjo Rd.	NB	571	391	400	576	5	185	176	0.99	E	0.68	D	0.69	D
	SB	308	382	534	576	268	194	42	0.53	D	0.66	D	0.927	E
SW 95th Ave.	NB	418	329	377	576	158	247	199	0.73	D	0.57	D	0.65	D
	SB	147	204	344	576	429	372	232	0.26	C	0.35	C	0.60	D
SW 184th St.	EB	974	971	1345	1710	736	739	365	0.57	C	0.57	C	0.79	C
	WB	975	972	1130	1710	735	738	580	0.57	C	0.57	C	0.66	C

(*) Peak hour capacity derived from FDOT's 2013 Quality/Level of Service Handbook

Table 27 – A.M.-MID.-P.M. Future Total Intersection Conditions

Intersection	2025 Total Traffic						2035 Total Traffic						2045 Total Traffic					
	Peak Hour Overall Level of Service						Peak Hour Overall Level of Service						Peak Hour Overall Level of Service					
	LOS			Delay (secs.)			LOS			Delay (secs.)			LOS			Delay (secs.)		
	A.M.	MID.	P.M.	A.M	MID.	P.M.	A.M.	MID.	P.M.	A.M	MID.	P.M.	A.M.	MID.	P.M.	A.M	MID.	P.M.
SW 97th Avenue at SW 174th Street (Unsignalized)*	A	A	A	8.7	8.8	9.2	A	B	A	9.2	9.4	9.6	C	C	C	15.6	21.2	22.7
SW 97th Avenue at US-1 at Evergreen Street (Signalized)	C	B	B	23.8	17.4	18.4	C	B	C	30.1	19.7	20.7	E	C	C	67.4	26.5	28.7
SW 97th Avenue at Hibiscus Street (Unsignalized)*	B	B	B	11.2	11.1	11.2	B	B	B	12.0	11.9	11.9	D	B	C	32.4	13.9	14.1
SW 97th Avenue at SW 180th Street (Unsignalized)*	B	B	C	12.3	12.2	13.4	B	C	C	13.4	13.6	23.9	C	C	D	20.8	17.0	20.2
SW 97th Avenue at E Indigo Street (Unsignalized)*	B	B	B	10.5	10.3	10.8	B	B	B	11.0	10.8	11.3	B	B	B	14.2	13.0	13.4
SW 97th Avenue at SW 181st Terrace (Unsignalized)*	B	C	C	13.1	13.3	16.2	C	C	C	14.0	14.5	18.2	C	C	D	20.8	18.0	25.7
SW 97th Avenue at SW 182nd Street (Unsignalized)*	B	B	B	12.4	11.4	12.8	B	B	C	13.0	12.9	15.1	C	C	C	16.4	15.1	19.2
SW 97th Avenue at SW 183rd Street (Unsignalized)*	B	B	B	10.9	11.1	13.1	B	B	C	13.3	12.7	15.3	C	D	D	19.8	18.9	28.2
SW 97th Avenue at SW 184th Street (Signalized)	D	C	D	37.4	30.3	46.0	D	C	D	40.7	32.1	48.6	D	D	E	50.3	38.5	63.2
SW 184th Street and SW 95th Avenue (Signalized)	B	C	C	18.0	33.0	27.2	B	C	C	17.7	32.0	26.9	C	D	C	29.9	35.3	31.8
US-1 at SW 184th Street (Signalized)	D	C	C	37.8	30.7	33.0	D	D	D	41.8	35.8	42.9	F	E	E	89.6	58.8	67.4
US-1 at Wayne Avenue (Signalized)	A	A	A	3.3	4.9	5.9	A	A	A	4.6	6.0	7.4	A	A	A	9.1	9.1	9.4
US-1 at E Indigo Street (Signalized)	A	A	A	8.2	7.5	6.7	A	A	A	9.1	7.8	6.9	D	C	B	51.9	21.9	15.8
SW 95th Avenue at SW 183rd Street (Unsignalized)*	B	A	B	11.1	9.7	10.9	B	B	B	11.5	9.8	11.1	B	B	C	11.7	12.2	13.8
SW 95th Avenue at SW 182nd Street (Unsignalized)*	B	B	B	11.0	10.7	12.2	B	B	B	11.5	10.9	13.7	B	B	C	12.6	11.9	13.6
SW 95th Avenue at SW 181st Terrace (Unsignalized)*	B	A	B	10.6	9.4	10.5	B	B	B	12.3	10.3	11.4	B	B	B	12.1	11.1	12.6
SW 95th Avenue at SW 180th Street (Unsignalized)*	B	B	B	10.3	9.9	10.7	B	B	B	10.5	10.0	10.9	B	B	B	11.4	11.0	12.2
SW 95th Avenue at SW 174th Street (Unsignalized)*	B	A	B	10.4	9.6	10.4	B	B	B	11.0	10.1	11.0	B	B	C	12.9	12.2	13.8

*Overall Intersection LOS not provided for two-way stop-controlled Intersections. The worst minor street movement is Indicated.

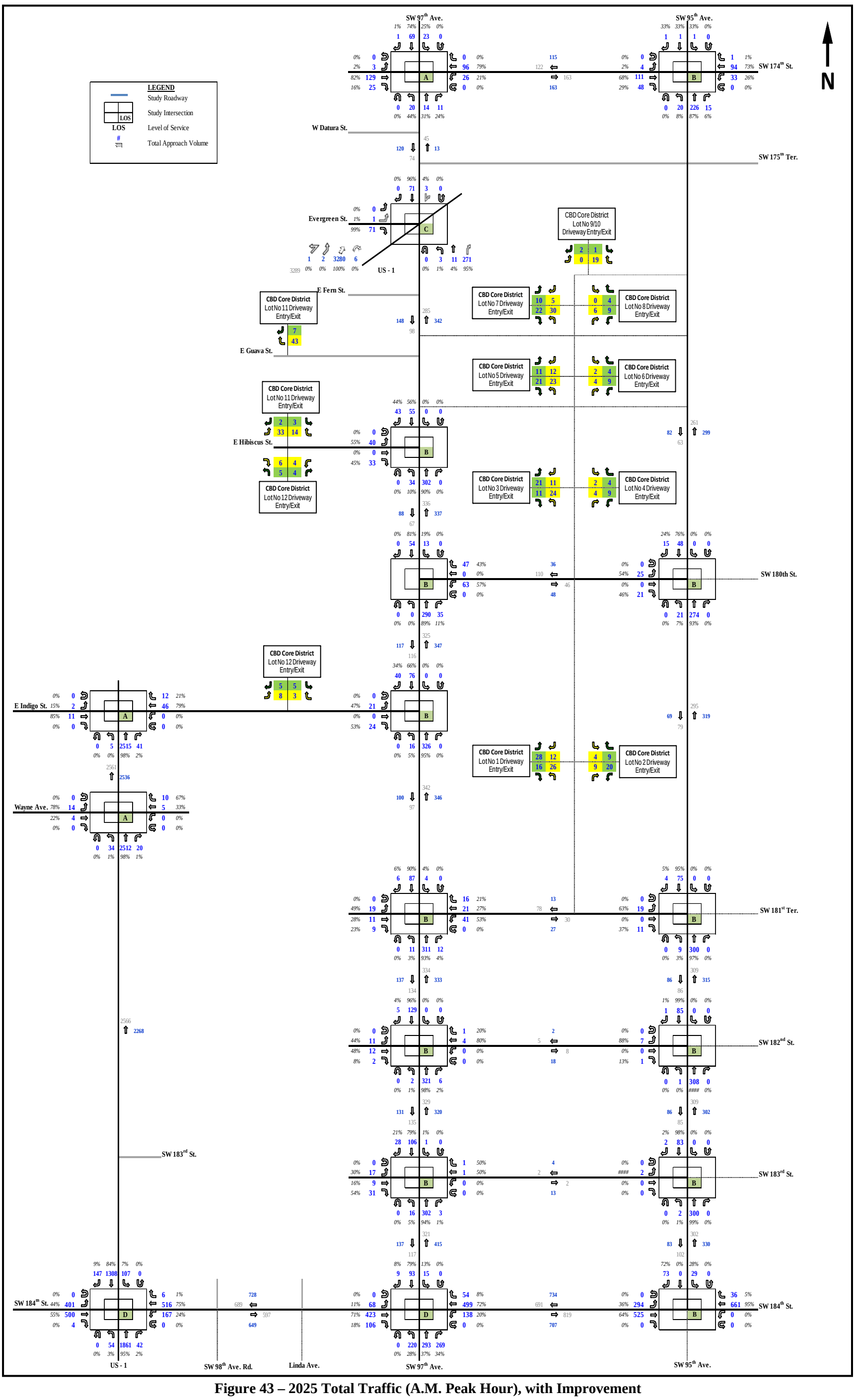

Figure 43 – 2025 Total Traffic (A.M. Peak Hour), with Improvement

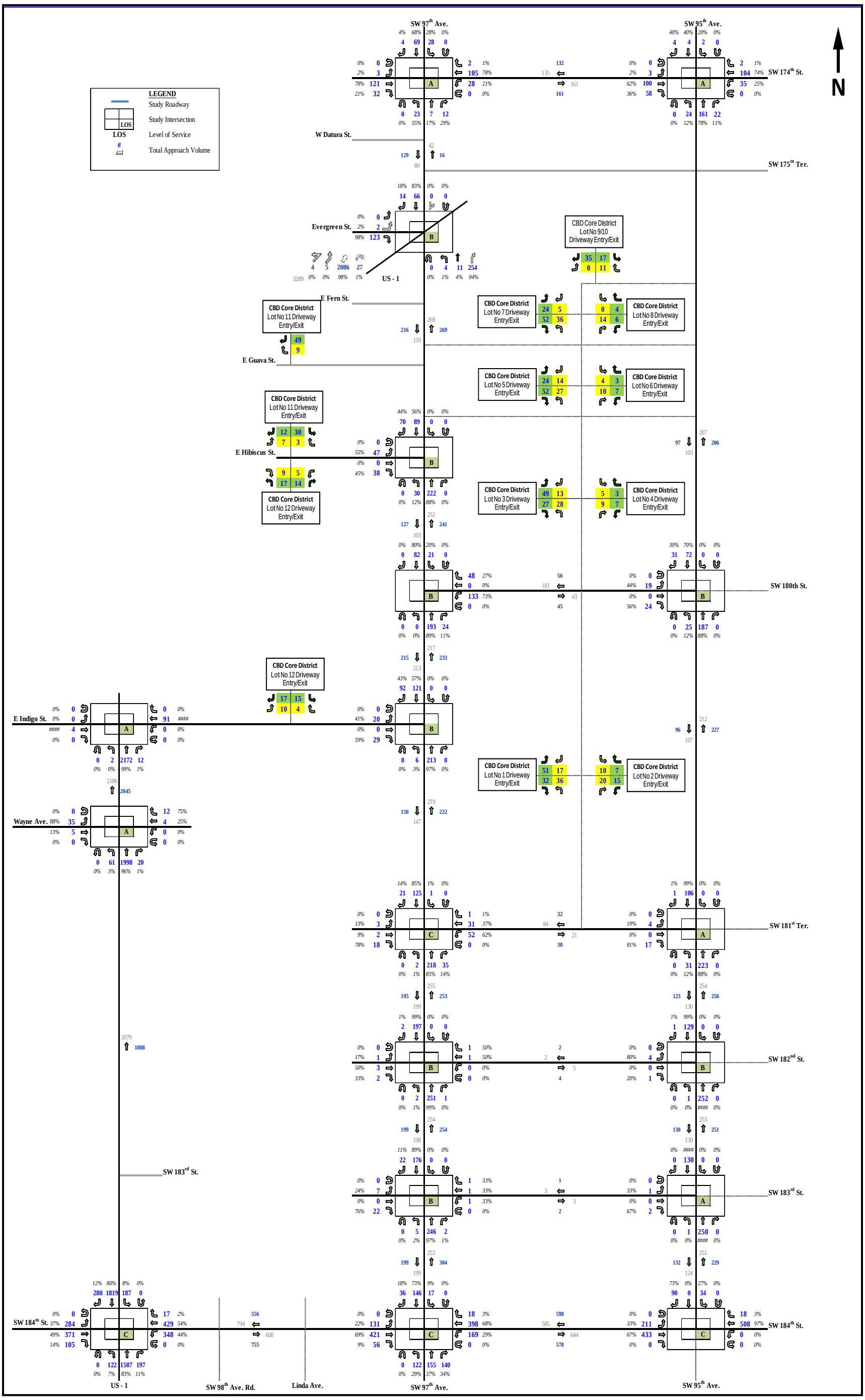

Figure 44 – 2025 Total Traffic (MID. Peak Hour), with Improvement

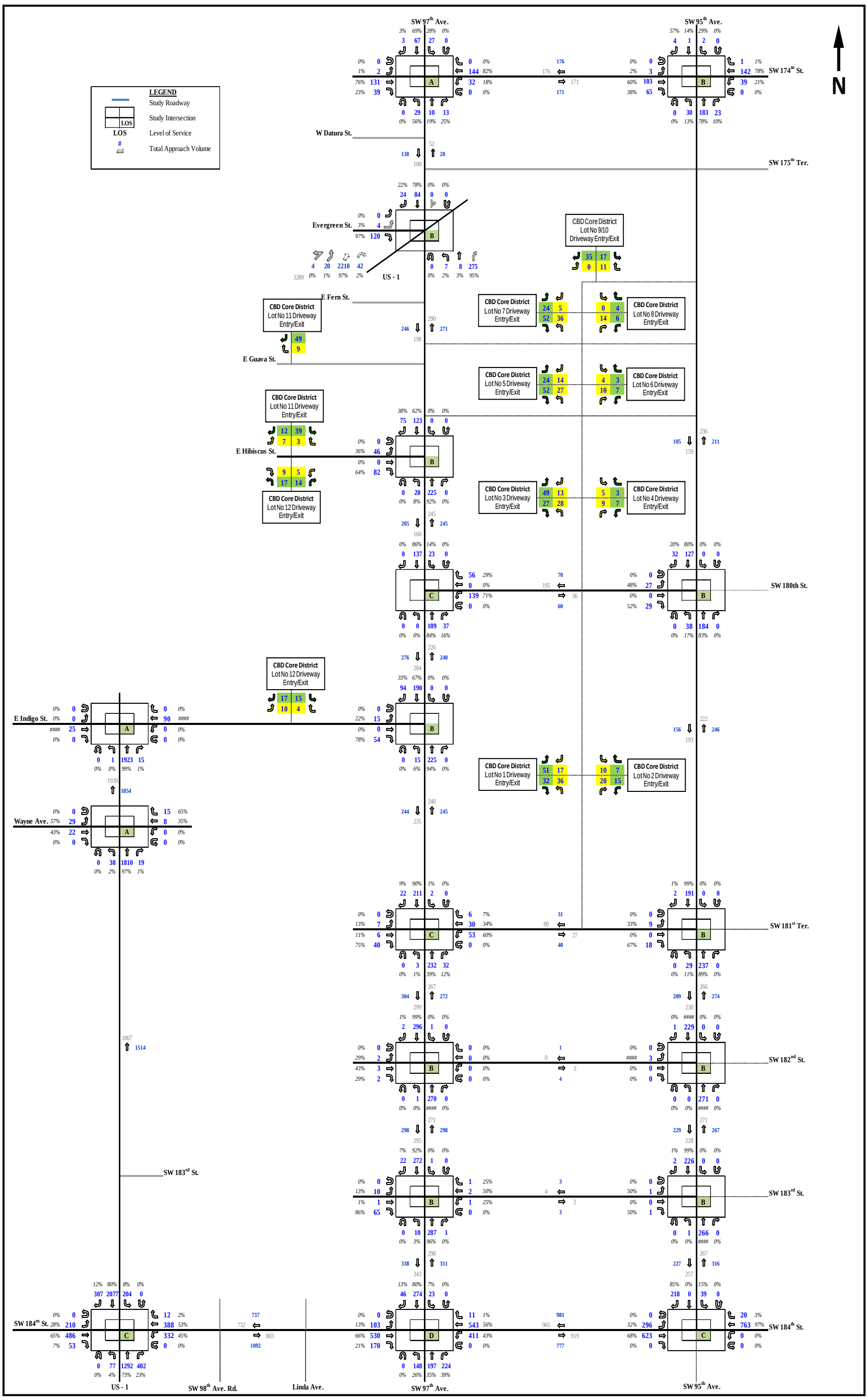

Figure 45 – 2025 Total Traffic (P.M. Peak Hour), with Improvement

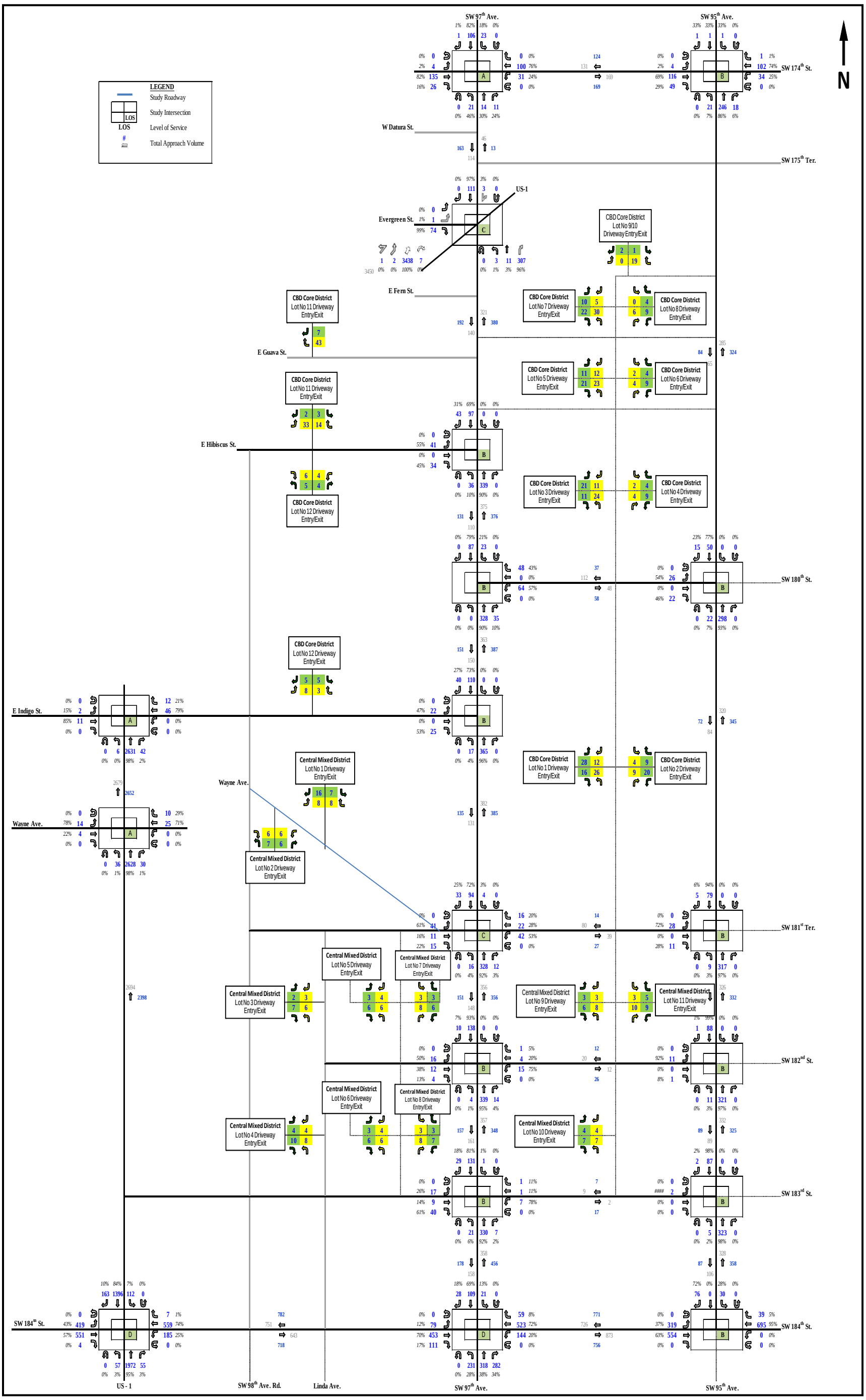

Figure 46 – Total Traffic 2035 (A.M. Peak Hour), with Improvement

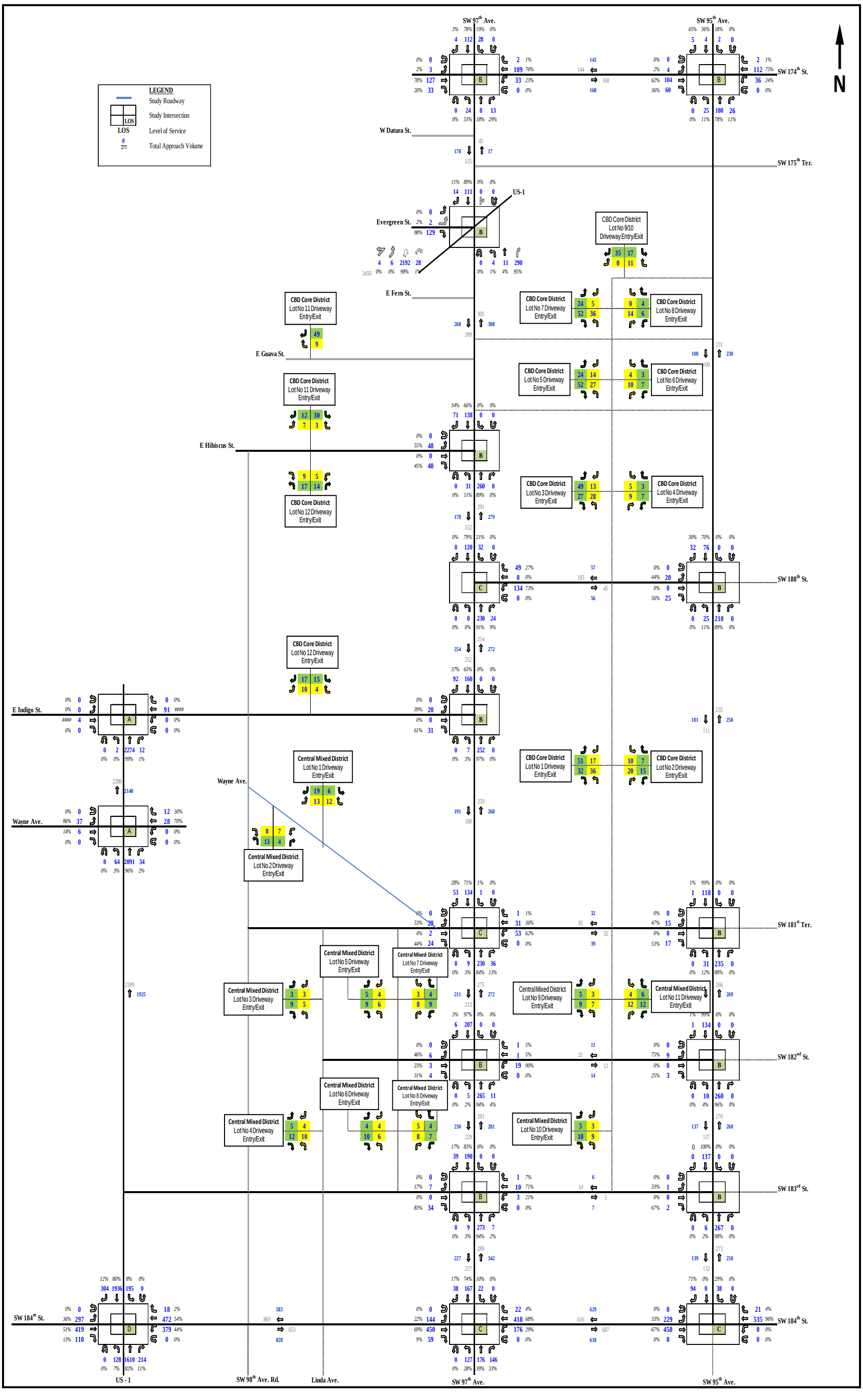

Figure 47 – Total Traffic 2035 (MID. Peak Hour), with Improvement

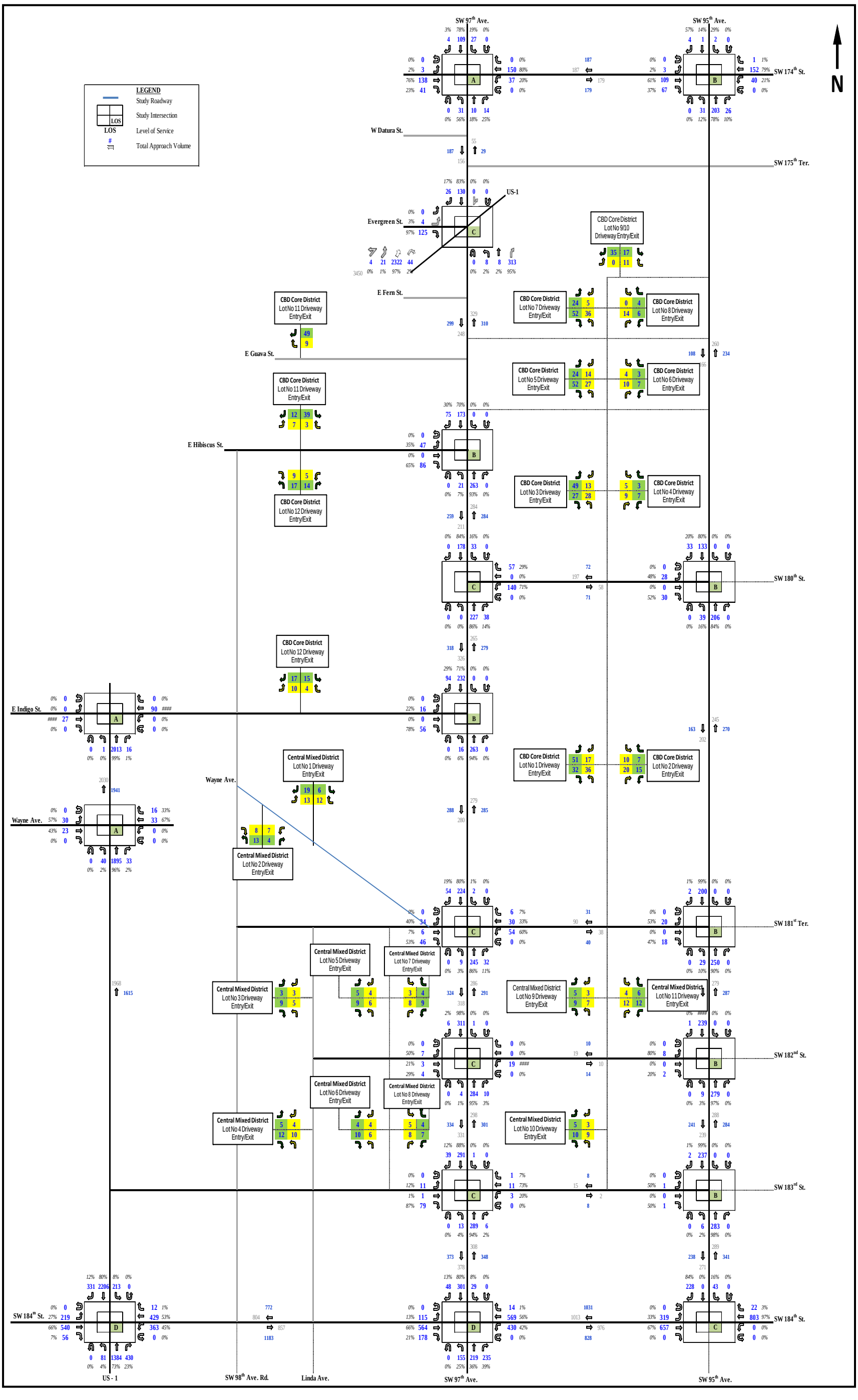

Figure 48 – Total Traffic 2035 (P.M. Peak Hour), with Improvement

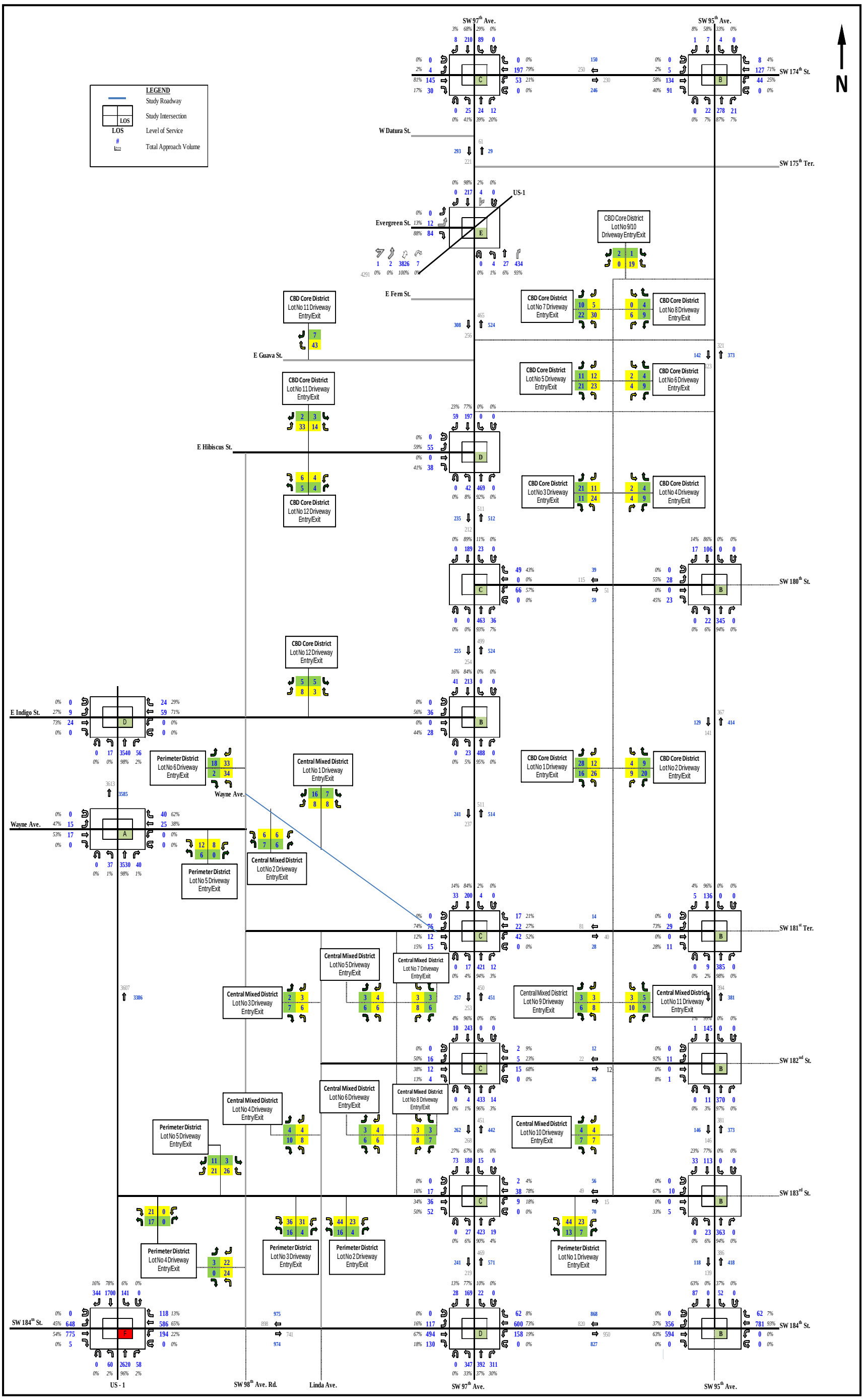

Figure 49 – Total Traffic 2045 (A.M. Peak Hour), with Improvement

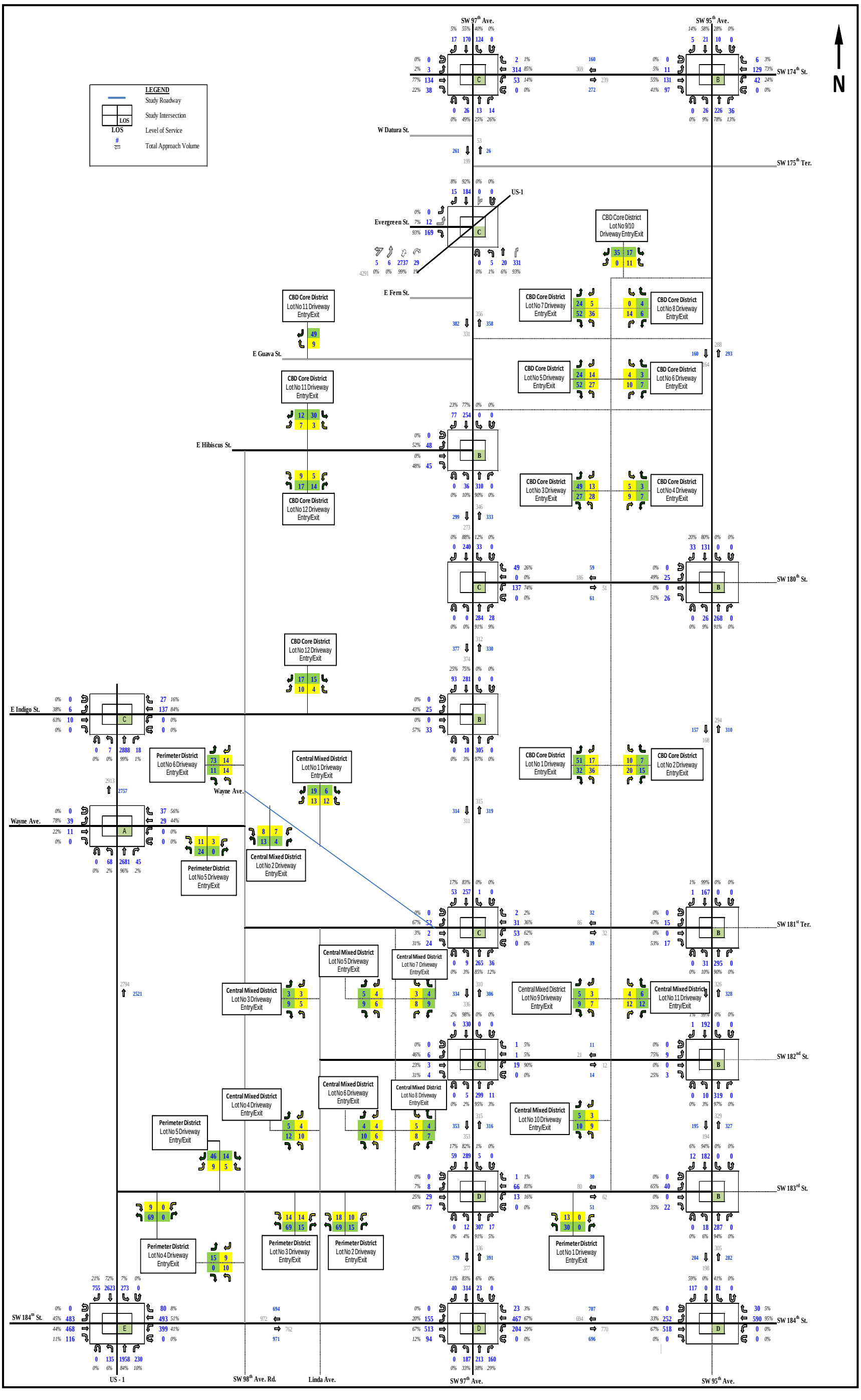

Figure 50 – Total Traffic 2045 (MID. Peak Hour), with Improvement

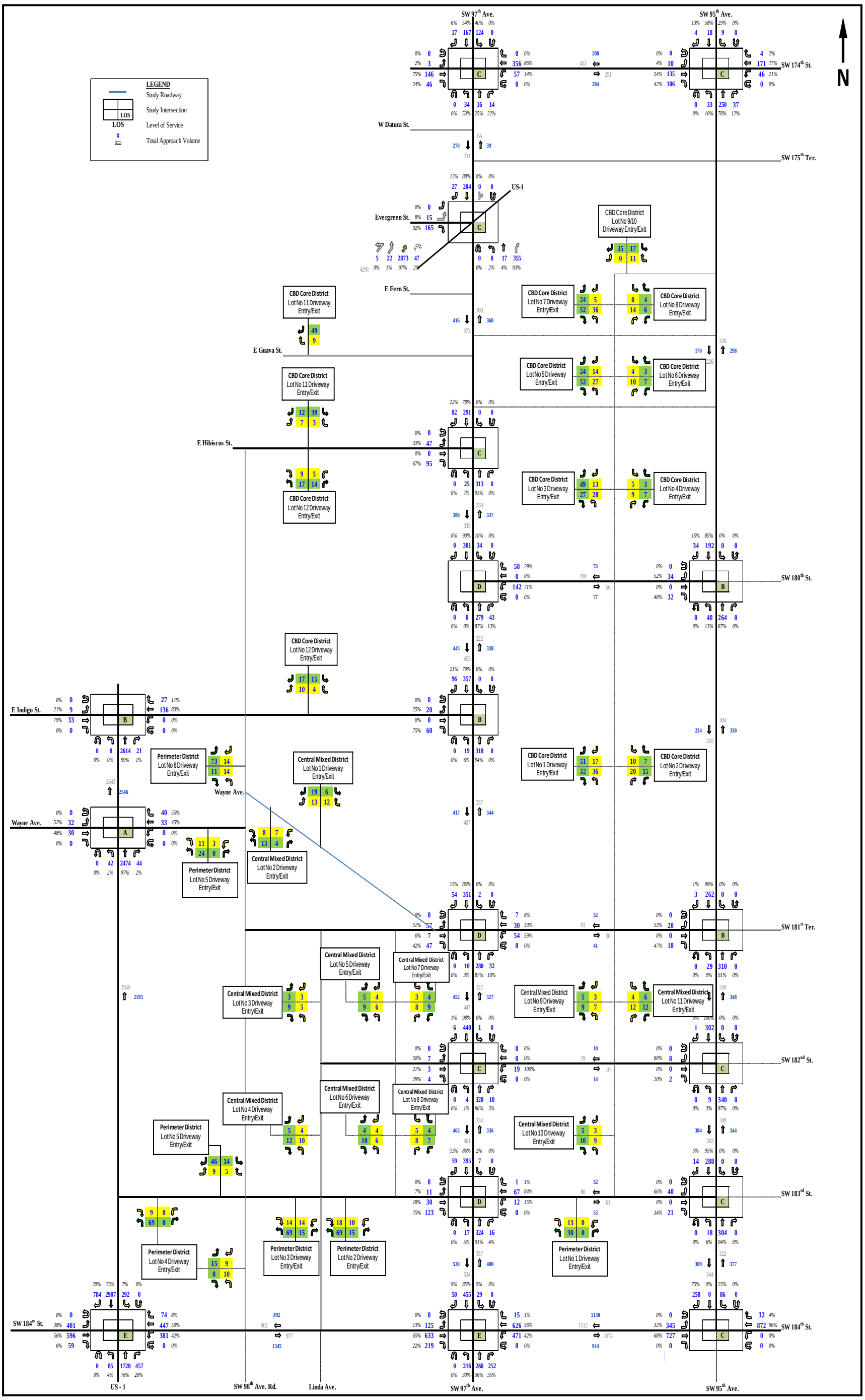

Figure 51 – Total Traffic 2045 (P.M. Peak Hour), with Improvement

6. Traffic Circulation & Access Review

A traffic circulation and access review was performed to identify problem areas relating to traffic flows and to recommend potential improvements that would increase safety while preserving mobility and accessibility throughout the neighborhood for all road users. This review included analysis of the proposed development impact, the adequacy of the access driveways and corridors and the suitability of on-site circulation. The following features were evaluated:

1. Number and location of access points
2. Access design
3. Internal circulation and parking
4. Pedestrians, bicycles and transit

Failure of this review can commonly result in:

- Inadequate access capacity
- On-site congestion and/or congestion on the public street system
- High accident/crash experience
- The development will not achieve financial objectives
- Limited flexibility to adjust the design or operation to unforeseen conditions

6.1. Traffic Circulation & Access Analysis Summary

Access

This development is located between SW 174th Street and SW 184th Street along US-1 and SW 97th Avenue. Review of the site location shows that in general vehicles will access this proposed site from US 1, SW 97th Avenue and SW 184th Street.

Transit

Miami Dade Transit routes has multiple routes and stops along US 1 Busway, SW 97th Avenue, SW 184th Street, SW 176th Street and SW 172nd Street, within and adjacent to the site. Sidewalks are present along many of the site access roadways, servicing each of these stops.

As previously discussed, the Village has indicated that conveniently located premium transit service operations will also be provided within the redeveloped downtown study area, complete with transfer stops to Miami Dade metro bus/Busway. This may include a trolley/shuttle service, park and ride lots, bicycle racks and/or lockers.

Internal Circulation

Review of the internal circulation and parking with the preliminary site plan showed that the design and on-site control give right-of-way to vehicles entering the site. Intersection sight distance appears to be adequate and vehicle turning radius appears to be sufficient and designed for appropriate vehicles.

This development is proposed to be mixed-use and the manner in which trucks will be able to circulate the site to access waste pick-up locations and loading zones is considered to be satisfactory. Based on preliminary site plans and renderings, the following observations were found:

- Delivery and service trucks can easily access the site and conveniently circulate to and from loading areas.
- Vehicular circulation patterns are efficient, safe and clearly understood.
- Pedestrian-vehicular conflicts within the proposed site are minimal and at low speeds and volumes.
- Internal pedestrian walkways are safe and convenient between the sites.
- Emergency vehicles have adequate access to all buildings.
- Interconnectivity between the project sites is provided.

Parking Analysis

Providing the appropriate level and location of parking is important to any successful community, particularly a development such as Arts this project. While insufficient parking can result in negative impacts on properties and limit economic activity, providing too much parking is both expensive and can degrade the character of the community.

Expected Parking Demand

This analysis evaluated the projected parking demand for the project at full build-out. Per Village of Palmetto Bay Code of Ordinances, the minimum typical parking space shall be 18 feet in length and 8.5 feet wide for a 90 degree space. Expected parking requirement codes that would be applicable to the proposed site include multi-family dwelling units, which require one space per bedroom with a minimum of two spaces per dwelling unit; with visitor parking spaces provided in an amount of five percent above the amount of all parking spaces required. Also, commercial and public use parking requirements range from restaurants at one space per 50 gross feet to business/professional offices at one space per 300 gross feet. A portion of the required parking spaces shall be handicap spaces and child/baby stroller spaces, determined by the total number of parking spaces as per the Code of Ordinances.

A conservative approach was taken to complete this analysis, as this mixed-use site contains residential and commercial land uses. There are 5,389 low-rise residential units and 1,566,547 square feet of commercial land use that will be consumed by office, retail and restaurant land uses. To be conservative the commercial land use was distributed evenly, as follows:

- Restaurant - 500,000 ft^2
- Retail - 500,000 ft^2
- Office - 566,547 ft^2

The results of this parking analysis shows that if the parking requirements contained within the Village of Palmetto Bay Zoning Code were applied to the proposed project site at full tenant occupancy, a total of 25,206 parking spaces would be required, as shown in **Table 28**.

Table 28 – Parking Requirement with Village of Palmetto Bay Code

DRTF **100% Occupied** Uses		C Number	Unit of Measure	D Spaces Req'd per unit of measure	C * D = E Total Spaces Req'd	F Occupancy Rate	E * F = G Total Spaces Req'd Based on Occupancy Rate
Multi-Family Dwelling	A	5,389	Units	2 per Unit	10,778	100%	10,778
Multi-Family Dwelling – Visitor Parking	B	5,389	Units	5% * A	539	100%	539
Restaurant	C	500,000	SQUARE FT	1/50 GSF	10,000	100%	10,000
Retail	D	500,000	SQUARE FT	1/250 GSF	2,000	100%	2,000
Office	E	566,547	SQUARE FT	1/300 GSF	1,889	100%	1,889
Total Spaces Required	A				25,206		25,206

Shared Parking Demand

Due to fact that this will be walkable mixed-use development environment, as secondary analysis was completed with a shared parking analysis which examined the number of required parking using a shared parking model that determines how much parking is actually needed when parking is shared. The results of the shared parking analysis will then compared to how much parking demand is actually required.

Visitors can park once and walk to multiple downtown destinations; employees can park once for the day and walk to run errands. Each land use does not need its own dedicated supply of parking, yet that is exactly what standard analysis and zoning indicates is needed. In reality, throughout the day, different uses have different peak demands: for example, an office may have a high demand until 5pm, and a restaurant open for dinner may have a high demand only after 5pm.

To model this type of activity, an adapted shared parking model using inputs from the Urban Land Institute's (ULI) Shared Parking Manual (2nd Edition, 2005) was utilized. Besides demand by time of day, we tailored the shared parking model for the Village of Palmetto Bay project to include a parking demand reduction for 10% internal capture. Mixed-use downtowns allow for parking efficiencies through "internal capture" or "captive market" trips. Such trips are made by patrons who, having already parked, travel between uses without accessing their vehicle. Restaurants and retail services are common generators of internal capture trips in mixed-use developments, as they serve both employees and residents within the same area. The shared parking model includes a conservative percent reduction to account for the mix of the Village's development patterns.

If each land use were to build enough parking to accommodate its peak demand, then the supply of spaces would be grossly underutilized. Shared parking allows for accommodation of peak parking demand, but shares a supply among different uses.

This concept is demonstrated in **Table 29**. The table shows that the project site needs significantly less parking with shared parking, 24.0% less.

Table 29 – Shared Parking Analysis

DRTF Study - Village of Palmetto Bay, Florida
Shared Parking Analysis (Weekday)

	Total Spaces = 10185				Total Spaces = 1800				Total Spaces = 9000				Total Spaces = 1700				
	Residential				**Retail**				**Restaurant**				**General Office**				
	Visitor		Resident		Customer		Employee		Customer		Employee		Visitor		Employee		
	Spaces = 485		Spaces = 9700		Spaces = 1440		Spaces = 360		Spaces = 7650		Spaces = 1350		Spaces = 170		Spaces = 1530		
Hour of Day	Utilization	Spaces	Utilization	Spaces	Utilization	Spaces	Utilization	Spaces	Utilization	Spaces			Utilization	Spaces	Utilization	Spaces	Total
6:00 AM	0%	0	100%	9700	1%	14	10%	36	25%	1913	50%	675	0%	0	3%	46	12384
7:00 AM	10%	49	90%	8730	5%	72	15%	54	50%	3825	75%	1013	1%	2	30%	459	14203
8:00 AM	20%	97	85%	8245	15%	216	40%	144	60%	4590	90%	1215	20%	34	75%	1148	15689
9:00 AM	20%	97	80%	7760	35%	504	75%	270	75%	5738	90%	1215	60%	102	95%	1454	17139
10:00 AM	20%	97	75%	7275	65%	936	85%	306	85%	6503	100%	1350	100%	170	100%	1530	18167
11:00 AM	20%	97	70%	6790	85%	1224	95%	342	90%	6885	100%	1350	45%	77	100%	1530	18295
12:00 PM	20%	97	65%	6305	95%	1368	100%	360	100%	7650	100%	1350	15%	26	90%	1377	18533
1:00 PM	20%	97	70%	6790	100%	1440	100%	360	90%	6885	100%	1350	45%	77	90%	1377	18376
2:00 PM	20%	97	70%	6790	95%	1368	100%	360	50%	3825	100%	1350	100%	170	100%	1530	15490
3:00 PM	20%	97	70%	6790	90%	1296	100%	360	45%	3443	75%	1013	45%	77	100%	1530	14605
4:00 PM	20%	97	75%	7275	90%	1296	100%	360	45%	3443	75%	1013	15%	26	90%	1377	14886
5:00 PM	40%	194	85%	8245	95%	1368	95%	342	75%	5738	95%	1283	10%	17	50%	765	17951
6:00 PM	60%	291	90%	8730	95%	1368	95%	342	80%	6120	95%	1283	5%	9	25%	383	18525
7:00 PM	100%	485	97%	9409	95%	1368	95%	342	80%	6120	95%	1283	2%	3	10%	153	19163
8:00 PM	100%	485	98%	9506	80%	1152	90%	324	80%	6120	95%	1283	1%	2	7%	107	18978
9:00 PM	100%	485	99%	9603	50%	720	75%	270	60%	4590	80%	1080	0%	0	3%	46	16794
10:00 PM	100%	485	100%	9700	30%	432	40%	144	55%	4208	65%	878	0%	0	1%	15	15861
11:00 PM	80%	388	100%	9700	10%	144	15%	54	50%	3825	65%	878	0%	0	0%	0	14989
12:00 AM	50%	243	100%	9700	0%	0	0%	0	25%	1913	35%	473	0%	0	0%	0	12328

Source: Urban Land Institute's Shared Parking

Total Required Code Parking = 25206
Shared Parking = 6043
Parking Needed = 19163

As shown, the shared parking analysis demonstrates that the proposed site will actually need 19,163 parking spaces. These parking spaces are anticipated to be available in the form of garage parking lots, surface parking lots, park-and-ride lots and on-street parking areas. Review of the proposed site plan and the FT&I, Franjo Triangle and U.S. 1 Island District Master Plan showed that on-street parking will be available on each of the streets within the site and is within walking distance to the Busway.

In conclusion, considering the transit reduction, internal capture reduction and the on-street parking available, this analysis shows an attainable parking demand and is more than sufficient to support the proposed site.

Recommendations:

- Installation of on-site bicycle racks or parking stations
- Provide transit information stations within the site including route schedules and maps
- Provide other transit-oriented amenities
- Design/construct the site in a bicycle/pedestrian - and transit-friendly fashion

7. Conclusions and Recommendations

Marlin Engineering was commissioned by the Village Palmetto Bay to provide a Traffic Impact Study for the "Palmetto Bay Downtown Redevelopment", located between SW 174th Street and SW 184th Street along US-1 and SW 97th Avenue in Palmetto Bay, Florida. This project will be built in three development phases; and projected opening will occur in 2025, 2035 and 2045 respectively. The proposed project consists of Residential and Retail/ Office land uses.

This traffic impact study assessed the impacts of the "Palmetto Bay Downtown Redevelopment" project on the surrounding transportation network. The analysis was conducted in accordance with the Village of Palmetto Bay requirements, analyzing transportation corridor segments and intersections.

Results of the existing intersection and segment analysis demonstrates that the intersections and segments operate above the adopted levels of service during the peak hours, with exception to the intersection of SW 97th Avenue at US-1/Evergreen Street which operate below the adopted level of service during the A.M. peak hour. In addition, the US-1 at Wayne Avenue intersection currently operates at a LOS F during the A.M. and P.M. peak hours and the intersection of US-1 at E Indigo Street operates at LOS F during all the analysis periods.

The Village of Palmetto Bay staff recognizes the projected capacity challenges represented along 97th Avenue and has proposed construction of a parallel facility along SW 95th Avenue to alleviated congestion. This proposed new facility would run in the north-south direction, connecting to US 1, just north of SW 174th Street down to SW 184th Street, south of the proposed development. Therefore, future background and future total traffic projections within the study area were performed for future years 2025, 2035 and 2045 for three (3) scenarios, as follows:

a) Background traffic without (w/o) the proposed SW 95th Avenue
b) Background traffic with (w/) the proposed SW 95th Avenue
c) Total traffic which includes background traffic with the proposed SW 95th Avenue corridor, plus project traffic

The future traffic growth rate was developed using a trend analysis based on historical traffic data from the FDOT Traffic DVD database. Historical trend analyses for traffic count stations within the study area indicate that the average annual growth rate is approximately 0.5 percent (%). This conservative annual growth rate was utilized to calculate expected background traffic growth from the existing 2014 traffic volumes for the traffic impact area.

Results of the future background intersection and segment analysis without the proposed SW 95th Avenue demonstrates that the intersections and segments operate above the adopted levels of service during the peak hours, with exception of SW 97th Avenue corridor that fail for years 2025, 2035 and 2045 during the A.M. period and the US-1 corridor that fails in year 2045 for the A.M peak period. In addition, the intersection of SW 97th Avenue at US-1 and Evergreen Street operates below the adopted level of service during the A.M. peak period for the years of 2025, 2035 and 2045. The US-1 at Wayne Avenue intersection operates below the adopted level of service during both the A.M. and P.M. peak periods for

the years of 2025, 2035 and 2045. The intersection of US-1 at E Indigo Street operates below the adopted level of service during the A.M., midday and P.M. peak periods for the years of 2025, 2035 and 2045

Results of the future background intersection and segment analysis with the proposed SW 95th Avenue demonstrates that the intersections and segments operate above the adopted levels of service during the peak hours, with exception to the US-1 corridor that fails for years 2025, 2035 and 2045 during the A.M. period. In addition, the intersection of SW 97th Avenue at US-1 and Evergreen Street operates below the adopted level of service during the A.M. peak period for the year 2045. The US-1 at Wayne Avenue intersection operates below the adopted level of service during both the A.M. and P.M. peak periods for the year of 2025 and the A.M., midday and P.M. peak periods for the years 2035 and 2045. The intersection of US-1 at E Indigo Street operates below the adopted level of service during the A.M., midday and P.M. peak periods for the years of 2025, 2035 and 2045. The SW 184th Street at SW 95th Avenue intersection operates below the adopted level of service during both the A.M. and P.M. peak periods for the years of 2025, 2035 and 2045.

However, as expected, in general overall delay times are reduced and level of service is improved along SW 97th Avenue and at each of the study intersections with the proposed SW 95th Avenue segment in the network.

To perform the future total traffic analysis, the project trips projections were added to the previously calculated balanced and evenly distributed future background conditions along both the SW 97th Avenue and SW 95th Avenue segments for each of the study analysis years. Intersection signal timing green splits were optimized for all future traffic analysis with the cycle lengths held consistent with existing conditions.

Results of the future total traffic intersection and segment analysis with the proposed SW 95th Avenue demonstrates that the intersections and segments operate above the adopted levels of service during the peak hours, with exception to the US-1 corridor that fails in year 2045 for the A.M peak period. In addition, the intersection of SW 97th Avenue at US-1/ Evergreen Street operates below the adopted level of service during the A.M. peak period for the years of 2025 and 2035 and during both A.M. and P.M. peak periods for the year 2045. The US-1 at Wayne Avenue intersection operates below the adopted level of service during both the A.M. and P.M. peak periods for the year of 2025, and for each of the peak periods for the years of 2035 and 2045. The intersection of US-1 at E Indigo Street operates below the adopted level of service during each of the peak periods for the years of 2025, 2035 and 2045. The US-1 at SW 184 Street intersection operates below the adopted level of service during both the both the A.M. and P.M. peak period for the year of 2035 and for each of the peak periods for the year 2045. The SW 184th Street at SW 95th Avenue intersection operates below the adopted level of service during both the both the A.M. and P.M. peak period for the year of 2025 and during each of the peak periods for the years of 2035 and 2045. SW 184th Street at SW 97th Avenue operates below the adopted level of service during the P.M. peak period for the year of 2045.

Taking the number of residential units and density of commercial property into consideration, it anticipated that Miami Dade County Signs and Signals Division will evaluate signal timings and coordination within this region. In addition, with the soon to be expected upgrades to the existing signal

systems utilizing ITS technology such as adaptive signal control technology, transit signal priority, queue jumps and autonomous vehicles; both network and intersection cycle lengths and green splits were optimized for future total traffic conditions with the suggested improvement, as follows:

7. US-1 at SW 184th Street
    a. Add EB thru, left-turn and right-turn lane
    b. Add WB thru and right-turn lane
    c. Add NB right-turn lane
    d. Add SB dual right-turn lane
8. US-1 at Evergreen/97th Avenue
    a. Add EB dual right-turn lanes
    b. Add NB left-turn, thru lane and free-flow right-turn lane
    c. Add SB thru lane
9. US-1 at Indigo Street
    a. Install signal
10. US-1 at Wayne Street
    a. Install signal
11. SW 184th Street at SW 95th Avenue
    a. Install signal
12. SW 184th Street at SW 97th Avenue
    a. Add EB and WB thru lane

An analysis of the future total traffic conditions with improvement showed that each of the failing roadway segments within the study area will operate below acceptable levels of service regardless of the addition of project traffic, with exception to US-1. With the exception of year 2045 along US-1 at SW 184th Street, the intersection level of service analysis for future total traffic conditions with intersection improvements showed that each of the intersections performed above the adopted level of service standards, as compared to the future conditions without project traffic during the AM, midday and PM peak hour. It is recommended that the Village of Palmetto Bay coordinate with FDOT District Six and Miami Dade Public Works Division to further evaluate a long term improvement concept at the US-1 at SW 184th intersection.

As part of the analysis, traffic circulation and access points were reviewed to determine the adequacy of the access driveways and corridors and the suitability of on-site circulation. It was determined that trucks will be able to circulate the site to access waste pick-up locations and loading zones and vehicular circulation patterns are efficient, safe and clearly understood.

In addition, a parking analysis was performed that shows that in comparison to the 25,206 parking spaces required by the Village Code of Ordinances, the project site needs significantly less parking with shared parking, 24.0% less.

In conclusion, the results of this study demonstrate that in general the traffic generated by the proposed development project can be accommodated on the existing roadway network and levels of service

expected without the project can be maintained upon the addition of project-generated traffic with negligible intersection improvements.

In addition, this study proposes a series of improvements encouraging people travel to and from the project to use public transportation as well as promoting bicycling and walking, including:

- Installation of on-site bicycle racks or parking stations
- Provide transit information stations within the site including route schedules and maps
- Provide other transit-oriented amenities
- Design/construct the site in a bicycle/pedestrian - and transit-friendly fashion

Appendix A

Site Plan

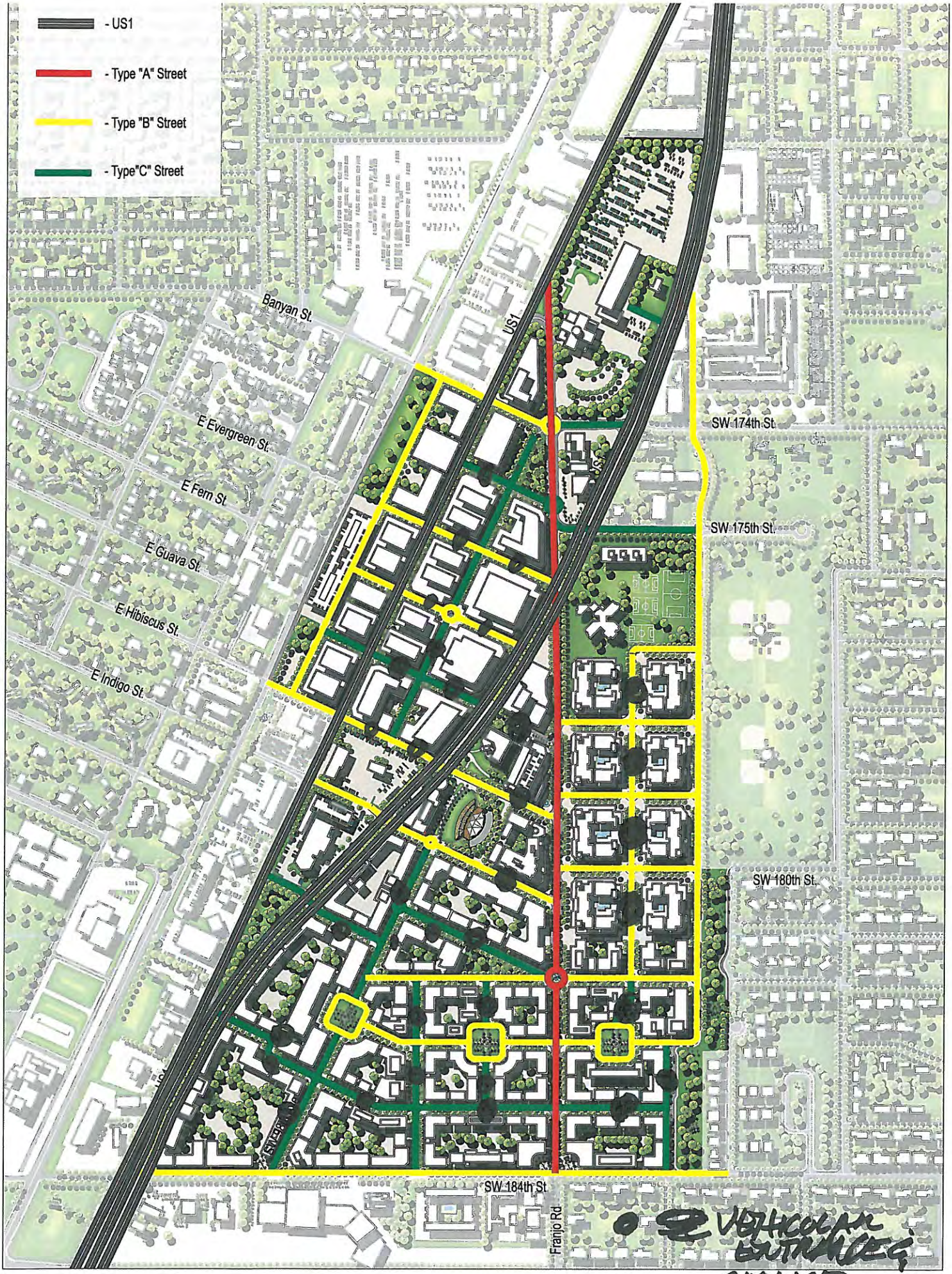

STREET HIERARCHY DIAGRAM

Appendix B

Traffic Data

Marlin Engineering Inc.

2191 NW 97th Ave
Doral, FL 33172

Client: Village of Palmetto Bay
Job No.: 2013007.002
Project: DRTF Traffic Impact Analysis
County: Miami-Dade

File Name : SW 97 Ave @ SW 174 St
Site Code : 00000000
Start Date : 2/13/2014
Page No : 1

Groups Printed- Veh & Peds - Heavy Veh

	SW 97 Ave Southbound					SW 174 St Westbound					SW 97 Ave Northbound					SW 174 St Eastbound					
Start Time	Right	Thru	Left	Peds	App. Total	Right	Thru	Left	Peds	App. Total	Right	Thru	Left	Peds	App. Total	Right	Thru	Left	Peds	App. Total	Int. Total
07:00 AM	0	1	0	0	1	0	4	5	0	9	2	3	7	0	12	3	15	2	0	20	42
07:15 AM	1	0	1	0	2	0	9	5	0	14	1	5	13	0	19	3	22	1	0	26	61
07:30 AM	0	0	0	0	0	0	14	5	0	19	0	3	7	0	10	11	16	3	0	30	59
07:45 AM	1	1	0	0	2	0	10	10	0	20	3	4	9	0	16	14	14	1	0	29	67
Total	2	2	1	0	5	0	37	25	0	62	6	15	36	0	57	31	67	7	0	105	229
08:00 AM	0	0	1	0	1	0	19	11	0	30	2	1	12	0	15	7	30	1	0	38	84
08:15 AM	1	1	0	0	2	0	27	13	0	40	5	2	8	0	15	8	25	1	0	34	91
08:30 AM	0	0	1	0	1	1	21	13	0	35	6	7	7	0	20	19	25	2	0	46	102
08:45 AM	1	0	0	0	1	0	22	13	0	35	8	3	11	1	23	14	42	3	0	59	118
Total	2	1	2	0	5	1	89	50	0	140	21	13	38	1	73	48	122	7	0	177	395
09:00 AM	0	0	1	0	1	0	1	0	0	1	0	0	0	0	0	0	1	0	0	1	3
*** BREAK ***																					
Total	0	0	1	0	1	0	1	0	0	1	0	0	0	0	0	0	1	0	0	1	3
*** BREAK ***																					
11:00 AM	2	1	0	0	3	2	26	8	0	36	8	4	15	5	32	9	21	1	0	31	102
11:15 AM	1	0	0	0	1	0	27	13	0	40	4	1	14	4	23	11	22	1	0	34	98
11:30 AM	1	1	0	0	2	0	25	13	0	38	7	3	15	0	25	15	26	0	0	41	106
11:45 AM	3	1	1	0	5	1	18	17	0	36	5	3	13	0	21	6	25	1	0	32	94
Total	7	3	1	0	11	3	96	51	0	150	24	11	57	9	101	41	94	3	0	138	400
12:00 PM	2	1	1	0	4	2	27	16	0	45	6	3	9	4	22	16	29	1	0	46	117
12:15 PM	2	0	0	0	2	1	18	12	0	31	8	0	9	1	18	17	18	3	0	38	89
12:30 PM	3	3	1	0	7	1	30	7	0	38	5	2	9	1	17	12	27	1	0	40	102
12:45 PM	1	3	2	0	6	0	23	19	0	42	5	2	17	2	26	15	40	1	0	56	130
Total	8	7	4	0	19	4	98	54	0	156	24	7	44	8	83	60	114	6	0	180	438
*** BREAK ***																					
04:00 PM	2	1	1	0	4	3	32	16	0	51	5	0	22	0	27	17	34	3	0	54	136
04:15 PM	1	2	1	0	4	0	22	30	0	52	5	0	16	0	21	17	34	0	0	51	128
04:30 PM	1	0	3	0	4	0	18	14	0	32	2	1	13	3	19	22	28	0	0	50	105
04:45 PM	1	0	2	0	3	0	28	22	0	50	2	4	18	2	26	16	22	3	0	41	120
Total	5	3	7	0	15	3	100	82	0	185	14	5	69	5	93	72	118	6	0	196	489
05:00 PM	5	2	0	0	7	1	35	12	0	48	10	1	14	4	29	17	39	2	0	58	142
05:15 PM	1	0	1	0	2	0	35	20	0	55	8	4	12	3	27	18	21	0	0	39	123
05:30 PM	0	0	0	0	0	0	36	7	0	43	5	0	12	0	17	23	42	0	0	65	125
05:45 PM	1	2	1	0	4	2	24	14	0	40	1	0	7	0	8	23	35	2	0	60	112
Total	7	4	2	0	13	3	130	53	0	186	24	5	45	7	81	81	137	4	0	222	502
Grand Total	31	20	18	0	69	14	551	315	0	880	113	56	289	30	488	333	653	33	0	1019	2456
Apprch %	44.9	29	26.1	0		1.6	62.6	35.8	0		23.2	11.5	59.2	6.1		32.7	64.1	3.2	0		
Total %	1.3	0.8	0.7	0	2.8	0.6	22.4	12.8	0	35.8	4.6	2.3	11.8	1.2	19.9	13.6	26.6	1.3	0	41.5	
Veh & Peds	29	20	17	0	66	14	531	311	0	856	111	55	282	30	478	330	638	32	0	1000	2400
% Veh & Peds	93.5	100	94.4	0	95.7	100	96.4	98.7	0	97.3	98.2	98.2	97.6	100	98	99.1	97.7	97	0	98.1	97.7
Heavy Veh	2	0	1	0	3	0	20	4	0	24	2	1	7	0	10	3	15	1	0	19	56
% Heavy Veh	6.5	0	5.6	0	4.3	0	3.6	1.3	0	2.7	1.8	1.8	2.4	0	2	0.9	2.3	3	0	1.9	2.3

Marlin Engineering Inc.

2191 NW 97th Ave
Doral, FL 33172

Client: Village of Palmetto Bay
Job No.: 2013007.002
Project: DRTF Traffic Impact Analysis
County: Miami-Dade

File Name : SW 97 Ave @ SW 174 St
Site Code : 00000000
Start Date : 2/13/2014
Page No : 2

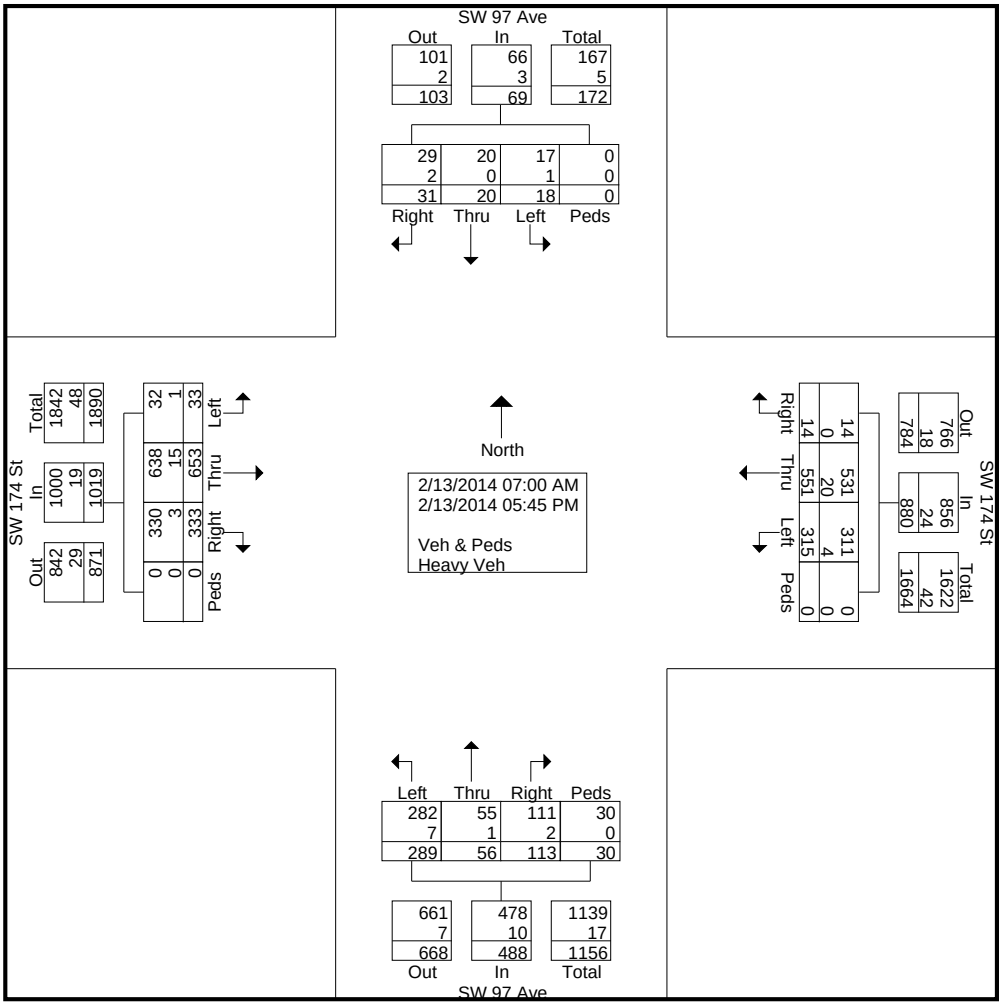

Marlin Engineering Inc.

2191 NW 97th Ave
Doral, FL 33172

Client: Village of Palmetto Bay
Job No.: 2013007.002
Project: DRTF Traffic Impact Analysis
County: Miami-Dade

File Name : SW 97 Ave @ SW 174 St
Site Code : 00000000
Start Date : 2/13/2014
Page No : 3

	SW 97 Ave Southbound					SW 174 St Westbound					SW 97 Ave Northbound					SW 174 St Eastbound					
Start Time	Right	Thru	Left	Peds	App. Total	Right	Thru	Left	Peds	App. Total	Right	Thru	Left	Peds	App. Total	Right	Thru	Left	Peds	App. Total	Int. Total
Peak Hour Analysis From 07:00 AM to 09:45 AM - Peak 1 of 1																					
Peak Hour for Entire Intersection Begins at 08:00 AM																					
08:00 AM	0	0	**1**	0	1	0	19	11	0	30	2	1	**12**	0	15	7	30	1	0	38	84
08:15 AM	**1**	**1**	0	0	**2**	0	**27**	**13**	0	**40**	5	2	8	0	15	8	25	1	0	34	91
08:30 AM	0	0	1	0	1	**1**	21	13	0	35	6	**7**	7	0	20	**19**	25	2	0	46	102
08:45 AM	1	0	0	0	1	0	22	13	0	35	**8**	3	11	**1**	**23**	14	**42**	**3**	0	**59**	**118**
Total Volume	2	1	2	0	5	1	89	50	0	140	21	13	38	1	73	48	122	7	0	177	395
% App. Total																					
PHF	.500	.250	.500	.000	.625	.250	.824	.962	.000	.875	.656	.464	.792	.250	.793	.632	.726	.583	.000	.750	.837

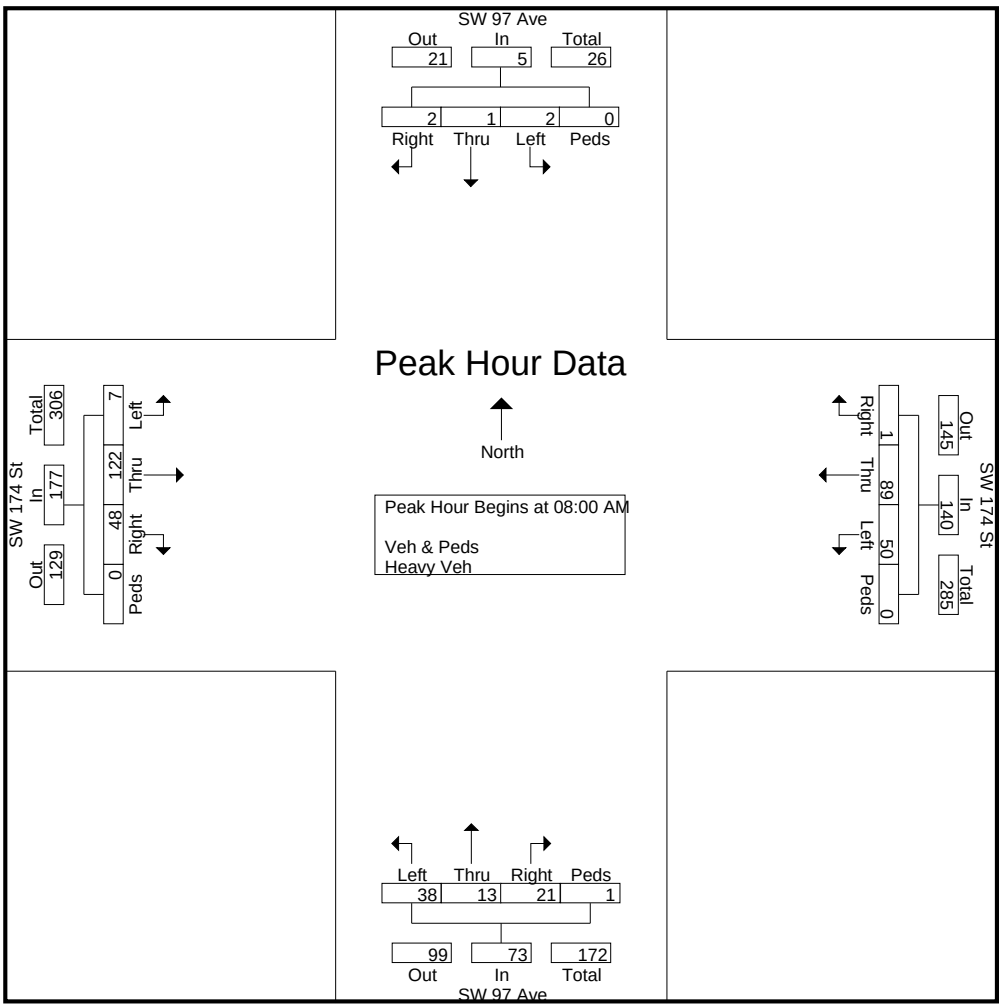

Marlin Engineering Inc.

2191 NW 97th Ave
Doral, FL 33172

Client: Village of Palmetto Bay
Job No.: 2013007.002
Project: DRTF Traffic Impact Analysis
County: Miami-Dade

File Name : SW 97 Ave @ SW 174 St
Site Code : 00000000
Start Date : 2/13/2014
Page No : 4

	SW 97 Ave Southbound					SW 174 St Westbound					SW 97 Ave Northbound					SW 174 St Eastbound					
Start Time	Right	Thru	Left	Peds	App. Total	Right	Thru	Left	Peds	App. Total	Right	Thru	Left	Peds	App. Total	Right	Thru	Left	Peds	App. Total	Int. Total
Peak Hour Analysis From 10:00 AM to 01:45 PM - Peak 1 of 1																					
Peak Hour for Entire Intersection Begins at 12:00 PM																					
12:00 PM	2	1	1	0	4	**2**	27	16	0	**45**	6	**3**	9	**4**	22	16	29	1	0	46	117
12:15 PM	2	0	0	0	2	1	18	12	0	31	**8**	0	9	1	18	**17**	18	**3**	0	38	89
12:30 PM	**3**	**3**	1	0	**7**	1	**30**	7	0	38	5	2	9	1	17	12	27	1	0	40	102
12:45 PM	1	3	**2**	0	6	0	23	**19**	0	42	5	2	**17**	2	**26**	15	**40**	1	0	**56**	**130**
Total Volume	8	7	4	0	19	4	98	54	0	156	24	7	44	8	83	60	114	6	0	180	438
% App. Total																					
PHF	.667	.583	.500	.000	.679	.500	.817	.711	.000	.867	.750	.583	.647	.500	.798	.882	.713	.500	.000	.804	.842

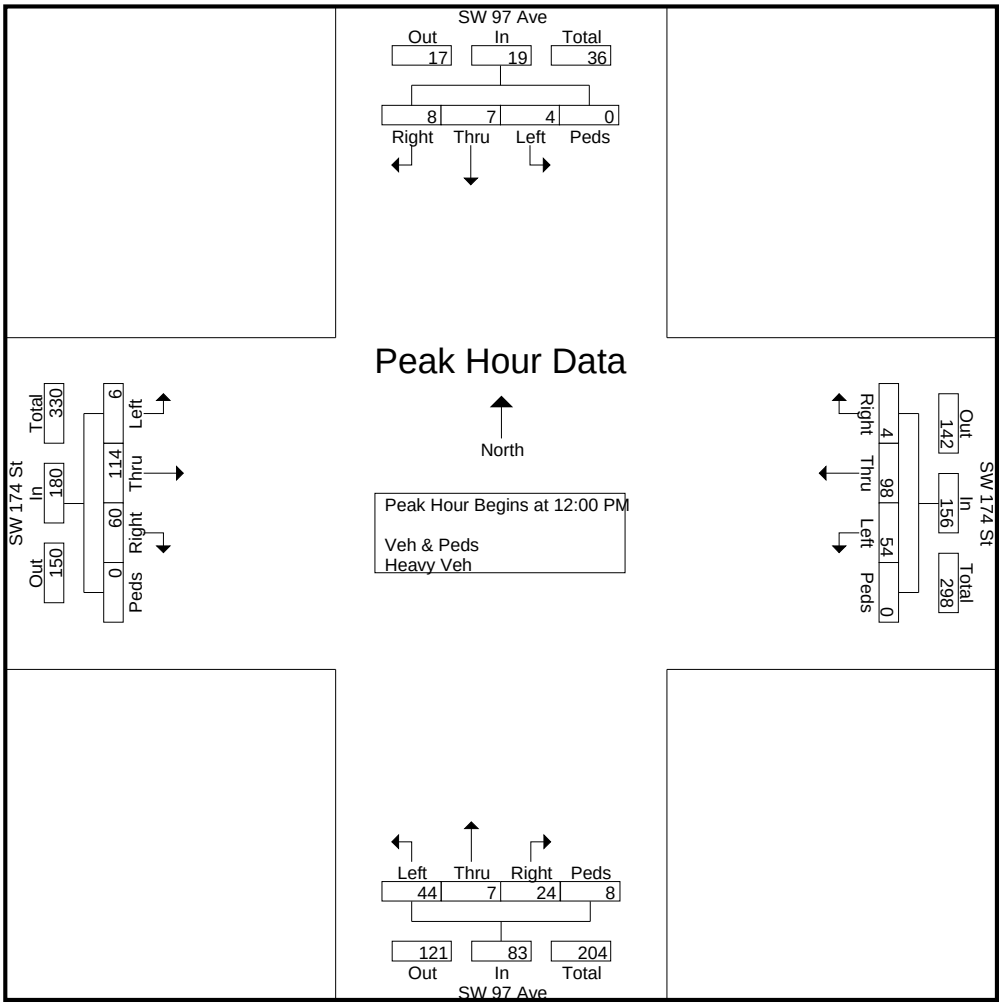

Marlin Engineering Inc.

2191 NW 97th Ave
Doral, FL 33172

Client: Village of Palmetto Bay
Job No.: 2013007.002
Project: DRTF Traffic Impact Analysis
County: Miami-Dade

File Name : SW 97 Ave @ SW 174 St
Site Code : 00000000
Start Date : 2/13/2014
Page No : 5

	SW 97 Ave Southbound					SW 174 St Westbound					SW 97 Ave Northbound					SW 174 St Eastbound					
Start Time	Right	Thru	Left	Peds	App. Total	Right	Thru	Left	Peds	App. Total	Right	Thru	Left	Peds	App. Total	Right	Thru	Left	Peds	App. Total	Int. Total
Peak Hour Analysis From 02:00 PM to 05:45 PM - Peak 1 of 1																					
Peak Hour for Entire Intersection Begins at 04:45 PM																					
04:45 PM	1	0	**2**	0	3	0	28	**22**	0	50	2	**4**	**18**	2	26	16	22	**3**	0	41	120
05:00 PM	**5**	**2**	0	0	**7**	**1**	35	12	0	48	**10**	1	14	**4**	**29**	17	39	2	0	58	**142**
05:15 PM	1	0	1	0	2	0	35	20	0	**55**	8	4	12	3	27	18	21	0	0	39	123
05:30 PM	0	0	0	0	0	0	**36**	7	0	43	5	0	12	0	17	**23**	**42**	0	0	**65**	125
Total Volume	7	2	3	0	12	1	134	61	0	196	25	9	56	9	99	74	124	5	0	203	510
% App. Total																					
PHF	.350	.250	.375	.000	.429	.250	.931	.693	.000	.891	.625	.563	.778	.563	.853	.804	.738	.417	.000	.781	.898

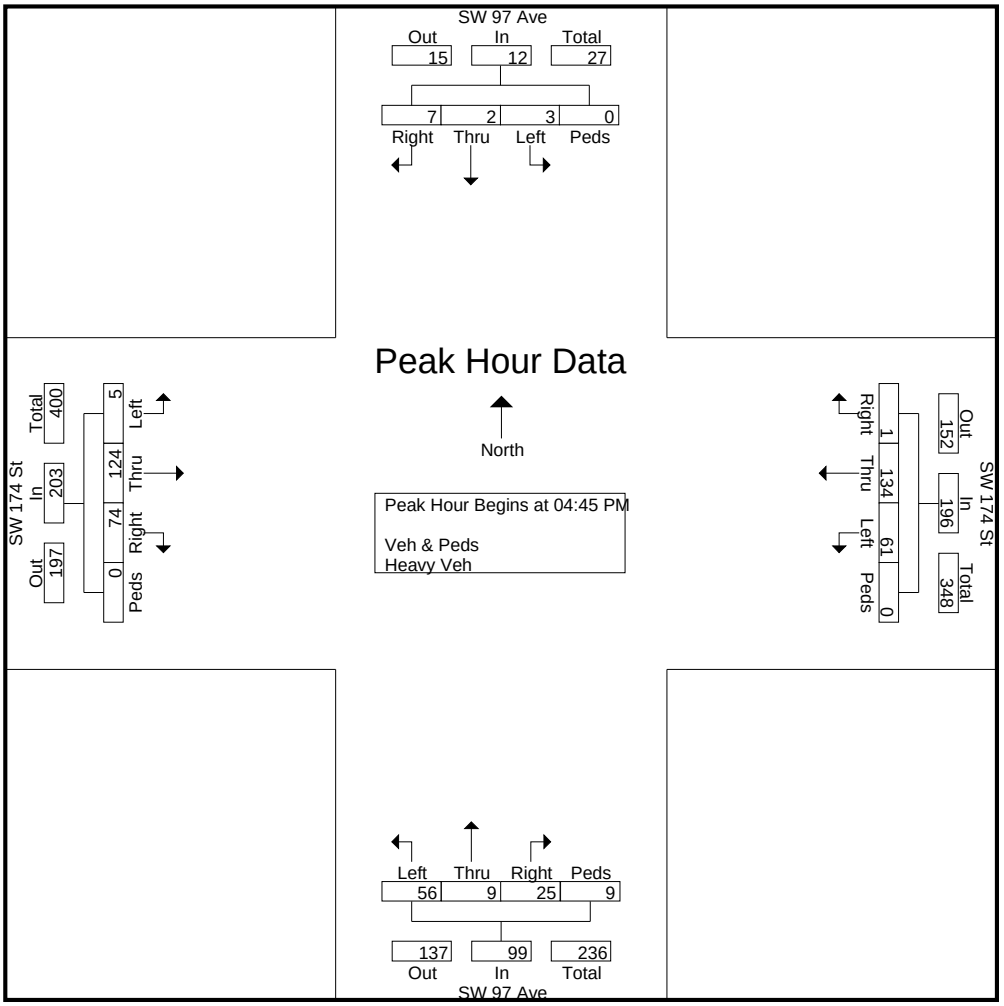

Marlin Engineering Inc.

2191 NW 97th Ave
Doral, FL 33172

Client: Vllage of Palmetto Bay
Job No.: 2013007.002
Project: DRTF Traffic Impact Analysis
County: Miami-Dade

File Name : US1 @ SW 97 Ave
Site Code : 00000000
Start Date : 2/13/2014
Page No : 1

Groups Printed- New Group - New Group

	SW 97 Ave Southbound					SW 97 Ave Northbound					US-1 From Southwest						Evergreen St Eastbound					
Start Time	Right	Thru	Hard Left	Peds	App. Total	Bear Right	Thru	Left	Peds	App. Total	Hard Right	Thru	Bear Left	Hard Left	Peds	App. Total	Right	Bear Left	Left	Peds	App. Total	Int. Total
07:00 AM	0	4	0	0	4	72	2	0	0	74	0	351	0	0	0	351	6	1	0	0	7	436
07:15 AM	0	2	0	0	2	84	3	2	0	89	0	963	2	0	0	965	17	0	0	0	17	1073
07:30 AM	0	0	0	0	0	91	3	0	0	94	3	735	0	0	0	738	18	1	0	0	19	851
07:45 AM	2	7	0	0	9	107	4	1	0	112	3	700	0	1	0	704	19	0	0	0	19	844
Total	2	13	0	0	15	354	12	3	0	369	6	2749	2	1	0	2758	60	2	0	0	62	3204
08:00 AM	1	1	0	0	2	100	6	0	0	106	0	696	0	0	0	696	23	0	0	0	23	827
08:15 AM	1	1	0	0	2	70	6	0	0	76	8	634	2	0	0	644	41	0	0	0	41	763
08:30 AM	1	1	0	0	2	63	11	0	0	74	9	185	1	1	0	196	5	0	0	0	5	277
08:45 AM	2	4	0	0	6	88	10	0	0	98	7	247	1	0	0	255	6	0	0	0	6	365
Total	5	7	0	0	12	321	33	0	0	354	24	1762	4	1	0	1791	75	0	0	0	75	2232
*** BREAK ***																						
10:45 AM	0	0	0	0	0	2	0	0	0	2	0	0	0	0	0	0	0	0	0	0	0	2
Total	0	0	0	0	0	2	0	0	0	2	0	0	0	0	0	0	0	0	0	0	0	2
11:00 AM	0	3	0	2	5	43	2	0	0	45	7	503	0	0	0	510	24	2	0	0	26	586
11:15 AM	7	2	0	0	9	47	8	0	0	55	5	441	2	0	0	448	31	0	0	0	31	543
11:30 AM	0	1	0	0	1	33	13	8	0	54	10	435	3	0	0	448	33	0	0	0	33	536
11:45 AM	2	0	0	0	2	35	6	3	0	44	5	507	1	1	0	514	35	0	0	0	35	595
Total	9	6	0	2	17	158	29	11	0	198	27	1886	6	1	0	1920	123	2	0	0	125	2260
12:00 PM	2	1	0	2	5	52	10	2	0	64	10	464	1	0	0	475	34	1	0	0	35	579
12:15 PM	2	4	0	0	6	55	3	1	0	59	13	522	0	2	0	537	42	0	0	0	42	644
12:30 PM	9	6	0	1	16	53	5	1	0	59	8	474	2	2	0	486	30	0	0	0	30	591
12:45 PM	0	2	0	0	2	61	3	0	0	64	9	508	2	0	0	519	50	1	0	0	51	636
Total	13	13	0	3	29	221	21	4	0	246	40	1968	5	4	0	2017	156	2	0	0	158	2450
01:00 PM	0	0	0	0	0	0	0	0	0	0	6	320	3	1	0	330	26	0	0	0	26	356
*** BREAK ***																						
Total	0	0	0	0	0	0	0	0	0	0	6	320	3	1	0	330	26	0	0	0	26	356
*** BREAK ***																						
04:00 PM	5	2	0	0	7	38	4	1	0	43	10	456	4	0	0	470	40	0	0	0	40	560
04:15 PM	7	9	0	0	16	52	5	0	0	57	10	515	3	1	0	529	23	0	0	0	23	625
04:30 PM	4	5	0	0	9	58	7	0	0	65	7	513	5	0	0	525	39	1	0	0	40	639
04:45 PM	4	9	0	0	13	77	5	1	0	83	11	494	5	2	0	512	27	1	0	0	28	636
Total	20	25	0	0	45	225	21	2	0	248	38	1978	17	3	0	2036	129	2	0	0	131	2460
05:00 PM	7	12	0	0	19	70	3	1	0	74	8	543	4	0	0	555	30	2	0	0	32	680
05:15 PM	5	11	0	0	16	60	3	3	0	66	8	502	6	1	0	517	25	1	0	0	26	625
05:30 PM	7	10	0	0	17	62	4	2	0	68	8	546	4	1	0	559	26	0	0	0	26	670
05:45 PM	5	10	0	0	15	49	2	1	0	52	7	432	3	3	0	445	15	0	0	0	15	527
Total	24	43	0	0	67	241	12	7	0	260	31	2023	17	5	0	2076	96	3	0	0	99	2502
Grand Total	73	107	0	5	185	1522	128	27	0	1677	172	12686	54	16	0	12928	665	11	0	0	676	15466
Apprch %	39.5	57.8	0	2.7		90.8	7.6	1.6	0		1.3	98.1	0.4	0.1	0		98.4	1.6	0	0		
Total %	0.5	0.7	0	0	1.2	9.8	0.8	0.2	0	10.8	1.1	82	0.3	0.1	0	83.6	4.3	0.1	0	0	4.4	
New Group	71	105	0	5	181	1483	125	27	0	1635	161	12525	54	16	0	12756	628	11	0	0	639	15211
% New Group	97.3	98.1	0	100	97.8	97.4	97.7	100	0	97.5	93.6	98.7	100	100	0	98.7	94.4	100	0	0	94.5	98.4
New Group	2	2	0	0	4	39	3	0	0	42	11	161	0	0	0	172	37	0	0	0	37	255
% New Group	2.7	1.9	0	0	2.2	2.6	2.3	0	0	2.5	6.4	1.3	0	0	0	1.3	5.6	0	0	0	5.5	1.6

Marlin Engineering Inc.

2191 NW 97th Ave
Doral, FL 33172

Client: Vllage of Palmetto Bay
Job No.: 2013007.002
Project: DRTF Traffic Impact Analysis
County: Miami-Dade

File Name : US1 @ SW 97 Ave
Site Code : 00000000
Start Date : 2/13/2014
Page No : 2

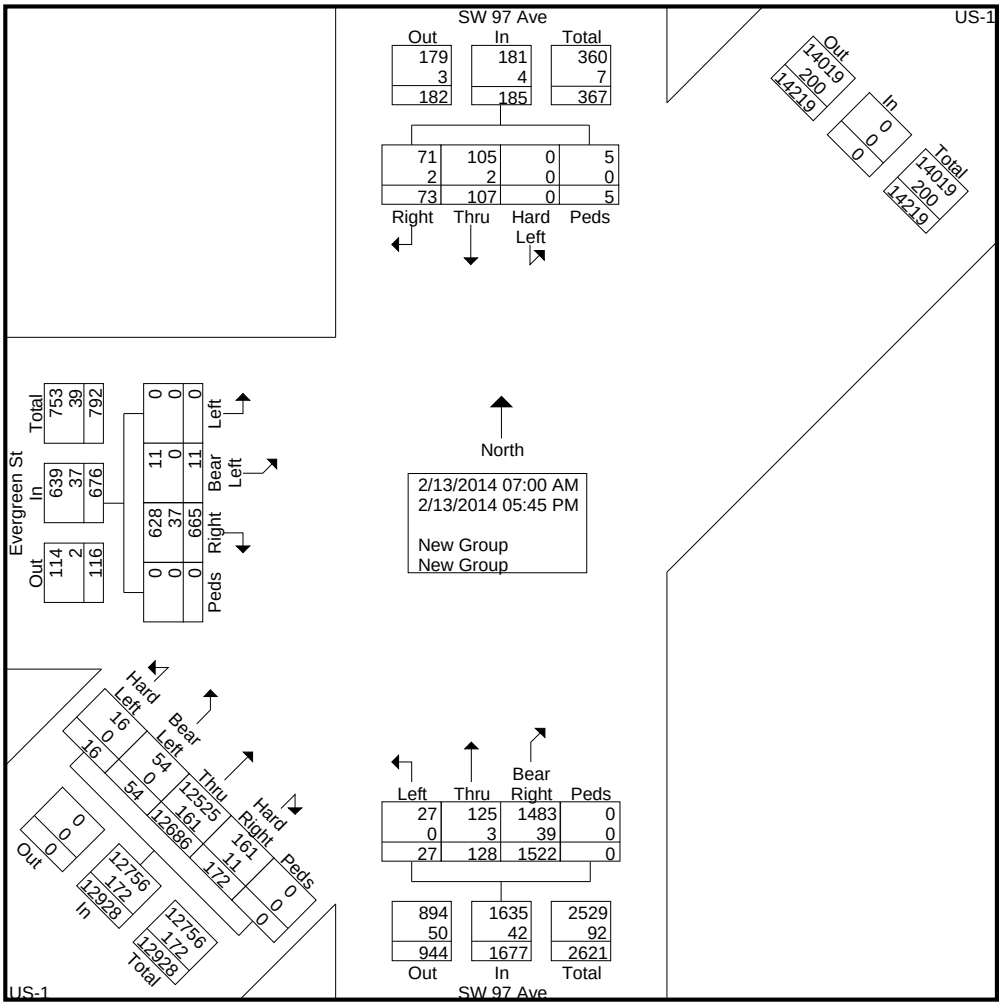

Marlin Engineering Inc.

2191 NW 97th Ave
Doral, FL 33172

Client: Vllage of Palmetto Bay
Job No.: 2013007.002
Project: DRTF Traffic Impact Analysis
County: Miami-Dade

File Name : US1 @ SW 97 Ave
Site Code : 00000000
Start Date : 2/13/2014
Page No : 3

	SW 97 Ave Southbound					SW 97 Ave Northbound					US-1 From Southwest						Evergreen St Eastbound					
Start Time	Right	Thru	Hard Left	Peds	App. Total	Bear Right	Thru	Left	Peds	App. Total	Hard Right	Thru	Bear Left	Hard Left	Peds	App. Total	Right	Bear Left	Left	Peds	App. Total	Int. Total
Peak Hour Analysis From 07:00 AM to 08:45 AM - Peak 1 of 1																						
Peak Hour for Entire Intersection Begins at 07:15 AM																						
07:15 AM	0	2	0	0	2	84	3	**2**	0	89	0	**963**	**2**	0	0	**965**	17	0	0	0	17	**1073**
07:30 AM	0	0	0	0	0	91	3	0	0	94	**3**	735	0	0	0	738	18	**1**	0	0	19	851
07:45 AM	**2**	**7**	0	0	**9**	**107**	4	1	0	**112**	3	700	0	**1**	0	704	19	0	0	0	19	844
08:00 AM	1	1	0	0	2	100	**6**	0	0	106	0	696	0	0	0	696	**23**	0	0	0	**23**	827
Total Volume	3	10	0	0	13	382	16	3	0	401	6	3094	2	1	0	3103	77	1	0	0	78	3595
% App. Total	23.1	76.9	0	0		95.3	4	0.7	0		0.2	99.7	0.1	0	0		98.7	1.3	0	0		
PHF	.375	.357	.000	.000	.361	.893	.667	.375	.000	.895	.500	.803	.250	.250	.000	.804	.837	.250	.000	.000	.848	.838

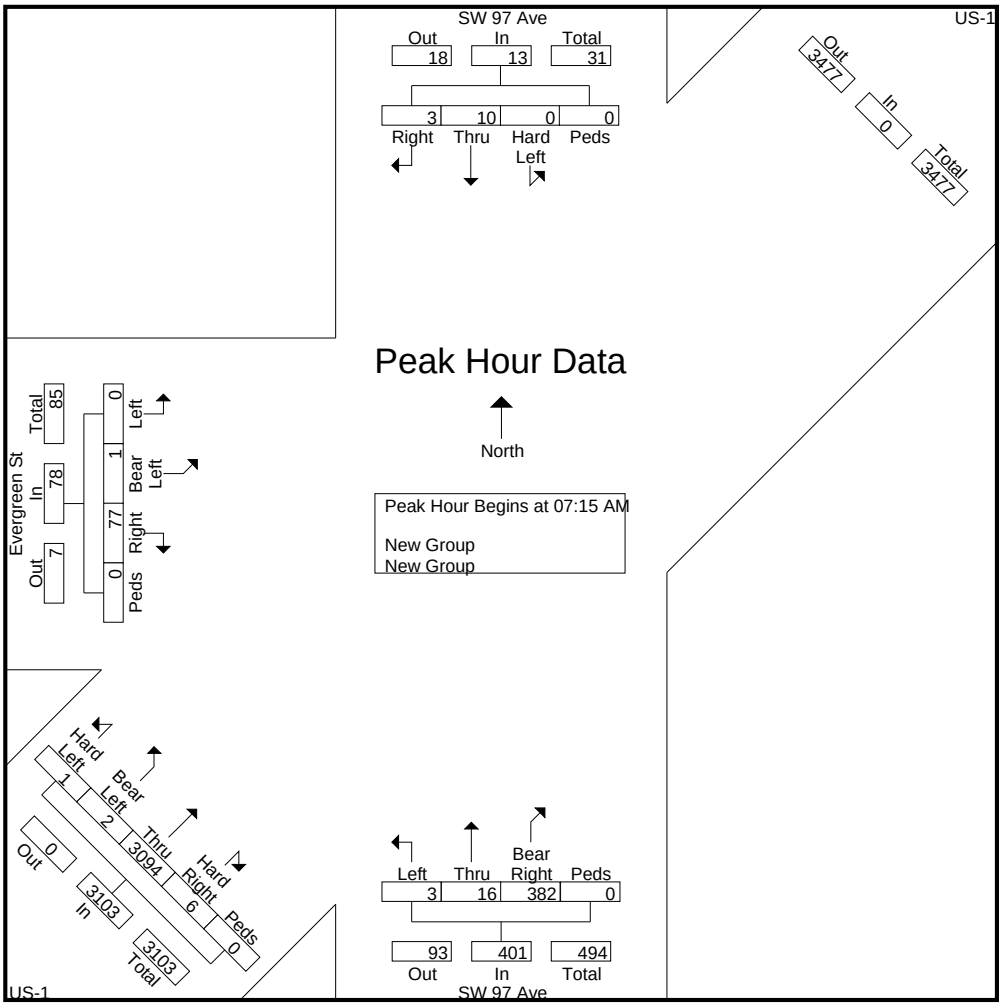

Marlin Engineering Inc.

2191 NW 97th Ave
Doral, FL 33172

Client: Vllage of Palmetto Bay
Job No.: 2013007.002
Project: DRTF Traffic Impact Analysis
County: Miami-Dade

File Name : US1 @ SW 97 Ave
Site Code : 00000000
Start Date : 2/13/2014
Page No : 4

	SW 97 Ave Southbound					SW 97 Ave Northbound					US-1 From Southwest						Evergreen St Eastbound					
Start Time	Right	Thru	Hard Left	Peds	App. Total	Bear Right	Thru	Left	Peds	App. Total	Hard Right	Thru	Bear Left	Hard Left	Peds	App. Total	Right	Bear Left	Left	Peds	App. Total	Int. Total
Peak Hour Analysis From 11:00 AM to 12:45 PM - Peak 1 of 1																						
Peak Hour for Entire Intersection Begins at 12:00 PM																						
12:00 PM	2	1	0	**2**	5	52	**10**	**2**	0	**64**	10	464	1	0	0	475	34	**1**	0	0	35	579
12:15 PM	2	4	0	0	6	55	3	1	0	59	**13**	**522**	0	**2**	0	**537**	42	0	0	0	42	**644**
12:30 PM	**9**	**6**	0	1	**16**	53	5	1	0	59	8	474	**2**	2	0	486	30	0	0	0	30	591
12:45 PM	0	2	0	0	2	**61**	3	0	0	64	9	508	2	0	0	519	**50**	1	0	0	**51**	636
Total Volume	13	13	0	3	29	221	21	4	0	246	40	1968	5	4	0	2017	156	2	0	0	158	2450
% App. Total	44.8	44.8	0	10.3		89.8	8.5	1.6	0		2	97.6	0.2	0.2	0		98.7	1.3	0	0		
PHF	.361	.542	.000	.375	.453	.906	.525	.500	.000	.961	.769	.943	.625	.500	.000	.939	.780	.500	.000	.000	.775	.951

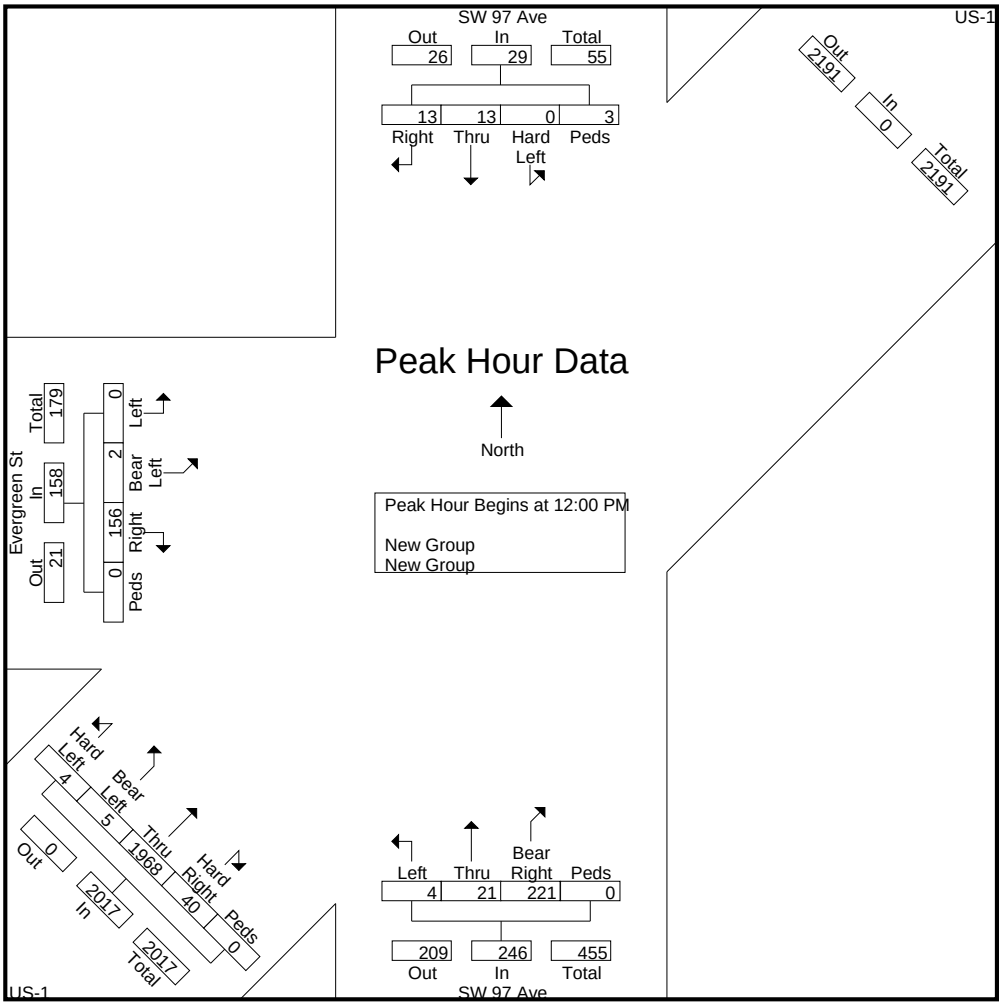

Marlin Engineering Inc.

2191 NW 97th Ave
Doral, FL 33172

Client: Vllage of Palmetto Bay
Job No.: 2013007.002
Project: DRTF Traffic Impact Analysis
County: Miami-Dade

File Name : US1 @ SW 97 Ave
Site Code : 00000000
Start Date : 2/13/2014
Page No : 5

	SW 97 Ave Southbound					SW 97 Ave Northbound					US-1 From Southwest						Evergreen St Eastbound					
Start Time	Right	Thru	Hard Left	Peds	App. Total	Bear Right	Thru	Left	Peds	App. Total	Hard Right	Thru	Bear Left	Hard Left	Peds	App. Total	Right	Bear Left	Left	Peds	App. Total	Int. Total
Peak Hour Analysis From 04:00 PM to 05:45 PM - Peak 1 of 1																						
Peak Hour for Entire Intersection Begins at 04:45 PM																						
04:45 PM	4	9	0	0	13	**77**	**5**	1	0	**83**	**11**	494	5	**2**	0	512	27	1	0	0	28	636
05:00 PM	**7**	**12**	0	0	**19**	70	3	1	0	74	8	543	4	0	0	555	**30**	**2**	0	0	**32**	**680**
05:15 PM	5	11	0	0	16	60	3	**3**	0	66	8	502	**6**	1	0	517	25	1	0	0	26	625
05:30 PM	7	10	0	0	17	62	4	2	0	68	8	**546**	4	1	0	**559**	26	0	0	0	26	670
Total Volume	23	42	0	0	65	269	15	7	0	291	35	2085	19	4	0	2143	108	4	0	0	112	2611
% App. Total	35.4	64.6	0	0		92.4	5.2	2.4	0		1.6	97.3	0.9	0.2	0		96.4	3.6	0	0		
PHF	.821	.875	.000	.000	.855	.873	.750	.583	.000	.877	.795	.955	.792	.500	.000	.958	.900	.500	.000	.000	.875	.960

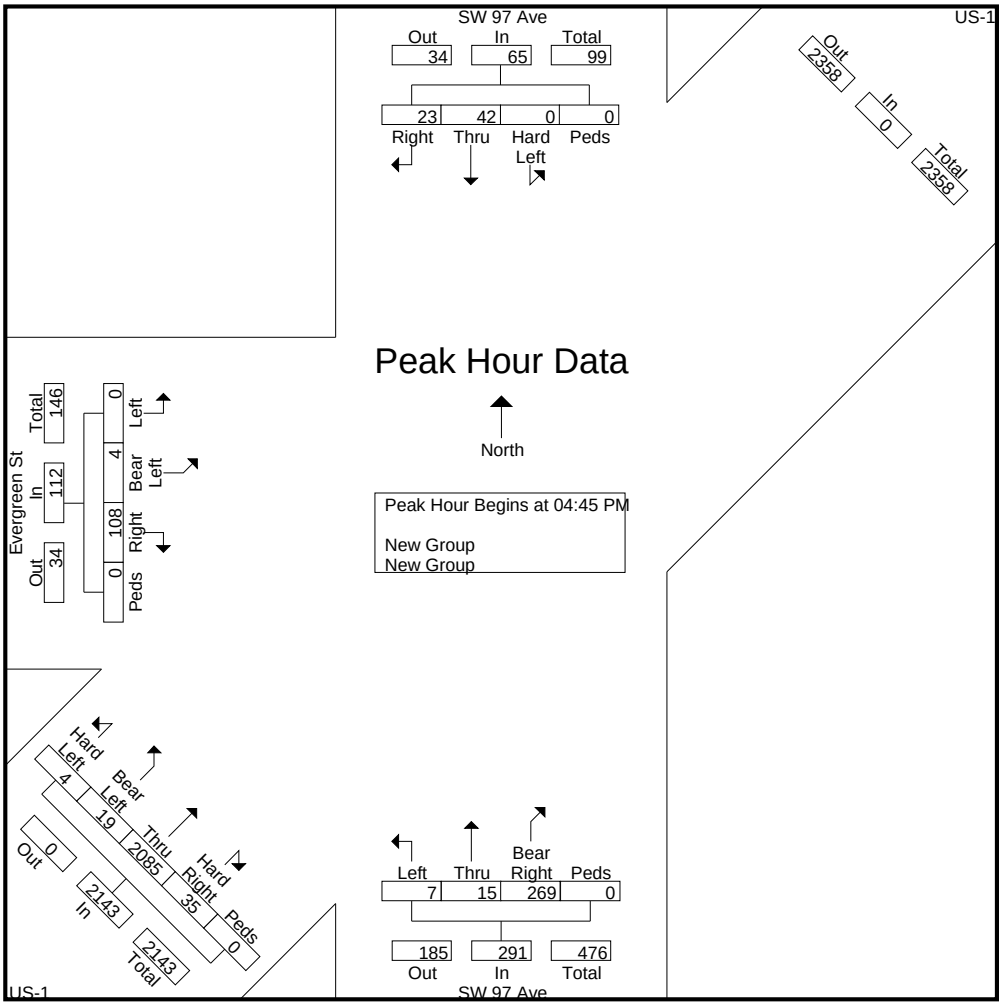

Marlin Engineering Inc.

2191 NW 97th Ave
Doral, FL 33172

Client: Village of Palmetto Bay
Job No.: 2013007.002
Project: DRTF Traffic Impact Analysis
County: Miami-Dade

File Name : SW 97 Ave @ Hibiscus St
Site Code : 00000000
Start Date : 2/12/2014
Page No : 1

Groups Printed- Veh & Peds - Heavy Veh

	SW 97 Ave Southbound					Hibiscus St Westbound					SW 97 Ave Northbound					Hibiscus St Eastbound					
Start Time	Right	Thru	Left	Peds	App. Total	Right	Thru	Left	Peds	App. Total	Right	Thru	Left	Peds	App. Total	Right	Thru	Left	Peds	App. Total	Int. Total
07:00 AM	0	2	0	0	2	0	0	0	0	0	1	97	5	0	103	6	0	0	0	6	111
07:15 AM	0	11	0	0	11	0	0	0	0	0	0	98	4	0	102	4	0	2	0	6	119
07:30 AM	1	11	0	0	12	0	0	0	0	0	0	91	8	0	99	9	0	1	0	10	121
07:45 AM	0	10	0	0	10	0	0	0	0	0	0	114	4	0	118	5	0	1	0	6	134
Total	1	34	0	0	35	0	0	0	0	0	1	400	21	0	422	24	0	4	0	28	485
08:00 AM	0	9	0	0	9	0	0	0	0	0	0	126	9	0	135	10	0	3	0	13	157
08:15 AM	0	19	0	0	19	0	0	0	0	0	0	101	10	0	111	4	0	3	0	7	137
08:30 AM	0	27	0	0	27	0	0	0	0	0	0	117	11	0	128	8	0	2	0	10	165
08:45 AM	0	17	0	0	17	0	0	0	0	0	0	108	2	0	110	8	0	0	0	8	135
Total	0	72	0	0	72	0	0	0	0	0	0	452	32	0	484	30	0	8	0	38	594
*** BREAK ***																					
11:00 AM	0	20	0	0	20	0	0	0	0	0	0	74	5	0	79	12	0	2	1	15	114
11:15 AM	0	17	0	0	17	0	1	0	0	1	0	57	3	1	61	13	0	1	1	15	94
11:30 AM	2	17	0	0	19	0	0	0	0	0	0	64	11	0	75	11	0	2	1	14	108
11:45 AM	0	30	0	0	30	0	0	0	0	0	0	70	6	0	76	11	0	2	2	15	121
Total	2	84	0	0	86	0	1	0	0	1	0	265	25	1	291	47	0	7	5	59	437
12:00 PM	1	29	0	0	30	1	0	0	0	1	0	65	6	0	71	12	0	1	0	13	115
12:15 PM	0	24	0	0	24	0	0	0	0	0	0	65	5	0	70	8	0	1	1	10	104
12:30 PM	1	17	0	0	18	0	1	0	0	1	0	56	10	0	66	11	0	2	1	14	99
12:45 PM	0	27	0	0	27	0	0	2	0	2	0	64	8	0	72	5	0	2	1	8	109
Total	2	97	0	0	99	1	1	2	0	4	0	250	29	0	279	36	0	6	3	45	427
*** BREAK ***																					
04:00 PM	2	39	0	0	41	0	0	1	0	1	1	68	11	0	80	4	0	0	0	4	126
04:15 PM	0	32	0	0	32	1	0	0	0	1	1	56	6	0	63	15	0	0	1	16	112
04:30 PM	1	43	0	0	44	0	0	0	0	0	0	78	4	0	82	14	0	2	0	16	142
04:45 PM	3	38	0	0	41	0	0	0	0	0	0	62	7	0	69	14	0	1	0	15	125
Total	6	152	0	0	158	1	0	1	0	2	2	264	28	0	294	47	0	3	1	51	505
05:00 PM	5	64	0	0	69	0	0	0	0	0	0	60	2	0	62	22	0	1	0	23	154
05:15 PM	0	58	0	0	58	0	0	0	0	0	0	69	6	0	75	24	0	1	0	25	158
05:30 PM	0	39	0	0	39	0	0	0	0	0	0	64	3	0	67	17	0	1	1	19	125
05:45 PM	0	40	0	0	40	0	0	0	0	0	0	52	3	0	55	13	0	0	0	13	108
Total	5	201	0	0	206	0	0	0	0	0	0	245	14	0	259	76	0	3	1	80	545
Grand Total	16	640	0	0	656	2	2	3	0	7	3	1876	149	1	2029	260	0	31	10	301	2993
Apprch %	2.4	97.6	0	0		28.6	28.6	42.9	0		0.1	92.5	7.3	0		86.4	0	10.3	3.3		
Total %	0.5	21.4	0	0	21.9	0.1	0.1	0.1	0	0.2	0.1	62.7	5	0	67.8	8.7	0	1	0.3	10.1	
Veh & Peds	16	634	0	0	650	2	2	3	0	7	3	1855	149	1	2008	257	0	31	10	298	2963
% Veh & Peds	100	99.1	0	0	99.1	100	100	100	0	100	100	98.9	100	100	99	98.8	0	100	100	99	99
Heavy Veh	0	6	0	0	6	0	0	0	0	0	0	21	0	0	21	3	0	0	0	3	30
% Heavy Veh	0	0.9	0	0	0.9	0	0	0	0	0	0	1.1	0	0	1	1.2	0	0	0	1	1

Marlin Engineering Inc.

2191 NW 97th Ave
Doral, FL 33172

Client: Village of Palmetto Bay
Job No.: 2013007.002
Project: DRTF Traffic Impact Analysis
County: Miami-Dade

File Name : SW 97 Ave @ Hibiscus St
Site Code : 00000000
Start Date : 2/12/2014
Page No : 2

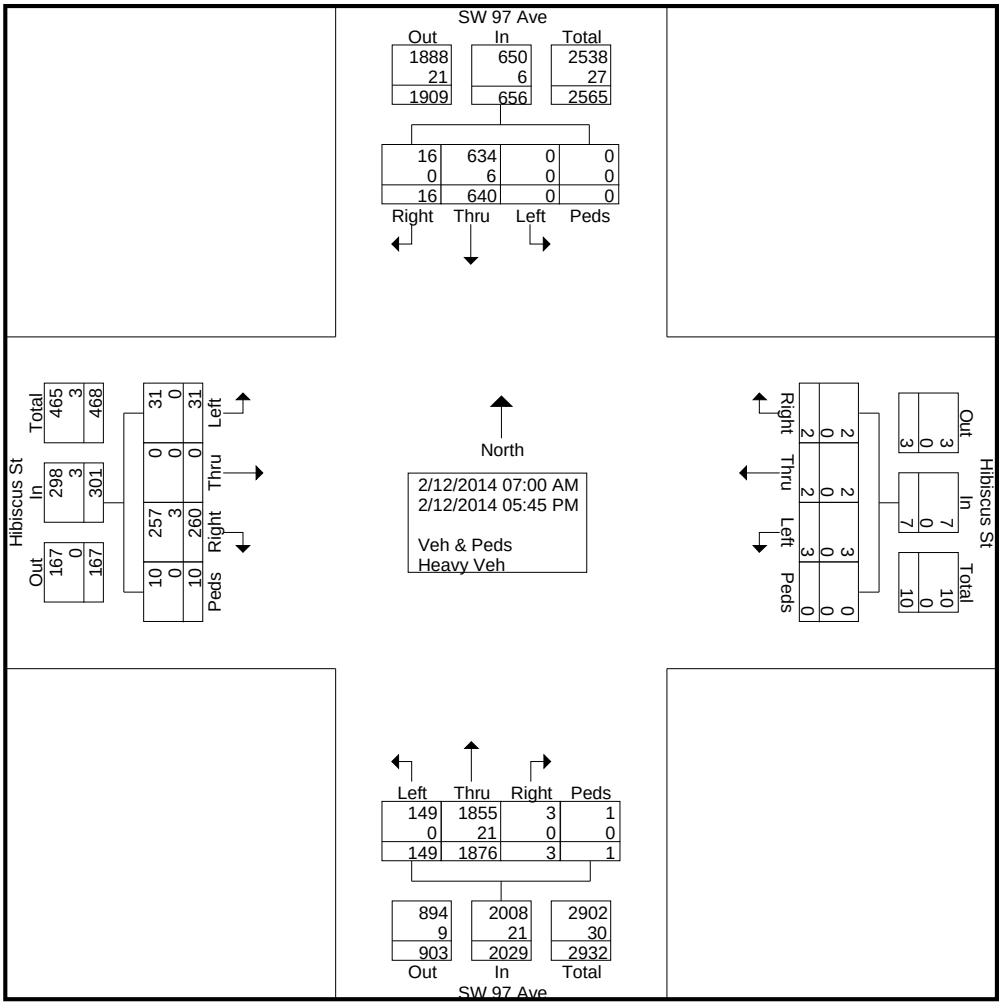

Marlin Engineering Inc.

2191 NW 97th Ave
Doral, FL 33172

Client: Village of Palmetto Bay
Job No.: 2013007.002
Project: DRTF Traffic Impact Analysis
County: Miami-Dade

File Name : SW 97 Ave @ Hibiscus St
Site Code : 00000000
Start Date : 2/12/2014
Page No : 3

	SW 97 Ave Southbound					Hibiscus St Westbound					SW 97 Ave Northbound					Hibiscus St Eastbound					
Start Time	Right	Thru	Left	Peds	App. Total	Right	Thru	Left	Peds	App. Total	Right	Thru	Left	Peds	App. Total	Right	Thru	Left	Peds	App. Total	Int. Total
Peak Hour Analysis From 07:00 AM to 08:45 AM - Peak 1 of 1																					
Peak Hour for Entire Intersection Begins at 08:00 AM																					
08:00 AM	0	9	0	0	9	0	0	0	0	0	0	**126**	9	0	**135**	**10**	0	**3**	0	**13**	157
08:15 AM	0	19	0	0	19	0	0	0	0	0	0	101	10	0	111	4	0	3	0	7	137
08:30 AM	0	**27**	0	0	**27**	0	0	0	0	0	0	117	**11**	0	128	8	0	2	0	10	**165**
08:45 AM	0	17	0	0	17	0	0	0	0	0	0	108	2	0	110	8	0	0	0	8	135
Total Volume	0	72	0	0	72	0	0	0	0	0	0	452	32	0	484	30	0	8	0	38	594
% App. Total																					
PHF	.000	.667	.000	.000	.667	.000	.000	.000	.000	.000	.000	.897	.727	.000	.896	.750	.000	.667	.000	.731	.900

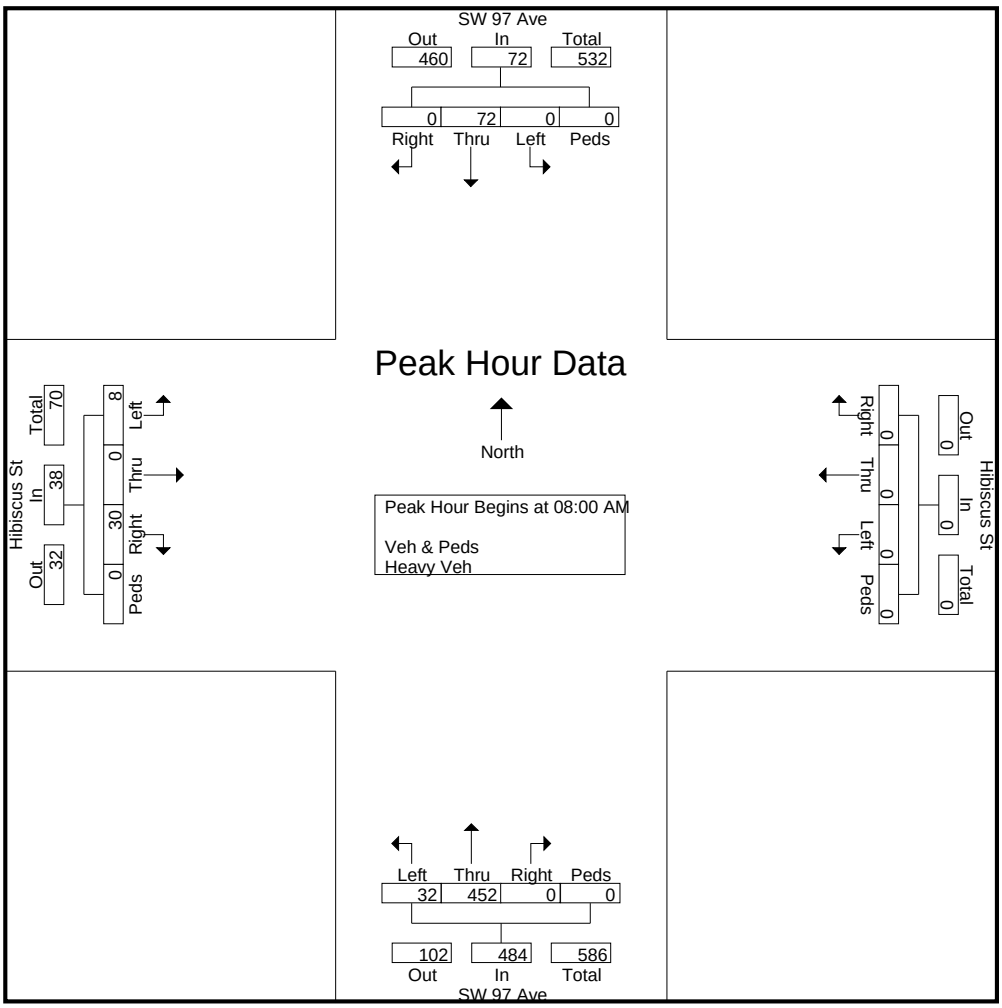

Marlin Engineering Inc.

2191 NW 97th Ave
Doral, FL 33172

Client: Village of Palmetto Bay
Job No.: 2013007.002
Project: DRTF Traffic Impact Analysis
County: Miami-Dade

File Name : SW 97 Ave @ Hibiscus St
Site Code : 00000000
Start Date : 2/12/2014
Page No : 4

	SW 97 Ave Southbound					Hibiscus St Westbound					SW 97 Ave Northbound					Hibiscus St Eastbound					
Start Time	Right	Thru	Left	Peds	App. Total	Right	Thru	Left	Peds	App. Total	Right	Thru	Left	Peds	App. Total	Right	Thru	Left	Peds	App. Total	Int. Total
Peak Hour Analysis From 11:00 AM to 12:45 PM - Peak 1 of 1																					
Peak Hour for Entire Intersection Begins at 11:30 AM																					
11:30 AM	**2**	17	0	0	19	0	0	0	0	0	0	64	**11**	0	75	11	0	**2**	1	14	108
11:45 AM	0	**30**	0	0	**30**	0	0	0	0	0	0	**70**	6	0	**76**	11	0	2	**2**	**15**	**121**
12:00 PM	1	29	0	0	30	**1**	0	0	0	**1**	0	65	6	0	71	**12**	0	1	0	13	115
12:15 PM	0	24	0	0	24	0	0	0	0	0	0	65	5	0	70	8	0	1	1	10	104
Total Volume	3	100	0	0	103	1	0	0	0	1	0	264	28	0	292	42	0	6	4	52	448
% App. Total																					
PHF	.375	.833	.000	.000	.858	.250	.000	.000	.000	.250	.000	.943	.636	.000	.961	.875	.000	.750	.500	.867	.926

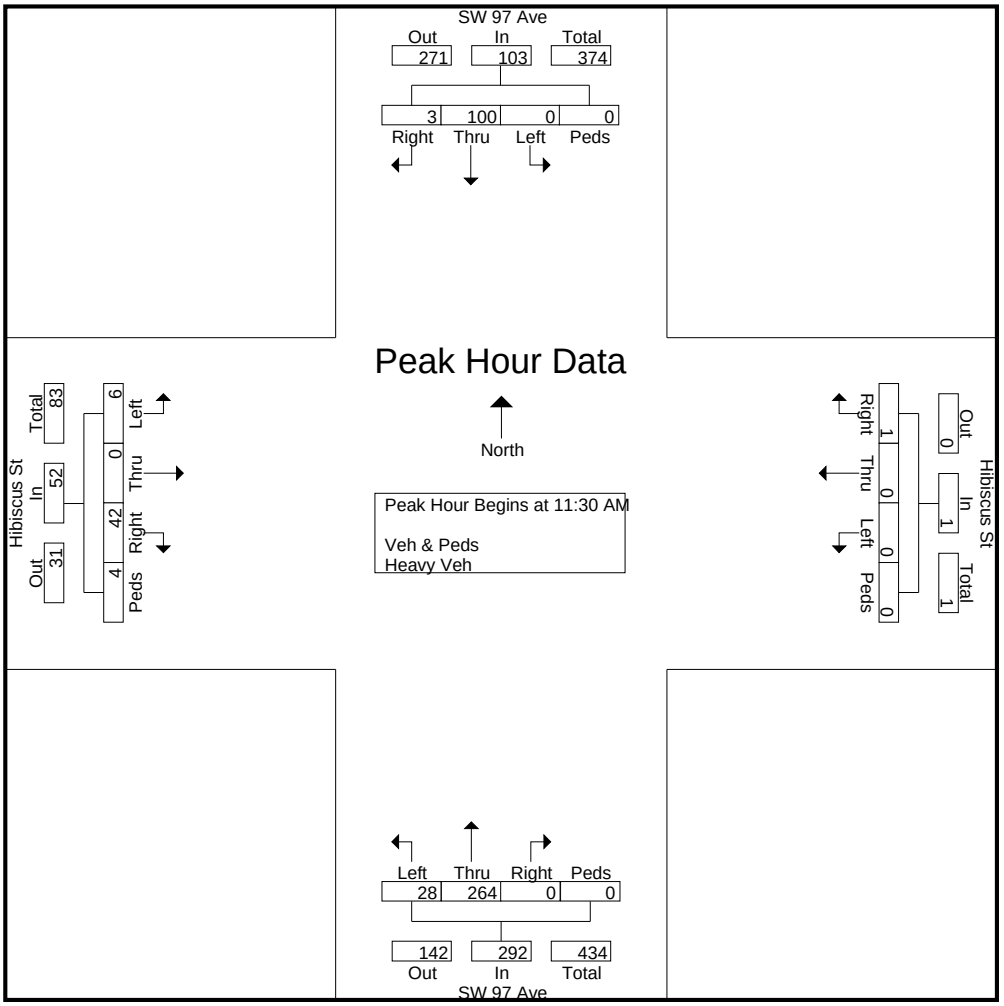

Marlin Engineering Inc.

2191 NW 97th Ave
Doral, FL 33172

Client: Village of Palmetto Bay
Job No.: 2013007.002
Project: DRTF Traffic Impact Analysis
County: Miami-Dade

File Name : SW 97 Ave @ Hibiscus St
Site Code : 00000000
Start Date : 2/12/2014
Page No : 5

	SW 97 Ave Southbound					Hibiscus St Westbound					SW 97 Ave Northbound					Hibiscus St Eastbound					
Start Time	Right	Thru	Left	Peds	App. Total	Right	Thru	Left	Peds	App. Total	Right	Thru	Left	Peds	App. Total	Right	Thru	Left	Peds	App. Total	Int. Total
Peak Hour Analysis From 04:00 PM to 05:45 PM - Peak 1 of 1																					
Peak Hour for Entire Intersection Begins at 04:30 PM																					
04:30 PM	1	43	0	0	44	0	0	0	0	0	0	**78**	4	0	**82**	14	0	**2**	0	16	142
04:45 PM	3	38	0	0	41	0	0	0	0	0	0	62	**7**	0	69	14	0	1	0	15	125
05:00 PM	**5**	**64**	0	0	**69**	0	0	0	0	0	0	60	2	0	62	22	0	1	0	23	154
05:15 PM	0	58	0	0	58	0	0	0	0	0	0	69	6	0	75	**24**	0	1	0	**25**	**158**
Total Volume	9	203	0	0	212	0	0	0	0	0	0	269	19	0	288	74	0	5	0	79	579
% App. Total																					
PHF	.450	.793	.000	.000	.768	.000	.000	.000	.000	.000	.000	.862	.679	.000	.878	.771	.000	.625	.000	.790	.916

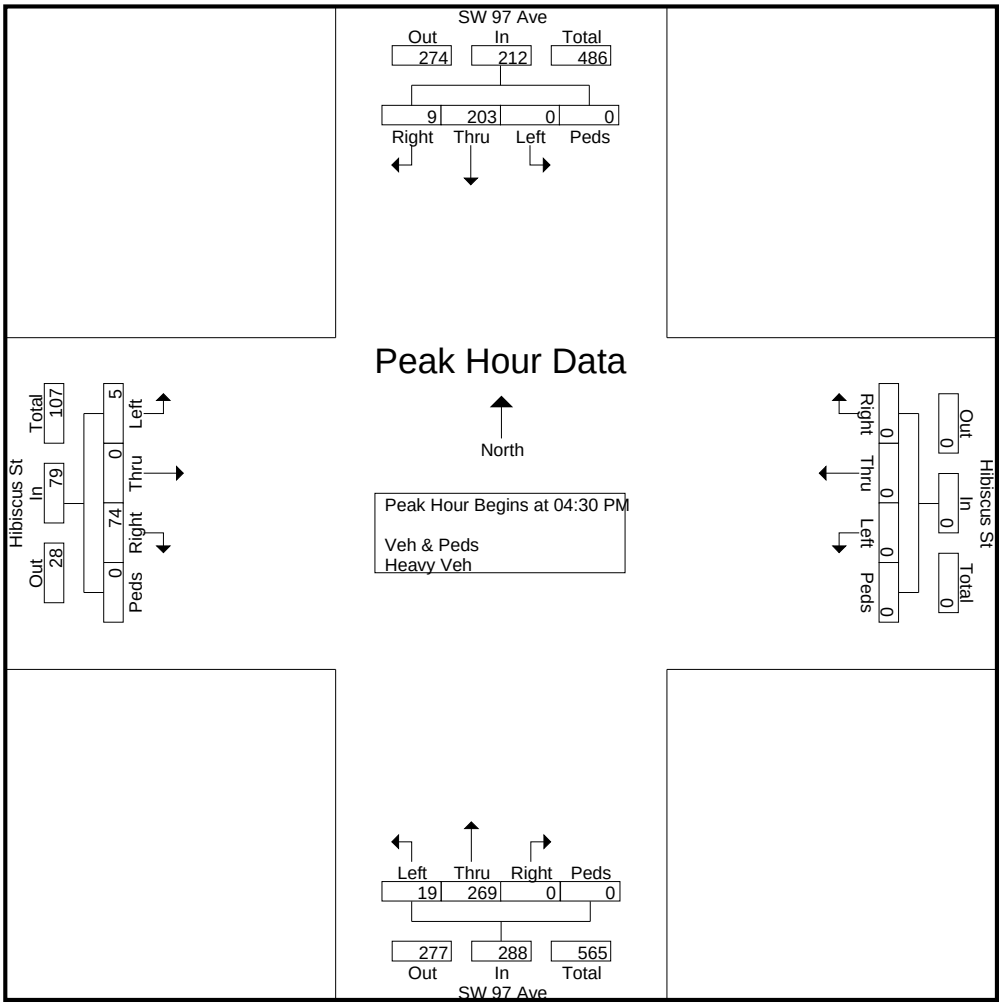

Marlin Engineering Inc.

2191 NW 97th Ave
Doral, FL 33172

Client: Village of Palmetto Bay
Job No.: 2013007.002
Project: DRTF Traffic Impact Analysis
County: Miami-Dade

File Name : SW 97 Ave @ SW 180 St
Site Code : 00000000
Start Date : 2/12/2014
Page No : 1

Groups Printed- Veh & Peds - Heavy Veh

	SW 97 Ave Southbound				SW 180 St Westbound				SW 97 Ave Northbound				
Start Time	Thru	Left	Peds	App. Total	Right	Left	Peds	App. Total	Right	Thru	Peds	App. Total	Int. Total
07:00 AM	3	4	0	7	7	1	0	8	11	93	0	104	119
07:15 AM	8	1	0	9	11	4	0	15	9	93	0	102	126
07:30 AM	17	4	0	21	10	5	0	15	5	93	0	98	134
07:45 AM	13	3	0	16	11	9	0	20	9	114	0	123	159
Total	41	12	0	53	39	19	0	58	34	393	0	427	538
08:00 AM	17	3	0	20	17	10	0	27	5	121	0	126	173
08:15 AM	21	1	0	22	13	7	0	20	5	106	0	111	153
08:30 AM	34	4	0	38	14	11	3	28	7	117	0	124	190
08:45 AM	18	4	0	22	5	8	0	13	9	100	0	109	144
Total	90	12	0	102	49	36	3	88	26	444	0	470	660
*** BREAK ***													
11:00 AM	24	5	1	30	8	7	0	15	6	76	0	82	127
11:15 AM	28	3	0	31	10	5	0	15	4	54	0	58	104
11:30 AM	24	1	0	25	11	11	2	24	7	67	0	74	123
11:45 AM	37	8	0	45	7	8	0	15	0	65	0	65	125
Total	113	17	1	131	36	31	2	69	17	262	0	279	479
12:00 PM	31	8	0	39	8	11	0	19	2	67	0	69	127
12:15 PM	29	1	0	30	11	9	0	20	2	67	0	69	119
12:30 PM	25	1	0	26	9	9	3	21	5	59	0	64	111
12:45 PM	29	2	0	31	6	5	1	12	2	68	0	70	113
Total	114	12	0	126	34	34	4	72	11	261	0	272	470
*** BREAK ***													
04:00 PM	45	4	0	49	13	8	0	21	3	66	0	69	139
04:15 PM	39	3	0	42	0	2	0	2	6	61	0	67	111
04:30 PM	54	4	0	58	15	12	1	28	5	72	0	77	163
04:45 PM	50	8	0	58	10	9	0	19	8	67	0	75	152
Total	188	19	0	207	38	31	1	70	22	266	0	288	565
05:00 PM	70	5	0	75	11	20	0	31	12	53	0	65	171
05:15 PM	66	9	0	75	11	8	0	19	3	57	0	60	154
05:30 PM	43	10	0	53	10	9	1	20	6	57	0	63	136
05:45 PM	44	9	0	53	15	10	1	26	7	49	0	56	135
Total	223	33	0	256	47	47	2	96	28	216	0	244	596
Grand Total	769	105	1	875	243	198	12	453	138	1842	0	1980	3308
Apprch %	87.9	12	0.1		53.6	43.7	2.6		7	93	0		
Total %	23.2	3.2	0	26.5	7.3	6	0.4	13.7	4.2	55.7	0	59.9	
Veh & Peds	756	103	1	860	237	195	12	444	134	1806	0	1940	3244
% Veh & Peds	98.3	98.1	100	98.3	97.5	98.5	100	98	97.1	98	0	98	98.1
Heavy Veh	13	2	0	15	6	3	0	9	4	36	0	40	64
% Heavy Veh	1.7	1.9	0	1.7	2.5	1.5	0	2	2.9	2	0	2	1.9

Marlin Engineering Inc.

2191 NW 97th Ave
Doral, FL 33172

Client: Village of Palmetto Bay
Job No.: 2013007.002
Project: DRTF Traffic Impact Analysis
County: Miami-Dade

File Name : SW 97 Ave @ SW 180 St
Site Code : 00000000
Start Date : 2/12/2014
Page No : 2

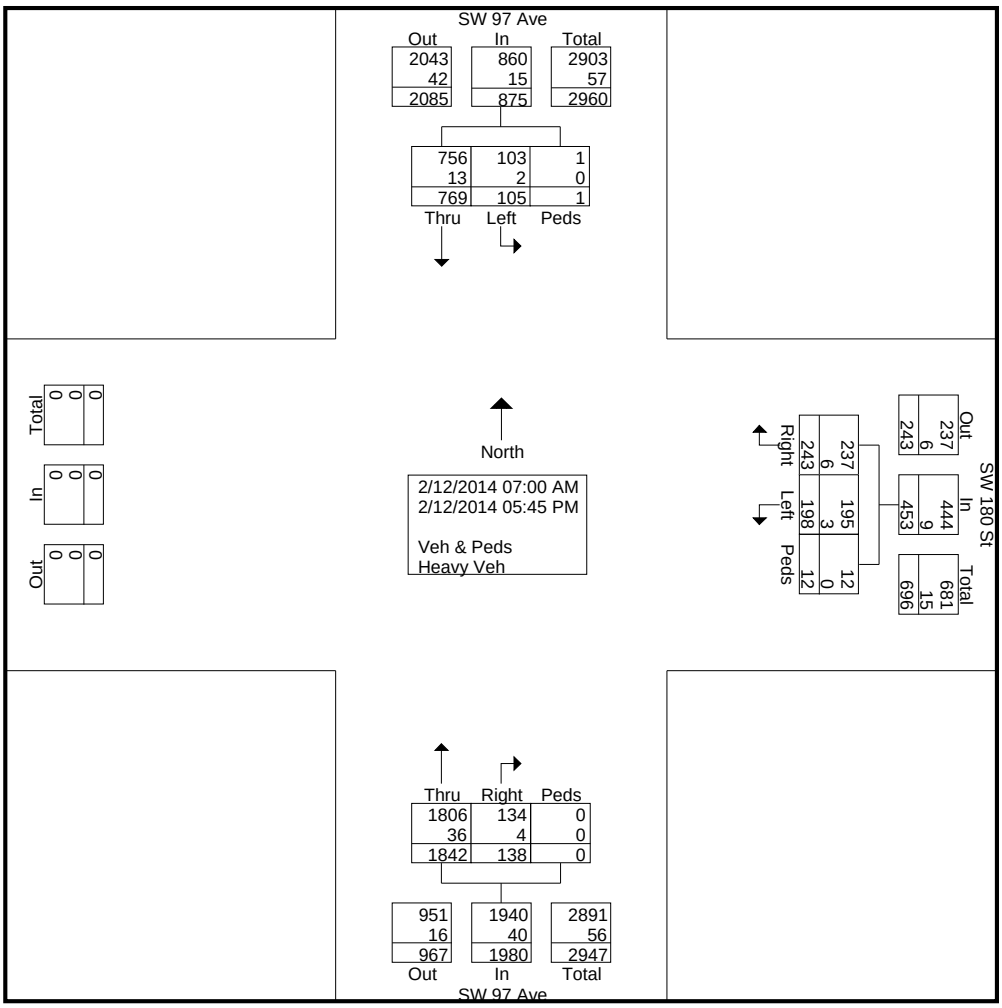

Marlin Engineering Inc.

2191 NW 97th Ave
Doral, FL 33172

Client: Village of Palmetto Bay
Job No.: 2013007.002
Project: DRTF Traffic Impact Analysis
County: Miami-Dade

File Name : SW 97 Ave @ SW 180 St
Site Code : 00000000
Start Date : 2/12/2014
Page No : 3

	SW 97 Ave Southbound				SW 180 St Westbound				SW 97 Ave Northbound				
Start Time	Thru	Left	Peds	App. Total	Right	Left	Peds	App. Total	Right	Thru	Peds	App. Total	Int. Total
Peak Hour Analysis From 07:00 AM to 08:45 AM - Peak 1 of 1													
Peak Hour for Entire Intersection Begins at 07:45 AM													
07:45 AM	13	3	0	16	11	9	0	20	**9**	114	0	123	159
08:00 AM	17	3	0	20	**17**	10	0	27	5	**121**	0	**126**	173
08:15 AM	21	1	0	22	13	7	0	20	5	106	0	111	153
08:30 AM	**34**	**4**	0	**38**	14	**11**	**3**	**28**	7	117	0	124	**190**
Total Volume	85	11	0	96	55	37	3	95	26	458	0	484	675
% App. Total	88.5	11.5	0		57.9	38.9	3.2		5.4	94.6	0		
PHF	.625	.688	.000	.632	.809	.841	.250	.848	.722	.946	.000	.960	.888

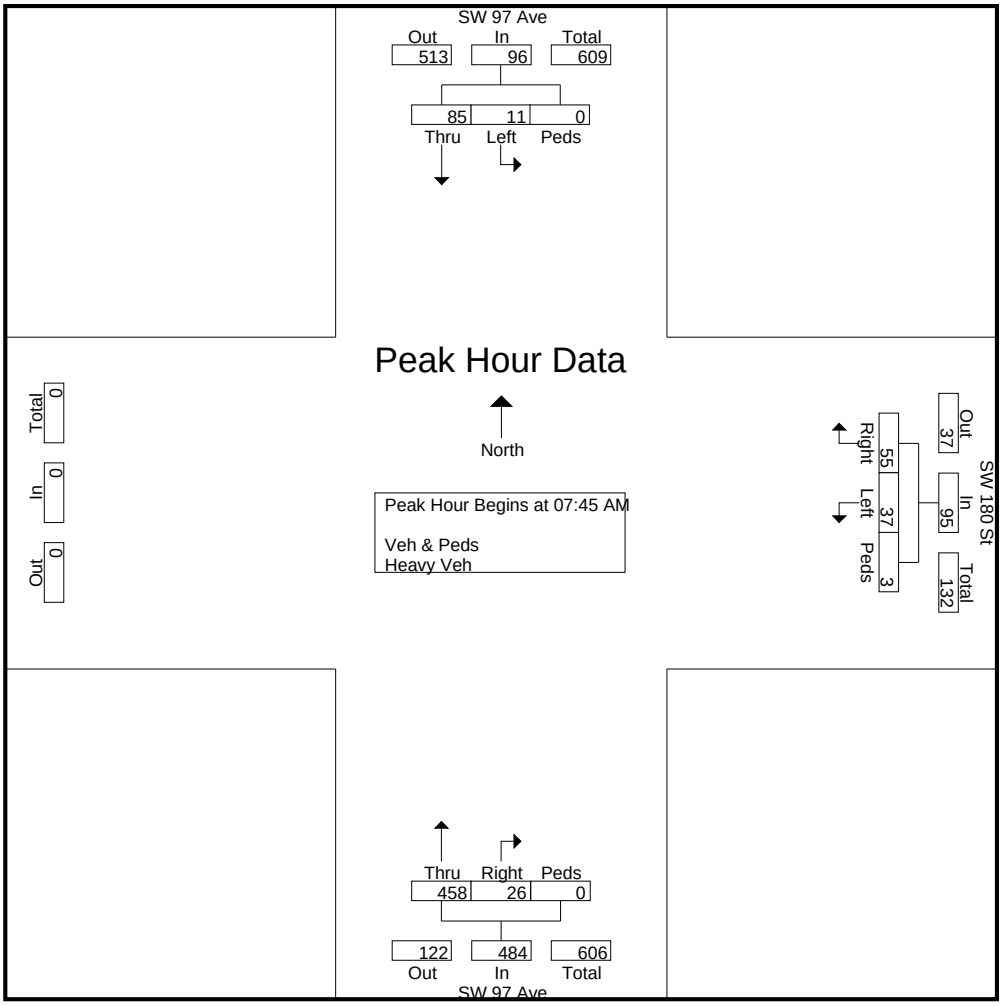

Marlin Engineering Inc.

2191 NW 97th Ave
Doral, FL 33172

Client: Village of Palmetto Bay
Job No.: 2013007.002
Project: DRTF Traffic Impact Analysis
County: Miami-Dade

File Name : SW 97 Ave @ SW 180 St
Site Code : 00000000
Start Date : 2/12/2014
Page No : 4

	SW 97 Ave Southbound				SW 180 St Westbound				SW 97 Ave Northbound				
Start Time	Thru	Left	Peds	App. Total	Right	Left	Peds	App. Total	Right	Thru	Peds	App. Total	Int. Total
Peak Hour Analysis From 11:00 AM to 12:45 PM - Peak 1 of 1													
Peak Hour for Entire Intersection Begins at 11:30 AM													
11:30 AM	24	1	0	25	**11**	**11**	**2**	**24**	**7**	**67**	0	**74**	123
11:45 AM	**37**	**8**	0	**45**	7	8	0	15	0	65	0	65	125
12:00 PM	31	8	0	39	8	11	0	19	2	67	0	69	**127**
12:15 PM	29	1	0	30	11	9	0	20	2	67	0	69	119
Total Volume	121	18	0	139	37	39	2	78	11	266	0	277	494
% App. Total	87.1	12.9	0		47.4	50	2.6		4	96	0		
PHF	.818	.563	.000	.772	.841	.886	.250	.813	.393	.993	.000	.936	.972

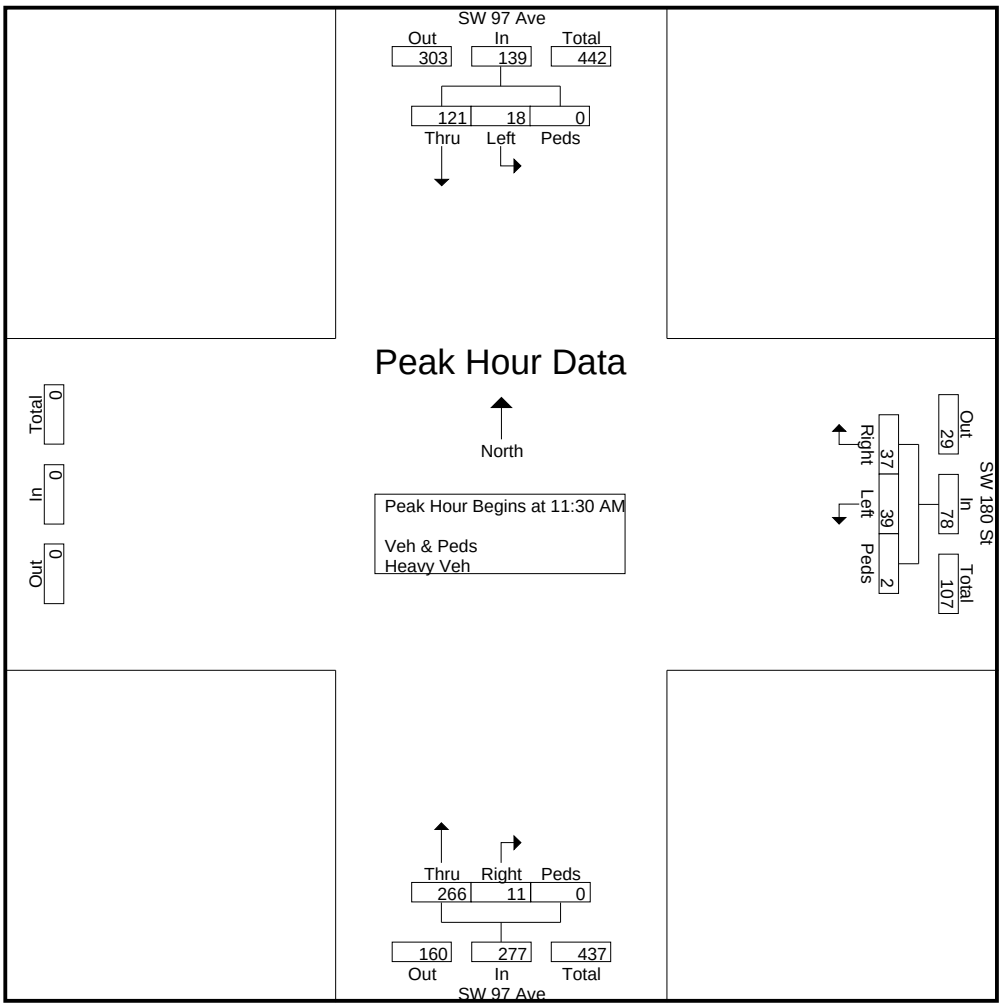

Marlin Engineering Inc.

2191 NW 97th Ave
Doral, FL 33172

Client: Village of Palmetto Bay
Job No.: 2013007.002
Project: DRTF Traffic Impact Analysis
County: Miami-Dade

File Name : SW 97 Ave @ SW 180 St
Site Code : 00000000
Start Date : 2/12/2014
Page No : 5

	SW 97 Ave Southbound				SW 180 St Westbound				SW 97 Ave Northbound				
Start Time	Thru	Left	Peds	App. Total	Right	Left	Peds	App. Total	Right	Thru	Peds	App. Total	Int. Total
Peak Hour Analysis From 04:00 PM to 05:45 PM - Peak 1 of 1													
Peak Hour for Entire Intersection Begins at 04:30 PM													
04:30 PM	54	4	0	58	**15**	12	**1**	28	5	**72**	0	**77**	163
04:45 PM	50	8	0	58	10	9	0	19	8	67	0	75	152
05:00 PM	**70**	5	0	**75**	11	**20**	0	**31**	**12**	53	0	65	**171**
05:15 PM	66	**9**	0	75	11	8	0	19	3	57	0	60	154
Total Volume	240	26	0	266	47	49	1	97	28	249	0	277	640
% App. Total	90.2	9.8	0		48.5	50.5	1		10.1	89.9	0		
PHF	.857	.722	.000	.887	.783	.613	.250	.782	.583	.865	.000	.899	.936

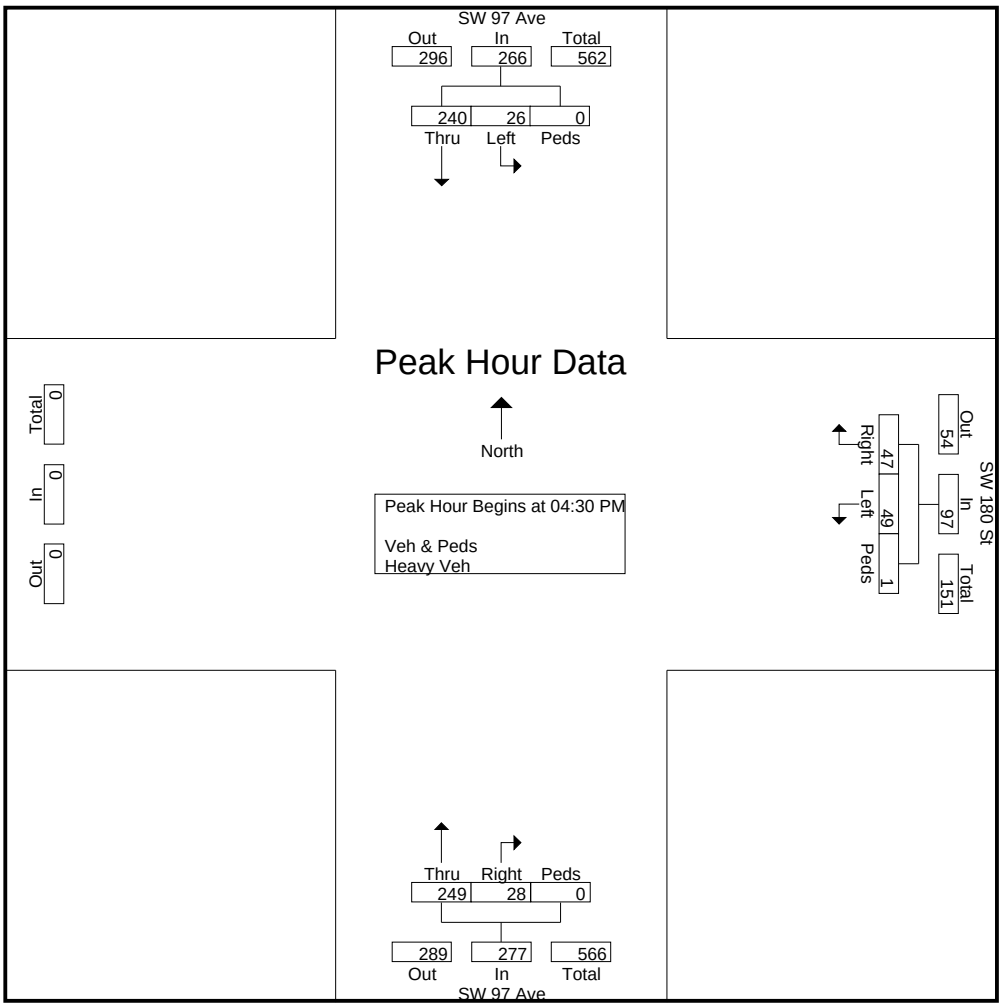

Marlin Engineering Inc.

2191 NW 97th Ave
Doral, FL 33172

Client: Village of Palmetto Bay
Job No.: 2013007.002
Project: DRTF Traffic Impact Analysis
County: Miami-Dade

File Name : SW 97 Ave @ Indigo St
Site Code : 00000000
Start Date : 2/12/2014
Page No : 1

Groups Printed- Veh & Peds - Heavy Veh

	SW 97 Ave Southbound				SW 97 Ave Northbound				Indigo St Eastbound				
Start Time	Right	Thru	Peds	App. Total	Thru	Left	Peds	App. Total	Right	Left	Peds	App. Total	Int. Total
07:00 AM	0	3	0	3	93	1	0	94	0	1	0	1	98
07:15 AM	1	8	0	9	93	1	0	94	10	2	0	12	115
07:30 AM	1	17	0	18	93	6	0	99	4	0	0	4	121
07:45 AM	0	22	0	22	128	4	0	132	9	3	0	12	166
Total	2	50	0	52	407	12	0	419	23	6	0	29	500
08:00 AM	0	29	0	29	132	2	0	134	4	1	0	5	168
08:15 AM	0	31	0	31	138	6	0	144	6	1	0	7	182
08:30 AM	0	40	0	40	139	3	0	142	2	0	0	2	184
08:45 AM	0	18	0	18	100	5	0	105	4	0	0	4	127
Total	0	118	0	118	509	16	0	525	16	2	0	18	661
*** BREAK ***													
11:00 AM	0	24	1	25	76	4	0	80	6	2	0	8	113
11:15 AM	1	28	0	29	54	1	0	55	3	0	0	3	87
11:30 AM	1	36	0	37	67	0	0	67	7	2	0	9	113
11:45 AM	0	39	0	39	78	2	0	80	5	3	0	8	127
Total	2	127	1	130	275	7	0	282	21	7	0	28	440
12:00 PM	0	43	0	43	79	2	0	81	8	1	0	9	133
12:15 PM	1	40	0	41	77	2	0	79	3	3	0	6	126
12:30 PM	1	25	0	26	63	6	0	69	2	4	0	6	101
12:45 PM	0	29	0	29	60	4	0	64	1	0	0	1	94
Total	2	137	0	139	279	14	0	293	14	8	0	22	454
*** BREAK ***													
04:00 PM	4	45	0	49	66	2	0	68	7	1	0	8	125
04:15 PM	0	49	0	49	66	2	0	68	16	1	0	17	134
04:30 PM	2	66	0	68	78	3	0	81	17	2	0	19	168
04:45 PM	0	74	0	74	84	4	0	88	9	0	0	9	171
Total	6	234	0	240	294	11	0	305	49	4	0	53	598
05:00 PM	0	77	0	77	86	3	0	89	9	0	0	9	175
05:15 PM	2	68	0	70	84	4	0	88	11	3	0	14	172
05:30 PM	1	56	0	57	75	5	0	80	22	2	0	24	161
05:45 PM	0	49	0	49	63	5	0	68	15	0	0	15	132
Total	3	250	0	253	308	17	0	325	57	5	0	62	640
Grand Total	15	916	1	932	2072	77	0	2149	180	32	0	212	3293
Apprch %	1.6	98.3	0.1		96.4	3.6	0		84.9	15.1	0		
Total %	0.5	27.8	0	28.3	62.9	2.3	0	65.3	5.5	1	0	6.4	
Veh & Peds	15	891	1	907	2023	77	0	2100	179	32	0	211	3218
% Veh & Peds	100	97.3	100	97.3	97.6	100	0	97.7	99.4	100	0	99.5	97.7
Heavy Veh	0	25	0	25	49	0	0	49	1	0	0	1	75
% Heavy Veh	0	2.7	0	2.7	2.4	0	0	2.3	0.6	0	0	0.5	2.3

Marlin Engineering Inc.

2191 NW 97th Ave
Doral, FL 33172

Client: Village of Palmetto Bay
Job No.: 2013007.002
Project: DRTF Traffic Impact Analysis
County: Miami-Dade

File Name : SW 97 Ave @ Indigo St
Site Code : 00000000
Start Date : 2/12/2014
Page No : 2

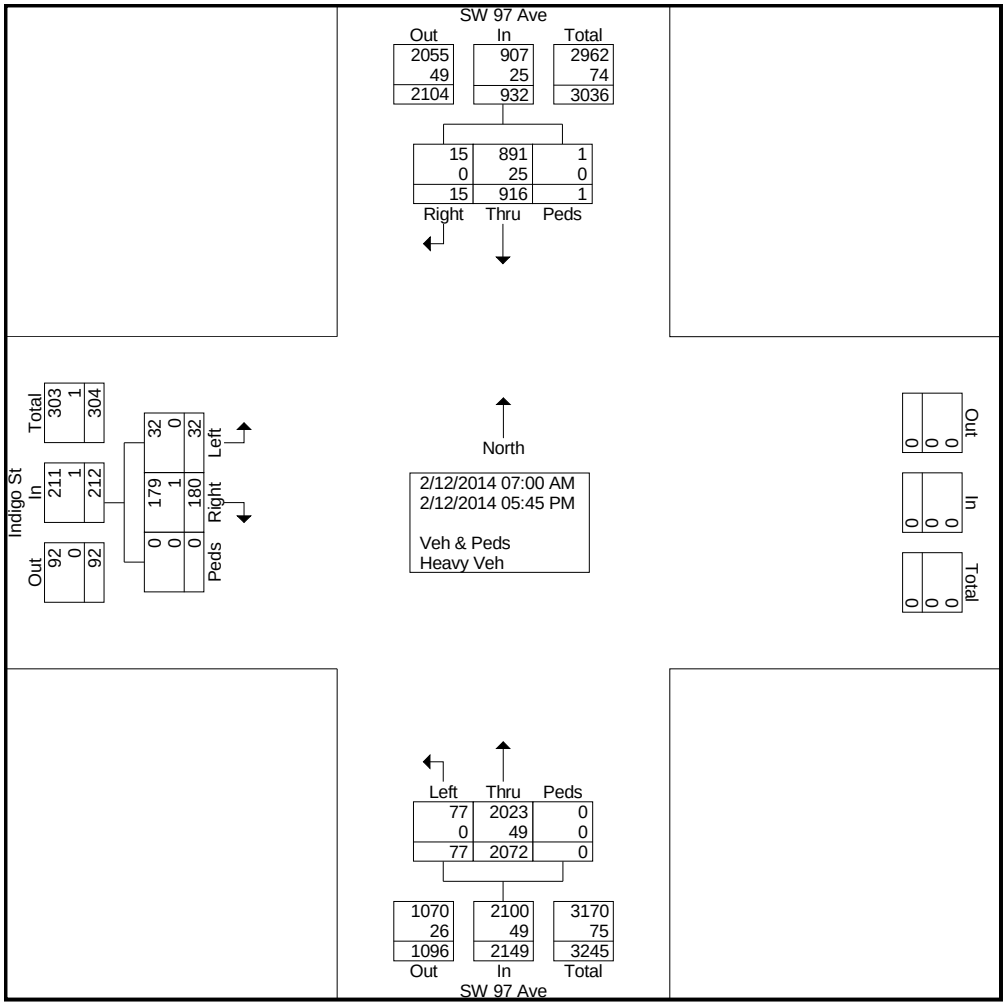

Marlin Engineering Inc.

2191 NW 97th Ave
Doral, FL 33172

Client: Village of Palmetto Bay
Job No.: 2013007.002
Project: DRTF Traffic Impact Analysis
County: Miami-Dade

File Name : SW 97 Ave @ Indigo St
Site Code : 00000000
Start Date : 2/12/2014
Page No : 3

	SW 97 Ave Southbound				SW 97 Ave Northbound				Indigo St Eastbound				
Start Time	Right	Thru	Peds	App. Total	Thru	Left	Peds	App. Total	Right	Left	Peds	App. Total	Int. Total
Peak Hour Analysis From 07:00 AM to 08:45 AM - Peak 1 of 1													
Peak Hour for Entire Intersection Begins at 07:45 AM													
07:45 AM	0	22	0	22	128	4	0	132	**9**	**3**	0	**12**	166
08:00 AM	0	29	0	29	132	2	0	134	4	1	0	5	168
08:15 AM	0	31	0	31	138	**6**	0	**144**	6	1	0	7	182
08:30 AM	0	**40**	0	**40**	**139**	3	0	142	2	0	0	2	**184**
Total Volume	0	122	0	122	537	15	0	552	21	5	0	26	700
% App. Total	0	100	0		97.3	2.7	0		80.8	19.2	0		
PHF	.000	.763	.000	.763	.966	.625	.000	.958	.583	.417	.000	.542	.951

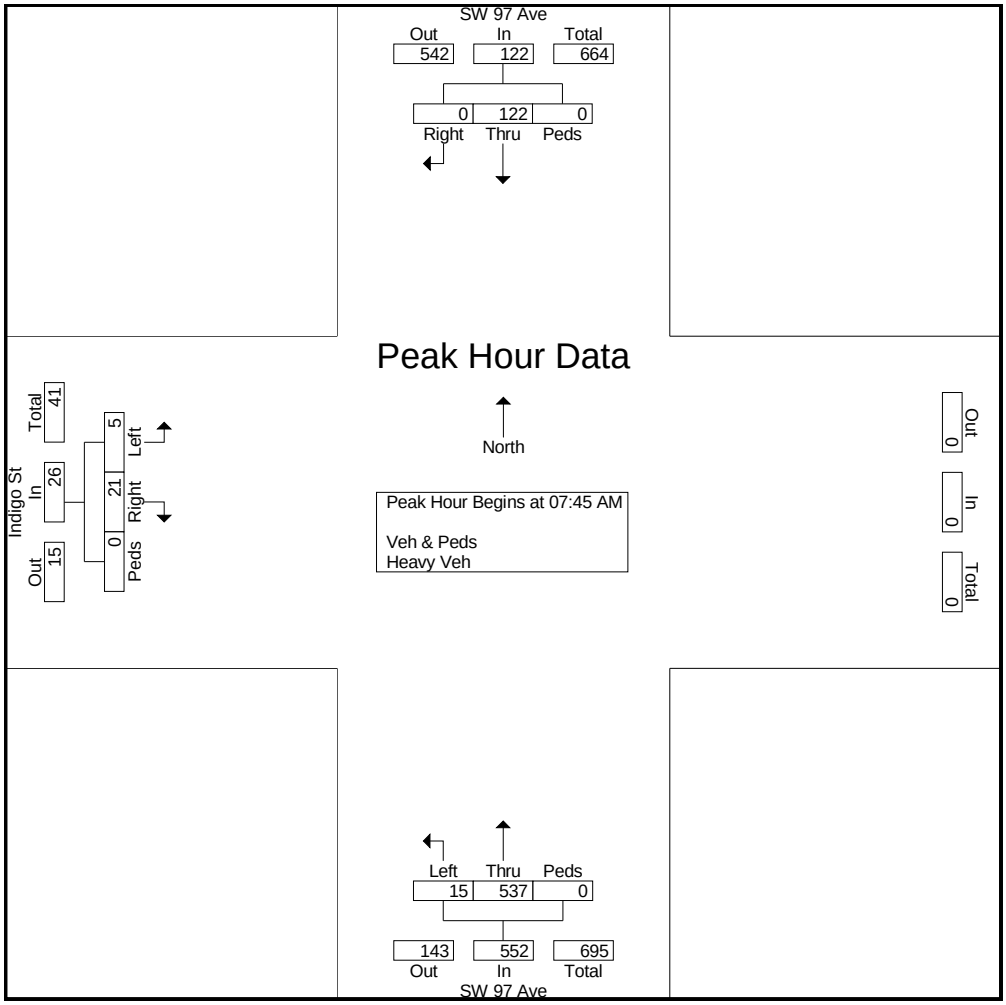

Marlin Engineering Inc.

2191 NW 97th Ave
Doral, FL 33172

Client: Village of Palmetto Bay
Job No.: 2013007.002
Project: DRTF Traffic Impact Analysis
County: Miami-Dade

File Name : SW 97 Ave @ Indigo St
Site Code : 00000000
Start Date : 2/12/2014
Page No : 4

	SW 97 Ave Southbound				SW 97 Ave Northbound				Indigo St Eastbound				
Start Time	Right	Thru	Peds	App. Total	Thru	Left	Peds	App. Total	Right	Left	Peds	App. Total	Int. Total
Peak Hour Analysis From 11:00 AM to 12:45 PM - Peak 1 of 1													
Peak Hour for Entire Intersection Begins at 11:30 AM													
11:30 AM	**1**	36	0	37	67	0	0	67	7	2	0	**9**	113
11:45 AM	0	39	0	39	78	**2**	0	80	5	**3**	0	8	127
12:00 PM	0	**43**	0	**43**	**79**	2	0	**81**	**8**	1	0	9	**133**
12:15 PM	1	40	0	41	77	2	0	79	3	3	0	6	126
Total Volume	2	158	0	160	301	6	0	307	23	9	0	32	499
% App. Total	1.2	98.8	0		98	2	0		71.9	28.1	0		
PHF	.500	.919	.000	.930	.953	.750	.000	.948	.719	.750	.000	.889	.938

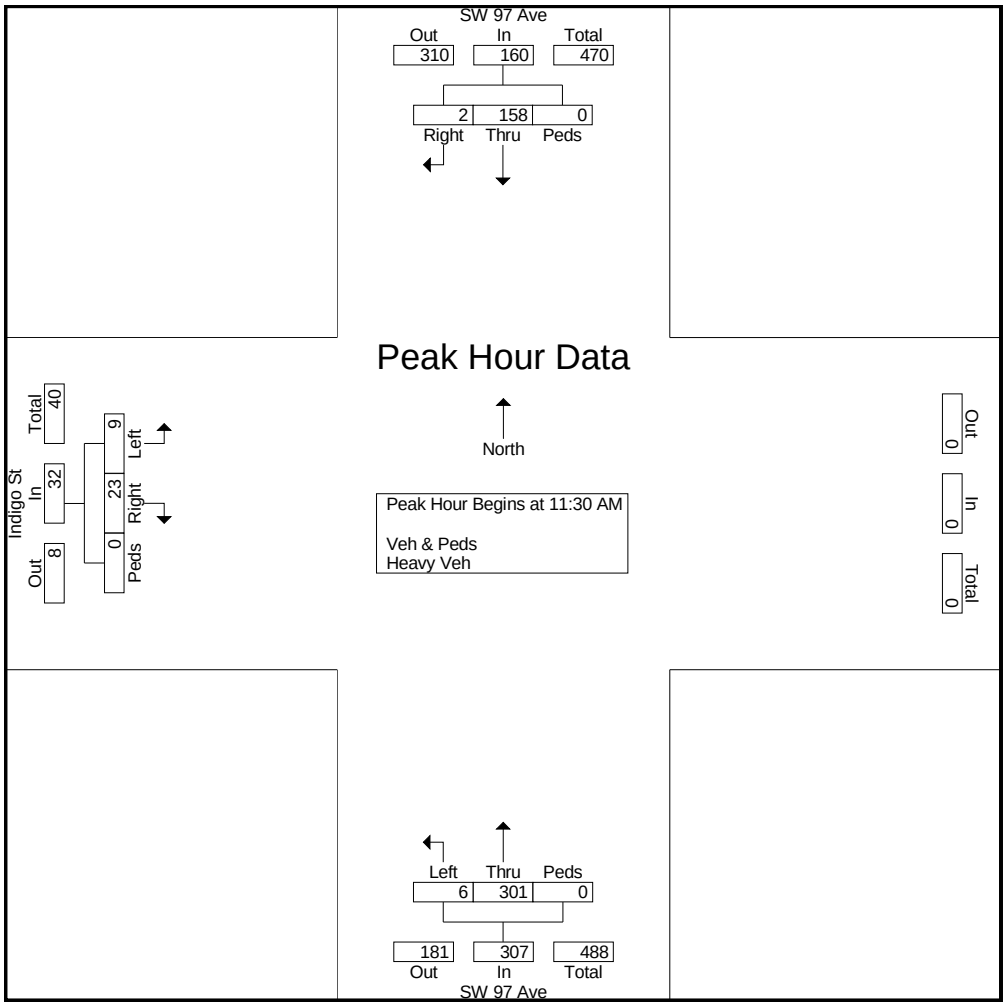

Marlin Engineering Inc.

2191 NW 97th Ave
Doral, FL 33172

Client: Village of Palmetto Bay
Job No.: 2013007.002
Project: DRTF Traffic Impact Analysis
County: Miami-Dade

File Name : SW 97 Ave @ Indigo St
Site Code : 00000000
Start Date : 2/12/2014
Page No : 5

	SW 97 Ave Southbound				SW 97 Ave Northbound				Indigo St Eastbound				
Start Time	Right	Thru	Peds	App. Total	Thru	Left	Peds	App. Total	Right	Left	Peds	App. Total	Int. Total
Peak Hour Analysis From 04:00 PM to 05:45 PM - Peak 1 of 1													
Peak Hour for Entire Intersection Begins at 04:30 PM													
04:30 PM	**2**	66	0	68	78	3	0	81	**17**	2	0	**19**	168
04:45 PM	0	74	0	74	84	**4**	0	88	9	0	0	9	171
05:00 PM	0	**77**	0	**77**	**86**	3	0	**89**	9	0	0	9	**175**
05:15 PM	2	68	0	70	84	4	0	88	11	**3**	0	14	172
Total Volume	4	285	0	289	332	14	0	346	46	5	0	51	686
% App. Total	1.4	98.6	0		96	4	0		90.2	9.8	0		
PHF	.500	.925	.000	.938	.965	.875	.000	.972	.676	.417	.000	.671	.980

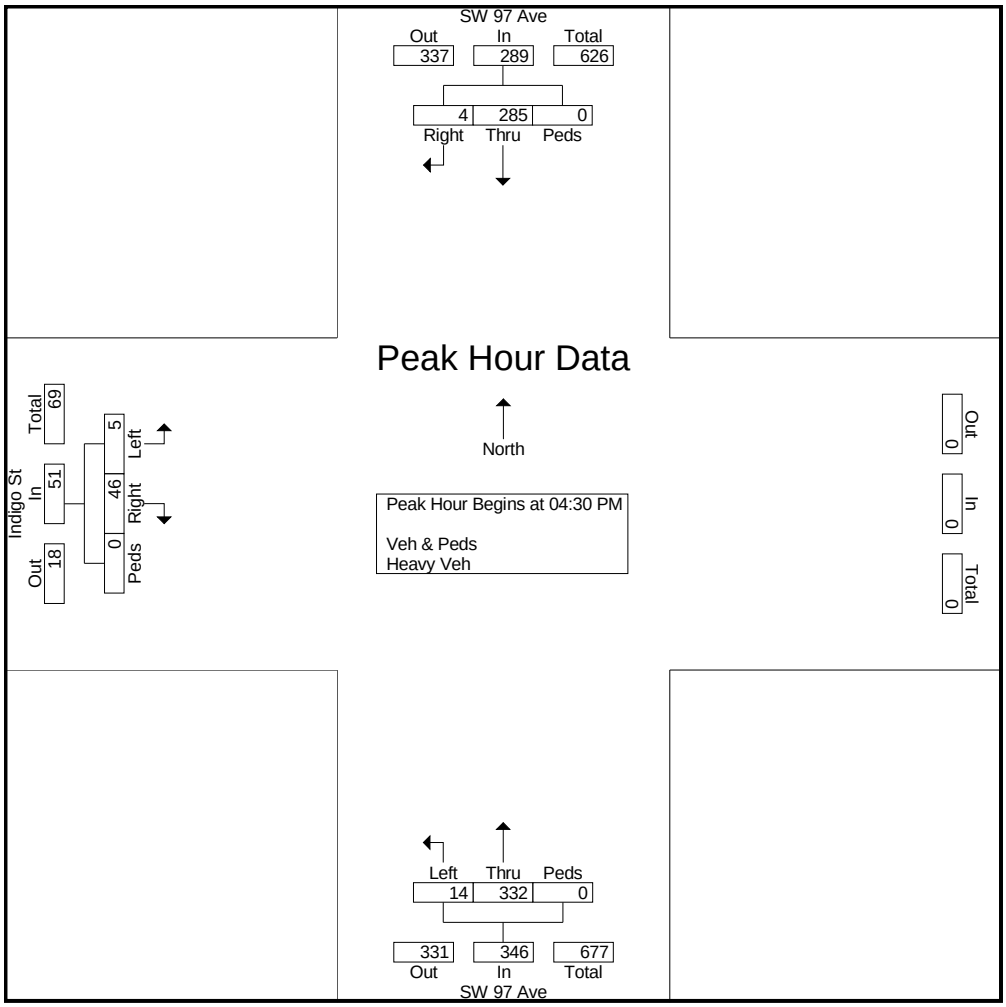

Marlin Engineering Inc.

2191 NW 97th Ave
Doral, FL 33172

Client: Village of Palmetto Bay
Job No.: 2013007.002
Project: DRTF Traffic Impact Analysis
County: Miami-Dade

File Name : SW 97 Ave @ SW 181 Ter
Site Code : 00000000
Start Date : 2/11/2014
Page No : 1

Groups Printed- Veh & Peds - Heavy Veh

	SW 97 Ave Southbound					SW 181 Ter Westbound					SW 97 Ave Northbound					SW 181 Ter Eastbound					
Start Time	Right	Thru	Left	Peds	App. Total	Right	Thru	Left	Peds	App. Total	Right	Thru	Left	Peds	App. Total	Right	Thru	Left	Peds	App. Total	Int. Total
07:00 AM	1	14	0	0	15	0	0	0	0	0	3	109	2	0	114	1	0	0	0	1	130
07:15 AM	0	20	0	0	20	0	3	1	0	4	2	102	1	0	105	1	0	0	0	1	130
07:30 AM	0	13	1	0	14	3	0	4	0	7	3	107	1	1	112	5	3	1	0	9	142
07:45 AM	2	28	3	0	33	8	2	0	0	10	0	133	2	0	135	3	1	2	0	6	184
Total	3	75	4	0	82	11	5	5	0	21	8	451	6	1	466	10	4	3	0	17	586
08:00 AM	1	39	3	0	43	13	1	1	0	15	0	135	1	0	136	1	0	4	0	5	199
08:15 AM	0	39	2	0	41	6	3	2	0	11	0	104	5	0	109	3	2	3	0	8	169
08:30 AM	3	34	0	1	38	3	2	2	0	7	0	139	2	2	143	0	0	2	0	2	190
08:45 AM	3	27	0	0	30	5	1	0	0	6	0	111	1	1	113	2	1	1	0	4	153
Total	7	139	5	1	152	27	7	5	0	39	0	489	9	3	501	6	3	10	0	19	711
*** BREAK ***																					
11:00 AM	0	39	2	0	41	1	0	1	0	2	0	70	0	0	70	4	0	0	1	5	118
11:15 AM	2	43	4	0	49	2	1	1	1	5	1	81	0	0	82	3	0	1	0	4	140
11:30 AM	0	47	1	0	48	1	3	0	0	4	1	69	0	0	70	1	1	1	0	3	125
11:45 AM	1	62	0	0	63	1	1	0	1	3	1	78	1	0	80	0	0	0	0	0	146
Total	3	191	7	0	201	5	5	2	2	14	3	298	1	0	302	8	1	2	1	12	529
12:00 PM	1	39	0	0	40	0	0	0	0	0	3	71	3	0	77	3	0	0	0	3	120
12:15 PM	2	51	1	0	54	2	0	0	0	2	0	83	1	0	84	3	0	1	0	4	144
12:30 PM	2	49	1	0	52	0	1	0	0	1	1	71	0	1	73	0	0	0	0	0	126
12:45 PM	1	45	3	0	49	1	0	1	0	2	0	63	0	3	66	0	0	2	0	2	119
Total	6	184	5	0	195	3	1	1	0	5	4	288	4	4	300	6	0	3	0	9	509
*** BREAK ***																					
04:00 PM	1	80	1	0	82	3	0	0	0	3	0	88	2	0	90	0	1	2	0	3	178
04:15 PM	2	68	2	0	72	1	1	1	2	5	0	104	2	0	106	0	1	3	0	4	187
04:30 PM	3	80	1	0	84	1	0	1	0	2	1	91	1	0	93	6	2	1	0	9	188
04:45 PM	1	66	1	1	69	3	0	3	0	6	0	80	1	0	81	5	0	1	0	6	162
Total	7	294	5	1	307	8	1	5	2	16	1	363	6	0	370	11	4	7	0	22	715
05:00 PM	2	124	1	0	127	6	0	1	2	9	1	72	1	0	74	9	1	3	0	13	223
05:15 PM	1	97	1	2	101	2	1	2	0	5	0	86	1	0	87	6	1	0	0	7	200
05:30 PM	0	100	0	0	100	4	0	0	0	4	1	72	2	0	75	4	0	1	0	5	184
05:45 PM	1	70	1	0	72	2	1	0	0	3	1	81	2	0	84	4	1	1	0	6	165
Total	4	391	3	2	400	14	2	3	2	21	3	311	6	0	320	23	3	5	0	31	772
Grand Total	30	1274	29	4	1337	68	21	21	6	116	19	2200	32	8	2259	64	15	30	1	110	3822
Apprch %	2.2	95.3	2.2	0.3		58.6	18.1	18.1	5.2		0.8	97.4	1.4	0.4		58.2	13.6	27.3	0.9		
Total %	0.8	33.3	0.8	0.1	35	1.8	0.5	0.5	0.2	3	0.5	57.6	0.8	0.2	59.1	1.7	0.4	0.8	0	2.9	
Veh & Peds	29	1259	28	4	1320	65	21	21	6	113	18	2183	32	8	2241	64	15	30	1	110	3784
% Veh & Peds	96.7	98.8	96.6	100	98.7	95.6	100	100	100	97.4	94.7	99.2	100	100	99.2	100	100	100	100	100	99
Heavy Veh	1	15	1	0	17	3	0	0	0	3	1	17	0	0	18	0	0	0	0	0	38
% Heavy Veh	3.3	1.2	3.4	0	1.3	4.4	0	0	0	2.6	5.3	0.8	0	0	0.8	0	0	0	0	0	1

Marlin Engineering Inc.

2191 NW 97th Ave
Doral, FL 33172

Client: Village of Palmetto Bay
Job No.: 2013007.002
Project: DRTF Traffic Impact Analysis
County: Miami-Dade

File Name : SW 97 Ave @ SW 181 Ter
Site Code : 00000000
Start Date : 2/11/2014
Page No : 2

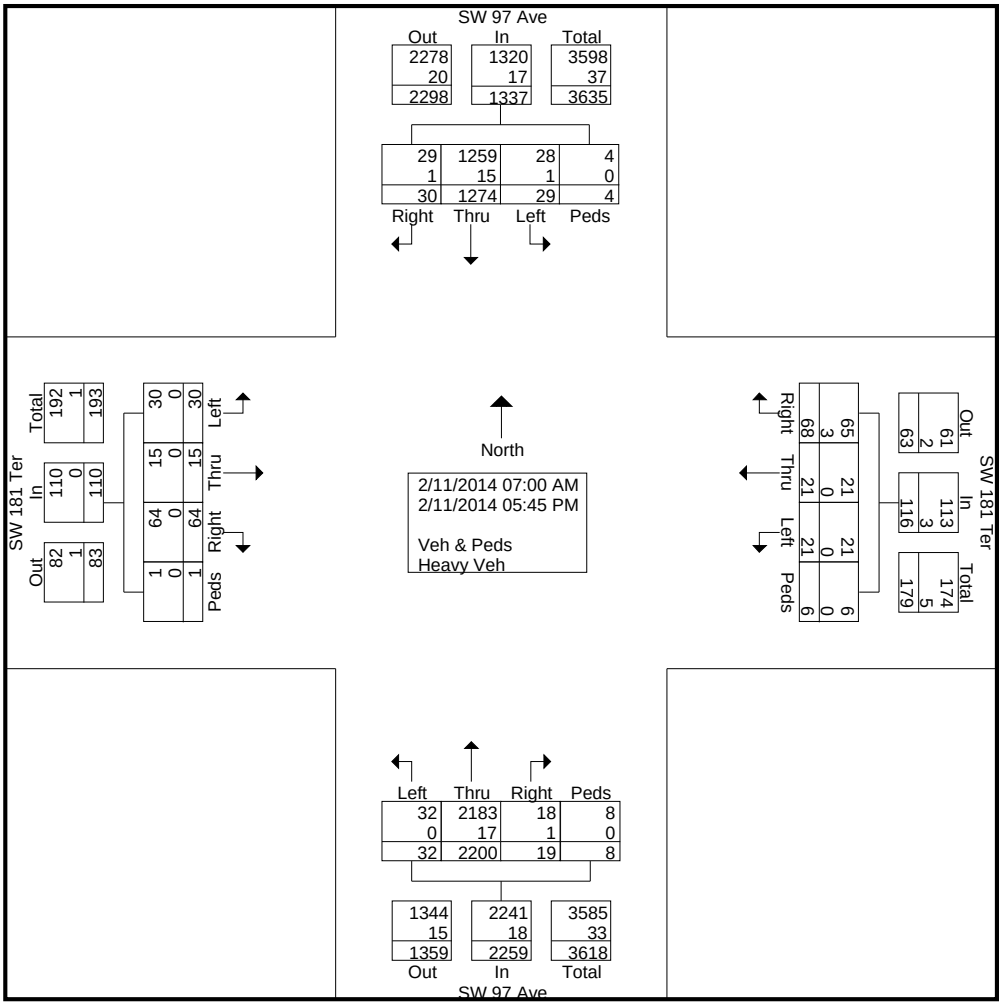

Marlin Engineering Inc.

2191 NW 97th Ave
Doral, FL 33172

Client: Village of Palmetto Bay
Job No.: 2013007.002
Project: DRTF Traffic Impact Analysis
County: Miami-Dade

File Name : SW 97 Ave @ SW 181 Ter
Site Code : 00000000
Start Date : 2/11/2014
Page No : 3

	SW 97 Ave Southbound					SW 181 Ter Westbound					SW 97 Ave Northbound					SW 181 Ter Eastbound					
Start Time	Right	Thru	Left	Peds	App. Total	Right	Thru	Left	Peds	App. Total	Right	Thru	Left	Peds	App. Total	Right	Thru	Left	Peds	App. Total	Int. Total
Peak Hour Analysis From 07:00 AM to 08:45 AM - Peak 1 of 1																					
Peak Hour for Entire Intersection Begins at 07:45 AM																					
07:45 AM	2	28	**3**	0	33	8	2	0	0	10	0	133	2	0	135	**3**	1	2	0	6	184
08:00 AM	1	**39**	3	0	**43**	**13**	1	1	0	**15**	0	135	1	0	136	1	0	**4**	0	5	**199**
08:15 AM	0	39	2	0	41	6	**3**	**2**	0	11	0	104	**5**	0	109	3	**2**	3	0	**8**	169
08:30 AM	**3**	34	0	**1**	38	3	2	2	0	7	0	**139**	2	**2**	**143**	0	0	2	0	2	190
Total Volume	6	140	8	1	155	30	8	5	0	43	0	511	10	2	523	7	3	11	0	21	742
% App. Total																					
PHF	.500	.897	.667	.250	.901	.577	.667	.625	.000	.717	.000	.919	.500	.250	.914	.583	.375	.688	.000	.656	.932

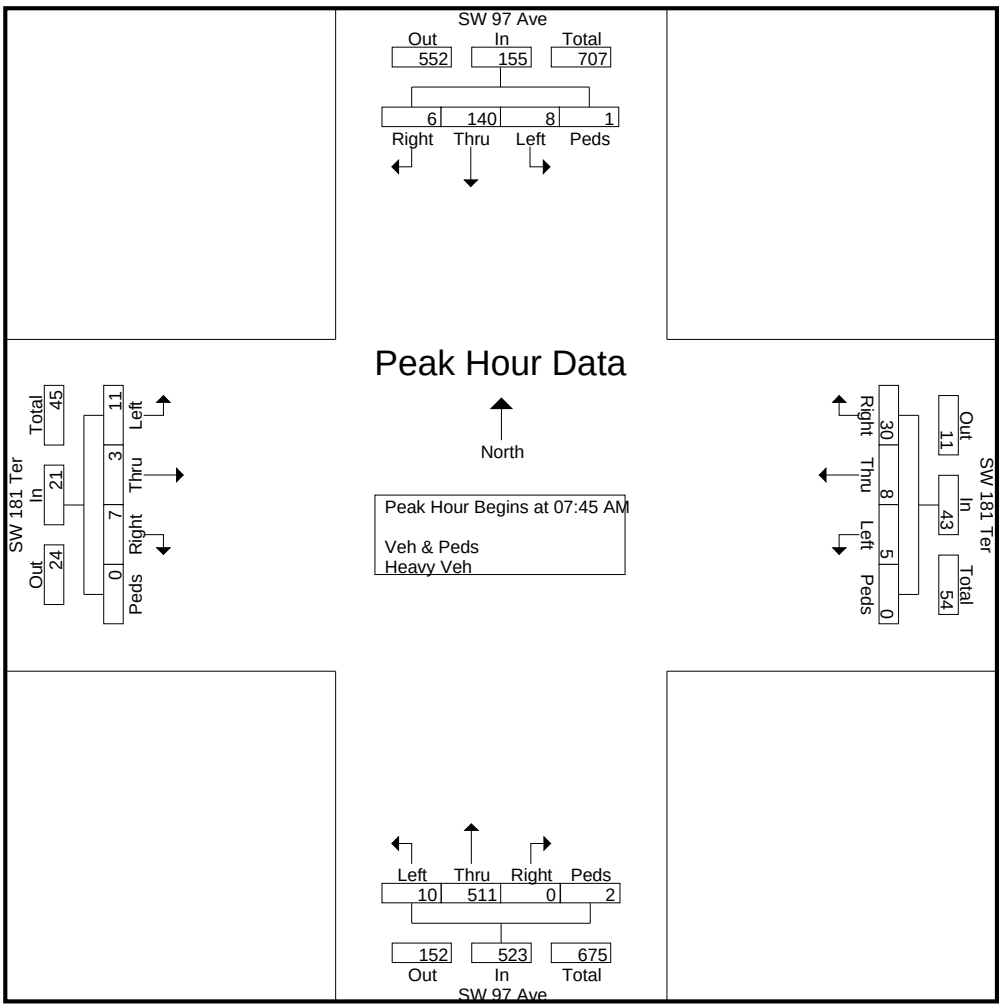

Marlin Engineering Inc.

2191 NW 97th Ave
Doral, FL 33172

Client: Village of Palmetto Bay
Job No.: 2013007.002
Project: DRTF Traffic Impact Analysis
County: Miami-Dade

File Name : SW 97 Ave @ SW 181 Ter
Site Code : 00000000
Start Date : 2/11/2014
Page No : 4

	SW 97 Ave Southbound					SW 181 Ter Westbound					SW 97 Ave Northbound					SW 181 Ter Eastbound					
Start Time	Right	Thru	Left	Peds	App. Total	Right	Thru	Left	Peds	App. Total	Right	Thru	Left	Peds	App. Total	Right	Thru	Left	Peds	App. Total	Int. Total
Peak Hour Analysis From 11:00 AM to 12:45 PM - Peak 1 of 1																					
Peak Hour for Entire Intersection Begins at 11:45 AM																					
11:45 AM	1	**62**	0	0	**63**	1	**1**	0	**1**	**3**	1	78	1	0	80	0	0	0	0	0	**146**
12:00 PM	1	39	0	0	40	0	0	0	0	0	**3**	71	**3**	0	77	**3**	0	0	0	3	120
12:15 PM	**2**	51	**1**	0	54	**2**	0	0	0	2	0	**83**	1	0	**84**	3	0	**1**	0	**4**	144
12:30 PM	2	49	1	0	52	0	1	0	0	1	1	71	0	**1**	73	0	0	0	0	0	126
Total Volume	6	201	2	0	209	3	2	0	1	6	5	303	5	1	314	6	0	1	0	7	536
% App. Total																					
PHF	.750	.810	.500	.000	.829	.375	.500	.000	.250	.500	.417	.913	.417	.250	.935	.500	.000	.250	.000	.438	.918

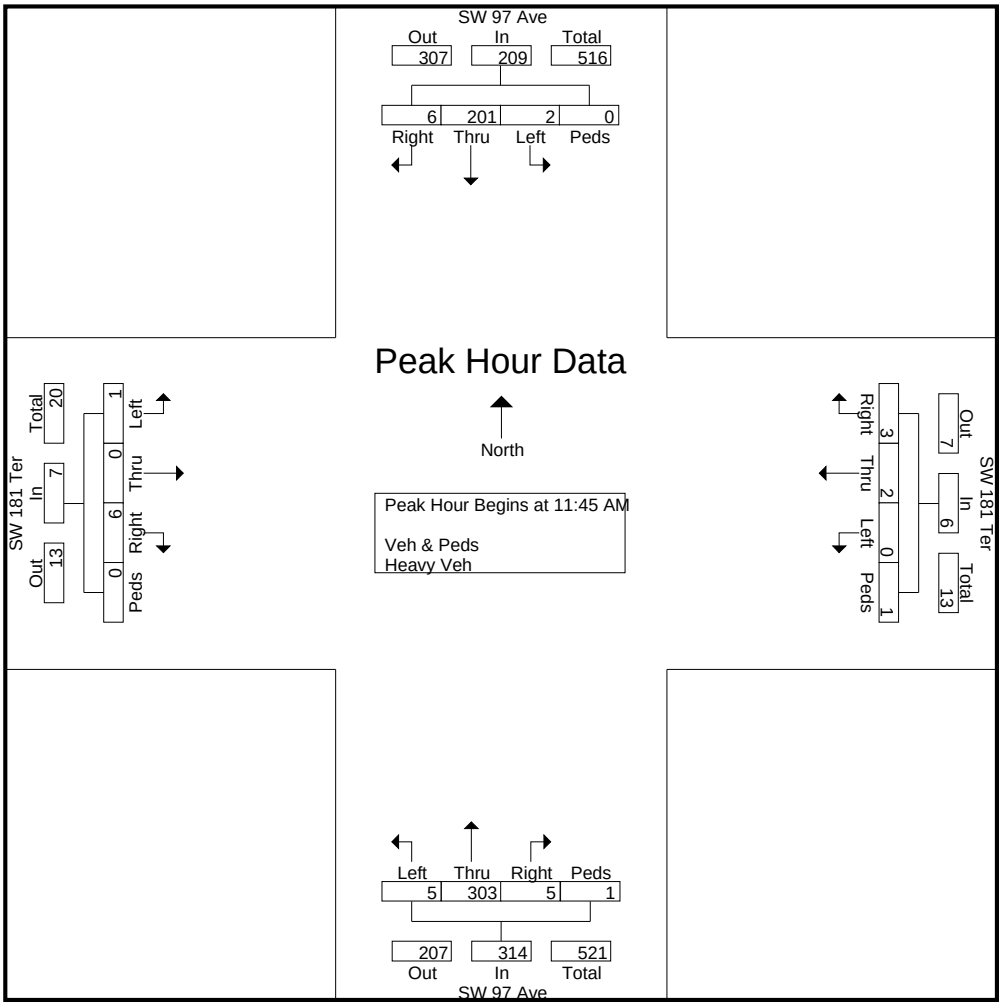

Marlin Engineering Inc.

2191 NW 97th Ave
Doral, FL 33172

Client: Village of Palmetto Bay
Job No.: 2013007.002
Project: DRTF Traffic Impact Analysis
County: Miami-Dade

File Name : SW 97 Ave @ SW 181 Ter
Site Code : 00000000
Start Date : 2/11/2014
Page No : 5

	SW 97 Ave Southbound					SW 181 Ter Westbound					SW 97 Ave Northbound					SW 181 Ter Eastbound					
Start Time	Right	Thru	Left	Peds	App. Total	Right	Thru	Left	Peds	App. Total	Right	Thru	Left	Peds	App. Total	Right	Thru	Left	Peds	App. Total	Int. Total
Peak Hour Analysis From 04:00 PM to 05:45 PM - Peak 1 of 1																					
Peak Hour for Entire Intersection Begins at 04:30 PM																					
04:30 PM	**3**	80	**1**	0	84	1	0	1	0	2	**1**	**91**	**1**	0	**93**	6	**2**	1	0	9	188
04:45 PM	1	66	1	1	69	3	0	**3**	0	6	0	80	1	0	81	5	0	1	0	6	162
05:00 PM	2	**124**	1	0	**127**	**6**	0	1	**2**	**9**	1	72	1	0	74	**9**	1	**3**	0	**13**	**223**
05:15 PM	1	97	1	**2**	101	2	**1**	2	0	5	0	86	1	0	87	6	1	0	0	7	200
Total Volume	7	367	4	3	381	12	1	7	2	22	2	329	4	0	335	26	4	5	0	35	773
% App. Total																					
PHF	.583	.740	1.00	.375	.750	.500	.250	.583	.250	.611	.500	.904	1.00	.000	.901	.722	.500	.417	.000	.673	.867

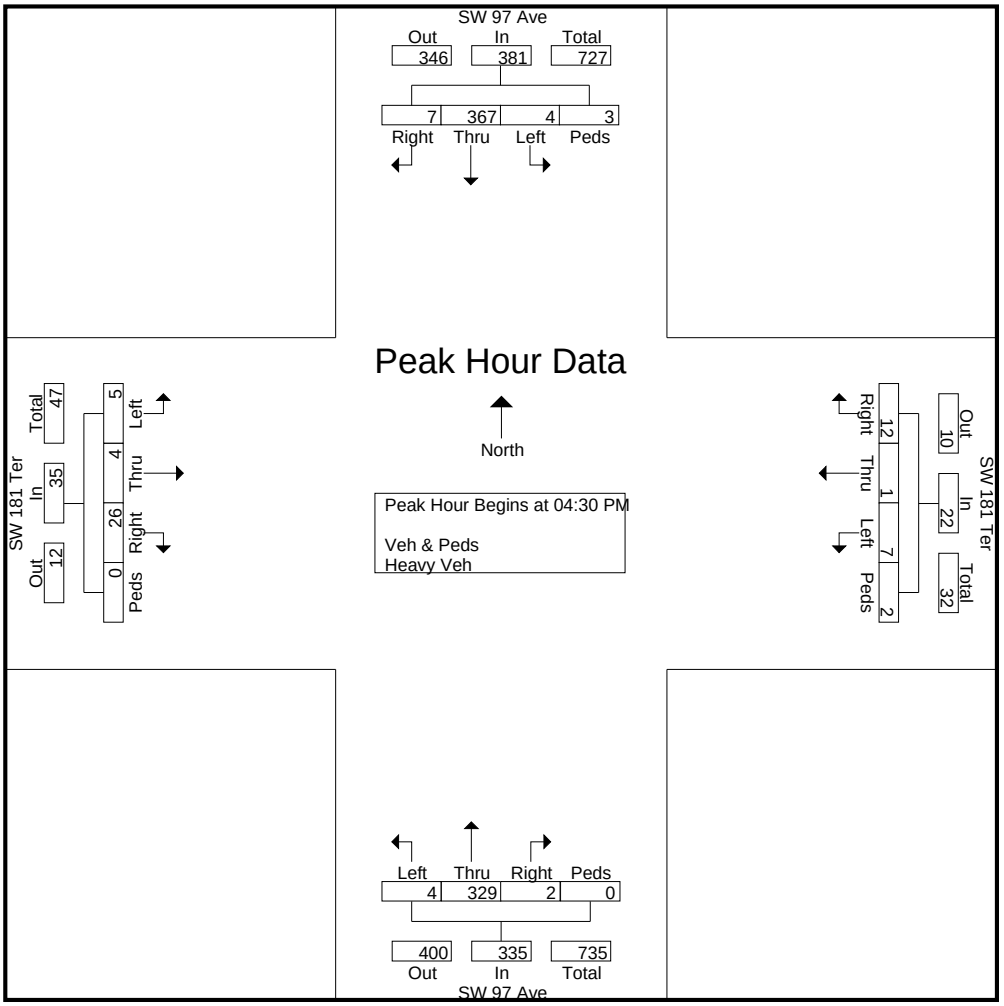

Marlin Engineering Inc.

2191 NW 97th Ave
Doral, FL 33172

Client: Village of Palmetto Bay
Job No.: 2013007.002
Project: DRTF Traffic Impact Analysis
County: Miami-Dade

File Name : SW 97 Ave @ SW 182 St
Site Code : 00000000
Start Date : 2/11/2014
Page No : 1

Groups Printed- Veh & Peds - Heavy Veh

	SW 97 Ave Southbound					SW 182 St Westbound					SW 97 Ave Northbound					SW 182 St Eastbound					
Start Time	Right	Thru	Left	Peds	App. Total	Right	Thru	Left	Peds	App. Total	Right	Thru	Left	Peds	App. Total	Right	Thru	Left	Peds	App. Total	Int. Total
07:00 AM	0	15	0	0	15	1	1	0	0	2	0	103	0	0	103	1	1	1	0	3	123
07:15 AM	0	23	0	0	23	0	0	1	0	1	0	112	1	0	113	0	0	0	0	0	137
07:30 AM	0	20	1	0	21	1	0	0	0	1	1	111	1	0	113	0	1	2	0	3	138
07:45 AM	2	28	0	0	30	2	1	0	0	3	0	133	1	0	134	0	0	1	0	1	168
Total	2	86	1	0	89	4	2	1	0	7	1	459	3	0	463	1	2	4	0	7	566
08:00 AM	2	39	0	0	41	0	1	0	0	1	1	135	0	0	136	1	0	0	0	1	179
08:15 AM	1	38	1	0	40	0	2	1	0	3	0	111	0	0	111	0	1	2	0	3	157
08:30 AM	0	37	0	0	37	1	0	0	4	5	1	140	1	3	145	1	0	2	0	3	190
08:45 AM	0	31	0	1	32	0	0	1	0	1	0	115	1	0	116	0	0	0	0	0	149
Total	3	145	1	1	150	1	3	2	4	10	2	501	2	3	508	2	1	4	0	7	675
*** BREAK ***																					
10:45 AM	0	0	0	0	0	0	0	0	0	0	0	5	0	0	5	0	0	0	0	0	5
Total	0	0	0	0	0	0	0	0	0	0	0	5	0	0	5	0	0	0	0	0	5
11:00 AM	0	42	0	0	42	0	0	0	0	0	0	63	0	0	63	0	0	0	1	1	106
11:15 AM	1	47	0	1	49	0	0	0	0	0	0	82	0	0	82	0	0	1	0	1	132
11:30 AM	1	49	0	0	50	1	0	0	1	2	0	70	0	0	70	0	0	0	0	0	122
11:45 AM	2	59	0	0	61	0	1	0	0	1	0	77	1	0	78	1	0	0	0	1	141
Total	4	197	0	1	202	1	1	0	1	3	0	292	1	0	293	1	0	1	1	3	501
12:00 PM	0	55	0	0	55	1	0	0	0	1	1	68	1	0	70	0	0	0	0	0	126
12:15 PM	0	43	0	0	43	0	0	0	0	0	0	85	0	0	85	0	0	0	0	0	128
12:30 PM	0	54	1	0	55	1	0	1	0	2	0	81	0	0	81	1	0	0	1	2	140
12:45 PM	0	46	0	0	46	0	0	0	1	1	1	70	1	0	72	0	0	0	0	0	119
Total	0	198	1	0	199	2	0	1	1	4	2	304	2	0	308	1	0	0	1	2	513
*** BREAK ***																					
04:00 PM	1	81	0	0	82	0	0	2	0	2	0	88	0	1	89	0	0	1	0	1	174
04:15 PM	0	70	0	1	71	1	1	0	0	2	1	105	1	0	107	0	0	0	0	0	180
04:30 PM	0	88	1	0	89	0	0	0	0	0	0	99	0	0	99	0	0	0	1	1	189
04:45 PM	0	74	0	0	74	0	0	0	0	0	0	81	0	0	81	1	0	0	0	1	156
Total	1	313	1	1	316	1	1	2	0	4	1	373	1	1	376	1	0	1	1	3	699
05:00 PM	2	129	1	0	132	0	0	0	0	0	0	74	0	0	74	0	0	1	0	1	207
05:15 PM	0	108	0	0	108	0	0	0	0	0	0	92	1	0	93	1	0	0	1	2	203
05:30 PM	0	101	0	0	101	1	0	0	0	1	0	73	0	0	73	0	1	0	0	1	176
05:45 PM	0	76	1	0	77	0	0	1	0	1	0	84	0	0	84	0	0	0	0	0	162
Total	2	414	2	0	418	1	0	1	0	2	0	323	1	0	324	1	1	1	1	4	748
Grand Total	12	1353	6	3	1374	10	7	7	6	30	6	2257	10	4	2277	7	4	11	4	26	3707
Apprch %	0.9	98.5	0.4	0.2		33.3	23.3	23.3	20		0.3	99.1	0.4	0.2		26.9	15.4	42.3	15.4		
Total %	0.3	36.5	0.2	0.1	37.1	0.3	0.2	0.2	0.2	0.8	0.2	60.9	0.3	0.1	61.4	0.2	0.1	0.3	0.1	0.7	
Veh & Peds	12	1340	6	3	1361	9	7	6	6	28	6	2225	8	4	2243	7	4	11	4	26	3658
% Veh & Peds	100	99	100	100	99.1	90	100	85.7	100	93.3	100	98.6	80	100	98.5	100	100	100	100	100	98.7
Heavy Veh	0	13	0	0	13	1	0	1	0	2	0	32	2	0	34	0	0	0	0	0	49
% Heavy Veh	0	1	0	0	0.9	10	0	14.3	0	6.7	0	1.4	20	0	1.5	0	0	0	0	0	1.3

Marlin Engineering Inc.

2191 NW 97th Ave
Doral, FL 33172

Client: Village of Palmetto Bay
Job No.: 2013007.002
Project: DRTF Traffic Impact Analysis
County: Miami-Dade

File Name : SW 97 Ave @ SW 182 St
Site Code : 00000000
Start Date : 2/11/2014
Page No : 2

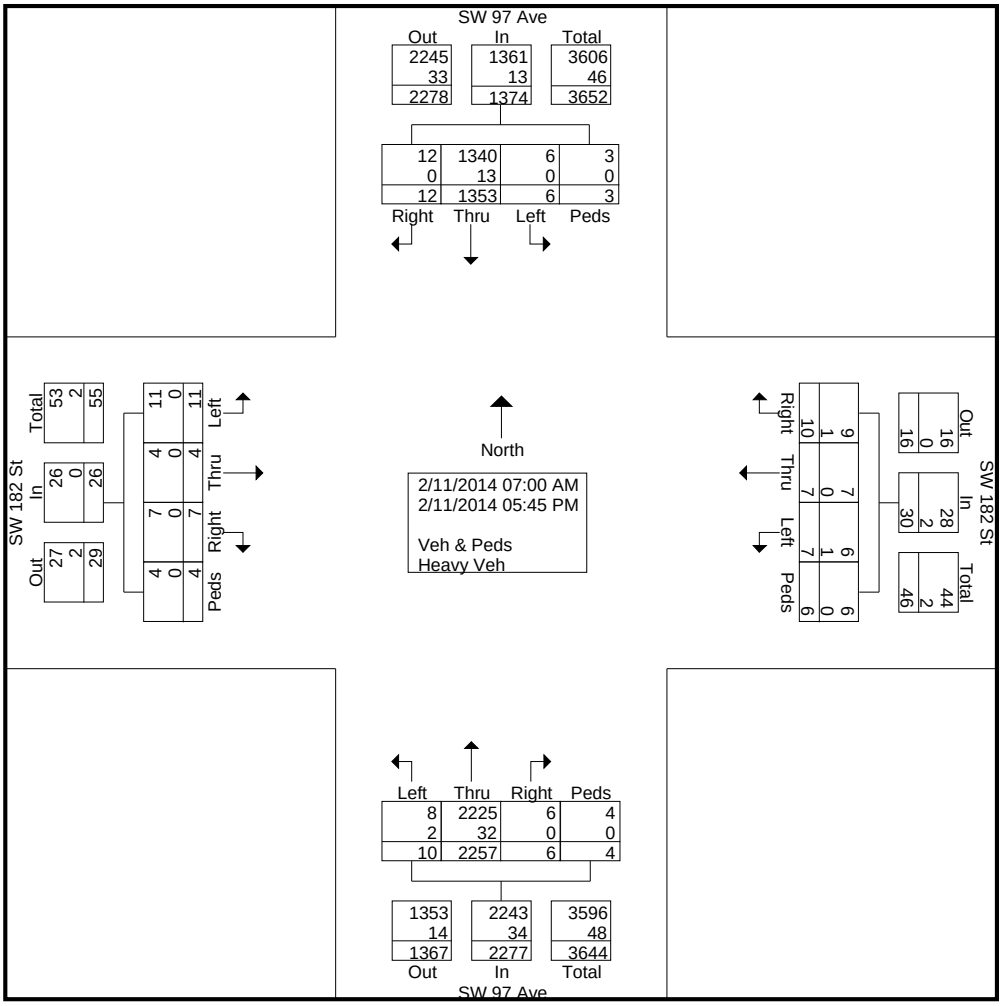

Marlin Engineering Inc.

2191 NW 97th Ave
Doral, FL 33172

Client: Village of Palmetto Bay
Job No.: 2013007.002
Project: DRTF Traffic Impact Analysis
County: Miami-Dade

File Name : SW 97 Ave @ SW 182 St
Site Code : 00000000
Start Date : 2/11/2014
Page No : 3

	SW 97 Ave Southbound					SW 182 St Westbound					SW 97 Ave Northbound					SW 182 St Eastbound					
Start Time	Right	Thru	Left	Peds	App. Total	Right	Thru	Left	Peds	App. Total	Right	Thru	Left	Peds	App. Total	Right	Thru	Left	Peds	App. Total	Int. Total
Peak Hour Analysis From 07:00 AM to 08:45 AM - Peak 1 of 1																					
Peak Hour for Entire Intersection Begins at 07:45 AM																					
07:45 AM	**2**	28	0	0	30	**2**	1	0	0	3	0	133	**1**	0	134	0	0	1	0	1	168
08:00 AM	2	**39**	0	0	**41**	0	1	0	0	1	**1**	135	0	0	136	**1**	0	0	0	1	179
08:15 AM	1	38	**1**	0	40	0	**2**	**1**	0	3	0	111	0	0	111	0	**1**	**2**	0	**3**	157
08:30 AM	0	37	0	0	37	1	0	0	**4**	**5**	1	**140**	1	**3**	**145**	1	0	2	0	3	**190**
Total Volume	5	142	1	0	148	3	4	1	4	12	2	519	2	3	526	2	1	5	0	8	694
% App. Total																					
PHF	.625	.910	.250	.000	.902	.375	.500	.250	.250	.600	.500	.927	.500	.250	.907	.500	.250	.625	.000	.667	.913

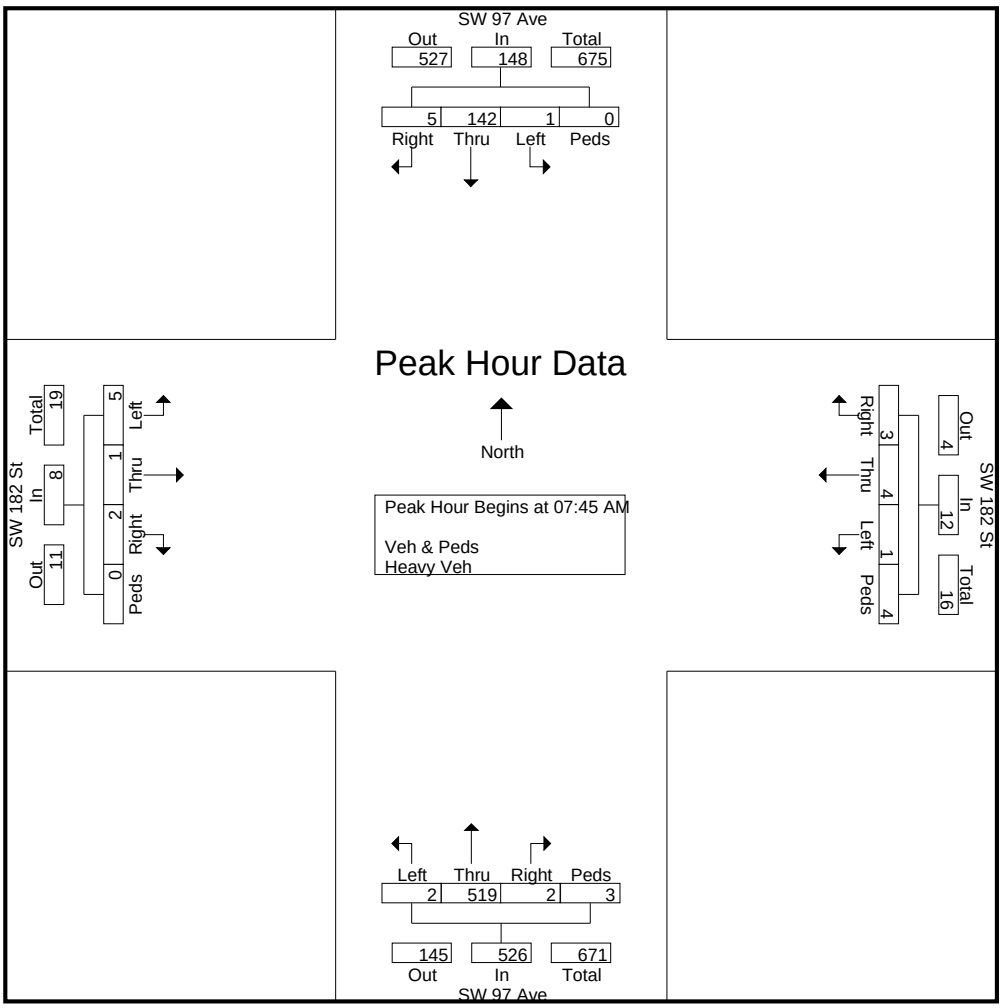

Marlin Engineering Inc.

2191 NW 97th Ave
Doral, FL 33172

Client: Village of Palmetto Bay
Job No.: 2013007.002
Project: DRTF Traffic Impact Analysis
County: Miami-Dade

File Name : SW 97 Ave @ SW 182 St
Site Code : 00000000
Start Date : 2/11/2014
Page No : 4

	SW 97 Ave Southbound					SW 182 St Westbound					SW 97 Ave Northbound					SW 182 St Eastbound					
Start Time	Right	Thru	Left	Peds	App. Total	Right	Thru	Left	Peds	App. Total	Right	Thru	Left	Peds	App. Total	Right	Thru	Left	Peds	App. Total	Int. Total
Peak Hour Analysis From 11:00 AM to 12:45 PM - Peak 1 of 1																					
Peak Hour for Entire Intersection Begins at 11:45 AM																					
11:45 AM	**2**	**59**	0	0	**61**	0	**1**	0	0	1	0	77	**1**	0	78	**1**	0	0	0	1	**141**
12:00 PM	0	55	0	0	55	**1**	0	0	0	1	**1**	68	1	0	70	0	0	0	0	0	126
12:15 PM	0	43	0	0	43	0	0	0	0	0	0	**85**	0	0	**85**	0	0	0	0	0	128
12:30 PM	0	54	**1**	0	55	1	0	**1**	0	**2**	0	81	0	0	81	1	0	0	**1**	**2**	140
Total Volume	2	211	1	0	214	2	1	1	0	4	1	311	2	0	314	2	0	0	1	3	535
% App. Total																					
PHF	.250	.894	.250	.000	.877	.500	.250	.250	.000	.500	.250	.915	.500	.000	.924	.500	.000	.000	.250	.375	.949

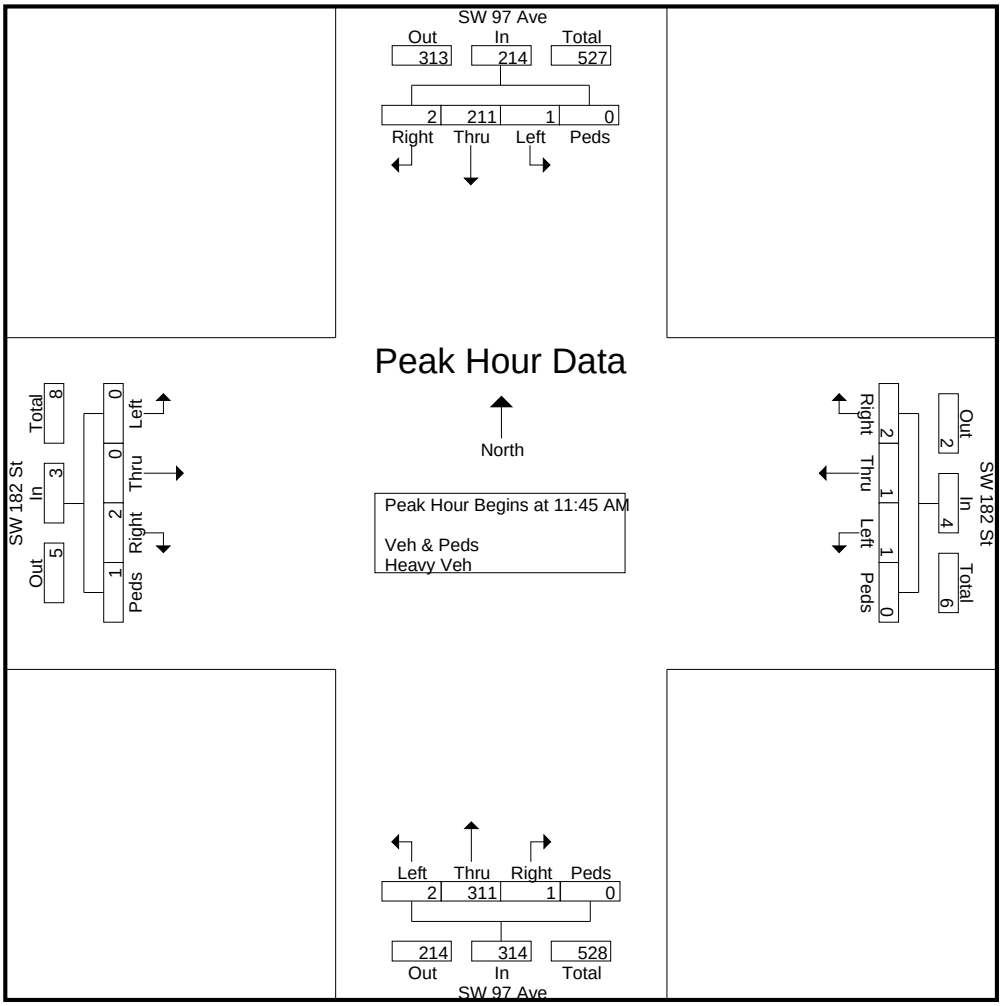

Marlin Engineering Inc.

2191 NW 97th Ave
Doral, FL 33172

Client: Village of Palmetto Bay
Job No.: 2013007.002
Project: DRTF Traffic Impact Analysis
County: Miami-Dade

File Name : SW 97 Ave @ SW 182 St
Site Code : 00000000
Start Date : 2/11/2014
Page No : 5

	SW 97 Ave Southbound					SW 182 St Westbound					SW 97 Ave Northbound					SW 182 St Eastbound					
Start Time	Right	Thru	Left	Peds	App. Total	Right	Thru	Left	Peds	App. Total	Right	Thru	Left	Peds	App. Total	Right	Thru	Left	Peds	App. Total	Int. Total
Peak Hour Analysis From 04:00 PM to 05:45 PM - Peak 1 of 1																					
Peak Hour for Entire Intersection Begins at 04:30 PM																					
04:30 PM	0	88	**1**	0	89	0	0	0	0	0	0	**99**	0	0	**99**	0	0	0	**1**	1	189
04:45 PM	0	74	0	0	74	0	0	0	0	0	0	81	0	0	81	**1**	0	0	0	1	156
05:00 PM	**2**	**129**	1	0	**132**	0	0	0	0	0	0	74	0	0	74	0	0	**1**	0	1	**207**
05:15 PM	0	108	0	0	108	0	0	0	0	0	0	92	**1**	0	93	1	0	0	1	**2**	203
Total Volume	2	399	2	0	403	0	0	0	0	0	0	346	1	0	347	2	0	1	2	5	755
% App. Total																					
PHF	.250	.773	.500	.000	.763	.000	.000	.000	.000	.000	.000	.874	.250	.000	.876	.500	.000	.250	.500	.625	.912

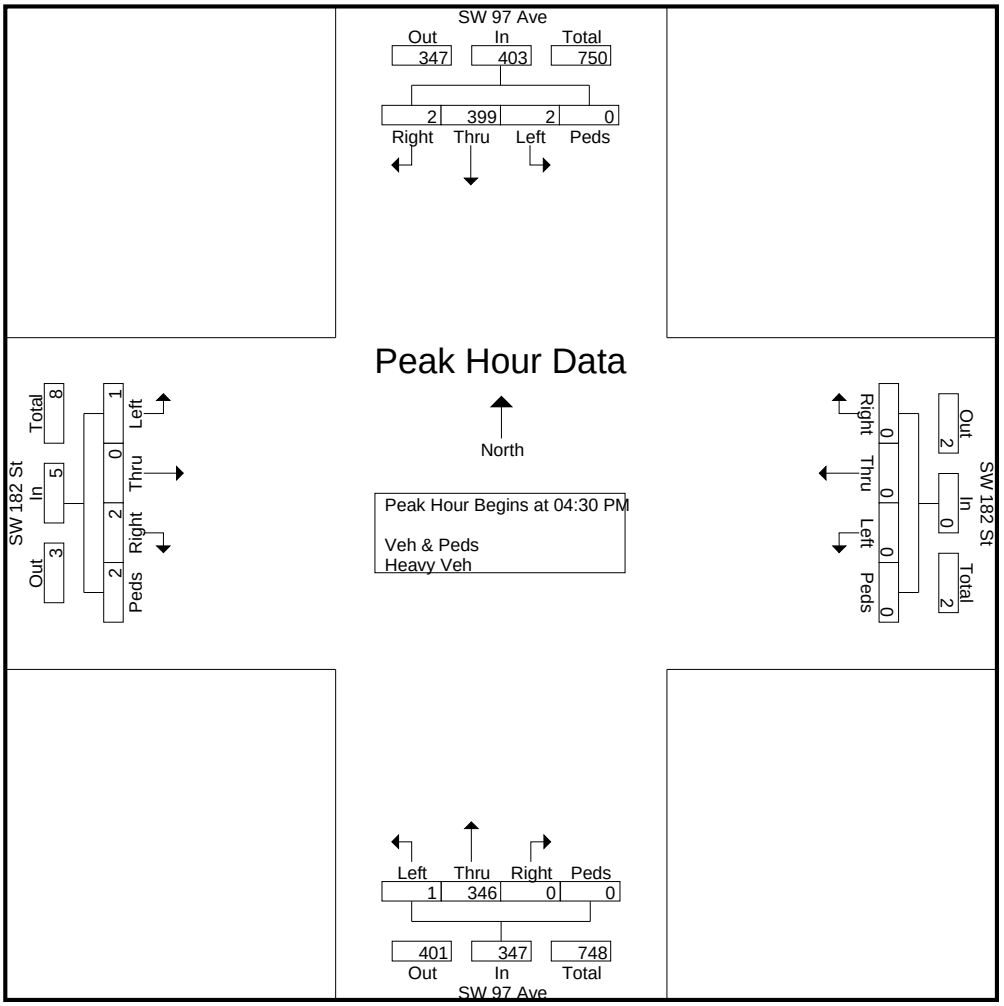

Marlin Engineering Inc.

2191 NW 97th Ave
Doral, FL 33172

Client: Village of Palmetto Bay
Job No.: 2013007.002
Project: DRTF Traffic Impact Analysis
County: Miami-Dade

File Name : SW 97 Ave @ SW 183 St
Site Code : 00000000
Start Date : 2/11/2014
Page No : 1

Groups Printed- Veh & Peds - Heavy Veh

	SW 97 Ave Southbound					SW 183 St Westbound					SW 97 Ave Northbound					SW 183 St Eastbound					
Start Time	Right	Thru	Left	Peds	App. Total	Right	Thru	Left	Peds	App. Total	Right	Thru	Left	Peds	App. Total	Right	Thru	Left	Peds	App. Total	Int. Total
07:00 AM	0	17	0	0	17	0	0	0	0	0	0	111	1	0	112	2	0	0	0	2	131
07:15 AM	1	18	0	1	20	0	1	0	0	1	1	109	1	0	111	5	0	3	0	8	140
07:30 AM	0	19	2	0	21	1	0	1	0	2	2	108	6	0	116	11	0	0	0	11	150
07:45 AM	2	27	0	0	29	1	1	0	0	2	1	112	7	0	120	5	0	1	1	7	158
Total	3	81	2	1	87	2	2	1	0	5	4	440	15	0	459	23	0	4	1	28	579
08:00 AM	1	31	0	0	32	0	0	0	0	0	2	134	3	0	139	6	0	0	0	6	177
08:15 AM	3	35	0	0	38	2	1	0	0	3	0	110	2	0	112	10	1	1	0	12	165
08:30 AM	0	42	1	0	43	1	0	0	0	1	1	136	3	0	140	3	1	1	0	5	189
08:45 AM	2	32	2	0	36	0	0	0	0	0	0	124	7	0	131	10	1	0	0	11	178
Total	6	140	3	0	149	3	1	0	0	4	3	504	15	0	522	29	3	2	0	34	709
*** BREAK ***																					
11:00 AM	0	34	0	0	34	0	2	1	0	3	1	57	1	0	59	4	0	0	0	4	100
11:15 AM	0	48	0	0	48	0	0	0	0	0	0	79	1	0	80	7	1	0	0	8	136
11:30 AM	0	49	1	0	50	0	0	0	0	0	0	68	3	0	71	1	0	0	0	1	122
11:45 AM	0	56	0	0	56	1	0	1	0	2	0	76	2	0	78	6	0	2	0	8	144
Total	0	187	1	0	188	1	2	2	0	5	1	280	7	0	288	18	1	2	0	21	502
12:00 PM	0	56	0	0	56	0	1	1	0	2	1	71	0	0	72	5	0	0	0	5	135
12:15 PM	0	44	0	0	44	0	0	1	0	1	0	83	3	0	86	4	0	0	0	4	135
12:30 PM	1	56	0	0	57	1	0	0	0	1	1	77	0	0	78	6	0	2	0	8	144
12:45 PM	0	46	0	0	46	0	1	1	0	2	0	72	2	0	74	6	1	2	0	9	131
Total	1	202	0	0	203	1	2	3	0	6	2	303	5	0	310	21	1	4	0	26	545
*** BREAK ***																					
04:00 PM	2	65	0	0	67	0	14	0	0	14	2	61	3	0	66	13	15	3	0	31	178
04:15 PM	0	69	1	0	70	0	1	1	0	2	0	111	3	0	114	15	3	2	0	20	206
04:30 PM	1	88	0	0	89	0	1	1	0	2	0	95	2	0	97	18	0	2	0	20	208
04:45 PM	0	75	0	0	75	1	1	0	0	2	1	82	2	0	85	13	1	0	0	14	176
Total	3	297	1	0	301	1	17	2	0	20	3	349	10	0	362	59	19	7	0	85	768
05:00 PM	0	126	3	0	129	1	0	0	0	1	0	72	3	0	75	15	0	1	0	16	221
05:15 PM	0	104	0	0	104	0	0	1	0	1	0	88	2	0	90	15	0	4	0	19	214
05:30 PM	1	105	0	0	106	0	2	0	0	2	0	71	2	0	73	15	0	0	0	15	196
05:45 PM	0	75	0	1	76	0	1	0	0	1	0	85	2	0	87	21	1	1	0	23	187
Total	1	410	3	1	415	1	3	1	0	5	0	316	9	0	325	66	1	6	0	73	818
Grand Total	14	1317	10	2	1343	9	27	9	0	45	13	2192	61	0	2266	216	25	25	1	267	3921
Apprch %	1	98.1	0.7	0.1		20	60	20	0		0.6	96.7	2.7	0		80.9	9.4	9.4	0.4		
Total %	0.4	33.6	0.3	0.1	34.3	0.2	0.7	0.2	0	1.1	0.3	55.9	1.6	0	57.8	5.5	0.6	0.6	0	6.8	
Veh & Peds	14	1317	10	2	1343	9	27	9	0	45	13	2191	61	0	2265	216	25	25	1	267	3920
% Veh & Peds	100	100	100	100	100	100	100	100	0	100	100	100	100	0	100	100	100	100	100	100	100
Heavy Veh	0	0	0	0	0	0	0	0	0	0	0	1	0	0	1	0	0	0	0	0	1
% Heavy Veh	0	0	0	0	0	0	0	0	0	0	0	0	0	0	0	0	0	0	0	0	0

Marlin Engineering Inc.

2191 NW 97th Ave
Doral, FL 33172

Client: Village of Palmetto Bay
Job No.: 2013007.002
Project: DRTF Traffic Impact Analysis
County: Miami-Dade

File Name : SW 97 Ave @ SW 183 St
Site Code : 00000000
Start Date : 2/11/2014
Page No : 2

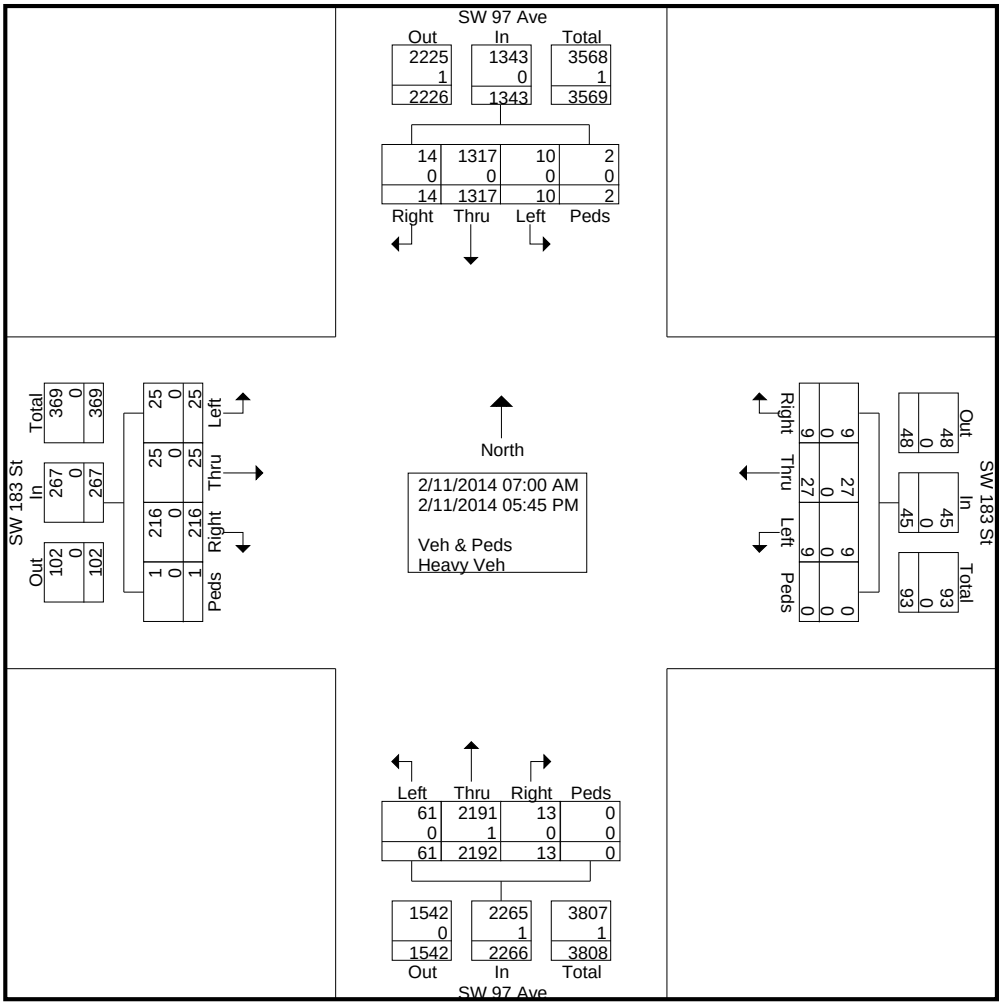

Marlin Engineering Inc.

2191 NW 97th Ave
Doral, FL 33172

Client: Village of Palmetto Bay
Job No.: 2013007.002
Project: DRTF Traffic Impact Analysis
County: Miami-Dade

File Name : SW 97 Ave @ SW 183 St
Site Code : 00000000
Start Date : 2/11/2014
Page No : 3

	SW 97 Ave Southbound					SW 183 St Westbound					SW 97 Ave Northbound					SW 183 St Eastbound					
Start Time	Right	Thru	Left	Peds	App. Total	Right	Thru	Left	Peds	App. Total	Right	Thru	Left	Peds	App. Total	Right	Thru	Left	Peds	App. Total	Int. Total
Peak Hour Analysis From 07:00 AM to 08:45 AM - Peak 1 of 1																					
Peak Hour for Entire Intersection Begins at 08:00 AM																					
08:00 AM	1	31	0	0	32	0	0	0	0	0	**2**	134	3	0	139	6	0	0	0	6	177
08:15 AM	**3**	35	0	0	38	**2**	**1**	0	0	**3**	0	110	2	0	112	**10**	**1**	**1**	0	**12**	165
08:30 AM	0	**42**	1	0	**43**	1	0	0	0	1	1	**136**	3	0	**140**	3	1	1	0	5	**189**
08:45 AM	2	32	**2**	0	36	0	0	0	0	0	0	124	**7**	0	131	10	1	0	0	11	178
Total Volume	6	140	3	0	149	3	1	0	0	4	3	504	15	0	522	29	3	2	0	34	709
% App. Total																					
PHF	.500	.833	.375	.000	.866	.375	.250	.000	.000	.333	.375	.926	.536	.000	.932	.725	.750	.500	.000	.708	.938

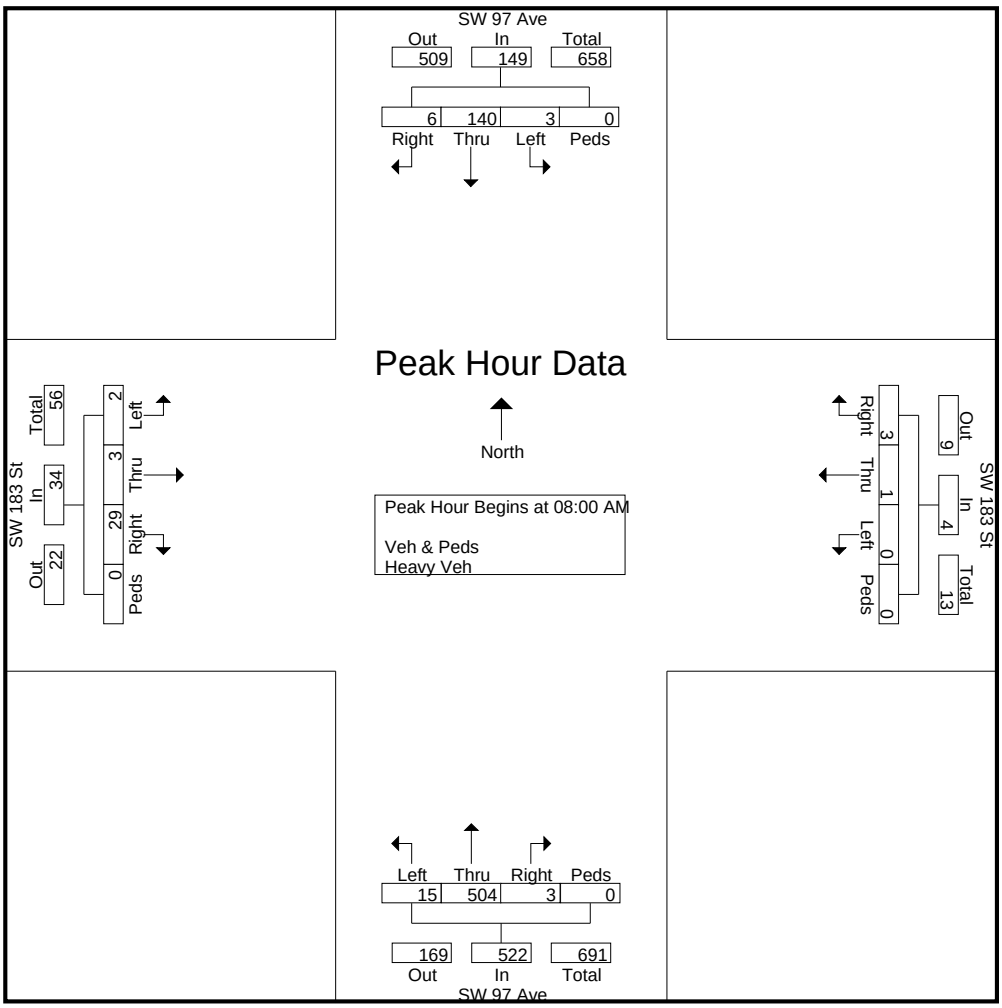

Marlin Engineering Inc.

2191 NW 97th Ave
Doral, FL 33172

Client: Village of Palmetto Bay
Job No.: 2013007.002
Project: DRTF Traffic Impact Analysis
County: Miami-Dade

File Name : SW 97 Ave @ SW 183 St
Site Code : 00000000
Start Date : 2/11/2014
Page No : 4

	SW 97 Ave Southbound					SW 183 St Westbound					SW 97 Ave Northbound					SW 183 St Eastbound					
Start Time	Right	Thru	Left	Peds	App. Total	Right	Thru	Left	Peds	App. Total	Right	Thru	Left	Peds	App. Total	Right	Thru	Left	Peds	App. Total	Int. Total
Peak Hour Analysis From 11:00 AM to 12:45 PM - Peak 1 of 1																					
Peak Hour for Entire Intersection Begins at 11:45 AM																					
11:45 AM	0	**56**	0	0	56	**1**	0	**1**	0	**2**	0	76	2	0	78	**6**	0	**2**	0	**8**	**144**
12:00 PM	0	56	0	0	56	0	**1**	1	0	2	**1**	71	0	0	72	5	0	0	0	5	135
12:15 PM	0	44	0	0	44	0	0	1	0	1	0	**83**	**3**	0	**86**	4	0	0	0	4	135
12:30 PM	**1**	56	0	0	**57**	1	0	0	0	1	1	77	0	0	78	6	0	2	0	8	144
Total Volume	1	212	0	0	213	2	1	3	0	6	2	307	5	0	314	21	0	4	0	25	558
% App. Total																					
PHF	.250	.946	.000	.000	.934	.500	.250	.750	.000	.750	.500	.925	.417	.000	.913	.875	.000	.500	.000	.781	.969

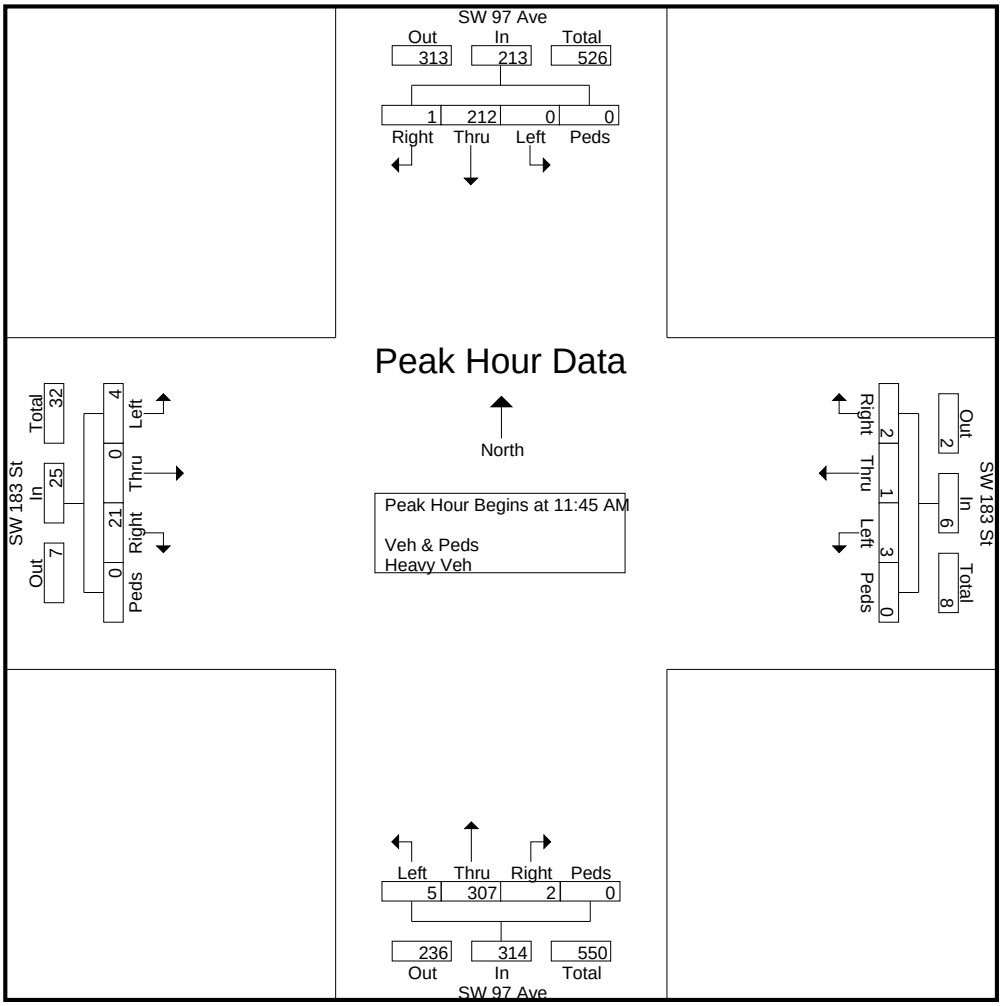

Marlin Engineering Inc.

2191 NW 97th Ave
Doral, FL 33172

Client: Village of Palmetto Bay
Job No.: 2013007.002
Project: DRTF Traffic Impact Analysis
County: Miami-Dade

File Name : SW 97 Ave @ SW 183 St
Site Code : 00000000
Start Date : 2/11/2014
Page No : 5

	SW 97 Ave Southbound					SW 183 St Westbound					SW 97 Ave Northbound					SW 183 St Eastbound					
Start Time	Right	Thru	Left	Peds	App. Total	Right	Thru	Left	Peds	App. Total	Right	Thru	Left	Peds	App. Total	Right	Thru	Left	Peds	App. Total	Int. Total
Peak Hour Analysis From 04:00 PM to 05:45 PM - Peak 1 of 1																					
Peak Hour for Entire Intersection Begins at 04:30 PM																					
04:30 PM	**1**	88	0	0	89	0	**1**	**1**	0	**2**	0	**95**	2	0	**97**	**18**	0	2	0	**20**	208
04:45 PM	0	75	0	0	75	**1**	1	0	0	2	**1**	82	2	0	85	13	**1**	0	0	14	176
05:00 PM	0	**126**	**3**	0	**129**	1	0	0	0	1	0	72	**3**	0	75	15	0	1	0	16	**221**
05:15 PM	0	104	0	0	104	0	0	1	0	1	0	88	2	0	90	15	0	**4**	0	19	214
Total Volume	1	393	3	0	397	2	2	2	0	6	1	337	9	0	347	61	1	7	0	69	819
% App. Total																					
PHF	.250	.780	.250	.000	.769	.500	.500	.500	.000	.750	.250	.887	.750	.000	.894	.847	.250	.438	.000	.863	.926

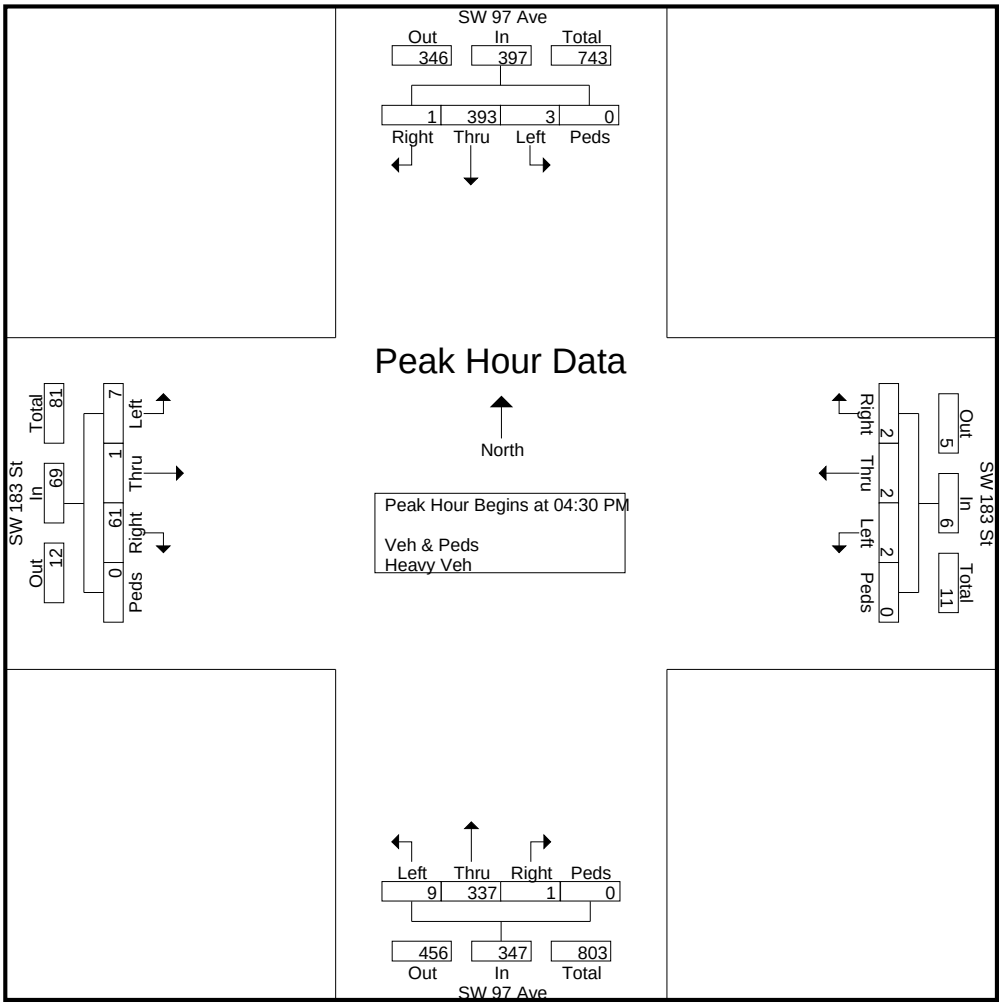

Marlin Engineering Inc.

2191 NW 97th Ave
Doral, FL 33172

Client: Village of Palmetto Bay
Job No.: 2013007.002
Project: DRTF Traffic Impact Analysis
County: Miami-Dade

File Name : SW 97 Ave @ SW 184 St
Site Code : 00000000
Start Date : 2/11/2014
Page No : 1

Groups Printed- Veh & Peds - Heavy Veh

	SW 97 Ave Southbound				SW 184 St Westbound				SW 97 Ave Northbound				SW 184 St Eastbound				
Start Time	Right	Thru	Left	Peds	Right	Thru	Left	Peds	Right	Thru	Left	Peds	Right	Thru	Left	Peds	Int. Total
07:00 AM	0	7	0	0	3	61	4	0	10	63	17	0	9	49	6	1	230
07:15 AM	1	3	0	0	7	62	5	0	15	96	25	0	23	70	5	0	312
07:30 AM	0	20	4	0	18	86	6	0	13	82	30	0	19	106	11	0	395
07:45 AM	0	17	4	0	7	96	6	0	20	122	53	0	27	68	11	0	431
Total	1	47	8	0	35	305	21	0	58	363	125	0	78	293	33	1	1368
08:00 AM	0	30	5	1	6	81	15	0	18	135	63	0	29	53	14	0	450
08:15 AM	1	20	4	1	6	103	20	1	12	101	51	0	25	81	7	0	433
08:30 AM	2	13	2	1	10	73	18	0	13	115	43	0	13	63	16	0	382
08:45 AM	1	34	0	0	12	99	24	1	8	89	43	0	18	69	12	0	410
Total	4	97	11	3	34	356	77	2	51	440	200	0	85	266	49	0	1675
*** BREAK ***																	
11:00 AM	5	9	3	0	1	61	10	0	3	37	28	0	7	20	6	0	190
11:15 AM	2	23	3	0	3	66	15	0	10	45	24	0	16	29	7	0	243
11:30 AM	2	20	2	0	2	87	14	0	8	37	35	0	6	29	7	0	249
11:45 AM	5	44	11	0	5	65	8	0	10	51	22	0	7	19	4	0	251
Total	14	96	19	0	11	279	47	0	31	170	109	0	36	97	24	0	933
12:00 PM	7	32	2	0	3	87	17	0	7	32	23	0	20	79	8	0	317
12:15 PM	3	14	5	0	6	64	17	0	4	37	30	0	10	22	6	0	218
12:30 PM	6	34	4	0	0	81	15	0	5	44	30	0	8	80	8	0	315
12:45 PM	2	13	1	0	1	67	12	0	11	49	27	0	15	82	22	0	302
Total	18	93	12	0	10	299	61	0	27	162	110	0	53	263	44	0	1152
*** BREAK ***																	
04:00 PM	8	71	0	0	9	113	24	0	7	45	23	0	43	88	11	0	442
04:15 PM	12	88	1	0	3	121	37	0	20	54	42	0	22	57	5	0	462
04:30 PM	7	107	6	0	4	117	32	0	12	52	33	0	19	68	7	0	464
04:45 PM	6	46	4	1	8	112	43	0	16	46	38	0	24	62	6	0	412
Total	33	312	11	1	24	463	136	0	55	197	136	0	108	275	29	0	1780
05:00 PM	26	149	12	0	4	122	36	0	14	49	31	0	37	87	5	0	572
05:15 PM	10	126	5	0	0	104	39	0	20	62	42	0	34	97	4	0	543
05:30 PM	12	77	1	0	4	105	42	0	13	43	41	0	45	52	7	1	443
05:45 PM	7	157	6	0	0	109	41	0	13	54	21	0	44	83	7	0	542
Total	55	509	24	0	8	440	158	0	60	208	135	0	160	319	23	1	2100
Grand Total	125	1154	85	4	122	2142	500	2	282	1540	815	0	520	1513	202	2	9008
Apprch %	9.1	84.4	6.2	0.3	4.4	77.4	18.1	0.1	10.7	58.4	30.9	0	23.2	67.6	9	0.1	
Total %	1.4	12.8	0.9	0	1.4	23.8	5.6	0	3.1	17.1	9	0	5.8	16.8	2.2	0	
Veh & Peds	123	1147	84	4	122	2100	493	2	268	1515	795	0	507	1491	197	2	8850
% Veh & Peds	98.4	99.4	98.8	100	100	98	98.6	100	95	98.4	97.5	0	97.5	98.5	97.5	100	98.2
Heavy Veh	2	7	1	0	0	42	7	0	14	25	20	0	13	22	5	0	158
% Heavy Veh	1.6	0.6	1.2	0	0	2	1.4	0	5	1.6	2.5	0	2.5	1.5	2.5	0	1.8

Marlin Engineering Inc.

2191 NW 97th Ave
Doral, FL 33172

Client: Village of Palmetto Bay
Job No.: 2013007.002
Project: DRTF Traffic Impact Analysis
County: Miami-Dade

File Name : SW 97 Ave @ SW 184 St
Site Code : 00000000
Start Date : 2/11/2014
Page No : 2

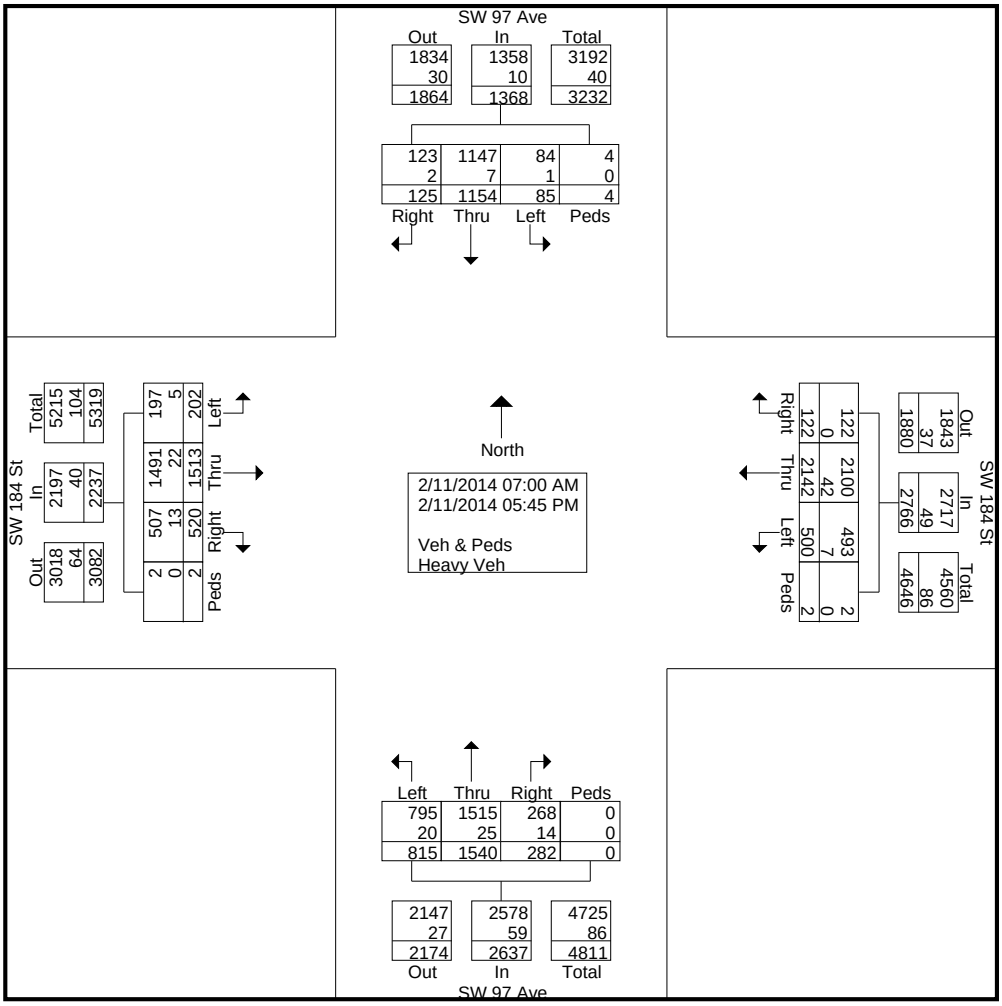

Marlin Engineering Inc.

2191 NW 97th Ave
Doral, FL 33172

Client: Village of Palmetto Bay
Job No.: 2013007.002
Project: DRTF Traffic Impact Analysis
County: Miami-Dade

File Name : SW 97 Ave @ SW 184 St
Site Code : 00000000
Start Date : 2/11/2014
Page No : 3

	SW 97 Ave Southbound					SW 184 St Westbound					SW 97 Ave Northbound					SW 184 St Eastbound					
Start Time	Right	Thru	Left	Peds	App. Total	Right	Thru	Left	Peds	App. Total	Right	Thru	Left	Peds	App. Total	Right	Thru	Left	Peds	App. Total	Int. Total
Peak Hour Analysis From 07:00 AM to 08:45 AM - Peak 1 of 1																					
Peak Hour for Entire Intersection Begins at 07:30 AM																					
07:30 AM	0	20	4	0	24	**18**	86	6	0	110	13	82	30	0	125	19	**106**	11	0	**136**	395
07:45 AM	0	17	4	0	21	7	96	6	0	109	**20**	122	53	0	195	27	68	11	0	106	431
08:00 AM	0	**30**	**5**	**1**	**36**	6	81	15	0	102	18	**135**	**63**	0	**216**	**29**	53	**14**	0	96	**450**
08:15 AM	**1**	20	4	1	26	6	**103**	**20**	**1**	**130**	12	101	51	0	164	25	81	7	0	113	433
Total Volume	1	87	17	2	107	37	366	47	1	451	63	440	197	0	700	100	308	43	0	451	1709
% App. Total																					
PHF	.250	.725	.850	.500	.743	.514	.888	.588	.250	.867	.788	.815	.782	.000	.810	.862	.726	.768	.000	.829	.949

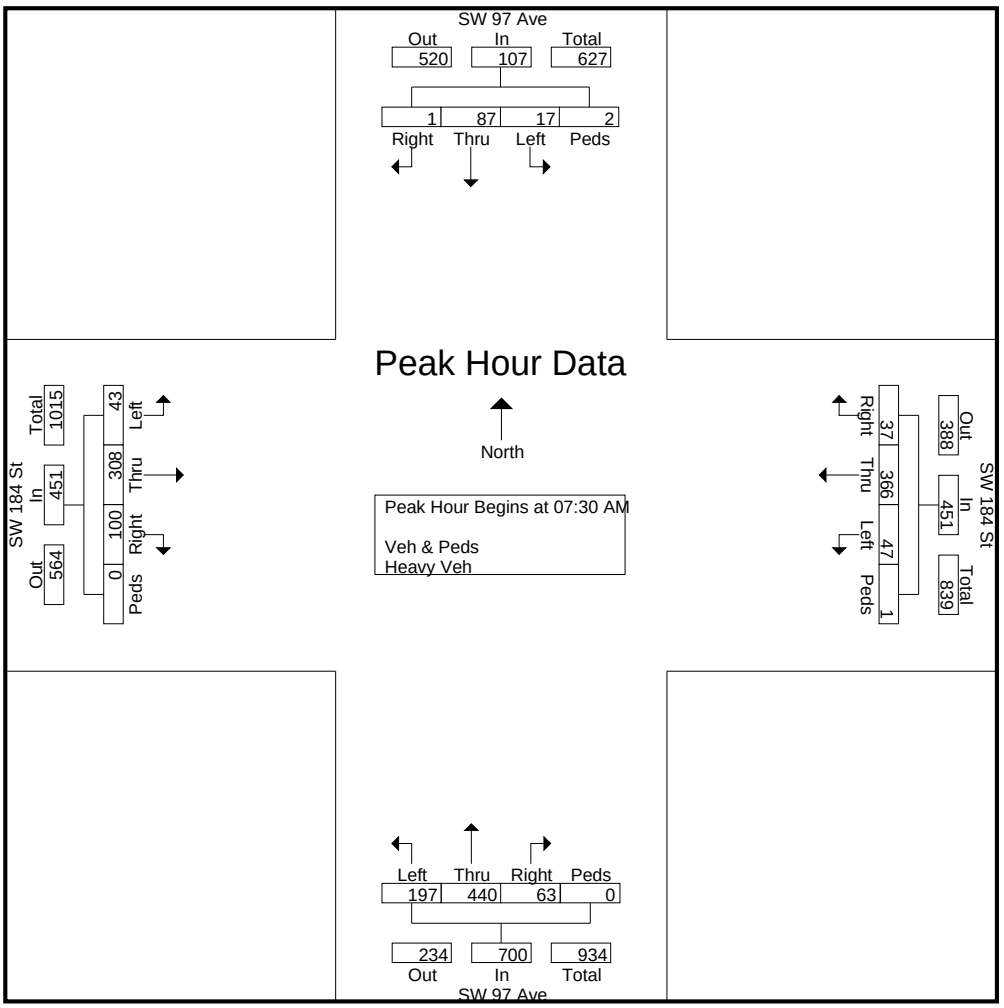

Marlin Engineering Inc.

2191 NW 97th Ave
Doral, FL 33172

Client: Village of Palmetto Bay
Job No.: 2013007.002
Project: DRTF Traffic Impact Analysis
County: Miami-Dade

File Name : SW 97 Ave @ SW 184 St
Site Code : 00000000
Start Date : 2/11/2014
Page No : 4

	SW 97 Ave Southbound					SW 184 St Westbound					SW 97 Ave Northbound					SW 184 St Eastbound					
Start Time	Right	Thru	Left	Peds	App. Total	Right	Thru	Left	Peds	App. Total	Right	Thru	Left	Peds	App. Total	Right	Thru	Left	Peds	App. Total	Int. Total
Peak Hour Analysis From 11:00 AM to 12:45 PM - Peak 1 of 1																					
Peak Hour for Entire Intersection Begins at 12:00 PM																					
12:00 PM	**7**	32	2	0	41	3	**87**	**17**	0	**107**	7	32	23	0	62	**20**	79	8	0	107	**317**
12:15 PM	3	14	**5**	0	22	**6**	64	17	0	87	4	37	**30**	0	71	10	22	6	0	38	218
12:30 PM	6	**34**	4	0	**44**	0	81	15	0	96	5	44	30	0	79	8	80	8	0	96	315
12:45 PM	2	13	1	0	16	1	67	12	0	80	**11**	**49**	27	0	**87**	15	**82**	**22**	0	**119**	302
Total Volume	18	93	12	0	123	10	299	61	0	370	27	162	110	0	299	53	263	44	0	360	1152
% App. Total																					
PHF	.643	.684	.600	.000	.699	.417	.859	.897	.000	.864	.614	.827	.917	.000	.859	.663	.802	.500	.000	.756	.909

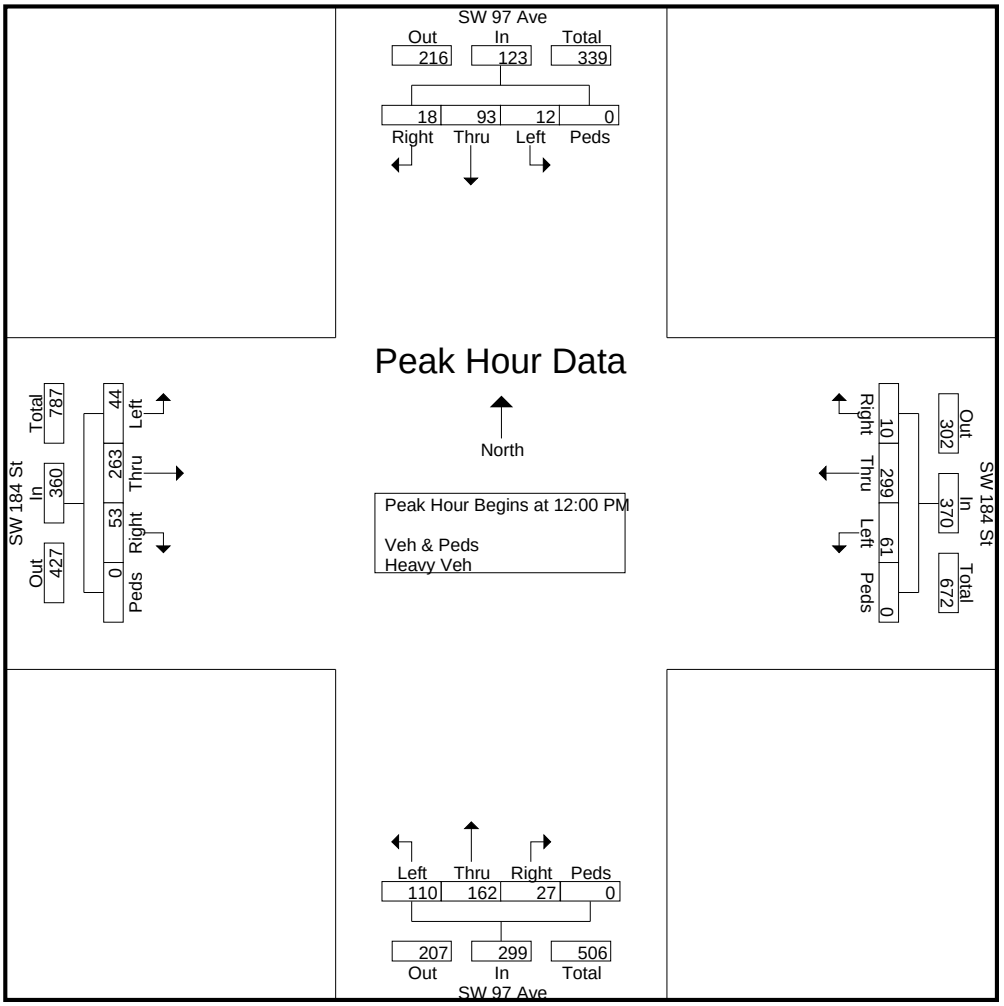

Marlin Engineering Inc.

2191 NW 97th Ave
Doral, FL 33172

Client: Village of Palmetto Bay
Job No.: 2013007.002
Project: DRTF Traffic Impact Analysis
County: Miami-Dade

File Name : SW 97 Ave @ SW 184 St
Site Code : 00000000
Start Date : 2/11/2014
Page No : 5

	SW 97 Ave Southbound					SW 184 St Westbound					SW 97 Ave Northbound					SW 184 St Eastbound					
Start Time	Right	Thru	Left	Peds	App. Total	Right	Thru	Left	Peds	App. Total	Right	Thru	Left	Peds	App. Total	Right	Thru	Left	Peds	App. Total	Int. Total
Peak Hour Analysis From 04:00 PM to 05:45 PM - Peak 1 of 1																					
Peak Hour for Entire Intersection Begins at 05:00 PM																					
05:00 PM	**26**	149	**12**	0	**187**	**4**	**122**	36	0	**162**	14	49	31	0	94	37	87	5	0	129	**572**
05:15 PM	10	126	5	0	141	0	104	39	0	143	**20**	**62**	**42**	0	**124**	34	**97**	4	0	**135**	543
05:30 PM	12	77	1	0	90	4	105	**42**	0	151	13	43	41	0	97	**45**	52	**7**	**1**	105	443
05:45 PM	7	**157**	6	0	170	0	109	41	0	150	13	54	21	0	88	44	83	7	0	134	542
Total Volume	55	509	24	0	588	8	440	158	0	606	60	208	135	0	403	160	319	23	1	503	2100
% App. Total																					
PHF	.529	.811	.500	.000	.786	.500	.902	.940	.000	.935	.750	.839	.804	.000	.813	.889	.822	.821	.250	.931	.918

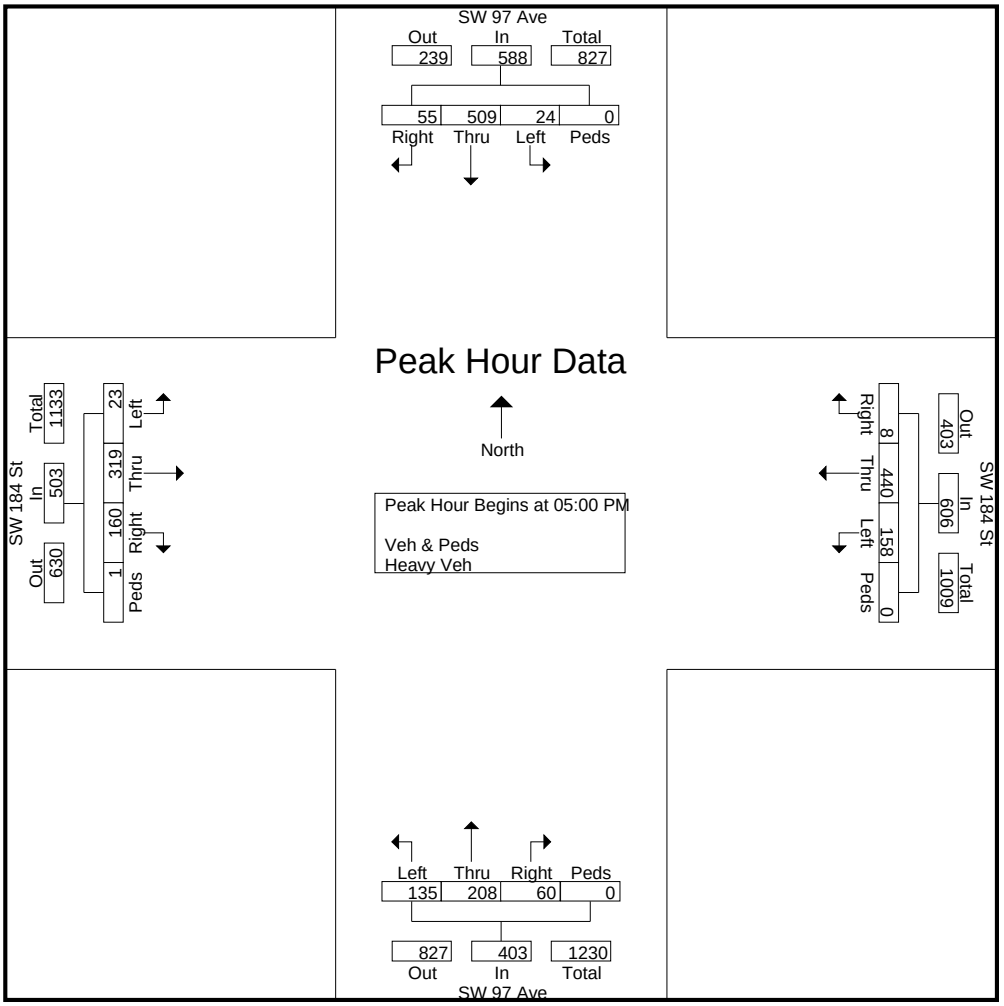

Marlin Engineering Inc.

2191 NW 97th Ave
Doral, FL 33172

Client: Village of Palmetto Bay
Job No.: 2013007.002
Project: DRTF Traffic Impact Analysis
County: Miami-Dade

File Name : SW 95 Ct @ SW 184 St
Site Code : 00000000
Start Date : 2/12/2014
Page No : 1

Groups Printed- Veh & Peds - Heavy Veh

	SW 95 Ct Southbound					SW 184 St Westbound					SW 95 Ct Northbound					SW 184 St Eastbound					
Start Time	Right	Thru	Left	Peds	App. Total	Right	Thru	Left	Peds	App. Total	Right	Thru	Left	Peds	App. Total	Right	Thru	Left	Peds	App. Total	Int. Total
07:00 AM	0	0	1	1	2	2	135	0	0	137	0	0	0	0	0	0	59	0	0	59	198
07:15 AM	0	0	0	0	0	5	89	0	0	94	0	0	0	0	0	0	116	0	0	116	210
07:30 AM	1	0	2	0	3	5	151	0	0	156	1	0	0	0	1	0	124	0	0	124	284
07:45 AM	1	0	1	0	2	5	181	0	0	186	0	0	0	0	0	0	139	3	0	142	330
Total	2	0	4	1	7	17	556	0	0	573	1	0	0	0	1	0	438	3	0	441	1022
08:00 AM	2	0	2	0	4	10	142	0	0	152	0	0	0	0	0	0	108	1	0	109	265
08:15 AM	0	0	0	0	0	7	145	0	0	152	0	0	0	0	0	0	123	1	0	124	276
08:30 AM	0	0	0	0	0	4	160	0	0	164	0	0	0	0	0	0	103	1	0	104	268
08:45 AM	1	0	0	0	1	1	175	0	0	176	0	0	0	0	0	0	134	0	0	134	311
Total	3	0	2	0	5	22	622	0	0	644	0	0	0	0	0	0	468	3	0	471	1120
*** BREAK ***																					
11:00 AM	0	0	0	0	0	0	110	0	0	110	0	0	0	0	0	0	87	1	0	88	198
11:15 AM	1	0	1	0	2	0	125	0	0	125	0	0	0	0	0	0	84	0	0	84	211
11:30 AM	0	0	0	1	1	0	117	0	0	117	0	0	0	0	0	0	90	0	0	90	208
11:45 AM	0	0	2	0	2	2	143	0	0	145	0	0	0	0	0	0	93	0	0	93	240
Total	1	0	3	1	5	2	495	0	0	497	0	0	0	0	0	0	354	1	0	355	857
12:00 PM	0	0	0	0	0	0	106	0	0	106	0	0	0	0	0	0	105	1	0	106	212
12:15 PM	1	0	1	0	2	2	106	0	0	108	0	0	0	0	0	0	97	2	0	99	209
12:30 PM	0	0	3	0	3	4	122	0	1	127	0	0	0	1	1	0	108	0	1	109	240
12:45 PM	1	0	1	0	2	5	112	0	1	118	0	0	0	0	0	0	110	2	0	112	232
Total	2	0	5	0	7	11	446	0	2	459	0	0	0	1	1	0	420	5	1	426	893
*** BREAK ***																					
04:00 PM	0	0	1	0	1	2	145	0	0	147	0	0	0	0	0	0	149	2	0	151	299
04:15 PM	0	0	0	0	0	0	180	0	0	180	0	0	0	0	0	0	128	2	1	131	311
04:30 PM	1	0	2	0	3	0	181	0	0	181	0	0	0	0	0	0	124	2	0	126	310
04:45 PM	0	0	0	0	0	0	189	1	1	191	0	0	0	2	2	0	147	2	0	149	342
Total	1	0	3	0	4	2	695	1	1	699	0	0	0	2	2	0	548	8	1	557	1262
05:00 PM	0	0	2	0	2	5	170	0	0	175	0	0	0	0	0	0	151	0	0	151	328
05:15 PM	1	0	2	2	5	3	195	0	0	198	0	0	0	0	0	0	144	1	0	145	348
05:30 PM	0	0	1	1	2	1	164	0	3	168	0	0	0	0	0	0	140	1	0	141	311
05:45 PM	2	0	1	0	3	0	174	0	0	174	0	0	0	0	0	0	141	2	1	144	321
Total	3	0	6	3	12	9	703	0	3	715	0	0	0	0	0	0	576	4	1	581	1308
Grand Total	12	0	23	5	40	63	3517	1	6	3587	1	0	0	3	4	0	2804	24	3	2831	6462
Apprch %	30	0	57.5	12.5		1.8	98	0	0.2		25	0	0	75		0	99	0.8	0.1		
Total %	0.2	0	0.4	0.1	0.6	1	54.4	0	0.1	55.5	0	0	0	0	0.1	0	43.4	0.4	0	43.8	
Veh & Peds	12	0	23	5	40	61	3457	1	6	3525	1	0	0	3	4	0	2770	24	3	2797	6366
% Veh & Peds	100	0	100	100	100	96.8	98.3	100	100	98.3	100	0	0	100	100	0	98.8	100	100	98.8	98.5
Heavy Veh	0	0	0	0	0	2	60	0	0	62	0	0	0	0	0	0	34	0	0	34	96
% Heavy Veh	0	0	0	0	0	3.2	1.7	0	0	1.7	0	0	0	0	0	0	1.2	0	0	1.2	1.5

Marlin Engineering Inc.

2191 NW 97th Ave
Doral, FL 33172

Client: Village of Palmetto Bay
Job No.: 2013007.002
Project: DRTF Traffic Impact Analysis
County: Miami-Dade

File Name : SW 95 Ct @ SW 184 St
Site Code : 00000000
Start Date : 2/12/2014
Page No : 2

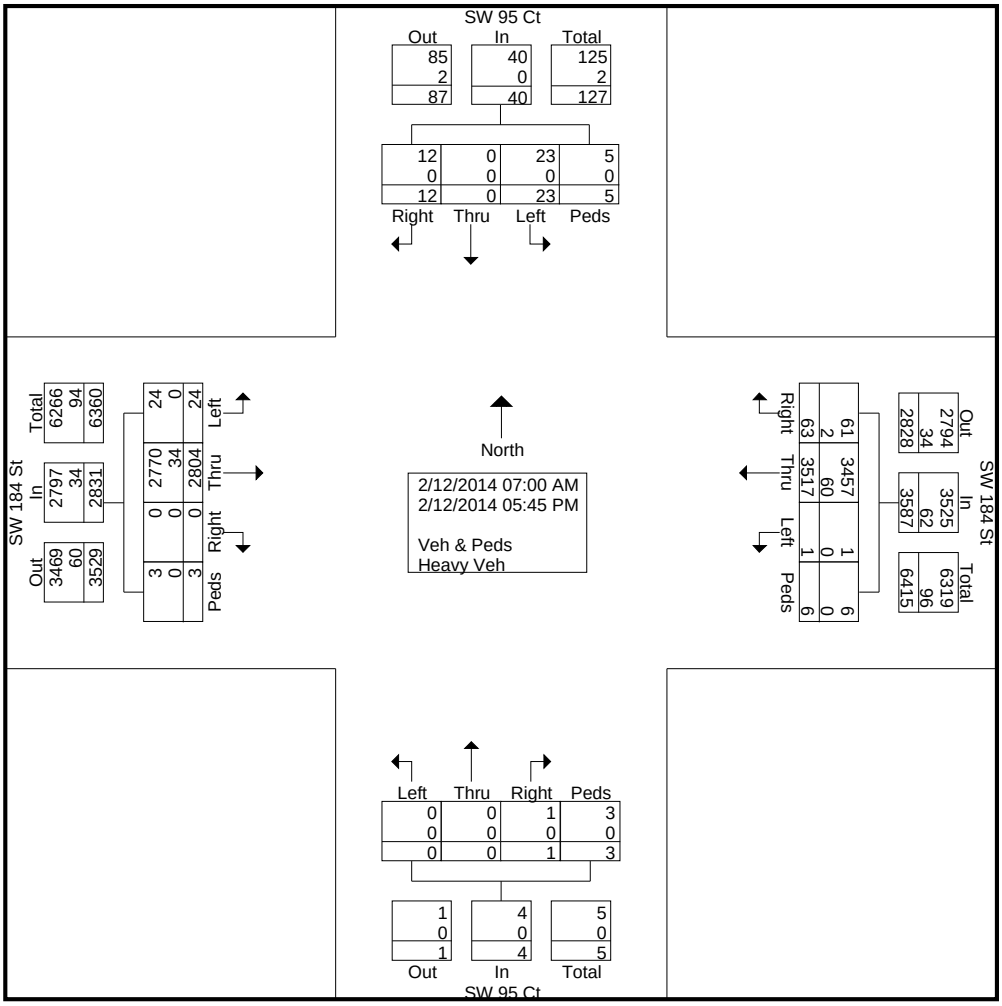

Marlin Engineering Inc.

2191 NW 97th Ave
Doral, FL 33172

Client: Village of Palmetto Bay
Job No.: 2013007.002
Project: DRTF Traffic Impact Analysis
County: Miami-Dade

File Name : SW 95 Ct @ SW 184 St
Site Code : 00000000
Start Date : 2/12/2014
Page No : 3

	SW 95 Ct Southbound					SW 184 St Westbound					SW 95 Ct Northbound					SW 184 St Eastbound					
Start Time	Right	Thru	Left	Peds	App. Total	Right	Thru	Left	Peds	App. Total	Right	Thru	Left	Peds	App. Total	Right	Thru	Left	Peds	App. Total	Int. Total
Peak Hour Analysis From 07:00 AM to 08:45 AM - Peak 1 of 1																					
Peak Hour for Entire Intersection Begins at 07:30 AM																					
07:30 AM	1	0	**2**	0	3	5	151	0	0	156	**1**	0	0	0	**1**	0	124	0	0	124	284
07:45 AM	1	0	1	0	2	5	**181**	0	0	**186**	0	0	0	0	0	0	**139**	**3**	0	**142**	**330**
08:00 AM	**2**	0	2	0	**4**	**10**	142	0	0	152	0	0	0	0	0	0	108	1	0	109	265
08:15 AM	0	0	0	0	0	7	145	0	0	152	0	0	0	0	0	0	123	1	0	124	276
Total Volume	4	0	5	0	9	27	619	0	0	646	1	0	0	0	1	0	494	5	0	499	1155
% App. Total																					
PHF	.500	.000	.625	.000	.563	.675	.855	.000	.000	.868	.250	.000	.000	.000	.250	.000	.888	.417	.000	.879	.875

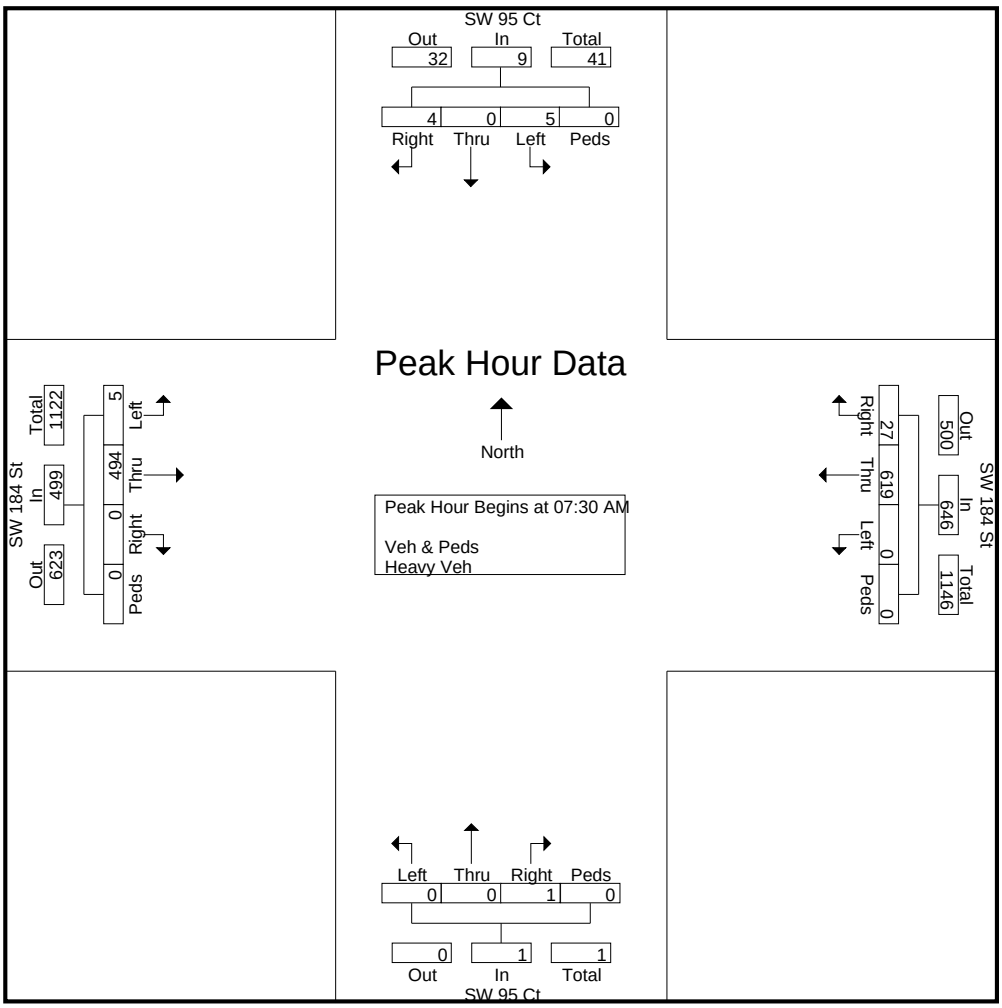

Marlin Engineering Inc.

2191 NW 97th Ave
Doral, FL 33172

Client: Village of Palmetto Bay
Job No.: 2013007.002
Project: DRTF Traffic Impact Analysis
County: Miami-Dade

File Name : SW 95 Ct @ SW 184 St
Site Code : 00000000
Start Date : 2/12/2014
Page No : 4

	SW 95 Ct Southbound					SW 184 St Westbound					SW 95 Ct Northbound					SW 184 St Eastbound					
Start Time	Right	Thru	Left	Peds	App. Total	Right	Thru	Left	Peds	App. Total	Right	Thru	Left	Peds	App. Total	Right	Thru	Left	Peds	App. Total	Int. Total
Peak Hour Analysis From 11:00 AM to 12:45 PM - Peak 1 of 1																					
Peak Hour for Entire Intersection Begins at 11:45 AM																					
11:45 AM	0	0	2	0	2	2	**143**	0	0	**145**	0	0	0	0	0	0	93	0	0	93	**240**
12:00 PM	0	0	0	0	0	0	106	0	0	106	0	0	0	0	0	0	105	1	0	106	212
12:15 PM	**1**	0	1	0	2	2	106	0	0	108	0	0	0	0	0	0	97	**2**	0	99	209
12:30 PM	0	0	**3**	0	**3**	**4**	122	0	**1**	127	0	0	0	**1**	**1**	0	**108**	0	**1**	**109**	240
Total Volume	1	0	6	0	7	8	477	0	1	486	0	0	0	1	1	0	403	3	1	407	901
% App. Total																					
PHF	.250	.000	.500	.000	.583	.500	.834	.000	.250	.838	.000	.000	.000	.250	.250	.000	.933	.375	.250	.933	.939

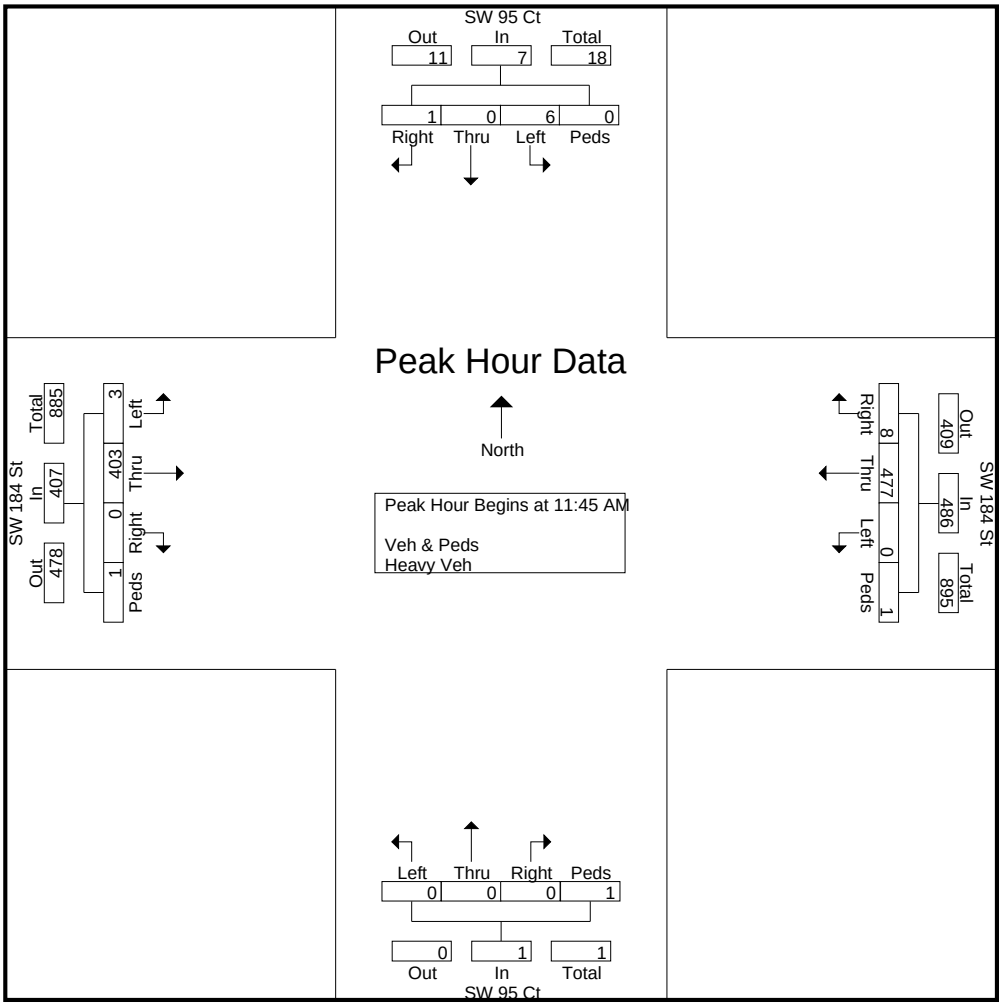

Marlin Engineering Inc.

2191 NW 97th Ave
Doral, FL 33172

Client: Village of Palmetto Bay
Job No.: 2013007.002
Project: DRTF Traffic Impact Analysis
County: Miami-Dade

File Name : SW 95 Ct @ SW 184 St
Site Code : 00000000
Start Date : 2/12/2014
Page No : 5

	SW 95 Ct Southbound					SW 184 St Westbound					SW 95 Ct Northbound					SW 184 St Eastbound					
Start Time	Right	Thru	Left	Peds	App. Total	Right	Thru	Left	Peds	App. Total	Right	Thru	Left	Peds	App. Total	Right	Thru	Left	Peds	App. Total	Int. Total
Peak Hour Analysis From 04:00 PM to 05:45 PM - Peak 1 of 1																					
Peak Hour for Entire Intersection Begins at 04:45 PM																					
04:45 PM	0	0	0	0	0	0	189	**1**	1	191	0	0	0	**2**	**2**	0	147	**2**	0	149	342
05:00 PM	0	0	**2**	0	2	**5**	170	0	0	175	0	0	0	0	0	0	**151**	0	0	**151**	328
05:15 PM	**1**	0	2	**2**	**5**	3	**195**	0	0	**198**	0	0	0	0	0	0	144	1	0	145	**348**
05:30 PM	0	0	1	1	2	1	164	0	**3**	168	0	0	0	0	0	0	140	1	0	141	311
Total Volume	1	0	5	3	9	9	718	1	4	732	0	0	0	2	2	0	582	4	0	586	1329
% App. Total																					
PHF	.250	.000	.625	.375	.450	.450	.921	.250	.333	.924	.000	.000	.000	.250	.250	.000	.964	.500	.000	.970	.955

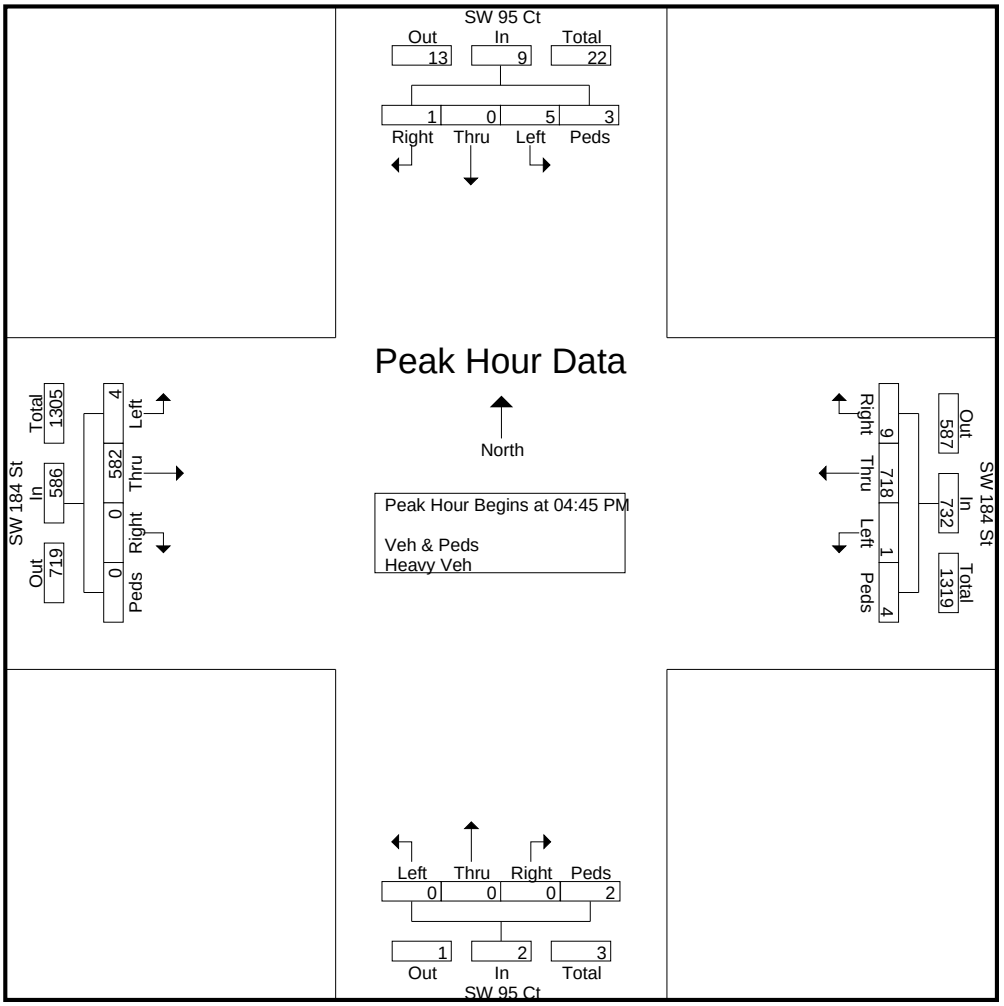

Marlin Engineering Inc.

2191 NW 97th Ave
Doral, FL 33172

Client: Village of Palmetto Bay
Job No.: 2013007.002
Project: DRTF Traffic Impact Analysis
County: Miami-Dade

File Name : US1 @ 184 St
Site Code : 00000000
Start Date : 2/13/2014
Page No : 1

Groups Printed- Veh & Peds - Heavy Veh

	US1 Southbound				SW 184 St Westbound				US1 Northbound				SW 184 St Eastbound				
Start Time	Right	Thru	Left	Peds	Right	Thru	Left	Peds	Right	Thru	Left	Peds	Right	Thru	Left	Peds	Int. Total
07:00 AM	15	120	18	0	0	97	13	0	7	467	4	0	0	63	63	0	867
07:15 AM	22	218	27	0	0	130	17	0	9	512	11	0	1	81	72	0	1100
07:30 AM	33	278	18	0	3	100	30	0	6	470	8	0	2	110	80	0	1138
07:45 AM	25	444	27	0	2	88	68	0	17	478	19	1	0	134	111	1	1415
Total	95	1060	90	0	5	415	128	0	39	1927	42	1	3	388	326	1	4520
08:00 AM	41	228	29	0	1	134	38	0	7	408	13	0	1	108	88	0	1096
08:15 AM	30	253	27	0	3	82	38	0	19	380	3	0	1	98	82	0	1016
08:30 AM	31	234	29	0	10	77	37	0	13	327	0	0	0	74	95	0	927
08:45 AM	27	233	24	0	6	74	35	0	10	289	2	0	0	116	92	0	908
Total	129	948	109	0	20	367	148	0	49	1404	18	0	2	396	357	0	3947
*** BREAK ***																	
11:00 AM	41	316	40	0	1	93	63	0	23	258	27	0	9	75	77	0	1023
11:15 AM	47	377	45	1	5	55	53	0	17	345	40	0	23	59	55	0	1122
11:30 AM	37	391	39	0	9	63	62	0	59	341	34	0	13	76	75	0	1199
11:45 AM	61	337	47	2	6	99	71	0	27	331	15	0	14	75	63	0	1148
Total	186	1421	171	3	21	310	249	0	126	1275	116	0	59	285	270	0	4492
12:00 PM	53	345	52	0	5	92	108	0	34	447	14	0	21	65	63	0	1299
12:15 PM	50	408	41	0	0	86	50	0	23	295	30	0	29	60	59	1	1132
12:30 PM	44	357	43	1	1	74	83	0	12	355	30	0	26	83	75	0	1184
12:45 PM	59	448	40	0	10	88	80	0	44	308	41	0	23	88	59	0	1288
Total	206	1558	176	1	16	340	321	0	113	1405	115	0	99	296	256	1	4903
*** BREAK ***																	
04:00 PM	49	341	62	0	2	43	35	0	59	243	24	0	8	91	59	0	1016
04:15 PM	71	436	41	1	5	81	64	0	45	246	26	0	11	102	51	0	1180
04:30 PM	61	468	46	0	0	82	38	0	91	298	5	0	14	105	51	0	1259
04:45 PM	78	482	43	0	0	33	37	0	55	185	8	0	7	88	57	0	1073
Total	259	1727	192	1	7	239	174	0	250	972	63	0	40	386	218	0	4528
05:00 PM	66	482	44	0	0	76	90	0	85	354	26	0	9	94	53	0	1379
05:15 PM	51	454	42	0	0	58	120	0	65	291	5	0	12	118	56	0	1272
05:30 PM	66	440	60	0	11	101	52	0	49	242	6	0	17	108	41	0	1193
05:45 PM	48	425	46	0	0	66	44	0	108	315	36	0	12	85	36	0	1221
Total	231	1801	192	0	11	301	306	0	307	1202	73	0	50	405	186	0	5065
Grand Total	1106	8515	930	5	80	1972	1326	0	884	8185	427	1	253	2156	1613	2	27455
Apprch %	10.5	80.7	8.8	0	2.4	58.4	39.3	0	9.3	86.2	4.5	0	6.3	53.6	40.1	0	
Total %	4	31	3.4	0	0.3	7.2	4.8	0	3.2	29.8	1.6	0	0.9	7.9	5.9	0	
Veh & Peds	1097	8490	925	5	80	1971	1324	0	878	8107	426	1	250	2126	1611	2	27293
% Veh & Peds	99.2	99.7	99.5	100	100	99.9	99.8	0	99.3	99	99.8	100	98.8	98.6	99.9	100	99.4
Heavy Veh	9	25	5	0	0	1	2	0	6	78	1	0	3	30	2	0	162
% Heavy Veh	0.8	0.3	0.5	0	0	0.1	0.2	0	0.7	1	0.2	0	1.2	1.4	0.1	0	0.6

Marlin Engineering Inc.

2191 NW 97th Ave
Doral, FL 33172

Client: Village of Palmetto Bay
Job No.: 2013007.002
Project: DRTF Traffic Impact Analysis
County: Miami-Dade

File Name : US1 @ 184 St
Site Code : 00000000
Start Date : 2/13/2014
Page No : 2

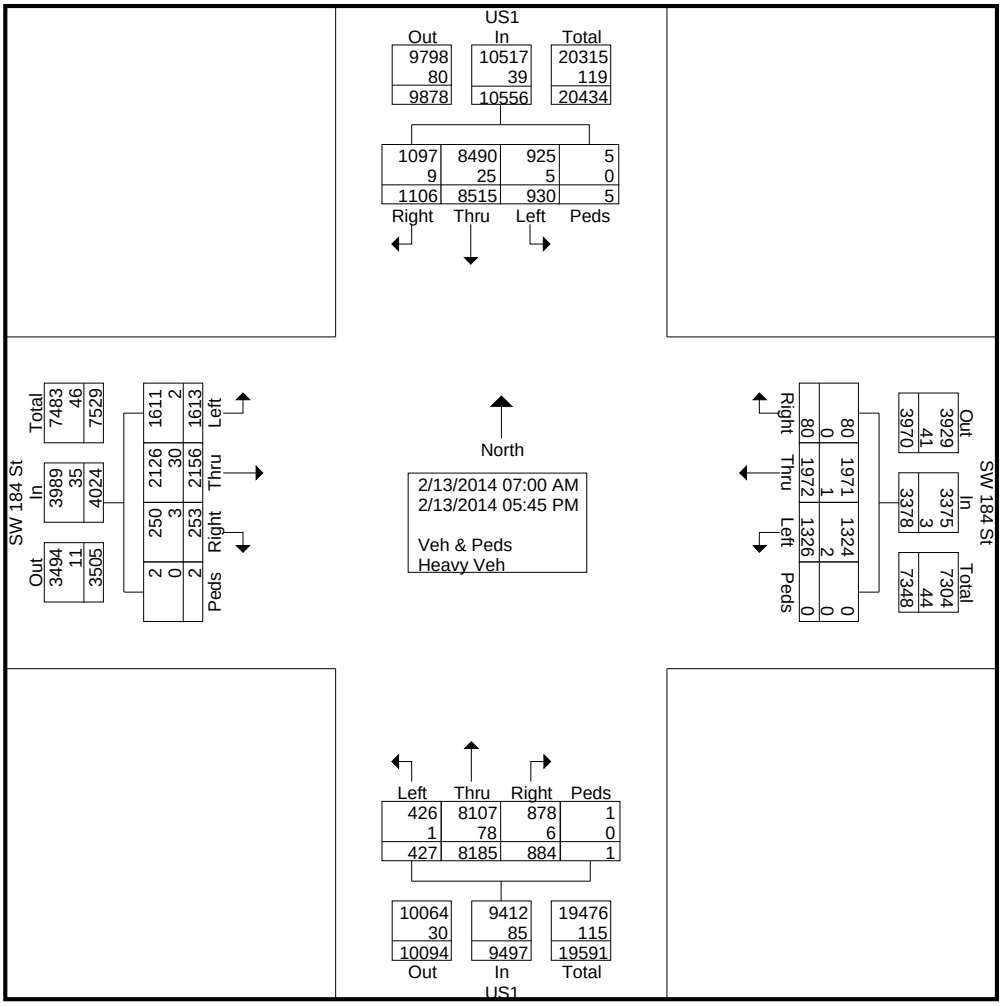

Marlin Engineering Inc.

2191 NW 97th Ave
Doral, FL 33172

Client: Village of Palmetto Bay
Job No.: 2013007.002
Project: DRTF Traffic Impact Analysis
County: Miami-Dade

File Name : US1 @ 184 St
Site Code : 00000000
Start Date : 2/13/2014
Page No : 3

	US1 Southbound					SW 184 St Westbound					US1 Northbound					SW 184 St Eastbound					
Start Time	Right	Thru	Left	Peds	App. Total	Right	Thru	Left	Peds	App. Total	Right	Thru	Left	Peds	App. Total	Right	Thru	Left	Peds	App. Total	Int. Total
Peak Hour Analysis From 07:00 AM to 08:45 AM - Peak 1 of 1																					
Peak Hour for Entire Intersection Begins at 07:15 AM																					
07:15 AM	22	218	27	0	267	0	130	17	0	147	9	**512**	11	0	**532**	1	81	72	0	154	1100
07:30 AM	33	278	18	0	329	**3**	100	30	0	133	6	470	8	0	484	**2**	110	80	0	192	1138
07:45 AM	25	**444**	27	0	**496**	2	88	**68**	0	158	**17**	478	**19**	**1**	515	0	**134**	**111**	**1**	**246**	**1415**
08:00 AM	**41**	228	**29**	0	298	1	**134**	38	0	**173**	7	408	13	0	428	1	108	88	0	197	1096
Total Volume	121	1168	101	0	1390	6	452	153	0	611	39	1868	51	1	1959	4	433	351	1	789	4749
% App. Total	8.7	84	7.3	0		1	74	25	0		2	95.4	2.6	0.1		0.5	54.9	44.5	0.1		
PHF	.738	.658	.871	.000	.701	.500	.843	.563	.000	.883	.574	.912	.671	.250	.921	.500	.808	.791	.250	.802	.839

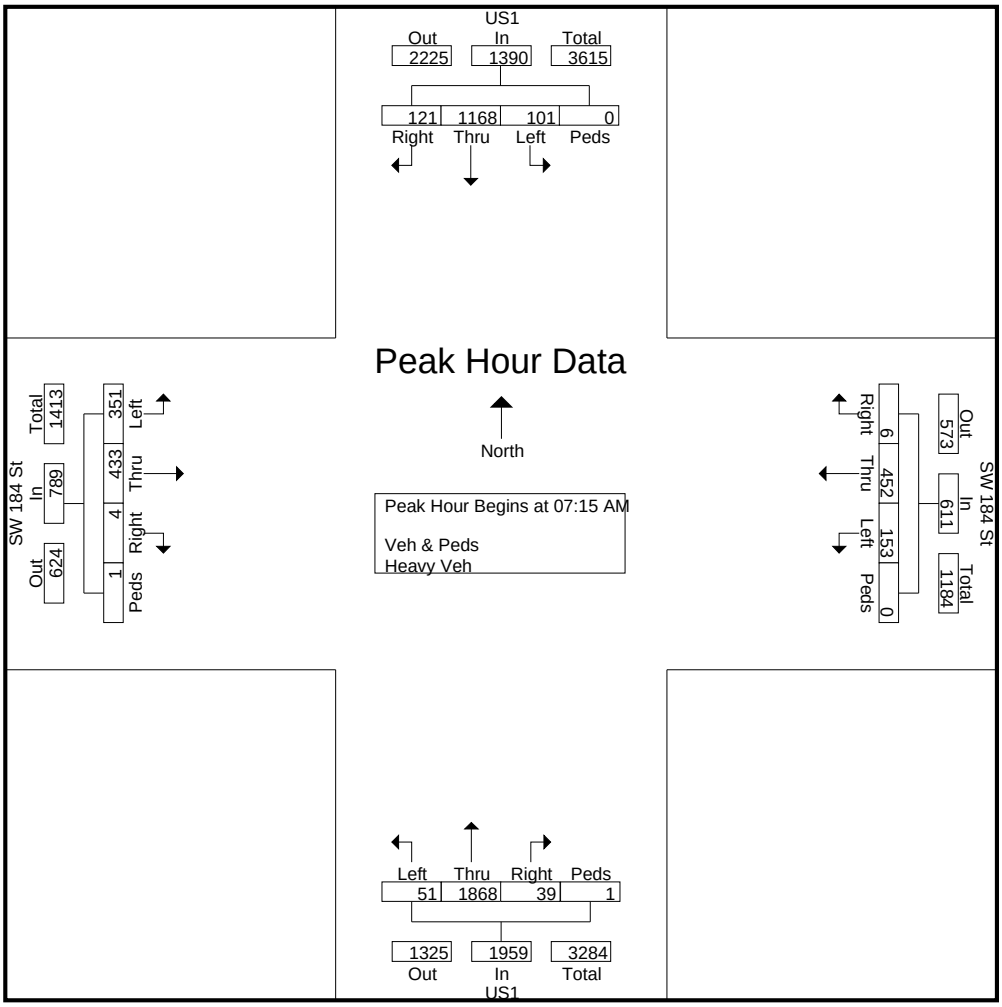

Marlin Engineering Inc.

2191 NW 97th Ave
Doral, FL 33172

Client: Village of Palmetto Bay
Job No.: 2013007.002
Project: DRTF Traffic Impact Analysis
County: Miami-Dade

File Name : US1 @ 184 St
Site Code : 00000000
Start Date : 2/13/2014
Page No : 4

	US1 Southbound					SW 184 St Westbound					US1 Northbound					SW 184 St Eastbound					
Start Time	Right	Thru	Left	Peds	App. Total	Right	Thru	Left	Peds	App. Total	Right	Thru	Left	Peds	App. Total	Right	Thru	Left	Peds	App. Total	Int. Total
Peak Hour Analysis From 11:00 AM to 12:45 PM - Peak 1 of 1																					
Peak Hour for Entire Intersection Begins at 12:00 PM																					
12:00 PM	53	345	**52**	0	450	5	**92**	**108**	0	**205**	34	**447**	14	0	**495**	21	65	63	0	149	**1299**
12:15 PM	50	408	41	0	499	0	86	50	0	136	23	295	30	0	348	**29**	60	59	**1**	149	1132
12:30 PM	44	357	43	**1**	445	1	74	83	0	158	12	355	30	0	397	26	83	**75**	0	**184**	1184
12:45 PM	**59**	**448**	40	0	**547**	**10**	88	80	0	178	**44**	308	**41**	0	393	23	**88**	59	0	170	1288
Total Volume	206	1558	176	1	1941	16	340	321	0	677	113	1405	115	0	1633	99	296	256	1	652	4903
% App. Total	10.6	80.3	9.1	0.1		2.4	50.2	47.4	0		6.9	86	7	0		15.2	45.4	39.3	0.2		
PHF	.873	.869	.846	.250	.887	.400	.924	.743	.000	.826	.642	.786	.701	.000	.825	.853	.841	.853	.250	.886	.944

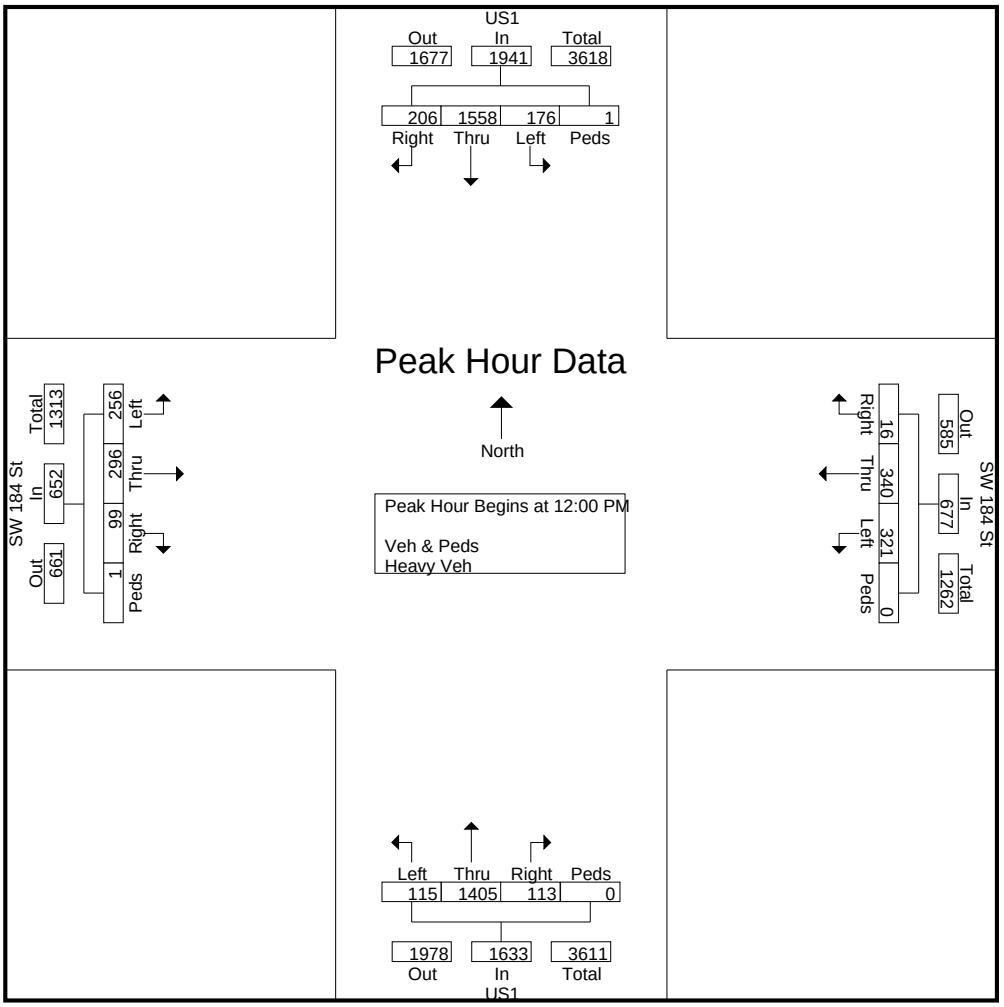

Marlin Engineering Inc.

2191 NW 97th Ave
Doral, FL 33172

Client: Village of Palmetto Bay
Job No.: 2013007.002
Project: DRTF Traffic Impact Analysis
County: Miami-Dade

File Name : US1 @ 184 St
Site Code : 00000000
Start Date : 2/13/2014
Page No : 5

	US1 Southbound					SW 184 St Westbound					US1 Northbound					SW 184 St Eastbound					
Start Time	Right	Thru	Left	Peds	App. Total	Right	Thru	Left	Peds	App. Total	Right	Thru	Left	Peds	App. Total	Right	Thru	Left	Peds	App. Total	Int. Total
Peak Hour Analysis From 04:00 PM to 05:45 PM - Peak 1 of 1																					
Peak Hour for Entire Intersection Begins at 05:00 PM																					
05:00 PM	**66**	**482**	44	0	**592**	0	76	90	0	166	85	**354**	26	0	**465**	9	94	53	0	156	**1379**
05:15 PM	51	454	42	0	547	0	58	**120**	0	**178**	65	291	5	0	361	12	**118**	**56**	0	**186**	1272
05:30 PM	66	440	**60**	0	566	**11**	**101**	52	0	164	49	242	6	0	297	**17**	108	41	0	166	1193
05:45 PM	48	425	46	0	519	0	66	44	0	110	**108**	315	**36**	0	459	12	85	36	0	133	1221
Total Volume	231	1801	192	0	2224	11	301	306	0	618	307	1202	73	0	1582	50	405	186	0	641	5065
% App. Total	10.4	81	8.6	0		1.8	48.7	49.5	0		19.4	76	4.6	0		7.8	63.2	29	0		
PHF	.875	.934	.800	.000	.939	.250	.745	.638	.000	.868	.711	.849	.507	.000	.851	.735	.858	.830	.000	.862	.918

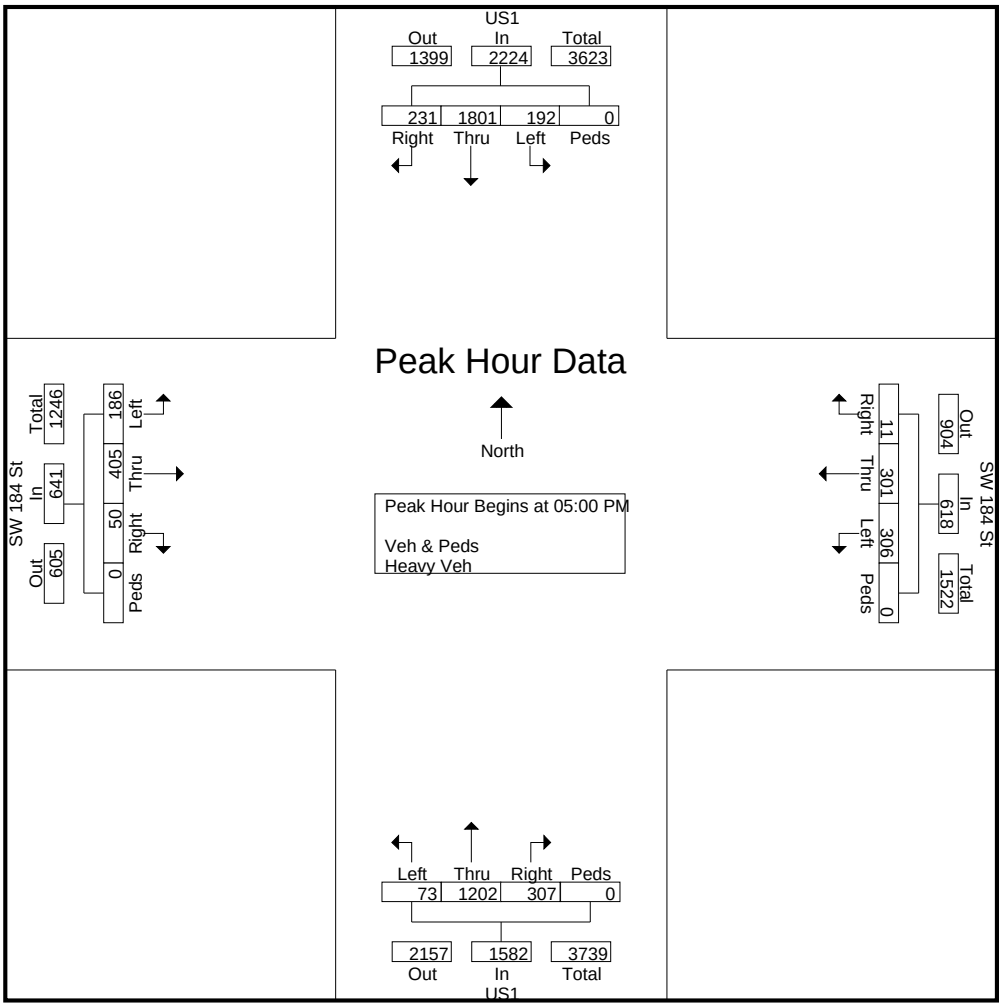

Marlin Engineering Inc.

2191 NW 97th Ave
Doral, FL 33172

Client: Village of Palmetto Bay
Job No.: 2013007.002
Project: DRTF Traffic Impact Analysis
County: Miami-Dade

File Name : US1 @ Wayne Ave
Site Code : 00000000
Start Date : 2/12/2014
Page No : 1

Groups Printed- Veh & Peds - Heavy Veh

	US1 Southbound				Wayne Ave Westbound				US1 Northbound				Wayne Ave Eastbound				
Start Time	Right	Thru	Left	Peds	Right	Thru	Left	Peds	Right	Thru	Left	Peds	Right	Thru	Left	Peds	Int. Total
07:00 AM	0	0	0	0	2	0	0	0	1	570	5	0	0	0	1	0	579
07:15 AM	0	0	0	0	4	2	0	1	5	579	13	0	0	0	4	1	609
07:30 AM	0	0	0	0	1	2	0	0	4	555	6	0	0	1	1	0	570
07:45 AM	0	0	0	0	2	1	0	0	4	575	6	0	0	2	0	0	590
Total	0	0	0	0	9	5	0	1	14	2279	30	0	0	3	6	1	2348
08:00 AM	0	0	0	0	2	0	0	0	6	596	7	1	0	1	8	0	621
08:15 AM	0	0	0	0	2	4	0	0	6	519	9	0	0	3	1	0	544
08:30 AM	0	0	0	0	8	3	0	1	8	562	17	0	0	3	1	0	603
08:45 AM	0	0	0	0	3	3	0	0	4	556	16	0	0	2	3	0	587
Total	0	0	0	0	15	10	0	1	24	2233	49	1	0	9	13	0	2355
*** BREAK ***																	
11:00 AM	0	0	0	0	4	1	0	0	0	398	13	1	0	1	6	0	424
11:15 AM	0	0	0	0	6	1	0	0	3	434	10	0	0	1	9	0	464
11:30 AM	0	0	0	1	2	0	0	0	2	476	16	0	0	1	10	0	508
11:45 AM	0	0	0	1	3	0	0	2	4	435	10	1	0	0	9	2	467
Total	0	0	0	2	15	2	0	2	9	1743	49	2	0	3	34	2	1863
12:00 PM	0	0	0	1	2	0	0	0	1	471	9	0	0	0	6	0	490
12:15 PM	0	0	0	1	4	0	0	0	7	445	20	2	0	2	8	0	489
12:30 PM	0	0	0	1	3	0	0	0	7	470	9	1	0	3	6	0	500
12:45 PM	0	0	0	0	2	4	0	1	4	480	20	2	0	0	13	0	526
Total	0	0	0	3	11	4	0	1	19	1866	58	5	0	5	33	0	2005
*** BREAK ***																	
04:00 PM	0	0	0	0	0	2	0	0	4	392	12	0	0	7	2	0	419
04:15 PM	0	0	0	2	3	0	0	2	3	452	9	0	0	4	13	0	488
04:30 PM	0	0	0	0	6	3	0	1	4	426	7	1	0	6	4	0	458
04:45 PM	0	0	0	0	5	3	0	0	7	419	8	1	0	4	8	1	456
Total	0	0	0	2	14	8	0	3	18	1689	36	2	0	21	27	1	1821
05:00 PM	0	0	0	0	6	4	0	0	4	385	8	0	0	2	4	0	413
05:15 PM	0	0	0	0	4	4	0	0	6	407	9	0	0	6	10	0	446
05:30 PM	0	0	0	0	4	1	0	0	2	438	8	2	0	6	6	1	468
05:45 PM	0	0	0	0	3	1	0	0	4	364	12	1	0	4	7	1	397
Total	0	0	0	0	17	10	0	0	16	1594	37	3	0	18	27	2	1724
Grand Total	0	0	0	7	81	39	0	8	100	11404	259	13	0	59	140	6	12116
Apprch %	0	0	0	100	63.3	30.5	0	6.2	0.8	96.8	2.2	0.1	0	28.8	68.3	2.9	
Total %	0	0	0	0.1	0.7	0.3	0	0.1	0.8	94.1	2.1	0.1	0	0.5	1.2	0	
Veh & Peds	0	0	0	7	76	39	0	8	97	11272	259	13	0	59	139	6	11975
% Veh & Peds	0	0	0	100	93.8	100	0	100	97	98.8	100	100	0	100	99.3	100	98.8
Heavy Veh	0	0	0	0	5	0	0	0	3	132	0	0	0	0	1	0	141
% Heavy Veh	0	0	0	0	6.2	0	0	0	3	1.2	0	0	0	0	0.7	0	1.2

Marlin Engineering Inc.

2191 NW 97th Ave
Doral, FL 33172

Client: Village of Palmetto Bay
Job No.: 2013007.002
Project: DRTF Traffic Impact Analysis
County: Miami-Dade

File Name : US1 @ Wayne Ave
Site Code : 00000000
Start Date : 2/12/2014
Page No : 2

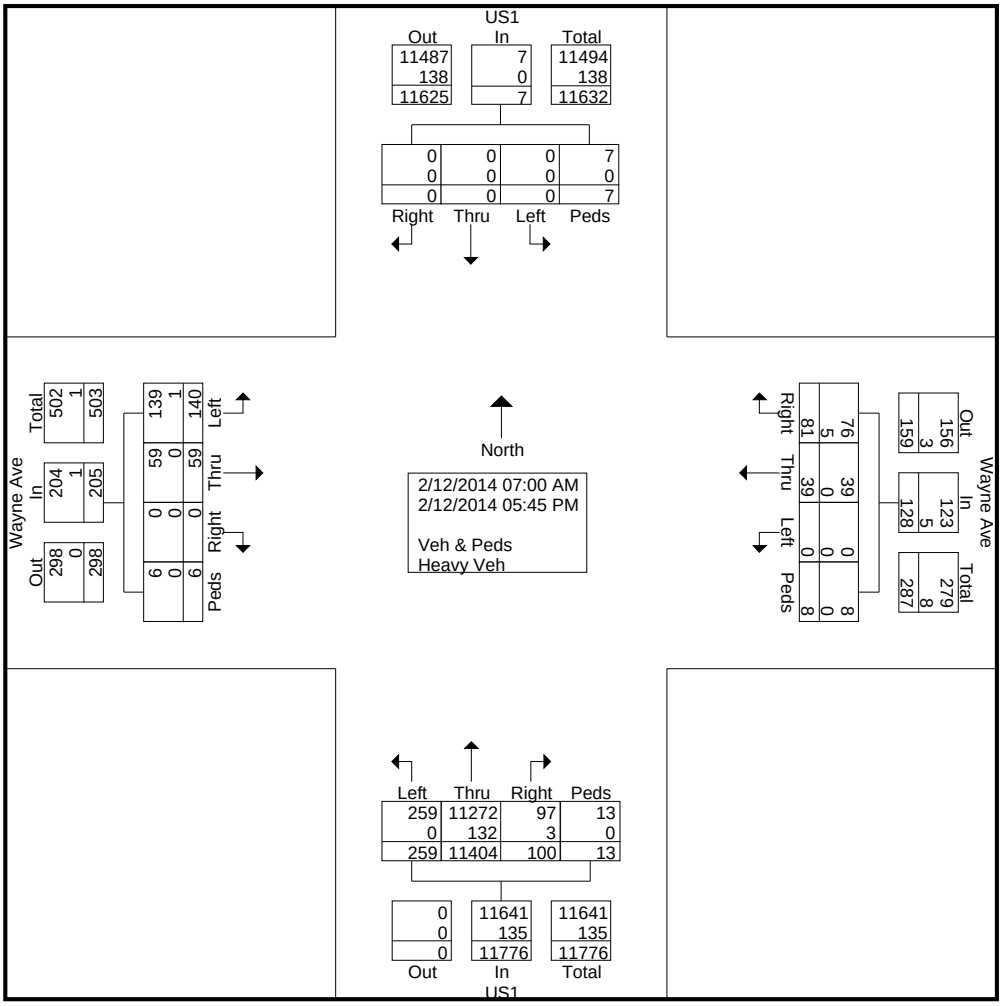

Marlin Engineering Inc.

2191 NW 97th Ave
Doral, FL 33172

Client: Village of Palmetto Bay
Job No.: 2013007.002
Project: DRTF Traffic Impact Analysis
County: Miami-Dade

File Name : US1 @ Wayne Ave
Site Code : 00000000
Start Date : 2/12/2014
Page No : 3

	US1 Southbound					Wayne Ave Westbound					US1 Northbound					Wayne Ave Eastbound					
Start Time	Right	Thru	Left	Peds	App. Total	Right	Thru	Left	Peds	App. Total	Right	Thru	Left	Peds	App. Total	Right	Thru	Left	Peds	App. Total	Int. Total
Peak Hour Analysis From 07:00 AM to 08:45 AM - Peak 1 of 1																					
Peak Hour for Entire Intersection Begins at 07:15 AM																					
07:15 AM	0	0	0	0	0	**4**	**2**	0	**1**	**7**	5	579	**13**	0	597	0	0	4	**1**	5	609
07:30 AM	0	0	0	0	0	1	2	0	0	3	4	555	6	0	565	0	1	1	0	2	570
07:45 AM	0	0	0	0	0	2	1	0	0	3	4	575	6	0	585	0	**2**	0	0	2	590
08:00 AM	0	0	0	0	0	2	0	0	0	2	**6**	**596**	7	**1**	**610**	0	1	**8**	0	**9**	**621**
Total Volume	0	0	0	0	0	9	5	0	1	15	19	2305	32	1	2357	0	4	13	1	18	2390
% App. Total	0	0	0	0		60	33.3	0	6.7		0.8	97.8	1.4	0		0	22.2	72.2	5.6		
PHF	.000	.000	.000	.000	.000	.563	.625	.000	.250	.536	.792	.967	.615	.250	.966	.000	.500	.406	.250	.500	.962

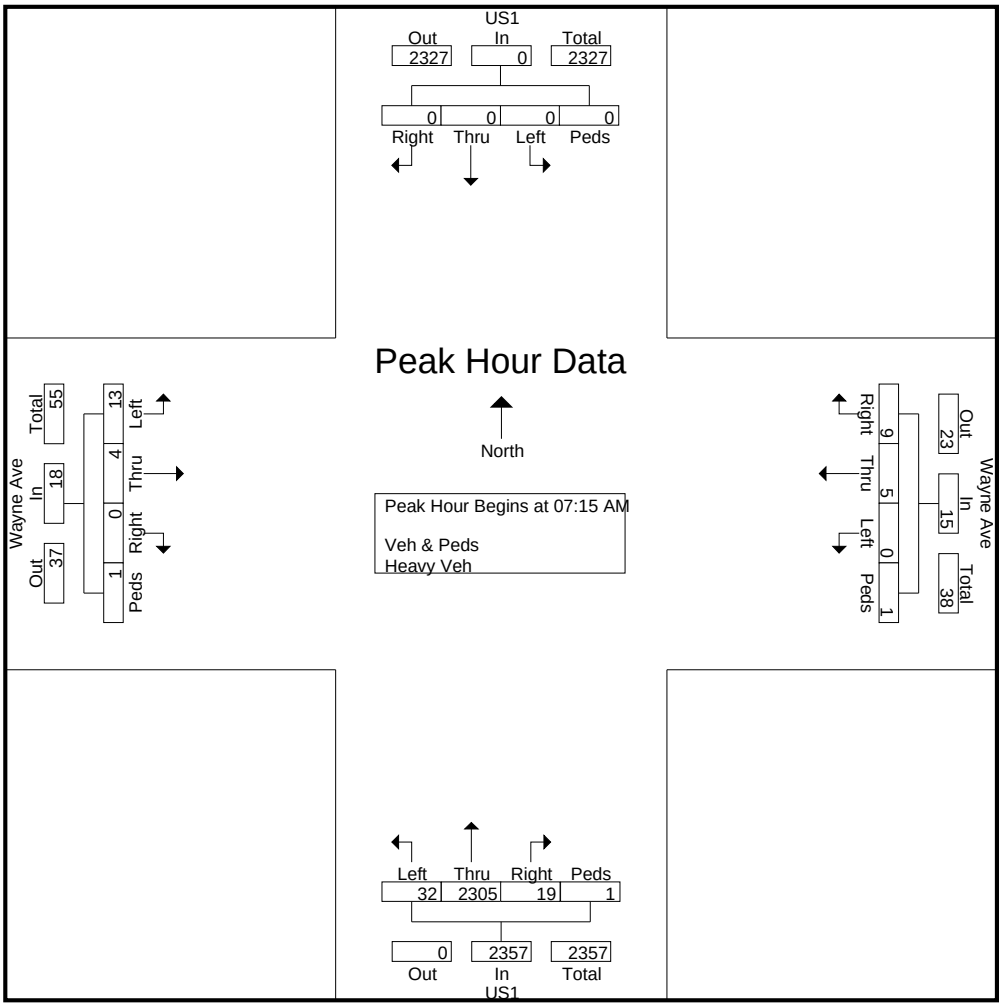

Marlin Engineering Inc.

2191 NW 97th Ave
Doral, FL 33172

Client: Village of Palmetto Bay
Job No.: 2013007.002
Project: DRTF Traffic Impact Analysis
County: Miami-Dade

File Name : US1 @ Wayne Ave
Site Code : 00000000
Start Date : 2/12/2014
Page No : 4

	US1 Southbound					Wayne Ave Westbound					US1 Northbound					Wayne Ave Eastbound					
Start Time	Right	Thru	Left	Peds	App. Total	Right	Thru	Left	Peds	App. Total	Right	Thru	Left	Peds	App. Total	Right	Thru	Left	Peds	App. Total	Int. Total
Peak Hour Analysis From 11:00 AM to 12:45 PM - Peak 1 of 1																					
Peak Hour for Entire Intersection Begins at 12:00 PM																					
12:00 PM	0	0	0	**1**	**1**	2	0	0	0	2	1	471	9	0	481	0	0	6	0	6	490
12:15 PM	0	0	0	1	1	**4**	0	0	0	4	**7**	445	**20**	**2**	474	0	2	8	0	10	489
12:30 PM	0	0	0	1	1	3	0	0	0	3	7	470	9	1	487	0	**3**	6	0	9	500
12:45 PM	0	0	0	0	0	2	**4**	0	**1**	**7**	4	**480**	20	2	**506**	0	0	**13**	0	**13**	**526**
Total Volume	0	0	0	3	3	11	4	0	1	16	19	1866	58	5	1948	0	5	33	0	38	2005
% App. Total	0	0	0	100		68.8	25	0	6.2		1	95.8	3	0.3		0	13.2	86.8	0		
PHF	.000	.000	.000	.750	.750	.688	.250	.000	.250	.571	.679	.972	.725	.625	.962	.000	.417	.635	.000	.731	.953

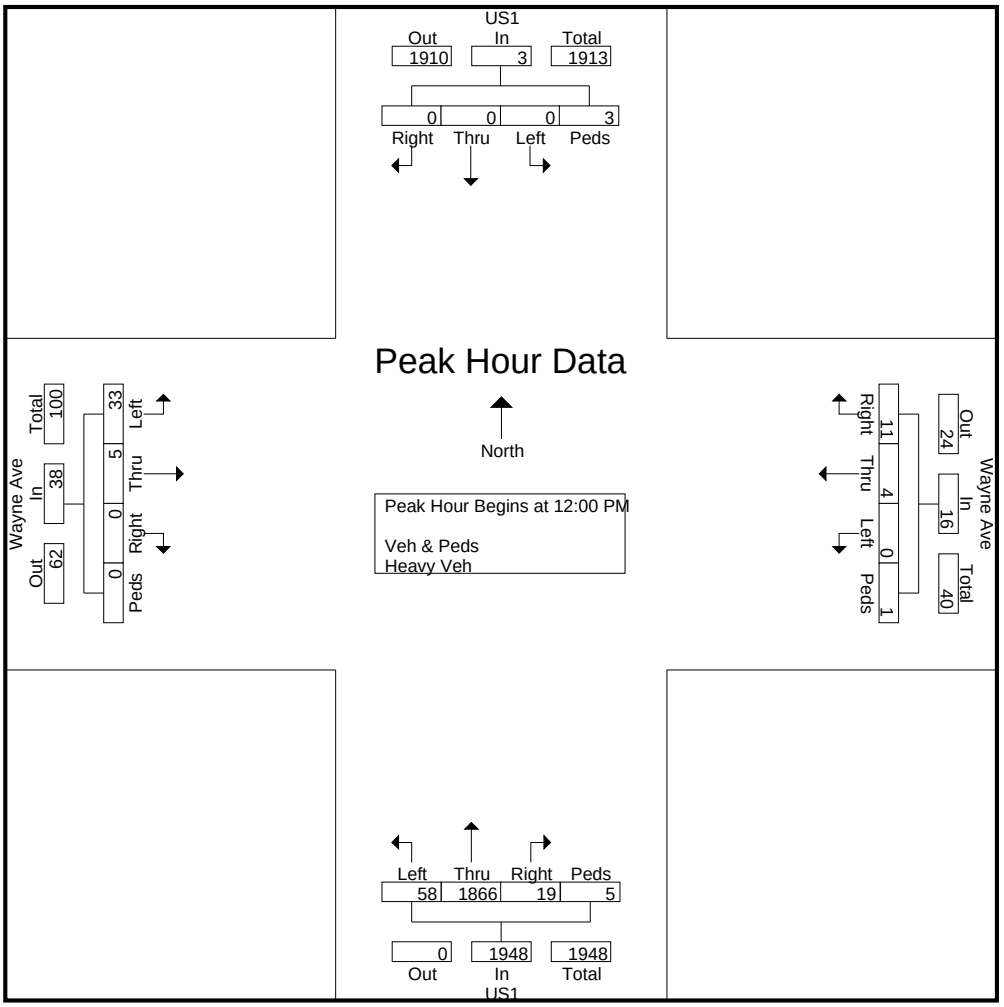

Marlin Engineering Inc.

2191 NW 97th Ave
Doral, FL 33172

Client: Village of Palmetto Bay
Job No.: 2013007.002
Project: DRTF Traffic Impact Analysis
County: Miami-Dade

File Name : US1 @ Wayne Ave
Site Code : 00000000
Start Date : 2/12/2014
Page No : 5

	US1 Southbound					Wayne Ave Westbound					US1 Northbound					Wayne Ave Eastbound					
Start Time	Right	Thru	Left	Peds	App. Total	Right	Thru	Left	Peds	App. Total	Right	Thru	Left	Peds	App. Total	Right	Thru	Left	Peds	App. Total	Int. Total
Peak Hour Analysis From 04:00 PM to 05:45 PM - Peak 1 of 1																					
Peak Hour for Entire Intersection Begins at 04:00 PM																					
04:00 PM	0	0	0	0	0	0	2	0	0	2	4	392	**12**	0	408	0	**7**	2	0	9	419
04:15 PM	0	0	0	**2**	**2**	3	0	0	**2**	5	3	**452**	9	0	**464**	0	4	**13**	0	**17**	**488**
04:30 PM	0	0	0	0	0	**6**	**3**	0	1	**10**	4	426	7	**1**	438	0	6	4	0	10	458
04:45 PM	0	0	0	0	0	5	3	0	0	8	**7**	419	8	1	435	0	4	8	**1**	13	456
Total Volume	0	0	0	2	2	14	8	0	3	25	18	1689	36	2	1745	0	21	27	1	49	1821
% App. Total	0	0	0	100		56	32	0	12		1	96.8	2.1	0.1		0	42.9	55.1	2		
PHF	.000	.000	.000	.250	.250	.583	.667	.000	.375	.625	.643	.934	.750	.500	.940	.000	.750	.519	.250	.721	.933

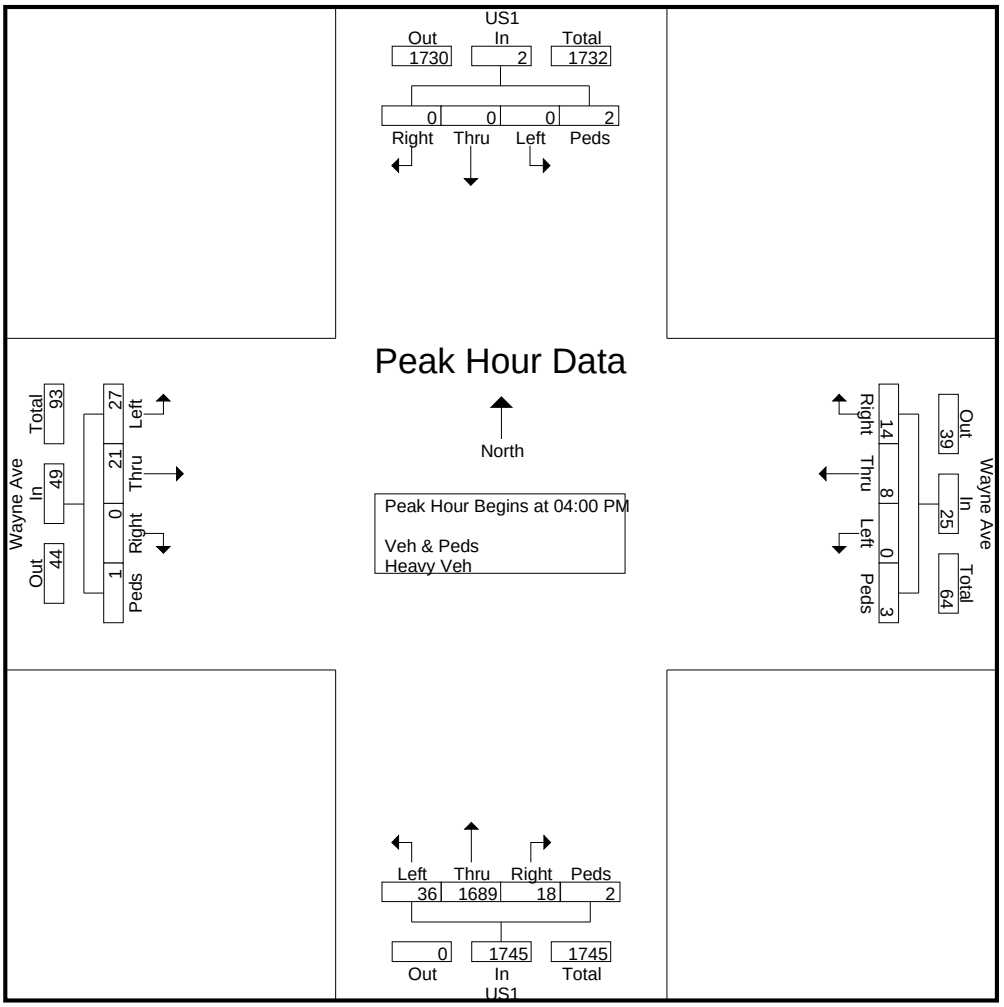

Marlin Engineering Inc.

2191 NW 97th Ave
Doral, FL 33172

Client: Village of Palmetto Bay
Job No.: 2013007.002
Project: DRTF Traffic Impact Analysis
County: Miami-Dade

File Name : US1 @ Indigo St
Site Code : 00000000
Start Date : 2/12/2014
Page No : 1

Groups Printed- Veh & Peds - Heavy Veh

	US1 Southbound					Indigo St Westbound					US1 Northbound					Indigo St Eastbound					
Start Time	Right	Thru	Left	Peds	App. Total	Right	Thru	Left	Peds	App. Total	Right	Thru	Left	Peds	App. Total	Right	Thru	Left	Peds	App. Total	Int. Total
07:00 AM	0	1	0	0	1	0	0	0	0	0	0	464	0	0	464	0	2	0	0	2	467
07:15 AM	0	0	0	0	0	0	3	0	0	3	6	619	2	0	627	0	3	1	0	4	634
07:30 AM	0	0	0	0	0	2	1	0	1	4	2	601	2	0	605	0	1	0	0	1	610
07:45 AM	0	0	0	0	0	8	5	0	0	13	9	477	0	0	486	0	3	0	0	3	502
Total	0	1	0	0	1	10	9	0	1	20	17	2161	4	0	2182	0	9	1	0	10	2213
08:00 AM	0	0	0	0	0	1	1	0	0	2	4	628	1	0	633	0	3	1	0	4	639
08:15 AM	0	0	0	0	0	0	0	0	0	0	4	533	0	0	537	0	0	0	0	0	537
08:30 AM	0	0	0	0	0	1	5	0	0	6	2	436	0	0	438	0	0	0	0	0	444
08:45 AM	0	0	0	0	0	0	4	0	0	4	4	705	0	0	709	0	2	0	0	2	715
Total	0	0	0	0	0	2	10	0	0	12	14	2302	1	0	2317	0	5	1	0	6	2335
*** BREAK ***																					
11:00 AM	0	0	0	0	0	1	1	0	0	2	3	373	0	0	376	0	2	0	0	2	380
11:15 AM	0	0	0	0	0	0	4	0	0	4	0	531	0	0	531	0	1	0	0	1	536
11:30 AM	0	0	0	0	0	0	0	0	0	0	0	623	1	0	624	0	1	0	0	1	625
11:45 AM	0	0	0	0	0	0	0	0	0	0	0	551	0	0	551	0	2	0	0	2	553
Total	0	0	0	0	0	1	5	0	0	6	3	2078	1	0	2082	0	6	0	0	6	2094
12:00 PM	0	0	0	0	0	0	0	0	0	0	4	493	1	0	498	0	0	0	0	0	498
12:15 PM	0	0	0	0	0	0	0	0	0	0	0	466	0	0	466	0	0	0	0	0	466
12:30 PM	0	0	0	0	0	0	0	0	0	0	0	512	0	0	512	0	0	0	0	0	512
12:45 PM	0	0	0	0	0	1	2	1	0	4	0	484	0	0	484	0	0	0	0	0	488
Total	0	0	0	0	0	1	2	1	0	4	4	1955	1	0	1960	0	0	0	0	0	1964
*** BREAK ***																					
04:00 PM	1	0	0	0	1	0	1	0	0	1	0	344	0	0	344	0	1	0	0	1	347
04:15 PM	0	0	0	0	0	0	0	0	0	0	5	475	1	0	481	0	9	0	0	9	490
04:30 PM	0	0	0	0	0	0	2	0	0	2	2	480	0	0	482	0	13	0	0	13	497
04:45 PM	0	0	0	0	0	0	0	0	0	0	0	504	0	0	504	0	1	0	0	1	505
Total	1	0	0	0	1	0	3	0	0	3	7	1803	1	0	1811	0	24	0	0	24	1839
05:00 PM	0	0	0	0	0	1	0	0	0	1	0	324	0	0	324	0	17	0	0	17	342
05:15 PM	0	0	0	0	0	0	0	0	0	0	0	457	0	0	457	0	1	0	0	1	458
05:30 PM	0	0	0	0	0	0	1	0	0	1	0	432	0	0	432	0	0	0	0	0	433
05:45 PM	0	0	0	0	0	0	1	0	0	1	0	478	0	0	478	0	1	1	0	2	481
Total	0	0	0	0	0	1	2	0	0	3	0	1691	0	0	1691	0	19	1	0	20	1714
Grand Total	1	1	0	0	2	15	31	1	1	48	45	11990	8	0	12043	0	63	3	0	66	12159
Apprch %	50	50	0	0		31.2	64.6	2.1	2.1		0.4	99.6	0.1	0		0	95.5	4.5	0		
Total %	0	0	0	0	0	0.1	0.3	0	0	0.4	0.4	98.6	0.1	0	99	0	0.5	0	0	0.5	
Veh & Peds	1	1	0	0	2	15	31	1	1	48	43	11820	8	0	11871	0	63	3	0	66	11987
% Veh & Peds	100	100	0	0	100	100	100	100	100	100	95.6	98.6	100	0	98.6	0	100	100	0	100	98.6
Heavy Veh	0	0	0	0	0	0	0	0	0	0	2	170	0	0	172	0	0	0	0	0	172
% Heavy Veh	0	0	0	0	0	0	0	0	0	0	4.4	1.4	0	0	1.4	0	0	0	0	0	1.4

Marlin Engineering Inc.

2191 NW 97th Ave
Doral, FL 33172

Client: Village of Palmetto Bay
Job No.: 2013007.002
Project: DRTF Traffic Impact Analysis
County: Miami-Dade

File Name : US1 @ Indigo St
Site Code : 00000000
Start Date : 2/12/2014
Page No : 2

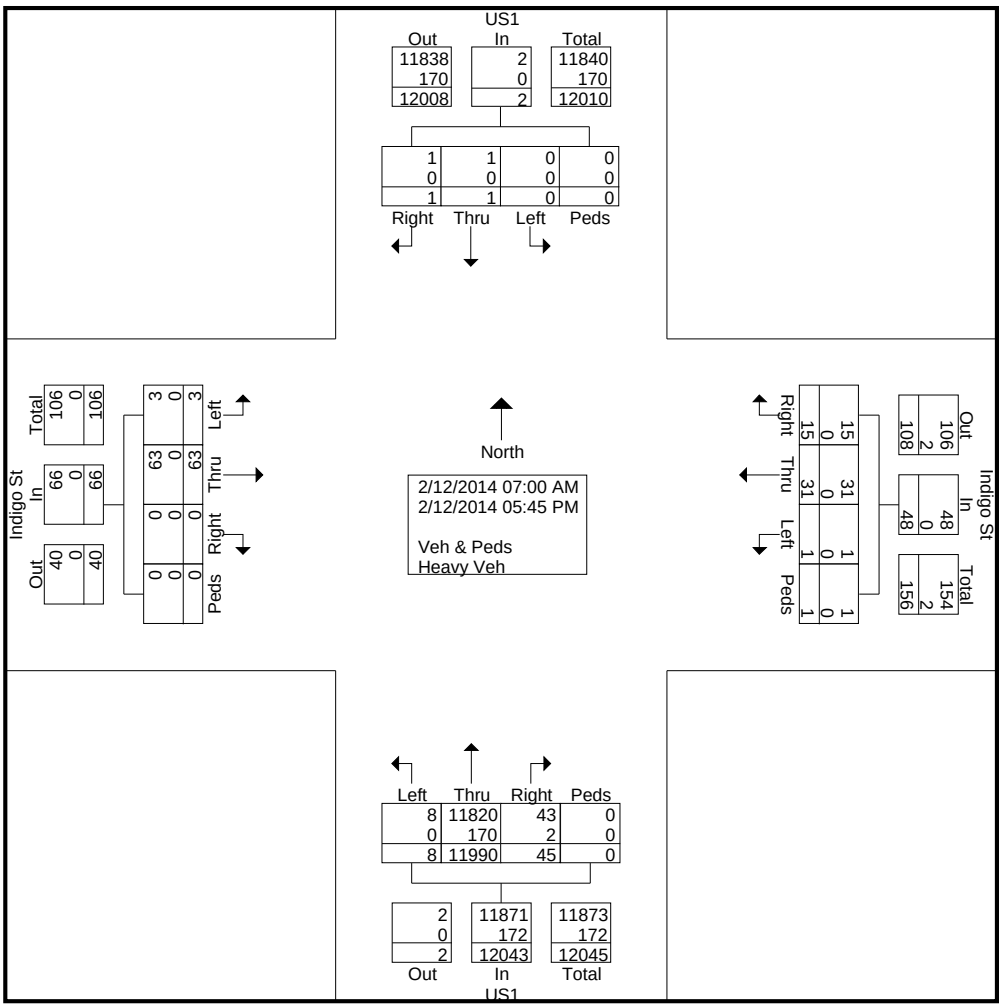

Marlin Engineering Inc.

2191 NW 97th Ave
Doral, FL 33172

Client: Village of Palmetto Bay
Job No.: 2013007.002
Project: DRTF Traffic Impact Analysis
County: Miami-Dade

File Name : US1 @ Indigo St
Site Code : 00000000
Start Date : 2/12/2014
Page No : 3

	US1 Southbound					Indigo St Westbound					US1 Northbound					Indigo St Eastbound					
Start Time	Right	Thru	Left	Peds	App. Total	Right	Thru	Left	Peds	App. Total	Right	Thru	Left	Peds	App. Total	Right	Thru	Left	Peds	App. Total	Int. Total
Peak Hour Analysis From 07:00 AM to 08:45 AM - Peak 1 of 1																					
Peak Hour for Entire Intersection Begins at 07:15 AM																					
07:15 AM	0	0	0	0	0	0	3	0	0	3	6	619	**2**	0	627	0	**3**	**1**	0	**4**	634
07:30 AM	0	0	0	0	0	2	1	0	**1**	4	2	601	2	0	605	0	1	0	0	1	610
07:45 AM	0	0	0	0	0	**8**	**5**	0	0	**13**	**9**	477	0	0	486	0	3	0	0	3	502
08:00 AM	0	0	0	0	0	1	1	0	0	2	4	**628**	1	0	**633**	0	3	1	0	4	**639**
Total Volume	0	0	0	0	0	11	10	0	1	22	21	2325	5	0	2351	0	10	2	0	12	2385
% App. Total	0	0	0	0		50	45.5	0	4.5		0.9	98.9	0.2	0		0	83.3	16.7	0		
PHF	.000	.000	.000	.000	.000	.344	.500	.000	.250	.423	.583	.926	.625	.000	.929	.000	.833	.500	.000	.750	.933

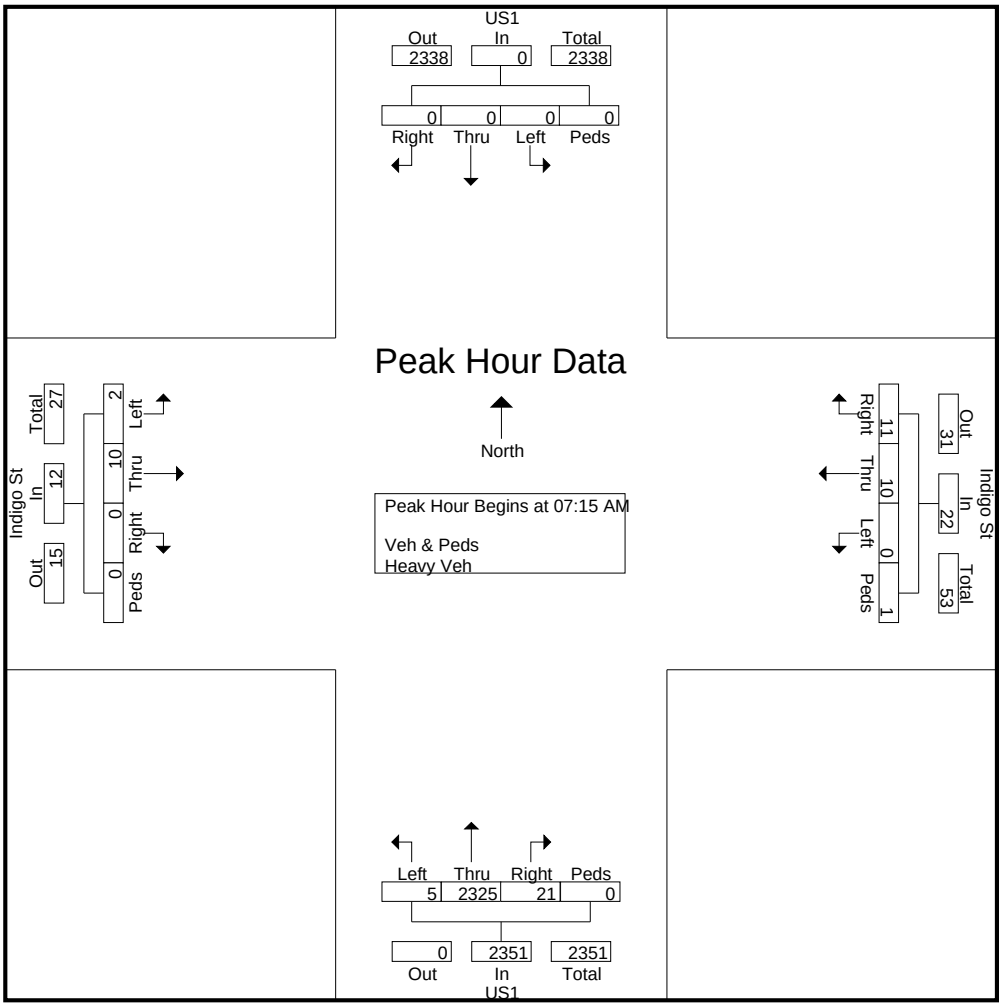

Marlin Engineering Inc.

2191 NW 97th Ave
Doral, FL 33172

Client: Village of Palmetto Bay
Job No.: 2013007.002
Project: DRTF Traffic Impact Analysis
County: Miami-Dade

File Name : US1 @ Indigo St
Site Code : 00000000
Start Date : 2/12/2014
Page No : 4

	US1 Southbound					Indigo St Westbound					US1 Northbound					Indigo St Eastbound					
Start Time	Right	Thru	Left	Peds	App. Total	Right	Thru	Left	Peds	App. Total	Right	Thru	Left	Peds	App. Total	Right	Thru	Left	Peds	App. Total	Int. Total
Peak Hour Analysis From 11:00 AM to 12:45 PM - Peak 1 of 1																					
Peak Hour for Entire Intersection Begins at 11:15 AM																					
11:15 AM	0	0	0	0	0	0	**4**	0	0	**4**	0	531	0	0	531	0	1	0	0	1	536
11:30 AM	0	0	0	0	0	0	0	0	0	0	0	**623**	**1**	0	**624**	0	1	0	0	1	**625**
11:45 AM	0	0	0	0	0	0	0	0	0	0	0	551	0	0	551	0	**2**	0	0	**2**	553
12:00 PM	0	0	0	0	0	0	0	0	0	0	**4**	493	1	0	498	0	0	0	0	0	498
Total Volume	0	0	0	0	0	0	4	0	0	4	4	2198	2	0	2204	0	4	0	0	4	2212
% App. Total	0	0	0	0		0	100	0	0		0.2	99.7	0.1	0		0	100	0	0		
PHF	.000	.000	.000	.000	.000	.000	.250	.000	.000	.250	.250	.882	.500	.000	.883	.000	.500	.000	.000	.500	.885

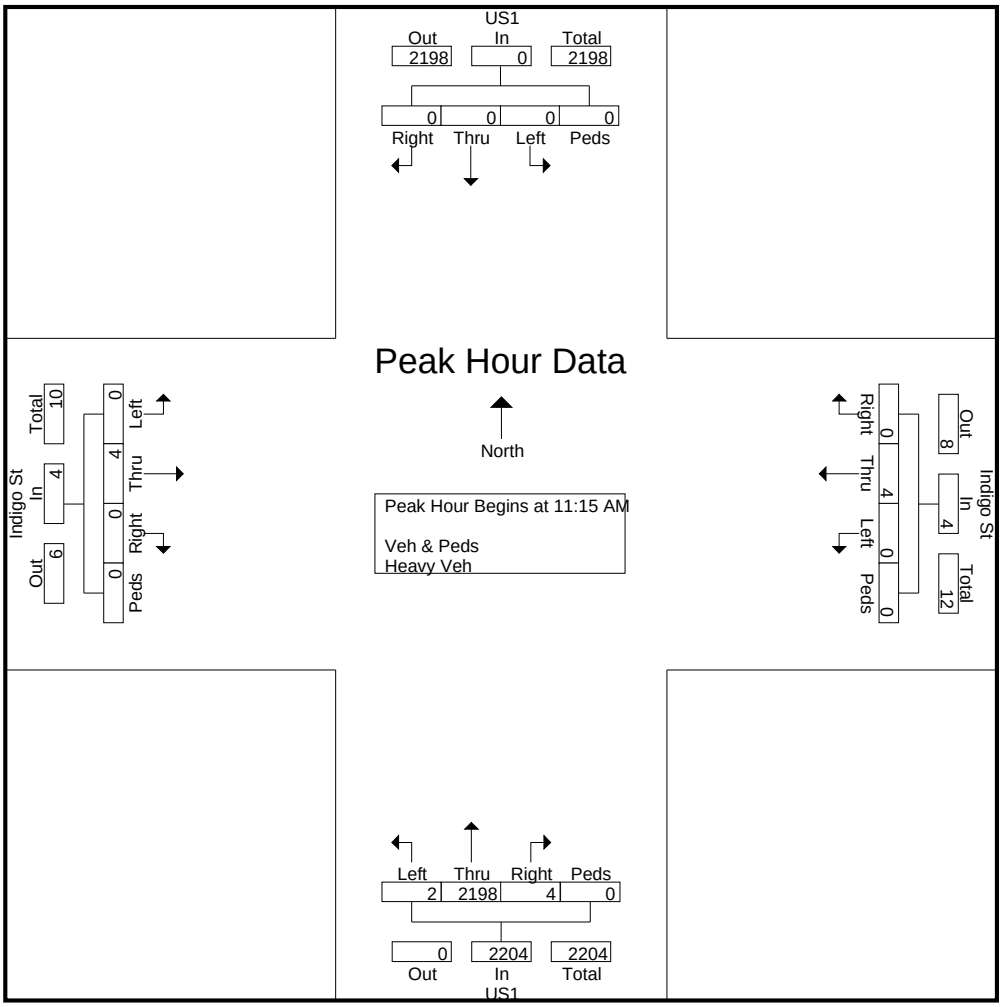

Marlin Engineering Inc.

2191 NW 97th Ave
Doral, FL 33172

Client: Village of Palmetto Bay
Job No.: 2013007.002
Project: DRTF Traffic Impact Analysis
County: Miami-Dade

File Name : US1 @ Indigo St
Site Code : 00000000
Start Date : 2/12/2014
Page No : 5

	US1 Southbound					Indigo St Westbound					US1 Northbound					Indigo St Eastbound					
Start Time	Right	Thru	Left	Peds	App. Total	Right	Thru	Left	Peds	App. Total	Right	Thru	Left	Peds	App. Total	Right	Thru	Left	Peds	App. Total	Int. Total
Peak Hour Analysis From 04:00 PM to 05:45 PM - Peak 1 of 1																					
Peak Hour for Entire Intersection Begins at 04:00 PM																					
04:00 PM	**1**	0	0	0	**1**	0	1	0	0	1	0	344	0	0	344	0	1	0	0	1	347
04:15 PM	0	0	0	0	0	0	0	0	0	0	**5**	475	**1**	0	481	0	9	0	0	9	490
04:30 PM	0	0	0	0	0	0	**2**	0	0	**2**	2	480	0	0	482	0	**13**	0	0	**13**	497
04:45 PM	0	0	0	0	0	0	0	0	0	0	0	**504**	0	0	**504**	0	1	0	0	1	**505**
Total Volume	1	0	0	0	1	0	3	0	0	3	7	1803	1	0	1811	0	24	0	0	24	1839
% App. Total	100	0	0	0		0	100	0	0		0.4	99.6	0.1	0		0	100	0	0		
PHF	.250	.000	.000	.000	.250	.000	.375	.000	.000	.375	.350	.894	.250	.000	.898	.000	.462	.000	.000	.462	.910

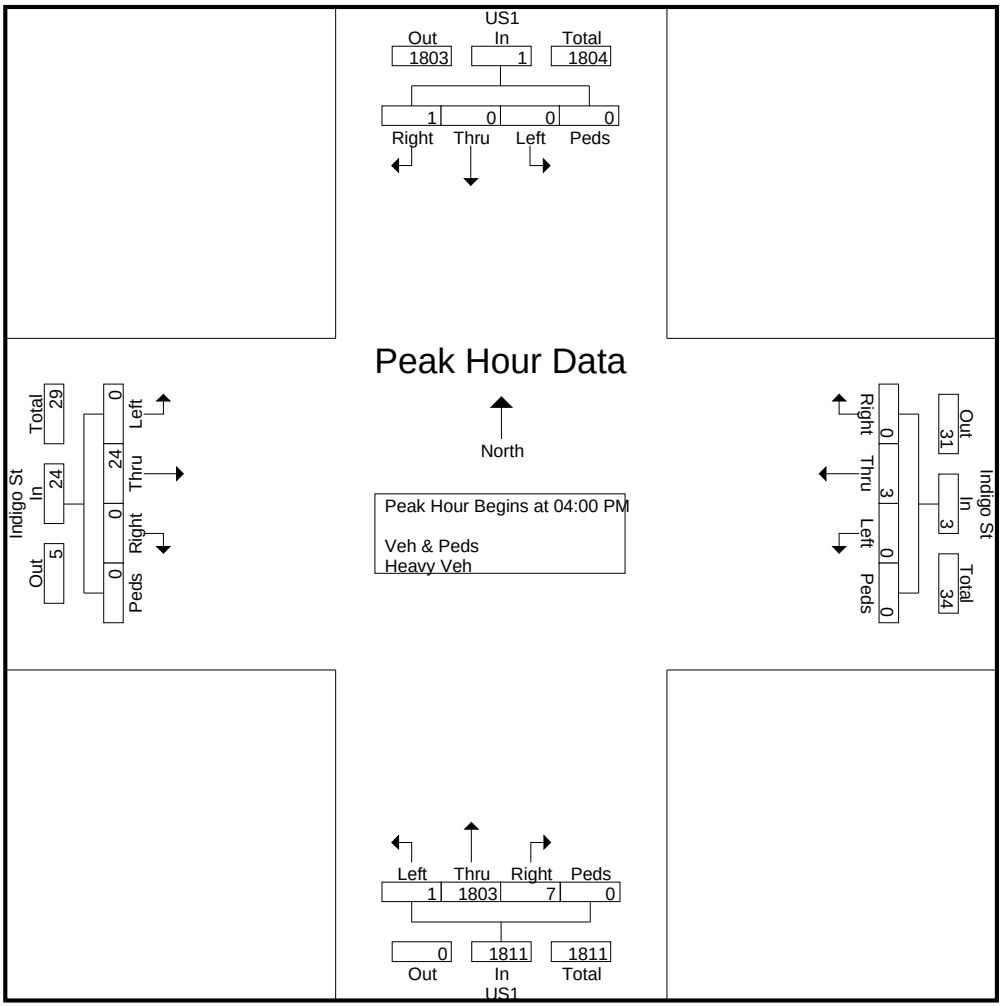

TABLE 7

Generalized **Peak Hour Directional** Volumes for Florida's **Urbanized Areas**[1]

12/18/12

INTERRUPTED FLOW FACILITIES

STATE SIGNALIZED ARTERIALS

Class I (40 mph or higher posted speed limit)

Lanes	Median	B	C	D	E
1	Undivided	*	830	880	**
2	Divided	*	1,910	2,000	**
3	Divided	*	2,940	3,020	**
4	Divided	*	3,970	4,040	**

Class II (35 mph or slower posted speed limit)

Lanes	Median	B	C	D	E
1	Undivided	*	370	750	800
2	Divided	*	730	1,630	1,700
3	Divided	*	1,170	2,520	2,560
4	Divided	*	1,610	3,390	3,420

Non-State Signalized Roadway Adjustments

(Alter corresponding state volumes by the indicated percent.)

Non-State Signalized Roadways - 10%

Median & Turn Lane Adjustments

Lanes	Median	Exclusive Left Lanes	Exclusive Right Lanes	Adjustment Factors
1	Divided	Yes	No	+5%
1	Undivided	No	No	-20%
Multi	Undivided	Yes	No	-5%
Multi	Undivided	No	No	-25%
–	–	–	Yes	+ 5%

One-Way Facility Adjustment

Multiply the corresponding directional volumes in this table by 1.2

BICYCLE MODE[2]

(Multiply motorized vehicle volumes shown below by number of directional roadway lanes to determine two-way maximum service volumes.)

Paved Shoulder/Bicycle Lane Coverage	B	C	D	E
0-49%	*	150	390	1,000
50-84%	110	340	1,000	>1,000
85-100%	470	1,000	>1,000	**

PEDESTRIAN MODE[2]

(Multiply motorized vehicle volumes shown below by number of directional roadway lanes to determine two-way maximum service volumes.)

Sidewalk Coverage	B	C	D	E
0-49%	*	*	140	480
50-84%	*	80	440	800
85-100%	200	540	880	>1,000

BUS MODE (Scheduled Fixed Route)[3]

(Buses in peak hour in peak direction)

Sidewalk Coverage	B	C	D	E
0-84%	> 5	≥ 4	≥ 3	≥ 2
85-100%	> 4	≥ 3	≥ 2	≥ 1

UNINTERRUPTED FLOW FACILITIES

FREEWAYS

Lanes	B	C	D	E
2	2,260	3,020	3,660	3,940
3	3,360	4,580	5,500	6,080
4	4,500	6,080	7,320	8,220
5	5,660	7,680	9,220	10,360
6	7,900	10,320	12,060	12,500

Freeway Adjustments

Auxiliary Lane	Ramp Metering
+ 1,000	+ 5%

UNINTERRUPTED FLOW HIGHWAYS

Lanes	Median	B	C	D	E
1	Undivided	420	840	1,190	1,640
2	Divided	1,810	2,560	3,240	3,590
3	Divided	2,720	3,840	4,860	5,380

Uninterrupted Flow Highway Adjustments

Lanes	Median	Exclusive left lanes	Adjustment factors
1	Divided	Yes	+5%
Multi	Undivided	Yes	-5%
Multi	Undivided	No	-25%

[1] Values shown are presented as peak hour directional volumes for levels of service and are for the automobile/truck modes unless specifically stated. This table does not constitute a standard and should be used only for general planning applications. The computer models from which this table is derived should be used for more specific planning applications. The table and deriving computer models should not be used for corridor or intersection design, where more refined techniques exist. Calculations are based on planning applications of the Highway Capacity Manual and the Transit Capacity and Quality of Service Manual.

[2] Level of service for the bicycle and pedestrian modes in this table is based on number of motorized vehicles, not number of bicyclists or pedestrians using the facility.

[3] Buses per hour shown are only for the peak hour in the single direction of the higher traffic flow.

* Cannot be achieved using table input value defaults.

** Not applicable for that level of service letter grade. For the automobile mode, volumes greater than level of service D become F because intersection capacities have been reached. For the bicycle mode, the level of service letter grade (including F) is not achievable because there is no maximum vehicle volume threshold using table input value defaults.

Source:
Florida Department of Transportation
Systems Planning Office
www.dot.state.fl.us/planning/systems/sm/los/default.shtm

2013 PEAK SEASON FACTOR CATEGORY REPORT - REPORT TYPE: ALL
CATEGORY: 8700 MIAMI-DADE NORTH

MOCF: 0.97

WEEK	DATES	SF	PSCF
1	01/01/2013 - 01/05/2013	1.03	1.06
2	01/06/2013 - 01/12/2013	1.03	1.06
3	01/13/2013 - 01/19/2013	1.03	1.06
4	01/20/2013 - 01/26/2013	1.01	1.04
5	01/27/2013 - 02/02/2013	1.00	1.03
6	02/03/2013 - 02/09/2013	0.99	1.02
* 7	02/10/2013 - 02/16/2013	0.97	1.00
* 8	02/17/2013 - 02/23/2013	0.96	0.99
* 9	02/24/2013 - 03/02/2013	0.96	0.99
*10	03/03/2013 - 03/09/2013	0.96	0.99
*11	03/10/2013 - 03/16/2013	0.96	0.99
*12	03/17/2013 - 03/23/2013	0.97	1.00
*13	03/24/2013 - 03/30/2013	0.97	1.00
*14	03/31/2013 - 04/06/2013	0.97	1.00
*15	04/07/2013 - 04/13/2013	0.98	1.01
*16	04/14/2013 - 04/20/2013	0.98	1.01
*17	04/21/2013 - 04/27/2013	0.98	1.01
*18	04/28/2013 - 05/04/2013	0.99	1.02
*19	05/05/2013 - 05/11/2013	0.99	1.02
20	05/12/2013 - 05/18/2013	1.00	1.03
21	05/19/2013 - 05/25/2013	1.00	1.03
22	05/26/2013 - 06/01/2013	1.00	1.03
23	06/02/2013 - 06/08/2013	1.01	1.04
24	06/09/2013 - 06/15/2013	1.01	1.04
25	06/16/2013 - 06/22/2013	1.02	1.05
26	06/23/2013 - 06/29/2013	1.02	1.05
27	06/30/2013 - 07/06/2013	1.03	1.06
28	07/07/2013 - 07/13/2013	1.04	1.07
29	07/14/2013 - 07/20/2013	1.05	1.08
30	07/21/2013 - 07/27/2013	1.04	1.07
31	07/28/2013 - 08/03/2013	1.03	1.06
32	08/04/2013 - 08/10/2013	1.03	1.06
33	08/11/2013 - 08/17/2013	1.02	1.05
34	08/18/2013 - 08/24/2013	1.02	1.05
35	08/25/2013 - 08/31/2013	1.02	1.05
36	09/01/2013 - 09/07/2013	1.02	1.05
37	09/08/2013 - 09/14/2013	1.02	1.05
38	09/15/2013 - 09/21/2013	1.02	1.05
39	09/22/2013 - 09/28/2013	1.02	1.05
40	09/29/2013 - 10/05/2013	1.01	1.04
41	10/06/2013 - 10/12/2013	1.01	1.04
42	10/13/2013 - 10/19/2013	1.01	1.04
43	10/20/2013 - 10/26/2013	1.01	1.04
44	10/27/2013 - 11/02/2013	1.01	1.04
45	11/03/2013 - 11/09/2013	1.01	1.04
46	11/10/2013 - 11/16/2013	1.01	1.04
47	11/17/2013 - 11/23/2013	1.02	1.05
48	11/24/2013 - 11/30/2013	1.02	1.05
49	12/01/2013 - 12/07/2013	1.02	1.05
50	12/08/2013 - 12/14/2013	1.02	1.05
51	12/15/2013 - 12/21/2013	1.03	1.06
52	12/22/2013 - 12/28/2013	1.03	1.06
53	12/29/2013 - 12/31/2013	1.03	1.06

* PEAK SEASON

Appendix C

Signal Timing

STATE PROJECT NO.
87100-3575
W.P.I. NO. 6114172

FLORIDA DEPARTMENT OF TRANSPORTATION

SIGNAL HEAD & SIGNS DETAILS

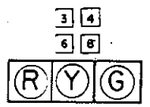

ITEM NO. 650-1-131
8 -REQ'D.

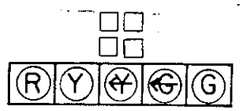

ITEM NO. 650-1-151
NOT -REQ'D.

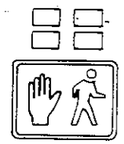

ITEM NO. 653-171
NOT -REQ'D.

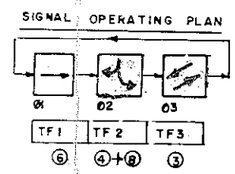

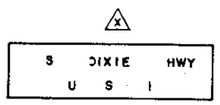

ITEM NO. 700-48-11
D3-1S, 3 -REQ'D.

ITEM NO. 700-48-11
D3-1S, 1 -REQ'D.

NOT -REQ'D. R10-4B

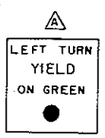

ITEM NO. 700-48-11
NOT-REQ'D. R10-12

REMOVAL PAY ITEMS

[9	EA]	690-10
[	EA]	690-20
[2	EA]	690-30
[	EA]	690-31
[	EA]	690-40
[1	EA]	690-50
[	EA]	690-60
[	EA]	690-70
[1	EA]	690-80
[1	PI]	690-90
[	LF]	690-91
[1	PI]	690-100

NOTES:

1. DEMAND WATTAGE FOR THIS INTERSECTION IS 1105 WATTS.
2. F.P.L. REPRESENTATIVE MR. ERNESTO ROJAS TEL. 258-7224
3. S.B.T. REPRESENTATIVE MR. ED HANCE TEL. 252-5155
4. LOUVERS SHALL BE PROVIDED ON MVMT 4 SIGNAL HEADS. THE TYPE OF LOUVER USED SHALL RESTRICT THE ANGLE OF VISIBILITY TO APPROXIMATELY 15° EITHER SIDE OF THE C.L. OF THE LENS.

DETECTORS FOR LOOPS

MVMT NO.	NO. OF LOOPS	NO. OF DETS.
3	1	1
4+8	2	---

CONTROLLER OPERATIONS

1. MAJOR STREET IS US 1, MINOR STREET IS FRANJO RD
2. STD SIGNAL OPERATING PLAN ____ or [SOP AS SHOWN]
3. PHASE(S) 2,3 ACTUATED, PHASE 1 RECALL
4. MOVEMENT(S) — IS(ARE) PROTECTED/PERMISSIVE
5. SIGNAL COORDINATION PHASE IS 1
6. FLASHING OPERATION: 6 YELLOW; 3,4+8 RED
7. WIRE CONTROLLER TO SKIP PHASE(S) —

CONTROLLER TIMINGS

TIMING INTERVAL	TIMING FUNCTION 1	2	3	4	5	6	7	8
MINIMUM GREEN (INITIAL)								
EXTENSION (PASSAGE)								
MAXIMUM GREEN 1								
MAXIMUM GREEN 2								
YELLOW								
ALL RED								
PEDESTRIAN "WALK"								
PEDESTRIAN CLEAR								

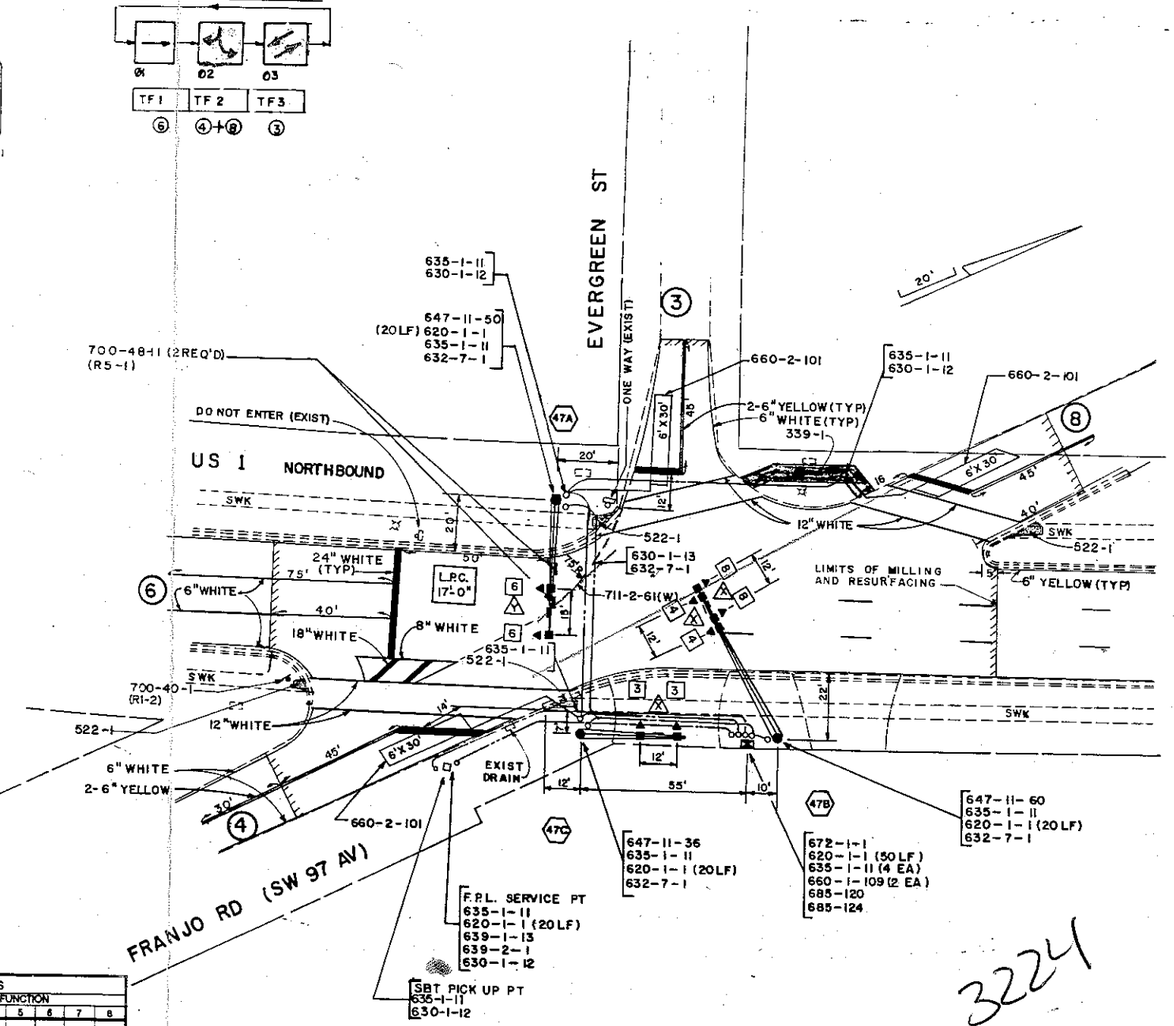

48 HOURS BEFORE DIGGING
CALL TOLL FREE
1-800-432-4770
U.N.C.L.E. UNDERGROUND UTILITIES NOTIFICATION CENTER

SIGNALIZATION SECT 12

US 1 & FRANJO ROAD & EVERGREEN ST

INTERSECTION I.D. # 3224 SHEET T-49 OF T-58

4 of 11 12

SIGNAL OPERATING PLAN

N

Timing Phases	Direction / Head No.	NEB 6	SEB 3	NB 4	SB 8	Ped Heads	Movements/Display/Actuation
	Dwell						
	Clear to						
(6) NEB US-1 (Recall)	Dwell	G	R	R	R		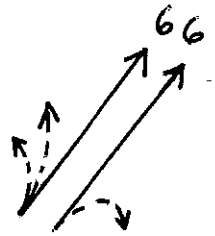
	(3)	Y	R	R	R		
	(4+8)	Y	R	R	R		
	Clear to						
(3) SEB EVERGREEN (Actuated)	Dwell	R	G	R	R		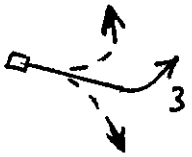
	(4+8)	R	Y	R	R		
	(6)	R	Y	R	R		
	Clear to						
(4+8) N/S FRANJO RD (Actuated)	Dwell	R	R	G	G		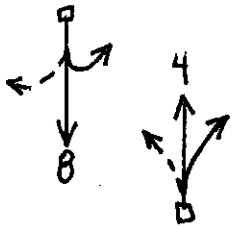
	(6)	R	R	Y	Y		
	Clear to						
	Dwell						
	Clear to						
	Dwell						
	Clear to						
Flashing Operation		FY	FR	FR	FR		Page 1 of 1

Miami-Dade County Public Works Department

Drawn	Date	FRANJO RD, US-1 & EVERGREEN ST			
	3/24/06				
Checked	Date	Placed in Service		Phasing No.	Asset Number
H. HERNANDEZ	3/28/06	Date 2006	By SHOP	6	3224

Blank12

TOD Schedule Report

for 3224: Franjo Rd&US 1&Evergreen St

Print Date: 8/17/2013

Print Time: 2:39 PM

Asset	Intersection	TOD Schedule	Op Mode	Plan #	Cycle	Offset	TOD Setting	Active PhaseBank	Active Maximum
3224	Franjo Rd&US 1&Evergreen St	DOW-7		N/A	0	0	N/A	0	Max 0

Splits

PH 1	PH 2	PH 3	PH 4	PH 5	PH 6	PH 7	PH 8
-	-	EBT	NBT	-	NET	-	SBT
0	0	0	0	0	0	0	0

Active Phase Bank: Phase Bank 1

Phase		Walk (Phase Bank 1 2 3)	Don't Walk (1 2 3)	Min Initial (1 2 3)	Veh Ext (1 2 3)	Max Limit (1 2 3)	Max 2 (1 2 3)	Yellow	Red
1	-	0 - 0 - 0	0 - 0 - 0	0 - 0 - 0	0 - 0 - 0	0 - 0 - 0	0 - 0 - 0	0	0
2	-	0 - 0 - 0	0 - 0 - 0	0 - 0 - 0	0 - 0 - 0	0 - 0 - 0	0 - 0 - 0	0	0
3	EBT	0 - 0 - 0	0 - 0 - 0	7 - 7 - 7	2.5 - 2.5 - 2.5	10 - 10 - 10	15 - 7 - 15	4	1
4	NBT	0 - 0 - 0	0 - 0 - 0	7 - 7 - 7	3.5 - 3.5 - 3.5	13 - 14 - 13	35 - 15 - 30	4	1
5	-	0 - 0 - 0	0 - 0 - 0	0 - 0 - 0	0 - 0 - 0	0 - 0 - 0	0 - 0 - 0	0	0
6	NET	0 - 0 - 0	0 - 0 - 0	16 - 16 - 16	1 - 1 - 1	40 - 50 - 45	0 - 50 - 45	4	1
7	-	0 - 0 - 0	0 - 0 - 0	0 - 0 - 0	0 - 0 - 0	0 - 0 - 0	0 - 0 - 0	0	0
8	SBT	0 - 0 - 0	0 - 0 - 0	7 - 7 - 7	3.5 - 3.5 - 3.5	13 - 14 - 13	35 - 15 - 30	4	1

Last In Service Date: unknown

Permitted Phases

	12345678
Default	--34-6-8
External Permit 0	--------
External Permit 1	--------
External Permit 2	--------

Current TOD Schedule	Plan	Cycle	Green Time 1 -	2 -	3 EBT	4 NBT	5 -	6 NET	7 -	8 SBT	Ring Offset	Offset
	1	170	0	0	10	21	0	124	0	21	0	153
	2	170	0	0	10	36	0	109	0	36	0	128
	4	110	0	0	8	15	0	72	0	15	0	88
	5	140	0	0	10	22	0	93	0	22	0	16
	7	110	0	0	8	17	0	70	0	17	0	105
	8	130	0	0	7	22	0	86	0	22	0	110
	9	180	0	0	8	8	0	149	0	8	0	169
	10	130	0	0	7	20	0	88	0	20	0	72
	11	140	0	0	12	27	0	86	0	27	0	26
	13	130	0	0	7	20	0	88	0	20	0	33
	14	140	0	0	10	27	0	88	0	27	0	119
	15	160	0	0	15	20	0	110	0	20	0	122
	16	190	0	0	15	26	0	134	0	26	0	66
	17	150	0	0	10	30	0	95	0	30	0	29
	18	170	0	0	10	25	0	120	0	25	0	162
	19	130	0	0	7	22	0	86	0	22	0	110
	20	170	0	0	10	30	0	115	0	30	0	135
	21	140	0	0	12	29	0	84	0	29	0	138
	22	110	0	0	8	17	0	70	0	17	0	105
	23	160	0	0	10	30	0	105	0	30	0	26
	25	180	0	0	10	30	0	125	0	30	0	135

Local TOD Schedule

Time	Plan	DOW
0000	Free	Su M T W Th F S
0500	4	Su M T W Th F S
0530	7	M T W Th F
0600	7	Su S
0600	18	M T W Th F
0630	22	Su S
0630	20	M T W Th F
0745	10	S
0800	2	M T W Th F
0830	10	Su
0930	10	M T W Th F
1000	11	Su S
1100	17	S
1145	14	M T W Th F
1200	17	Su
1430	17	M T W Th F
1505	15	M T W Th F
1600	16	M T W Th F
1630	11	Su
1830	5	Su
1830	11	S
1900	5	M T W Th F
1930	5	S
2100	13	Su M T W Th F S
2200	Free	Su M T W Th F S

Current Time of Day Function

Time	Function	Settings *	Day of Week
0000	TOD OUTPUTS	-------1	SuM T W ThF S
0130	TOD OUTPUTS	-----3--	SuM T W ThF S
0500	TOD OUTPUTS	--------	SuM T W ThF S
2200	TOD OUTPUTS	------2-	SuM T W ThF S

Local Time of Day Function

Time	Function	Settings *	Day of Week
0000	TOD OUTPUTS	-------1	SuM T W ThF S
0130	TOD OUTPUTS	-----3--	SuM T W ThF S
0500	TOD OUTPUTS	--------	SuM T W ThF S
2200	TOD OUTPUTS	------2-	SuM T W ThF S

*** Settings**

Blank - FREE - Phase Bank 1, Max 1
Blank - Plan - Phase Bank 1, Max 2
1 - Phase Bank 2, Max 1
2 - Phase Bank 2, Max 2
3 - Phase Bank 3, Max 1
4 - Phase Bank 3, Max 2
5 - EXTERNAL PERMIT 1
6 - EXTERNAL PERMIT 2
7 - X-PED OMIT
8 - TBA

No Calendar Defined/Enabled

DADE COUNTY PUBLIC WORKS DEPT.
HIGHWAY DIVISION
PROJECT NO. 662257 SHEET 27 OF 27

DETAIL OF SIGNAL HEADS

1 3 5 7

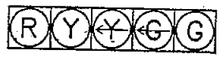

5-SECTION, 1-WAY
12"STD. LENS
W/MOUNTING HARDWARE
ITEM NO. 650-1-151
4 REQUIRED

2 4 6

3-SECTION, 1-WAY
12"STD. LENS
W/MOUNTING HARDWARE
ITEM NO. 650-1-131
3-REQUIRED

P2 P4 P6 P8

1-SEC., 1-WAY

ITEM NO. 653-171
8 REQUIRED

5-SECTION, 1-WAY
12" STD. LENS
W/ MOUNTING HARDWARE
ITEM NO. 650-1-151
1- REQUIRED

STREET NAME SIGNS

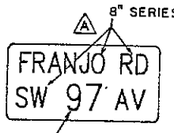

24"X46"
2 REQUIRED

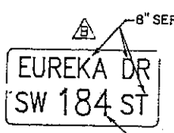

24" X 48"
2 REQUIRED

ITEM NO. 700-84-1
D3-1S

R10-4
COST INCLUDED
ITEM NO. 665-11
4 REQUIRED

CONTROLLER OPERATIONS

1. MAJOR STREET IS FRANTO RD, MINOR STREET IS EUREKA DR
2. STD SIGNAL OPERATING PLAN 10 W/DUAL MODE PED. FEATURE
3. PHASE(S) 1,2,4,5,6 ACTUATED, PHASE 3 RECALL
4. MOVEMENT(S) 1,3,5,7 IS(ARE) PROTECTED/PERMISSIVE
5. SIGNAL COORDINATION PHASE IS 3.
6. FLASHING OPERATION 2+6 YELLOW 4+8 RED
7. WIRE PROGRAM CONTROLLER TO SKIP MOVEMENT(S) 1,3,5,7.
8. TERMINATE INTERCONNECT CONDUIT IN PULL BOX AT PROJECT LIMIT.

NOTES:

1. RUN INTERCONNECT IN CONDUIT TO CONTROLLERS AT U.S. 1 & SW 184 ST. (APPROXIMATELY 2000 L.F. OF 2-2" PVC CONDUITS.)
2. PULL BOXES TO BE LOCATED (BEHIND CURB & GUTTER) AT APPROXIMATELY 250' INTERVALS. (8 PULL BOXES REQ'D.

CONTROLLER TIMINGS

TIMING INTERVAL	TIMING FUNTION 1	2	3	4	5	6	7	8
MINIMUM GREEN (INITIAL)								
EXTENSION (PASSAGE)								
MAXIMUN GREEN 1								
MAXIMUM GREEN 2								
YELLOW								
ALL RED								
PEDESTRIAN "WALK"								
PEDESTRIAN CLEAR								

DETECTORS FOR LOOPS

MVM'T NO.	NO. OF LOOPS	NO. OF DETS.
1	1	1
2	2	1
3	1	1
5	1	1
6	2	1
7	1	1

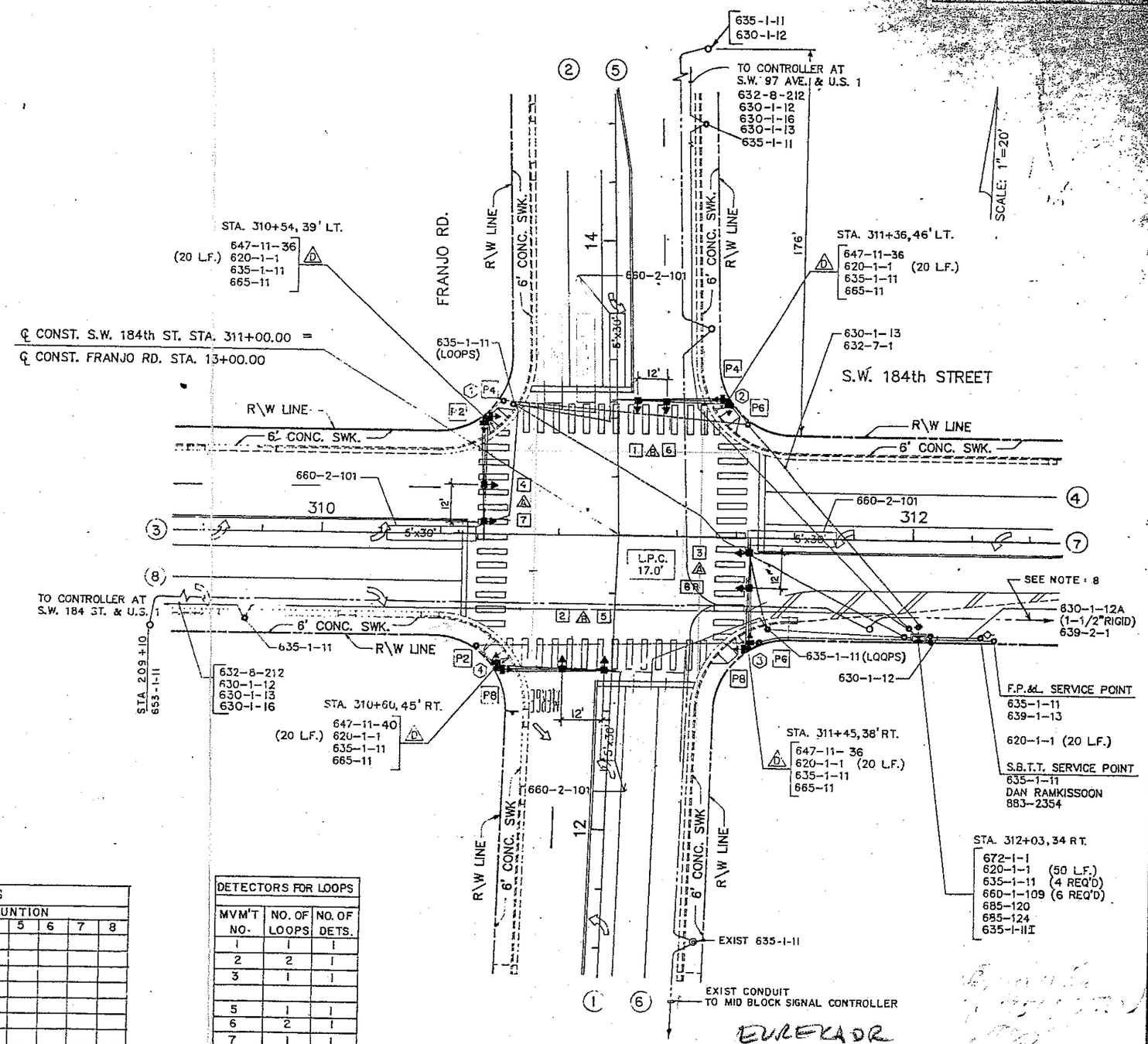

EUREKA DR

S.W. 184 ST. & S.W. 97 AVE.

INTERSECTION IDENTIFICATION NO. 2938

Sec. #216

REVISIONS								
DATE	BY	DESCRIPTION	DATE	BY	DESCRIPTION	DATE	BY	DESCRIPTION

	NAME	DATE		NAME	DATE
DESIGNED BY			DESIGNED BY		
CHECKED BY			CHECKED BY		
SUPERVISED BY					

APPROVED BY

DATE:

CARR SMITH ASSOCIATES

SIGNALIZATION PLAN

REPRODUCIBLE

SIGNAL OPERATING PLAN

Signal Head Number

Phase	Clear To	1	2	3	4	5	6	7	8R			P2	P4	P6	P8			Drawing
	R/W	R	R	←R	R	R	R	←R	R			DW	DW	DW	DW			
Φ3+7	Φ3+8	R	R	←R	R	R	R	←R	R			DW	DW	DW	DW			
EWLT	Φ4+7	R	R	←R	R	R	R	←R	R			DW	DW	DW	DW			
	Φ4+8	R	R	←R	R	R	R	←R	R			DW	DW	DW	DW			
SW 184ST.	Φ1+5	R	R	←R	R	R	R	←R	R			DW	DW	DW	DW			
	Φ1+6	R	R	←R	R	R	R	←R	R			DW	DW	DW	DW			
	Φ2+5	R	R	←R	R	R	R	←R	R			DW	DW	DW	DW			
(ACTUATED)	Φ2+6	R	R	←R	R	R	R	←R	R			DW	DW	DW	DW			
	R/W	R	R	←G	R	R	R	R	G			DW	DW	DW	DW			
Φ3+8	Φ4+8	R	R	←G	R	R	R	R	G			DW	DW	DW	DW			
E/B	Φ1+5	R	R	←Y	R	R	R	R	Y			DW	DW	DW	DW			
	Φ1+6	R	R	←Y	R	R	R	R	Y			DW	DW	DW	DW			
SW 184ST.	Φ2+5	R	R	←Y	R	R	R	R	Y			DW	DW	DW	DW			
	Φ2+6	R	R	←Y	R	R	R	R	Y			DW	DW	DW	DW			
(ACTUATED)																		
	R/W	R	R	R	G	R	R	←G	R			DW	DW	DW	DW			
Φ4+7	Φ4+8	R	R	R	G	R	R	←G	R			DW	DW	DW	DW			
W/B	Φ1+5	R	R	R	Y	R	R	←Y	R			DW	DW	DW	DW			
	Φ1+6	R	R	R	Y	R	R	←Y	R			DW	DW	DW	DW			
SW 184ST.	Φ2+5	R	R	R	Y	R	R	←Y	R			DW	DW	DW	DW			
	Φ2+6	R	R	R	Y	R	R	←Y	R			DW	DW	DW	DW			
(ACTUATED)																		
	R/W	R	R	G	G	R	R	G	G			DW	DW	DW	DW			
Φ4+8	Φ1+5	R	R	Y	Y	R	R	Y	Y			DW	DW	DW	DW			
E/W	Φ1+6	R	R	Y	Y	R	R	Y	Y			DW	DW	DW	DW			
	Φ2+5	R	R	Y	Y	R	R	Y	Y			DW	DW	DW	DW			
SW 184ST	Φ2+6	R	R	Y	Y	R	R	Y	Y			DW	DW	DW	DW			
(ACTUATED)																		
	R/W																	
Flashing Operation		FY	FY	FR	FR	FY	FY	FR	FR									

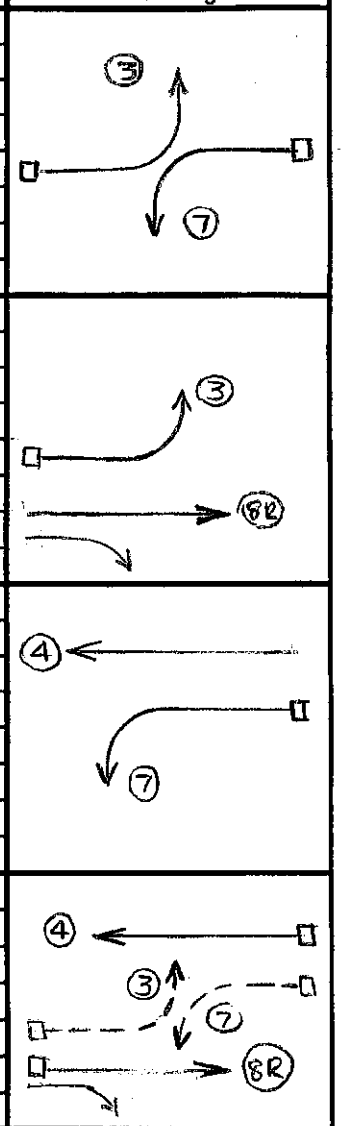

PEDS HAVE A DUAL MODE OPERATION: CONCURRENT OR EXCLUSIVE, SEE TIMING. SHOWN HERE IS THE EXCLUSIVE ONLY.

Miami-Dade County Public Works Department

Sheet 2 of 2

Drawn	Date				
F. BADRAMPOUR	9/20/00	FRANJO RD & SW 184 ST (SW 97 AV)			
Check	**Date**	**Placed in Service**		**Phasing Number**	**Asset Number**
		Date	**By**		
H. HERNANDEZ	10/3/00		C-DTI	5	2938

TOD Schedule Report

for 2938: Franjo Rd&SW 184 St

Print Date: 10/16/2013

Print Time: 8:04 AM

Asset	Intersection	TOD Schedule	Op Mode	Plan #	Cycle	Offset	TOD Setting	Active PhaseBank	Active Maximum
2938	Franjo Rd&SW 184 St	DOW-4		N/A	0	0	N/A	0	Max 0

Splits

PH 1	PH 2	PH 3	PH 4	PH 5	PH 6	PH 7	PH 8
NBL	SBT	EBL	WBT	SBL	NBT	WBL	EBT
0	0	0	0	0	0	0	0

Active Phase Bank: Phase Bank 1

Phase		Walk (Phase Bank 1 - 2 - 3)	Don't Walk (1 - 2 - 3)	Min Initial (1 - 2 - 3)	Veh Ext (1 - 2 - 3)	Max Limit (1 - 2 - 3)	Max 2 (1 - 2 - 3)	Yellow	Red
1	NBL	0 - 0 - 0	0 - 0 - 0	5 - 5 - 5	2 - 2 - 2	7 - 5 - 5	7 - 5 - 5	3	0
2	SBT	0 - 7 - 7	0 - 11 - 11	7 - 7 - 7	1 - 1 - 1	25 - 22 - 31	0 - 23 - 21	4	1
3	EBL	0 - 0 - 0	0 - 0 - 0	5 - 5 - 5	2 - 2 - 2	7 - 5 - 5	7 - 5 - 5	3	0
4	WBT	0 - 7 - 7	0 - 11 - 11	7 - 7 - 7	3.5 - 3.5 - 3.5	25 - 18 - 38	38 - 32 - 32	4	1
5	SBL	0 - 0 - 0	0 - 0 - 0	5 - 5 - 5	2 - 2 - 2	7 - 5 - 5	7 - 5 - 5	3	0
6	NBT	0 - 7 - 7	0 - 11 - 11	7 - 7 - 7	1 - 1 - 1	25 - 22 - 31	0 - 23 - 21	4	1
7	WBL	0 - 0 - 0	0 - 0 - 0	5 - 5 - 5	2 - 2 - 2	7 - 5 - 5	7 - 5 - 5	3	0
8	EBT	0 - 7 - 7	0 - 11 - 11	7 - 7 - 7	3.5 - 3.5 - 3.5	25 - 18 - 38	38 - 32 - 32	4	1

Last In Service Date: unknown

Permitted Phases

	12345678
Default	12345678
External Permit 0	--------
External Permit 1	12345678
External Permit 2	--------

Current TOD Schedule	Plan	Cycle	1 NBL	2 SBT	3 EBL	4 WBT	5 SBL	6 NBT	7 WBL	8 EBT	Ring Offset	Offset

Local TOD Schedule

Time	Plan	DOW
0000	Free	Su M T W Th F S

Current Time of Day Function

Time	Function	Settings *	Day of Week
0000	TOD OUTPUTS	-7-----1	SuM T W ThF S
0530	TOD OUTPUTS	-7----2-	M T W ThF
0700	TOD OUTPUTS	--------	M T W ThF
1600	TOD OUTPUTS	-7---3--	M T W ThF
1830	TOD OUTPUTS	-7--4---	M T W ThF
2230	TOD OUTPUTS	-7-----1	SuM T W ThF S

Local Time of Day Function

Time	Function	Settings *	Day of Week
0000	TOD OUTPUTS	-7-----1	SuM T W ThF S
0530	TOD OUTPUTS	-7----2-	M T W ThF
0600	TOD OUTPUTS	-7----2-	Su S
0700	TOD OUTPUTS	--------	M T W ThF
1600	TOD OUTPUTS	-7---3--	M T W ThF
1830	TOD OUTPUTS	-7--4---	M T W ThF
2230	TOD OUTPUTS	-7-----1	SuM T W ThF S

*** Settings**

Blank - FREE - Phase Bank 1, Max 1
Blank - Plan - Phase Bank 1, Max 2
1 - Phase Bank 2, Max 1
2 - Phase Bank 2, Max 2
3 - Phase Bank 3, Max 1
4 - Phase Bank 3, Max 2
5 - EXTERNAL PERMIT 1
6 - EXTERNAL PERMIT 2
7 - X-PED OMIT
8 - TBA

No Calendar Defined/Enabled

NOTE - THIS PLAN WAS MODIFIED FOR B.SIDE PED. 6/2002 F.B

STATE PROJ. NO.	SHEET NO.
87100-3574	T-29

SIGNAL HEAD DETAIL

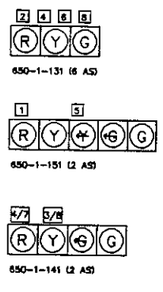

SIGN DETAIL

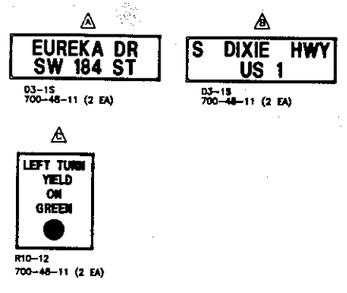

CONTROLLER OPERATIONS:

1. MAJOR STREET: US 1 (S DIXIE HWY), PHASE 3 (MOVEMENTS 2 & 6)
   MINOR STREET: EB EUREKA DRIVE (SW 184 ST), PHASE 4 (MOVEMENTS 3 & 8)
   WB EUREKA DRIVE (SW 184 ST), PHASE 5 (MOVEMENTS 4 & 7)
2. STANDARD SIGNAL OPERATING PLAN NO. 9 WITH THE FOLLOWING:

(A) COORDINATION OF PHASE 3 (MOVEMENTS 2 & 6).

(B) FLASHING OPERATION:
MOVEMENTS 2 & 6 - YELLOW
MOVEMENTS 4 & 8 - RED

REMOVAL ITEMS

690-10	REMOVE TRAFFIC SIGNAL HEAD ASSEMBLY	EA.	12
690-20	REMOVE PEDESTRIAN SIGNAL ASSEMBLY	EA.	-
690-30	REMOVE POLE	EA.	2
690-31	REMOVE SIGNAL PEDESTAL	EA.	-
690-40	REMOVE MAST ARM ASSEMBLY	EA.	-
690-50	REMOVE CONTROLLER ASSEMBLY	EA.	1
690-80	REMOVE SPAN WIRE ASSEMBLY	EA.	1
690-90	REMOVE CABLING AND CONDUIT	PI	1
690-100	REMOVE MISCELLANEOUS SIGNAL EQUIPMENT	PI	-

GENERAL NOTES

1. INTERCEPT EXISTING CONDUIT(S) & RUN TO NEW CONTROLLER

CONTROLLER TIMINGS

	TIMING FUNCTION	1	2	3	4	5	6	7	8
TIMING FUNCTION	MIN. GRN. (INT.)								
	EXT. (PASS)								
	MAX. GRN. I								
	MAX. GRN. II								
	YELLOW CLR.								
	ALL RED CLR.								
	PED. WALK								
	PED. CLR.								
	RECALL								

CONTROLLER TIMINGS TO BE SUPPLIED BY DADE COUNTY.

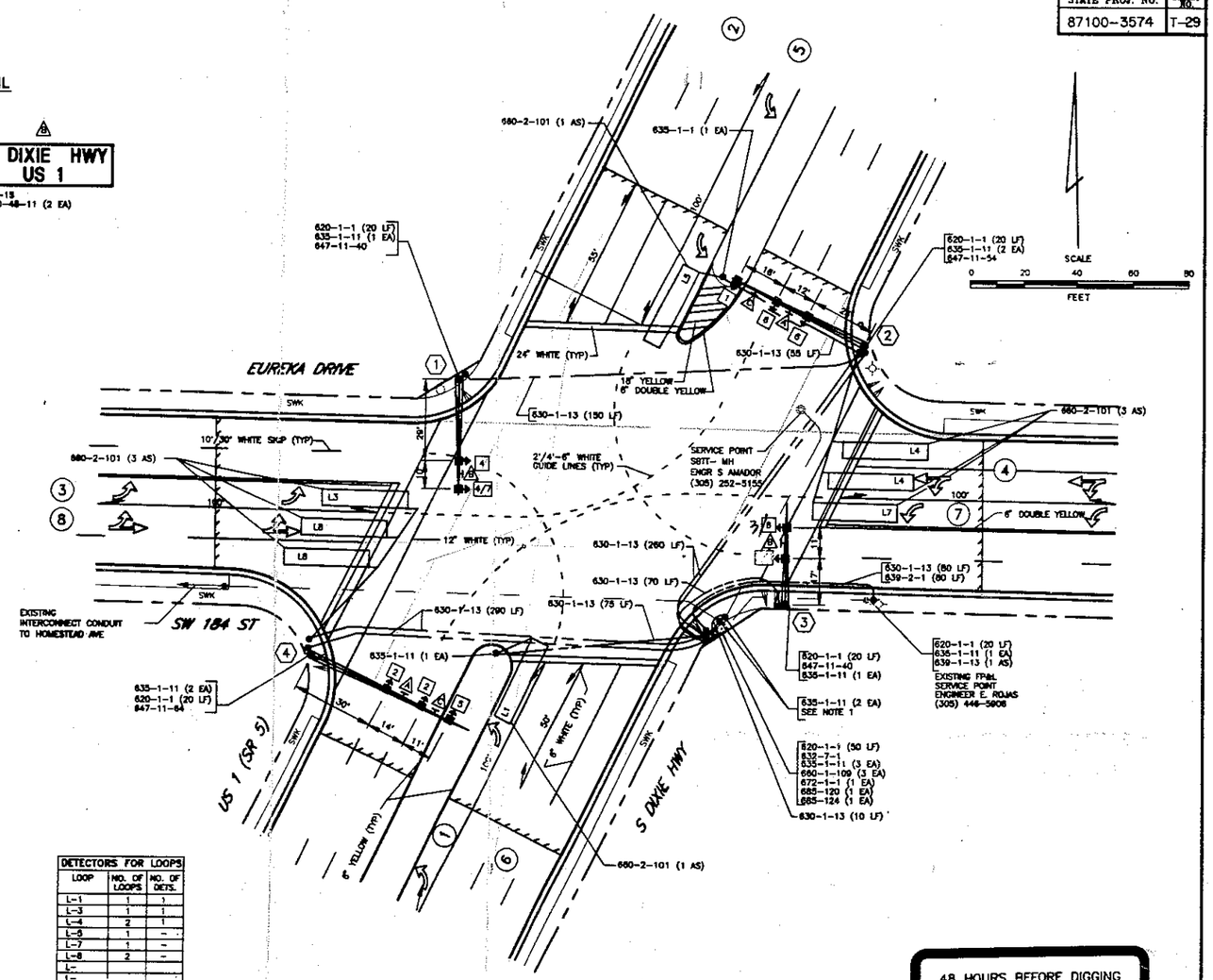

DETECTORS FOR LOOPS		
LOOP	NO. OF LOOPS	NO. OF DETS.
L-1	1	1
L-3	1	1
L-4	2	1
L-5	1	-
L-7	1	-
L-8	2	-
L-		
L-		
L-		

48 HOURS BEFORE DIGGING
CALL UNCLE
1-800-432-4770
UNDERGROUND UTILITIES NOTIFICATION CENTER OF FLORIDA

REVISIONS											
DATE	BY	DESCRIPTION	DATE	BY	DESCRIPTION	DATE	BY	DESCRIPTION	DATE	BY
12/15/92	P.T.	REVISION TO GROUND RODS								

Frederic R. Harris, Inc.
6300 N.E. First Avenue
Fort Lauderdale, FL 33334

	NAME	DATE		NAME	DATE
DESIGNED BY:	P.T.	11/92	DRAWN BY:	L.M.	11/92
CHECKED BY:	P.T.	11/92	CHECKED BY:	P.T.	11/92
SUPERVISED BY: J. REYNOLD, P.E.					

FLORIDA DEPARTMENT OF TRANSPORTATION
APPROVED BY:
DATE:

US 1 & SW 184 ST
INT. ID. 4712

12-20-92 (1)

Sec. 12

SIGNAL OPERATING PLAN

N

Phase	Direction	NEB			SWB			EB			WB			Ped Heads				Drawing
	Head No.	1/6	6		5/2	2		3	8		7	4		P6	P2	P8	P4	
Φ (1+5) NEB/SWB US-1 (Actuated)	Dwell	<G/R	R		<G/R	R		R	R		R	R		DW	DW	W/F	DW	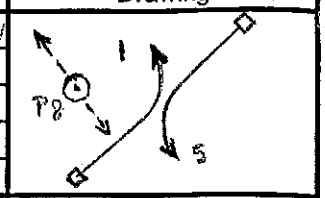
	Clear (1+6)	<G/R	R		<Y/R	R		R	R		R	R		DW	DW	DW	DW	
	Clear (2+5)	<Y/R	R		<G/G	R		R	R		R	R		DW	DW	DW	DW	
	Clear (2+6)	<Y/R	R		<Y/R	R		R	R		R	R		DW	DW	DW	DW	
Φ (1+6) NEB US-1 (Actuated)	Dwell	<G/G	G		R	R		R	R		R	R		W/F	DW	W/F	DW	
	Clear (2+6)	<Y/G	G		R	R		R	R		R	R		DW	DW	DW	DW	
Φ (2+5) SWB US-1 (Actuated)	Dwell	R	R		<G/G	G		R	R		R	R		DW	W/F	DW	DW	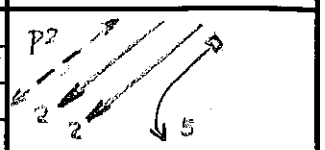
	Clear (2+6)	R	R		<Y/G	G		R	R		R	R		DW	DW	DW	DW	
Φ (2+6) NEB/SWB US-1 (Recall)	Dwell	G	G		G	G		R	R		R	R		W/F	W/F	DW	DW	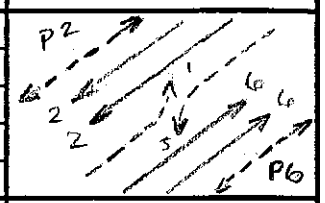
	Clear (3)	Y	Y		Y	Y		R	R		R	R		DW	DW	DW	DW	
	Clear (4)	Y	Y		Y	Y		R	R		R	R		DW	DW	DW	DW	
Φ (3) E/B SW 184 ST (ACTUATED)	Dwell	R	R		R	R		G	G		R	R		DW	DW	W/F	DW	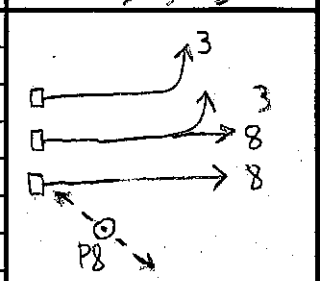
	Clear to (4)	R	R		R	R		Y	Y		R	R		DW	DW	DW	DW	
	Clear to (1+5)	R	R		R	R		Y	Y		R	R		DW	DW	DW	DW	
	Clear to (1+6)	R	R		R	R		Y	Y		R	R		DW	DW	DW	DW	
	Clear to (2+5)	R	R		R	R		Y	Y		R	R		DW	DW	DW	DW	
	Clear to (2+6)	R	R		R	R		Y	Y		R	R		DW	DW	DW	DW	
Φ (4) W/B SW 184 ST (ACTUATED)	Dwell	R	R		R	R		R	R		G	G		DW	DW	DW	W/F	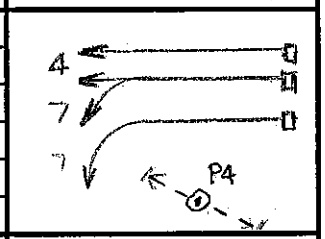
	Clear to (1+5)	R	R		R	R		R	R		Y	Y		DW	DW	DW	DW	
	Clear to (1+6)	R	R		R	R		R	R		Y	Y		DW	DW	DW	DW	
	Clear to (2+5)	R	R		R	R		R	R		Y	Y		DW	DW	DW	DW	
	Clear to (2+6)	R	R		R	R		R	R		Y	Y		DW	DW	DW	DW	
	Dwell																	
	Clear to																	
	Dwell																	
	Clear																	
Flashing Operation		FY	FY		FY	FY		FR	FR		FR	FR						Page 1 of 1

Miami-Dade County Public Works Department

Drawn F. BADRAMPOUR	Date 11/29/01	US-1 & SW 184 ST		REVISION - 1 6/23/06 FB
Checked H. HERNANDEZ	Date 11/30/01	Placed in Service	Phasing No.	Asset Number
		Date 12/10/01 By C-HOR	3	4712

HlafQuadPPMainBlankSideConcPeds

TOD Schedule Report

for 4712: US 1&SW 184 St

Print Date: 8/17/2013

Print Time: 5:05 PM

Asset	Intersection	TOD Schedule	Op Mode	Plan #	Cycle	Offset	TOD Setting	Active PhaseBank	Active Maximum
4712	US 1&SW 184 St	DOW-7		N/A	0	0	N/A	0	Max 0

Splits

PH 1	PH 2	PH 3	PH 4	PH 5	PH 6	PH 7	PH 8
NEL	SBT	EBT	WBT	SWL	NBT	-	-
0	0	0	0	0	0	0	0

Active Phase Bank: Phase Bank 1

Phase		Walk (Phase Bank 1 - 2 - 3)	Don't Walk (1 - 2 - 3)	Min Initial (1 - 2 - 3)	Veh Ext (1 - 2 - 3)	Max Limit (1 - 2 - 3)	Max 2 (1 - 2 - 3)	Yellow	Red
1	NEL	5 - 5 - 5	10 - 10 - 10	5 - 5 - 5	2 - 2 - 2	10 - 7 - 7	20 - 13 - 13	3	0
2	SBT	5 - 5 - 5	18 - 18 - 18	5 - 5 - 5	1 - 1 - 1	60 - 60 - 60	0 - 60 - 60	4.3	0.8
3	EBT	5 - 5 - 5	12 - 12 - 12	7 - 7 - 7	3.5 - 3.5 - 3.5	12 - 10 - 10	38 - 35 - 35	4	1.4
4	WBT	5 - 5 - 5	12 - 12 - 12	7 - 7 - 7	3.5 - 3.5 - 3.5	12 - 10 - 10	30 - 30 - 30	4	1.2
5	SWL	0 - 0 - 0	0 - 0 - 0	5 - 5 - 5	2 - 2 - 2	10 - 7 - 7	20 - 13 - 13	3	0
6	NBT	5 - 5 - 5	18 - 18 - 18	5 - 5 - 5	1 - 1 - 1	60 - 60 - 60	0 - 60 - 60	4.3	0.8
7	-	0 - 0 - 0	0 - 0 - 0	0 - 0 - 0	0 - 0 - 0	0 - 0 - 0	0 - 0 - 0	0	0
8	-	0 - 0 - 0	0 - 0 - 0	0 - 0 - 0	0 - 0 - 0	0 - 0 - 0	0 - 0 - 0	0	0

Last In Service Date: unknown

Permitted Phases

	12345678
Default	123456--
External Permit 0	--------
External Permit 1	--------
External Permit 2	--------

Current TOD Schedule	Plan	Cycle	Green Time 1 NEL	2 SBT	3 EBT	4 WBT	5 SWL	6 NBT	7 -	8 -	Ring Offset	Offset
	1	170	16	82	31	23	16	82	0	0	0	39
	2	170	16	71	38	27	16	71	0	0	0	69
	3	110	10	57	12	13	10	57	0	0	0	7
	4	110	10	57	12	13	10	57	0	0	0	34
	5	140	16	66	21	19	16	66	0	0	0	84
	6	120	10	61	15	16	10	61	0	0	0	95
	7	110	10	57	12	13	10	57	0	0	0	54
	8	130	13	62	18	19	13	62	0	0	0	24
	9	180	16	79	36	31	16	79	0	0	0	55
	10	130	14	58	20	20	14	58	0	0	0	115
	11	140	14	64	22	22	14	64	0	0	0	98
	12	110	10	57	12	13	10	57	0	0	0	28
	13	130	16	59	18	19	16	59	0	0	0	86
	14	140	16	62	22	22	16	62	0	0	0	25
	15	160	16	74	29	23	16	74	0	0	0	71
	16	190	16	96	33	27	16	96	0	0	0	2
	17	150	13	69	25	25	13	69	0	0	0	103
	18	170	16	74	32	30	16	74	0	0	0	80
	19	130	13	62	18	19	13	62	0	0	0	27
	20	170	16	71	35	30	16	71	0	0	0	80
	21	140	16	66	21	19	16	66	0	0	0	93
	22	110	10	45	18	19	10	45	0	0	0	54
	23	160	16	78	25	23	16	78	0	0	0	92
	25	180	16	81	35	30	16	81	0	0	0	80

Local TOD Schedule

Time	Plan	DOW
0000	3	Su M T W Th F S
0130	12	Su M T W Th F S
0500	4	Su M T W Th F S
0530	7	M T W Th F
0600	7	Su S
0600	18	M T W Th F
0630	22	Su S
0630	20	M T W Th F
0745	10	S
0800	2	M T W Th F
0830	10	Su
0930	10	M T W Th F
1000	11	Su S
1100	17	S
1145	14	M T W Th F
1200	17	Su
1430	17	M T W Th F
1505	15	M T W Th F
1600	16	M T W Th F
1630	11	Su
1830	5	Su
1830	11	S
1900	5	M T W Th F
1930	5	S
2100	13	Su M T W Th F S
2200	6	Su M T W Th F S

Current Time of Day Function

Time	Function	Settings *	Day of Week
0000	TOD OUTPUTS	--------	SuM T W ThF S

Local Time of Day Function

Time	Function	Settings *	Day of Week
0000	TOD OUTPUTS	--------	SuM T W ThF S

*** Settings**

Blank - FREE - Phase Bank 1, Max 1
Blank - Plan - Phase Bank 1, Max 2
1 - Phase Bank 2, Max 1
2 - Phase Bank 2, Max 2
3 - Phase Bank 3, Max 1
4 - Phase Bank 3, Max 2
5 - EXTERNAL PERMIT 1
6 - EXTERNAL PERMIT 2
7 - X-PED OMIT
8 - TBA

No Calendar Defined/Enabled

Appendix D

2014 Existing
Synchro Output Sheet

HCM Unsignalized Intersection Capacity Analysis
1: SW 97th Ave. & SW 174th St.

2/11/2015

Movement	EBL	EBT	EBR	WBL	WBT	WBR	NBL	NBT	NBR	SBL	SBT	SBR
Lane Configurations												
Sign Control		Stop			Stop			Stop			Stop	
Volume (vph)	7	122	48	50	89	1	38	13	21	2	1	2
Peak Hour Factor	0.84	0.84	0.84	0.84	0.84	0.84	0.84	0.84	0.84	0.84	0.84	0.84
Hourly flow rate (vph)	8	145	57	60	106	1	45	15	25	2	1	2

Direction, Lane #	EB 1	WB 1	NB 1	SB 1
Volume Total (vph)	211	167	86	6
Volume Left (vph)	8	60	45	2
Volume Right (vph)	57	1	25	2
Hadj (s)	-0.12	0.10	-0.04	-0.13
Departure Headway (s)	4.2	4.4	4.7	4.7
Degree Utilization, x	0.25	0.21	0.11	0.01
Capacity (veh/h)	834	777	707	687
Control Delay (s)	8.5	8.6	8.3	7.8
Approach Delay (s)	8.5	8.6	8.3	7.8
Approach LOS	A	A	A	A

Intersection Summary			
Delay	8.5		
HCM Level of Service	A		
Intersection Capacity Utilization	33.2%	ICU Level of Service	A
Analysis Period (min)	15		

Lane Group	EBL	NBT	SBT	NET
Lane Group Flow (vph)	81	505	16	3693
v/c Ratio	0.85	1.41	0.06	1.07
Control Delay	135.4	239.8	59.4	67.1
Queue Delay	0.0	0.0	0.0	0.0
Total Delay	135.4	239.8	59.4	67.1
Queue Length 50th (ft)	91	~673	15	~1665
Queue Length 95th (ft)	#179	#818	37	#1492
Internal Link Dist (ft)	257	1041	665	1300
Turn Bay Length (ft)				
Base Capacity (vph)	95	358	249	3440
Starvation Cap Reductn	0	0	0	0
Spillback Cap Reductn	0	0	0	0
Storage Cap Reductn	0	0	0	0
Reduced v/c Ratio	0.85	1.41	0.06	1.07

Intersection Summary

~ Volume exceeds capacity, queue is theoretically infinite.
Queue shown is maximum after two cycles.

95th percentile volume exceeds capacity, queue may be longer.
Queue shown is maximum after two cycles.

Movement	EBL	EBR	NBL	NBT	NBR	SBL	SBT	NEL2	NEL	NET	NER
Lane Configurations											
Volume (vph)	1	67	3	21	400	3	10	1	2	3094	6
Ideal Flow (vphpl)	1900	1900	1900	1900	1900	1900	1900	1900	1900	1900	1900
Total Lost time (s)	5.0			5.0			5.0			5.0	
Lane Util. Factor	1.00			1.00			1.00			0.91	
Frt	0.87			0.87			1.00			1.00	
Flt Protected	1.00			1.00			0.99			1.00	
Satd. Flow (prot)	1613			1625			1840			5084	
Flt Permitted	1.00			1.00			0.76			1.00	
Satd. Flow (perm)	1613			1624			1411			5084	
Peak-hour factor, PHF	0.84	0.84	0.84	0.84	0.84	0.84	0.84	0.84	0.84	0.84	0.84
Adj. Flow (vph)	1	80	4	25	476	4	12	1	2	3683	7
RTOR Reduction (vph)	0	0	0	71	0	0	0	0	0	0	0
Lane Group Flow (vph)	81	0	0	434	0	0	16	0	0	3693	0
Turn Type	NA		Perm	NA		Perm	NA	Perm	Perm	NA	
Protected Phases	3			4			8			6	
Permitted Phases			4			8		6	6		
Actuated Green, G (s)	10.0			30.0			30.0			115.0	
Effective Green, g (s)	10.0			30.0			30.0			115.0	
Actuated g/C Ratio	0.06			0.18			0.18			0.68	
Clearance Time (s)	5.0			5.0			5.0			5.0	
Vehicle Extension (s)	3.0			3.0			3.0			3.0	
Lane Grp Cap (vph)	95			287			249			3439	
v/s Ratio Prot	c0.05										
v/s Ratio Perm				c0.27			0.01			0.73	
v/c Ratio	0.85			1.51			0.06			1.07	
Uniform Delay, d1	79.3			70.0			58.3			27.5	
Progression Factor	1.00			1.00			1.00			1.00	
Incremental Delay, d2	48.2			248.0			0.5			39.6	
Delay (s)	127.5			318.0			58.8			67.1	
Level of Service	F			F			E			E	
Approach Delay (s)	127.5			318.0			58.8			67.1	
Approach LOS	F			F			E			E	

Intersection Summary			
HCM Average Control Delay	97.7	HCM Level of Service	F
HCM Volume to Capacity ratio	1.14		
Actuated Cycle Length (s)	170.0	Sum of lost time (s)	15.0
Intersection Capacity Utilization	104.5%	ICU Level of Service	G
Analysis Period (min)	15		
c Critical Lane Group			

Movement	EBL	EBR	NBL	NBT	SBT	SBR
Lane Configurations						
Volume (veh/h)	8	30	32	447	78	0
Sign Control	Stop			Free	Free	
Grade	0%			0%	0%	
Peak Hour Factor	0.90	0.90	0.90	0.90	0.90	0.90
Hourly flow rate (vph)	9	33	36	497	87	0
Pedestrians						
Lane Width (ft)						
Walking Speed (ft/s)						
Percent Blockage						
Right turn flare (veh)						
Median type				None	None	
Median storage veh)						
Upstream signal (ft)					1121	
pX, platoon unblocked						
vC, conflicting volume	654	87	87			
vC1, stage 1 conf vol						
vC2, stage 2 conf vol						
vCu, unblocked vol	654	87	87			
tC, single (s)	6.4	6.2	4.1			
tC, 2 stage (s)						
tF (s)	3.5	3.3	2.2			
p0 queue free %	98	97	98			
cM capacity (veh/h)	421	972	1509			

Direction, Lane #	EB 1	NB 1	SB 1
Volume Total	42	532	87
Volume Left	9	36	0
Volume Right	33	0	0
cSH	762	1509	1700
Volume to Capacity	0.06	0.02	0.05
Queue Length 95th (ft)	4	2	0
Control Delay (s)	10.0	0.7	0.0
Lane LOS	B	A	
Approach Delay (s)	10.0	0.7	0.0
Approach LOS	B		

Intersection Summary			
Average Delay	1.2		
Intersection Capacity Utilization	42.0%	ICU Level of Service	A
Analysis Period (min)	15		

Movement	WBL	WBR	NBT	NBR	SBL	SBT
Lane Configurations						
Volume (veh/h)	37	45	469	26	11	90
Sign Control	Stop		Free			Free
Grade	0%		0%			0%
Peak Hour Factor	0.89	0.89	0.89	0.89	0.89	0.89
Hourly flow rate (vph)	42	51	527	29	12	101
Pedestrians						
Lane Width (ft)						
Walking Speed (ft/s)						
Percent Blockage						
Right turn flare (veh)						
Median type			None			None
Median storage veh)						
Upstream signal (ft)						
pX, platoon unblocked						
vC, conflicting volume	667	542			556	
vC1, stage 1 conf vol						
vC2, stage 2 conf vol						
vCu, unblocked vol	667	542			556	
tC, single (s)	6.4	6.2			4.1	
tC, 2 stage (s)						
tF (s)	3.5	3.3			2.2	
p0 queue free %	90	91			99	
cM capacity (veh/h)	419	541			1014	

Direction, Lane #	WB 1	NB 1	SB 1
Volume Total	92	556	113
Volume Left	42	0	12
Volume Right	51	29	0
cSH	478	1700	1014
Volume to Capacity	0.19	0.33	0.01
Queue Length 95th (ft)	18	0	1
Control Delay (s)	14.3	0.0	1.0
Lane LOS	B		A
Approach Delay (s)	14.3	0.0	1.0
Approach LOS	B		

Intersection Summary			
Average Delay	1.9		
Intersection Capacity Utilization	37.7%	ICU Level of Service	A
Analysis Period (min)	15		

Movement	EBL	EBR	NBL	NBT	SBT	SBR
Lane Configurations						
Volume (veh/h)	5	21	15	526	123	0
Sign Control	Stop			Free	Free	
Grade	0%			0%	0%	
Peak Hour Factor	0.95	0.95	0.95	0.95	0.95	0.95
Hourly flow rate (vph)	5	22	16	554	129	0
Pedestrians						
Lane Width (ft)						
Walking Speed (ft/s)						
Percent Blockage						
Right turn flare (veh)						
Median type				None	None	
Median storage veh)						
Upstream signal (ft)				1230		
pX, platoon unblocked	0.82					
vC, conflicting volume	715	129	129			
vC1, stage 1 conf vol						
vC2, stage 2 conf vol						
vCu, unblocked vol	543	129	129			
tC, single (s)	6.4	6.2	4.1			
tC, 2 stage (s)						
tF (s)	3.5	3.3	2.2			
p0 queue free %	99	98	99			
cM capacity (veh/h)	406	920	1456			

Direction, Lane #	EB 1	NB 1	SB 1
Volume Total	27	569	129
Volume Left	5	16	0
Volume Right	22	0	0
cSH	740	1456	1700
Volume to Capacity	0.04	0.01	0.08
Queue Length 95th (ft)	3	1	0
Control Delay (s)	10.0	0.3	0.0
Lane LOS	B	A	
Approach Delay (s)	10.0	0.3	0.0
Approach LOS	B		

Intersection Summary			
Average Delay	0.6		
Intersection Capacity Utilization	48.3%	ICU Level of Service	A
Analysis Period (min)	15		

Movement	EBL	EBT	EBR	WBL	WBT	WBR	NBL	NBT	NBR	SBL	SBT	SBR
Lane Configurations												
Volume (veh/h)	11	3	7	5	8	30	10	511	0	8	140	6
Sign Control		Stop			Stop			Free			Free	
Grade		0%			0%			0%			0%	
Peak Hour Factor	0.93	0.93	0.93	0.93	0.93	0.93	0.93	0.93	0.93	0.93	0.93	0.93
Hourly flow rate (vph)	12	3	8	5	9	32	11	549	0	9	151	6
Pedestrians												
Lane Width (ft)												
Walking Speed (ft/s)												
Percent Blockage												
Right turn flare (veh)												
Median type								None			None	
Median storage veh)												
Upstream signal (ft)								904				
pX, platoon unblocked	0.81	0.81		0.81	0.81	0.81				0.81		
vC, conflicting volume	778	742	154	751	745	549	157			549		
vC1, stage 1 conf vol												
vC2, stage 2 conf vol												
vCu, unblocked vol	607	561	154	573	565	323	157			323		
tC, single (s)	7.1	6.5	6.2	7.1	6.5	6.2	4.1			4.1		
tC, 2 stage (s)												
tF (s)	3.5	4.0	3.3	3.5	4.0	3.3	2.2			2.2		
p0 queue free %	96	99	99	98	98	94	99			99		
cM capacity (veh/h)	302	347	892	338	345	580	1423			999		

Direction, Lane #	EB 1	WB 1	NB 1	SB 1
Volume Total	23	46	560	166
Volume Left	12	5	11	9
Volume Right	8	32	0	6
cSH	397	479	1423	999
Volume to Capacity	0.06	0.10	0.01	0.01
Queue Length 95th (ft)	5	8	1	1
Control Delay (s)	14.6	13.3	0.2	0.5
Lane LOS	B	B	A	A
Approach Delay (s)	14.6	13.3	0.2	0.5
Approach LOS	B	B		

Intersection Summary			
Average Delay	1.5		
Intersection Capacity Utilization	40.4%	ICU Level of Service	A
Analysis Period (min)	15		

Movement	EBL	EBT	EBR	WBL	WBT	WBR	NBL	NBT	NBR	SBL	SBT	SBR
Lane Configurations												
Volume (veh/h)	5	1	2	1	4	3	2	519	2	1	142	5
Sign Control		Stop			Stop			Free			Free	
Grade		0%			0%			0%			0%	
Peak Hour Factor	0.91	0.91	0.91	0.91	0.91	0.91	0.91	0.91	0.91	0.91	0.91	0.91
Hourly flow rate (vph)	5	1	2	1	4	3	2	570	2	1	156	5
Pedestrians												
Lane Width (ft)												
Walking Speed (ft/s)												
Percent Blockage												
Right turn flare (veh)												
Median type								None			None	
Median storage veh)												
Upstream signal (ft)								601				
pX, platoon unblocked	0.81	0.81		0.81	0.81	0.81				0.81		
vC, conflicting volume	742	738	159	740	740	571	162			573		
vC1, stage 1 conf vol												
vC2, stage 2 conf vol												
vCu, unblocked vol	561	555	159	557	557	349	162			350		
tC, single (s)	7.1	6.5	6.2	7.1	6.5	6.2	4.1			4.1		
tC, 2 stage (s)												
tF (s)	3.5	4.0	3.3	3.5	4.0	3.3	2.2			2.2		
p0 queue free %	98	100	100	100	99	99	100			100		
cM capacity (veh/h)	348	354	886	353	353	560	1417			975		

Direction, Lane #	EB 1	WB 1	NB 1	SB 1
Volume Total	9	9	575	163
Volume Left	5	1	2	1
Volume Right	2	3	2	5
cSH	411	410	1417	975
Volume to Capacity	0.02	0.02	0.00	0.00
Queue Length 95th (ft)	2	2	0	0
Control Delay (s)	14.0	14.0	0.0	0.1
Lane LOS	B	B	A	A
Approach Delay (s)	14.0	14.0	0.0	0.1
Approach LOS	B	B		

Intersection Summary			
Average Delay	0.4		
Intersection Capacity Utilization	38.8%	ICU Level of Service	A
Analysis Period (min)	15		

Movement	EBL	EBT	EBR	WBL	WBT	WBR	NBL	NBT	NBR	SBL	SBT	SBR
Lane Configurations												
Volume (veh/h)	2	3	29	0	1	3	15	504	3	3	140	6
Sign Control		Stop			Stop			Free			Free	
Grade		0%			0%			0%			0%	
Peak Hour Factor	0.94	0.94	0.94	0.94	0.94	0.94	0.94	0.94	0.94	0.94	0.94	0.94
Hourly flow rate (vph)	2	3	31	0	1	3	16	536	3	3	149	6
Pedestrians												
Lane Width (ft)												
Walking Speed (ft/s)												
Percent Blockage												
Right turn flare (veh)												
Median type								None			None	
Median storage veh)												
Upstream signal (ft)								300				
pX, platoon unblocked	0.82	0.82		0.82	0.82	0.82				0.82		
vC, conflicting volume	732	730	152	761	731	538	155			539		
vC1, stage 1 conf vol												
vC2, stage 2 conf vol												
vCu, unblocked vol	565	563	152	600	564	329	155			331		
tC, single (s)	7.1	6.5	6.2	7.1	6.5	6.2	4.1			4.1		
tC, 2 stage (s)												
tF (s)	3.5	4.0	3.3	3.5	4.0	3.3	2.2			2.2		
p0 queue free %	99	99	97	100	100	99	99			100		
cM capacity (veh/h)	351	353	894	322	352	585	1425			1009		

Direction, Lane #	EB 1	WB 1	NB 1	SB 1
Volume Total	36	4	555	159
Volume Left	2	0	16	3
Volume Right	31	3	3	6
cSH	729	502	1425	1009
Volume to Capacity	0.05	0.01	0.01	0.00
Queue Length 95th (ft)	4	1	1	0
Control Delay (s)	10.2	12.2	0.3	0.2
Lane LOS	B	B	A	A
Approach Delay (s)	10.2	12.2	0.3	0.2
Approach LOS	B	B		

Intersection Summary			
Average Delay	0.8		
Intersection Capacity Utilization	44.8%	ICU Level of Service	A
Analysis Period (min)	15		

Lane Group	EBL	EBT	EBR	WBL	WBT	NBL	NBT	SBL	SBT
Lane Group Flow (vph)	45	400	105	68	545	207	540	28	139
v/c Ratio	0.09	0.71	0.22	0.14	0.46	0.39	0.59	0.08	0.18
Control Delay	15.1	38.1	8.6	15.3	26.8	21.2	31.9	18.2	30.9
Queue Delay	0.0	0.0	0.0	0.0	0.0	0.0	0.0	0.0	0.0
Total Delay	15.1	38.1	8.6	15.3	26.8	21.2	31.9	18.2	30.9
Queue Length 50th (ft)	15	197	0	23	148	87	142	11	38
Queue Length 95th (ft)	37	317	45	51	217	142	195	27	64
Internal Link Dist (ft)		1915			422		229		156
Turn Bay Length (ft)	130			95		155		130	
Base Capacity (vph)	496	624	521	482	1314	551	1369	389	1247
Starvation Cap Reductn	0	0	0	0	0	0	0	0	0
Spillback Cap Reductn	0	0	0	0	0	0	0	0	0
Storage Cap Reductn	0	0	0	0	0	0	0	0	0
Reduced v/c Ratio	0.09	0.64	0.20	0.14	0.41	0.38	0.39	0.07	0.11

Intersection Summary

Movement	EBL	EBT	EBR	WBL	WBT	WBR	NBL	NBT	NBR	SBL	SBT	SBR
Lane Configurations												
Volume (vph)	43	380	100	65	466	51	197	440	73	27	130	2
Ideal Flow (vphpl)	1900	1900	1900	1900	1900	1900	1900	1900	1900	1900	1900	1900
Total Lost time (s)	3.0	3.0	5.0	3.0	3.0		3.0	3.0		3.0	3.0	
Lane Util. Factor	1.00	1.00	1.00	1.00	0.95		1.00	0.95		1.00	0.95	
Frt	1.00	1.00	0.85	1.00	0.99		1.00	0.98		1.00	1.00	
Flt Protected	0.95	1.00	1.00	0.95	1.00		0.95	1.00		0.95	1.00	
Satd. Flow (prot)	1770	1863	1583	1770	3487		1770	3464		1770	3532	
Flt Permitted	0.41	1.00	1.00	0.44	1.00		0.66	1.00		0.45	1.00	
Satd. Flow (perm)	762	1863	1583	822	3487		1237	3464		840	3532	
Peak-hour factor, PHF	0.95	0.95	0.95	0.95	0.95	0.95	0.95	0.95	0.95	0.95	0.95	0.95
Adj. Flow (vph)	45	400	105	68	491	54	207	463	77	28	137	2
RTOR Reduction (vph)	0	0	80	0	7	0	0	13	0	0	1	0
Lane Group Flow (vph)	45	400	25	68	538	0	207	527	0	28	138	0
Turn Type	custom	NA	custom	custom	NA		custom	NA		custom	NA	
Protected Phases	1 2	2 4		1 3	3 4		5 6	6 8		5 7	7 8	
Permitted Phases	4		4	4			8			8		
Actuated Green, G (s)	36.0	26.1	23.2	34.5	30.6		30.9	20.5		24.3	19.9	
Effective Green, g (s)	36.0	26.1	23.2	34.5	30.6		30.9	20.5		24.3	19.9	
Actuated g/C Ratio	0.37	0.27	0.24	0.36	0.32		0.32	0.21		0.25	0.21	
Clearance Time (s)			5.0									
Vehicle Extension (s)			3.0									
Lane Grp Cap (vph)	419	505	381	406	1108		491	737		312	730	
v/s Ratio Prot	0.01	c0.21		c0.02	c0.15		c0.07	c0.15		0.01	c0.04	
v/s Ratio Perm	0.03		0.02	0.04			0.06			0.01		
v/c Ratio	0.11	0.79	0.07	0.17	0.49		0.42	0.72		0.09	0.19	
Uniform Delay, d1	19.4	32.6	28.2	20.7	26.5		25.1	35.2		27.3	31.5	
Progression Factor	1.00	1.00	1.00	1.00	1.00		1.00	1.00		1.00	1.00	
Incremental Delay, d2	0.1	8.3	0.1	0.2	0.3		0.6	3.3		0.1	0.1	
Delay (s)	19.5	40.9	28.3	20.9	26.8		25.7	38.5		27.5	31.7	
Level of Service	B	D	C	C	C		C	D		C	C	
Approach Delay (s)		36.7			26.2			35.0			31.0	
Approach LOS		D			C			C			C	

Intersection Summary			
HCM Average Control Delay	32.5	HCM Level of Service	C
HCM Volume to Capacity ratio	0.59		
Actuated Cycle Length (s)	96.3	Sum of lost time (s)	24.0
Intersection Capacity Utilization	56.2%	ICU Level of Service	B
Analysis Period (min)	15		
c Critical Lane Group			

Movement	EBL	EBT	WBT	WBR	SBL	SBR
Lane Configurations						
Volume (veh/h)	5	494	619	27	5	4
Sign Control		Free	Free		Stop	
Grade		0%	0%		0%	
Peak Hour Factor	0.88	0.88	0.88	0.88	0.88	0.88
Hourly flow rate (vph)	6	561	703	31	6	5
Pedestrians						
Lane Width (ft)						
Walking Speed (ft/s)						
Percent Blockage						
Right turn flare (veh)						
Median type		None	None			
Median storage veh)						
Upstream signal (ft)		502				
pX, platoon unblocked					0.80	
vC, conflicting volume	734				1291	719
vC1, stage 1 conf vol						
vC2, stage 2 conf vol						
vCu, unblocked vol	734				1238	719
tC, single (s)	4.1				6.4	6.2
tC, 2 stage (s)						
tF (s)	2.2				3.5	3.3
p0 queue free %	99				96	99
cM capacity (veh/h)	871				154	429

Direction, Lane #	EB 1	EB 2	WB 1	SB 1
Volume Total	6	561	734	10
Volume Left	6	0	0	6
Volume Right	0	0	31	5
cSH	871	1700	1700	215
Volume to Capacity	0.01	0.33	0.43	0.05
Queue Length 95th (ft)	0	0	0	4
Control Delay (s)	9.2	0.0	0.0	22.6
Lane LOS	A			C
Approach Delay (s)	0.1		0.0	22.6
Approach LOS				C

Intersection Summary			
Average Delay	0.2		
Intersection Capacity Utilization	44.2%	ICU Level of Service	A
Analysis Period (min)	15		

Lane Group	EBL	EBT	WBL	WBT	NBL	NBT	SBL	SBT
Lane Group Flow (vph)	418	520	164	563	61	2032	120	1534
v/c Ratio	1.12	0.70	0.57	0.94	0.38	0.93	0.69	0.66
Control Delay	139.1	66.4	71.5	90.2	25.9	54.1	53.6	36.2
Queue Delay	0.0	0.0	0.0	0.0	0.0	0.0	0.0	0.0
Total Delay	139.1	66.4	71.5	90.2	25.9	54.1	53.6	36.2
Queue Length 50th (ft)	~521	278	181	334	32	767	75	474
Queue Length 95th (ft)	#689	328	259	#412	54	775	136	489
Internal Link Dist (ft)		364		1915		469		768
Turn Bay Length (ft)			286		160		130	
Base Capacity (vph)	374	748	292	613	243	2177	215	2330
Starvation Cap Reductn	0	0	0	0	0	0	0	0
Spillback Cap Reductn	0	0	0	0	0	0	0	0
Storage Cap Reductn	0	0	0	0	0	0	0	0
Reduced v/c Ratio	1.12	0.70	0.56	0.92	0.25	0.93	0.56	0.66

Intersection Summary

~ Volume exceeds capacity, queue is theoretically infinite.
Queue shown is maximum after two cycles.

95th percentile volume exceeds capacity, queue may be longer.
Queue shown is maximum after two cycles.

Movement	EBL	EBT	EBR	WBL	WBT	WBR	NBL	NBT	NBR	SBL	SBT	SBR
Lane Configurations												
Volume (vph)	351	433	4	153	452	6	51	1668	39	101	1168	121
Ideal Flow (vphpl)	1900	1900	1900	1900	1900	1900	1900	1900	1900	1900	1900	1900
Total Lost time (s)	5.0	5.0		5.0	5.0		3.0	5.0		3.0	5.0	
Lane Util. Factor	1.00	0.95		0.91	0.91		1.00	0.91		1.00	0.91	
Frt	1.00	1.00		1.00	1.00		1.00	1.00		1.00	0.99	
Flt Protected	0.95	1.00		0.95	1.00		0.95	1.00		0.95	1.00	
Satd. Flow (prot)	1770	3534		1610	3378		1770	5068		1770	5014	
Flt Permitted	0.95	1.00		0.95	1.00		0.09	1.00		0.05	1.00	
Satd. Flow (perm)	1770	3534		1610	3378		167	5068		100	5014	
Peak-hour factor, PHF	0.84	0.84	0.84	0.84	0.84	0.84	0.84	0.84	0.84	0.84	0.84	0.84
Adj. Flow (vph)	418	515	5	182	538	7	61	1986	46	120	1390	144
RTOR Reduction (vph)	0	0	0	0	1	0	0	1	0	0	7	0
Lane Group Flow (vph)	418	520	0	164	562	0	61	2031	0	120	1527	0
Turn Type	Split	NA		Split	NA		pm+pt	NA		pm+pt	NA	
Protected Phases	4	4		8	8		5	2		1	6	
Permitted Phases							2			6		
Actuated Green, G (s)	35.0	35.0		29.5	29.5		78.7	71.7		86.7	76.7	
Effective Green, g (s)	35.0	35.0		29.5	29.5		78.7	71.7		86.7	76.7	
Actuated g/C Ratio	0.21	0.21		0.18	0.18		0.47	0.43		0.52	0.46	
Clearance Time (s)	5.0	5.0		5.0	5.0		3.0	5.0		3.0	5.0	
Vehicle Extension (s)	3.0	3.0		3.0	3.0		3.0	3.0		3.0	3.0	
Lane Grp Cap (vph)	373	744		286	600		147	2186		173	2314	
v/s Ratio Prot	c0.24	0.15		0.10	c0.17		0.02	c0.40		c0.05	0.30	
v/s Ratio Perm							0.18			0.31		
v/c Ratio	1.12	0.70		0.57	0.94		0.41	0.93		0.69	0.66	
Uniform Delay, d1	65.6	60.7		62.6	67.4		27.4	44.8		41.8	34.7	
Progression Factor	1.00	1.00		1.00	1.00		1.00	1.00		1.00	1.00	
Incremental Delay, d2	83.5	2.9		2.8	22.2		1.9	8.5		11.4	0.7	
Delay (s)	149.1	63.6		65.4	89.6		29.3	53.3		53.2	35.3	
Level of Service	F	E		E	F		C	D		D	D	
Approach Delay (s)		101.7			84.2			52.6			36.6	
Approach LOS		F			F			D			D	

Intersection Summary			
HCM Average Control Delay	60.5	HCM Level of Service	E
HCM Volume to Capacity ratio	0.96		
Actuated Cycle Length (s)	166.2	Sum of lost time (s)	18.0
Intersection Capacity Utilization	86.5%	ICU Level of Service	E
Analysis Period (min)	15		
c Critical Lane Group			

Movement	EBL	EBT	EBR	WBL	WBT	WBR	NBL	NBT	NBR	SBL	SBT	SBR
Lane Configurations												
Volume (vph)	351	433	4	153	452	6	51	1668	39	101	1168	121
Movement Number	7	4	14	3	8	18	5	2	12	1	6	16
Initial Queue, veh	0	0	0	0	0	0	0	0	0	0	0	0
Ped-Bike Adj. Factor (A_pbT)	1.00		1.00	1.00		1.00	1.00		1.00	1.00		1.00
Parking, Bus Adj. Factors	1.00	1.00	1.00	1.00	1.00	1.00	1.00	1.00	1.00	1.00	1.00	1.00
Adj. Sat. Flow Rate, veh/h/ln	1863	1863	1863	1863	1863	1863	1863	1863	1863	1863	1863	1863
Lanes	1	2	0	1	2	0	1	3	0	1	3	0
Lane Assignment												
Capacity, veh/h	394	819	8	292	604	8	181	2305	54	152	2197	228
Proportion Arriving On Green	0.22	0.22	0.22	0.16	0.16	0.16	0.03	0.45	0.45	0.05	0.47	0.47
Movement Delay, s/veh	123.3	58.4	58.4	64.0	85.6	85.8	27.2	45.4	50.3	44.5	32.4	33.1
Movement LOS	F	E	E	E	F	F	C	D	D	D	C	C
Approach Volume, veh/h		938			727			2093			1655	
Approach Delay, s/veh		87.3			80.3			46.6			33.5	
Approach LOS		F			F			D			C	

Timer:	1	2	3	4	5	6	7	8
Assigned Phase	1	2	8	4	5	6		
Case No	1.1	4.0	10.0	10.0	1.1	4.0		
Phase Duration (G+Y+Rc), s	10.54	76.00	30.94	40.00	7.65	78.89		
Change Period (Y+Rc), s	3.00	5.00	5.00	5.00	3.00	5.00		
Max. Allowable Headway (MAH), s	4.00	3.92	3.93	3.95	4.00	3.92		
Maximum Green Setting (Gmax), s	16.00	71.00	30.00	35.00	16.00	71.00		
Max. Queue Clearance Time (g_c+I1), s	7.39	57.03	24.62	37.00	4.90	37.31		
Green Extension Time (g_e), s	0.19	11.76	1.32	0.00	0.08	23.52		
Probability of Phase Call (p_c)	0.995	1.000	1.000	1.000	0.930	1.000		
Probability of Max Out (p_x)	0.014	0.856	0.642	1.000	0.000	0.631		

Left-Turn Movement Data					
Assigned Movement	1		3	7	5
Mvmt. Sat Flow, veh/h	1774.04		1774.04	1774.04	1774.04

Through Movement Data					
Assigned Movement		2	8	4	6
Mvmt. Sat Flow, veh/h		5112.47	3668.23	3685.45	4682.32

Right-Turn Movement Data					
Assigned Movement		12	18	14	16
Mvmt. Sat Flow, veh/h		119.40	48.67	34.03	485.03

Left Lane Group Data								
Assigned Movement	1	0	3	7	5	0	0	0
Lane Assignment	L (Pr/Pm)		L	LL (Pr/Pm)				
Lanes in Group	1	0	1	1	1	0	0	0
Group Volume (v), veh/h	120.2	0.0	182.1	417.9	60.7	0.0	0.0	0.0
Group Sat. Flow (s), veh/h/ln	1774.0	0.0	1774.0	1774.0	1774.0	0.0	0.0	0.0
Queue Serve Time (g_s), s	5.4	0.0	15.1	35.0	2.9	0.0	0.0	0.0
Cycle Queue Clear Time (g_c), s	5.4	0.0	15.1	35.0	2.9	0.0	0.0	0.0

Perm LT Sat Flow Rate (s_l), veh/h/ln	207.8	0.0	1774.0	1774.0	337.1	0.0	0.0	0.0
Shared LT Sat Flow (s_sh), veh/h/ln	0.0	0.0	0.0	0.0	0.0	0.0	0.0	0.0
Perm LT Eff. Green (g_p), s	75.8	0.0	0.0	0.0	71.0	0.0	0.0	0.0
Perm LT Serve Time (g_u), s	16.0	0.0	0.0	0.0	38.6	0.0	0.0	0.0
Perm LT Que Serve Time (g_ps), s	16.0	0.0	0.0	0.0	7.1	0.0	0.0	0.0
Time to First Blk (g_f), s	0.0	0.0	0.0	0.0	0.0	0.0	0.0	0.0
Serve Time pre Blk (g_fs), s	0.0	0.0	0.0	0.0	0.0	0.0	0.0	0.0
Proportion LT Inside Lane (P_L)	1.000	0.000	1.000	1.000	1.000	0.000	0.000	0.000
Lane Group Capacity (c), veh/h	151.7	0.0	292.3	394.3	180.7	0.0	0.0	0.0
Volume-to-Capacity Ratio (X)	0.792	0.000	0.623	1.060	0.336	0.000	0.000	0.000
Available Capacity (c_a), veh/h	247.0	0.0	337.9	394.3	308.5	0.0	0.0	0.0
Upstream Filter Factor (I)	1.000	0.000	1.000	1.000	1.000	0.000	0.000	0.000
Uniform Delay (d1), s/veh	35.6	0.0	61.2	61.2	26.1	0.0	0.0	0.0
Incremental Delay (d2), s/veh	8.9	0.0	2.8	62.0	1.1	0.0	0.0	0.0
Initial Queue Delay (d3), s/veh	0.0	0.0	0.0	0.0	0.0	0.0	0.0	0.0
Control Delay (d), s/veh	44.5	0.0	64.0	123.3	27.2	0.0	0.0	0.0
First-Term Queue (Q1), veh/ln	2.5	0.0	6.8	15.8	1.2	0.0	0.0	0.0
Second-Term Queue (Q2), veh/ln	0.4	0.0	0.2	6.8	0.1	0.0	0.0	0.0
Third-Term Queue (Q3), veh/ln	0.0	0.0	0.0	0.0	0.0	0.0	0.0	0.0
Percentile bk-of-que factor (f_B%)	1.000	0.000	1.000	1.000	1.000	0.000	0.000	0.000
Percentile Back of Queue (Q%), veh/ln	2.9	0.0	7.1	22.6	1.3	0.0	0.0	0.0
Percentile Storage Ratio (RQ%)	0.57	0.00	0.63	1.66	0.21	0.00	0.00	0.00
Initial Queue (Qb), veh	0.0	0.0	0.0	0.0	0.0	0.0	0.0	0.0
Final (Residual) Queue (Qe), veh	0.0	0.0	0.0	5.9	0.0	0.0	0.0	0.0
Saturated Delay (ds), s/veh	0.0	0.0	0.0	0.0	0.0	0.0	0.0	0.0
Saturated Queue (Qs), veh	0.0	0.0	0.0	0.0	0.0	0.0	0.0	0.0
Saturated Capacity (cs), veh/h	0.0	0.0	0.0	0.0	0.0	0.0	0.0	0.0
Initial Queue Clear Time (tc), h	0.0	0.0	0.0	0.3	0.0	0.0	0.0	0.0
Middle Lane Group Data								
Assigned Movement	0	2	8	4	0	6	0	0
Lane Assignment		T	T	T		T		
Lanes in Group	0	2	1	1	0	2	0	0
Group Volume (v), veh/h	0.0	1316.0	273.1	260.4	0.0	1006.7	0.0	0.0
Group Sat. Flow (s), veh/h/ln	0.0	1695.1	1862.7	1862.7	0.0	1695.1	0.0	0.0
Queue Serve Time (g_s), s	0.0	54.9	22.6	19.9	0.0	35.3	0.0	0.0
Cycle Queue Clear Time (g_c), s	0.0	54.9	22.6	19.9	0.0	35.3	0.0	0.0
Lane Group Capacity (c), veh/h	0.0	1528.4	306.9	414.0	0.0	1590.7	0.0	0.0
Volume-to-Capacity Ratio (X)	0.000	0.861	0.890	0.629	0.000	0.633	0.000	0.000
Available Capacity (c_a), veh/h	0.0	1528.4	354.8	414.0	0.0	1590.7	0.0	0.0
Upstream Filter Factor (I)	0.000	1.000	1.000	1.000	0.000	1.000	0.000	0.000
Uniform Delay (d1), s/veh	0.0	38.8	64.4	55.4	0.0	31.6	0.0	0.0
Incremental Delay (d2), s/veh	0.0	6.6	21.2	3.0	0.0	0.8	0.0	0.0
Initial Queue Delay (d3), s/veh	0.0	0.0	0.0	0.0	0.0	0.0	0.0	0.0
Control Delay (d), s/veh	0.0	45.4	85.6	58.4	0.0	32.4	0.0	0.0
First-Term Queue (Q1), veh/ln	0.0	22.7	10.8	9.4	0.0	14.6	0.0	0.0
Second-Term Queue (Q2), veh/ln	0.0	1.4	1.8	0.3	0.0	0.2	0.0	0.0
Third-Term Queue (Q3), veh/ln	0.0	0.0	0.0	0.0	0.0	0.0	0.0	0.0
Percentile bk-of-que factor (f_B%)	0.000	1.000	1.000	1.000	0.000	1.000	0.000	0.000
Percentile Back of Queue (Q%), veh/ln	0.0	24.1	12.6	9.8	0.0	14.7	0.0	0.0
Percentile Storage Ratio (RQ%)	0.00	1.34	0.17	0.72	0.00	0.51	0.00	0.00

Initial Queue (Qb), veh	0.0	0.0	0.0	0.0	0.0	0.0	0.0	0.0
Final (Residual) Queue (Qe), veh	0.0	0.0	0.0	0.0	0.0	0.0	0.0	0.0
Saturated Delay (ds), s/veh	0.0	0.0	0.0	0.0	0.0	0.0	0.0	0.0
Saturated Queue (Qs), veh	0.0	0.0	0.0	0.0	0.0	0.0	0.0	0.0
Saturated Capacity (cs), veh/h	0.0	0.0	0.0	0.0	0.0	0.0	0.0	0.0
Initial Queue Clear Time (tc), h	0.0	0.0	0.0	0.0	0.0	0.0	0.0	0.0
Right Lane Group Data								
Assigned Movement	0	12	18	14	0	16	0	0
Lane Assignment		T+R	T+R	T+R		T+R		
Lanes in Group	0	1	1	1	0	1	0	0
Group Volume (v), veh/h	0.0	716.1	272.1	259.8	0.0	527.8	0.0	0.0
Group Sat. Flow (s), veh/h/ln	0.0	1841.7	1854.2	1856.7	0.0	1777.2	0.0	0.0
Queue Serve Time (g_s), s	0.0	55.0	22.6	19.9	0.0	35.3	0.0	0.0
Cycle Queue Clear Time (g_c), s	0.0	55.0	22.6	19.9	0.0	35.3	0.0	0.0
Prot RT Sat Flow Rate (s_R), veh/h/ln	0.0	0.0	0.0	0.0	0.0	0.0	0.0	0.0
Prot RT Eff. Green (g_R), s	0.0	0.0	0.0	0.0	0.0	0.0	0.0	0.0
Proportion RT Outside Lane (P_R)	0.000	0.065	0.026	0.018	0.000	0.273	0.000	0.000
Lane Group Capacity (c), veh/h	0.0	830.3	305.5	412.6	0.0	833.8	0.0	0.0
Volume-to-Capacity Ratio (X)	0.000	0.863	0.891	0.630	0.000	0.633	0.000	0.000
Available Capacity (c_a), veh/h	0.0	830.3	353.2	412.6	0.0	833.8	0.0	0.0
Upstream Filter Factor (I)	0.000	1.000	1.000	1.000	0.000	1.000	0.000	0.000
Uniform Delay (d1), s/veh	0.0	38.9	64.4	55.4	0.0	31.6	0.0	0.0
Incremental Delay (d2), s/veh	0.0	11.5	21.4	3.1	0.0	1.6	0.0	0.0
Initial Queue Delay (d3), s/veh	0.0	0.0	0.0	0.0	0.0	0.0	0.0	0.0
Control Delay (d), s/veh	0.0	50.3	85.8	58.4	0.0	33.1	0.0	0.0
First-Term Queue (Q1), veh/ln	0.0	24.8	10.7	9.4	0.0	15.3	0.0	0.0
Second-Term Queue (Q2), veh/ln	0.0	2.6	1.8	0.3	0.0	0.4	0.0	0.0
Third-Term Queue (Q3), veh/ln	0.0	0.0	0.0	0.0	0.0	0.0	0.0	0.0
Percentile bk-of-que factor (f_B%)	0.000	1.000	1.000	1.000	0.000	1.000	0.000	0.000
Percentile Back of Queue (Q%), veh/ln	0.0	27.4	12.6	9.8	0.0	15.6	0.0	0.0
Percentile Storage Ratio (RQ%)	0.00	1.52	0.17	0.72	0.00	0.54	0.00	0.00
Initial Queue (Qb), veh	0.0	0.0	0.0	0.0	0.0	0.0	0.0	0.0
Final (Residual) Queue (Qe), veh	0.0	0.0	0.0	0.0	0.0	0.0	0.0	0.0
Saturated Delay (ds), s/veh	0.0	0.0	0.0	0.0	0.0	0.0	0.0	0.0
Saturated Queue (Qs), veh	0.0	0.0	0.0	0.0	0.0	0.0	0.0	0.0
Saturated Capacity (cs), veh/h	0.0	0.0	0.0	0.0	0.0	0.0	0.0	0.0
Initial Queue Clear Time (tc), h	0.0	0.0	0.0	0.0	0.0	0.0	0.0	0.0
Intersection Summary								
HCM Average Control Delay		54.2						
HCM Level of Service		D						

Movement	EBL	EBT	EBR	WBL	WBT	WBR	NEL	NET	NER	SWL	SWT	SWR
Lane Configurations												
Volume (veh/h)	13	4	0	0	5	9	32	2305	19	0	0	0
Sign Control		Stop			Stop			Free			Free	
Grade		0%			0%			0%			0%	
Peak Hour Factor	0.96	0.96	0.96	0.96	0.96	0.96	0.96	0.96	0.96	0.96	0.96	0.96
Hourly flow rate (vph)	14	4	0	0	5	9	33	2401	20	0	0	0
Pedestrians												
Lane Width (ft)												
Walking Speed (ft/s)												
Percent Blockage												
Right turn flare (veh)												
Median type								None			None	
Median storage veh)												
Upstream signal (ft)												
pX, platoon unblocked												
vC, conflicting volume	879	2488	0	2480	2478	810	0			2421		
vC1, stage 1 conf vol												
vC2, stage 2 conf vol												
vCu, unblocked vol	879	2488	0	2480	2478	810	0			2421		
tC, single (s)	7.5	6.5	6.9	7.5	6.5	6.9	4.1			4.1		
tC, 2 stage (s)												
tF (s)	3.5	4.0	3.3	3.5	4.0	3.3	2.2			2.2		
p0 queue free %	93	85	100	100	82	97	98			100		
cM capacity (veh/h)	199	28	1084	13	29	323	1622			193		

Direction, Lane #	EB 1	WB 1	NE 1	NE 2	NE 3
Volume Total	18	15	634	1201	620
Volume Left	14	0	33	0	0
Volume Right	0	9	0	0	20
cSH	82	69	1622	1700	1700
Volume to Capacity	0.22	0.21	0.02	0.71	0.36
Queue Length 95th (ft)	19	18	2	0	0
Control Delay (s)	60.4	70.2	0.6	0.0	0.0
Lane LOS	F	F	A		
Approach Delay (s)	60.4	70.2	0.2		
Approach LOS	F	F			

Intersection Summary			
Average Delay	1.0		
Intersection Capacity Utilization	59.9%	ICU Level of Service	B
Analysis Period (min)	15		

Movement	EBL	EBT	EBR	WBL	WBT	WBR	NEL	NET	NER	SWL	SWT	SWR
Lane Configurations												
Volume (veh/h)	2	10	0	0	10	11	5	2325	21	0	0	0
Sign Control		Stop			Stop			Free			Free	
Grade		0%			0%			0%			0%	
Peak Hour Factor	0.93	0.93	0.93	0.93	0.93	0.93	0.93	0.93	0.93	0.93	0.93	0.93
Hourly flow rate (vph)	2	11	0	0	11	12	5	2500	23	0	0	0
Pedestrians												
Lane Width (ft)												
Walking Speed (ft/s)												
Percent Blockage												
Right turn flare (veh)												
Median type								None			None	
Median storage veh)												
Upstream signal (ft)												
pX, platoon unblocked												
vC, conflicting volume	861	2533	0	2527	2522	845	0			2523		
vC1, stage 1 conf vol												
vC2, stage 2 conf vol												
vCu, unblocked vol	861	2533	0	2527	2522	845	0			2523		
tC, single (s)	7.5	6.5	6.9	7.5	6.5	6.9	4.1			4.1		
tC, 2 stage (s)												
tF (s)	3.5	4.0	3.3	3.5	4.0	3.3	2.2			2.2		
p0 queue free %	99	60	100	100	61	96	100			100		
cM capacity (veh/h)	166	27	1084	10	27	306	1622			176		

Direction, Lane #	EB 1	WB 1	NE 1	NE 2	NE 3
Volume Total	13	23	630	1250	648
Volume Left	2	0	5	0	0
Volume Right	0	12	0	0	23
cSH	31	52	1622	1700	1700
Volume to Capacity	0.41	0.43	0.00	0.74	0.38
Queue Length 95th (ft)	33	40	0	0	0
Control Delay (s)	185.0	118.3	0.1	0.0	0.0
Lane LOS	F	F	A		
Approach Delay (s)	185.0	118.3	0.0		
Approach LOS	F	F			

Intersection Summary			
Average Delay	2.0		
Intersection Capacity Utilization	55.5%	ICU Level of Service	B
Analysis Period (min)	15		

HCM Unsignalized Intersection Capacity Analysis
1: SW 97th Ave. & SW 174th St.

2/11/2015

Movement	EBL	EBT	EBR	WBL	WBT	WBR	NBL	NBT	NBR	SBL	SBT	SBR
Lane Configurations												
Sign Control		Stop			Stop			Stop			Stop	
Volume (vph)	6	114	60	54	98	4	44	7	24	4	7	8
Peak Hour Factor	0.84	0.84	0.84	0.84	0.84	0.84	0.84	0.84	0.84	0.84	0.84	0.84
Hourly flow rate (vph)	7	136	71	64	117	5	52	8	29	5	8	10

Direction, Lane #	EB 1	WB 1	NB 1	SB 1
Volume Total (vph)	214	186	89	23
Volume Left (vph)	7	64	52	5
Volume Right (vph)	71	5	29	10
Hadj (s)	-0.16	0.09	-0.04	-0.18
Departure Headway (s)	4.2	4.5	4.8	4.7
Degree Utilization, x	0.25	0.23	0.12	0.03
Capacity (veh/h)	823	767	693	681
Control Delay (s)	8.6	8.8	8.4	7.9
Approach Delay (s)	8.6	8.8	8.4	7.9
Approach LOS	A	A	A	A

Intersection Summary			
Delay	8.6		
HCM Level of Service	A		
Intersection Capacity Utilization	38.4%	ICU Level of Service	A
Analysis Period (min)	15		

Lane Group	EBL	NBT	SBT	NET
Lane Group Flow (vph)	124	266	28	2107
v/c Ratio	1.08	0.65	0.08	0.66
Control Delay	165.5	36.7	47.3	17.8
Queue Delay	0.0	0.0	0.0	0.0
Total Delay	165.5	36.7	47.3	17.8
Queue Length 50th (ft)	~125	125	21	421
Queue Length 95th (ft)	#260	227	50	469
Internal Link Dist (ft)	257	1041	665	1300
Turn Bay Length (ft)				
Base Capacity (vph)	115	410	335	3191
Starvation Cap Reductn	0	0	0	0
Spillback Cap Reductn	0	0	0	0
Storage Cap Reductn	0	0	0	0
Reduced v/c Ratio	1.08	0.65	0.08	0.66

Intersection Summary

~ Volume exceeds capacity, queue is theoretically infinite.
Queue shown is maximum after two cycles.

95th percentile volume exceeds capacity, queue may be longer.
Queue shown is maximum after two cycles.

Movement	EBL	EBR	NBL	NBT	NBR	SBT	SBR	NEL2	NEL	NET	NER
Lane Configurations											
Volume (vph)	2	116	4	21	228	13	13	4	5	1968	25
Ideal Flow (vphpl)	1900	1900	1900	1900	1900	1900	1900	1900	1900	1900	1900
Total Lost time (s)	5.0			5.0		5.0				5.0	
Lane Util. Factor	1.00			1.00		1.00				0.91	
Frt	0.87			0.88		0.93				1.00	
Flt Protected	1.00			1.00		1.00				1.00	
Satd. Flow (prot)	1614			1635		1737				5075	
Flt Permitted	1.00			1.00		1.00				1.00	
Satd. Flow (perm)	1614			1632		1737				5075	
Peak-hour factor, PHF	0.95	0.95	0.95	0.95	0.95	0.95	0.95	0.95	0.95	0.95	0.95
Adj. Flow (vph)	2	122	4	22	240	14	14	4	5	2072	26
RTOR Reduction (vph)	0	0	0	95	0	0	0	0	0	1	0
Lane Group Flow (vph)	124	0	0	171	0	28	0	0	0	2106	0
Turn Type	NA		Perm	NA		NA		Perm	Perm	NA	
Protected Phases	3			4		8				6	
Permitted Phases			4					6	6		
Actuated Green, G (s)	10.0			27.0		27.0				88.0	
Effective Green, g (s)	10.0			27.0		27.0				88.0	
Actuated g/C Ratio	0.07			0.19		0.19				0.63	
Clearance Time (s)	5.0			5.0		5.0				5.0	
Vehicle Extension (s)	3.0			3.0		3.0				3.0	
Lane Grp Cap (vph)	115			315		335				3190	
v/s Ratio Prot	c0.08					0.02					
v/s Ratio Perm				c0.10						0.42	
v/c Ratio	1.08			0.54		0.08				0.66	
Uniform Delay, d1	65.0			50.9		46.4				16.5	
Progression Factor	1.00			1.00		1.00				1.00	
Incremental Delay, d2	106.5			6.6		0.5				1.1	
Delay (s)	171.5			57.5		46.8				17.6	
Level of Service	F			E		D				B	
Approach Delay (s)	171.5			57.5		46.8				17.6	
Approach LOS	F			E		D				B	

Intersection Summary			
HCM Average Control Delay	29.7	HCM Level of Service	C
HCM Volume to Capacity ratio	0.67		
Actuated Cycle Length (s)	140.0	Sum of lost time (s)	15.0
Intersection Capacity Utilization	77.4%	ICU Level of Service	D
Analysis Period (min)	15		
c Critical Lane Group			

Movement	EBL	EBR	NBL	NBT	SBT	SBR
Lane Configurations						
Volume (veh/h)	6	32	28	264	140	5
Sign Control	Stop			Free	Free	
Grade	0%			0%	0%	
Peak Hour Factor	0.93	0.93	0.93	0.93	0.93	0.93
Hourly flow rate (vph)	6	34	30	284	151	5
Pedestrians						
Lane Width (ft)						
Walking Speed (ft/s)						
Percent Blockage						
Right turn flare (veh)						
Median type				None	None	
Median storage veh)						
Upstream signal (ft)					1121	
pX, platoon unblocked						
vC, conflicting volume	497	153	156			
vC1, stage 1 conf vol						
vC2, stage 2 conf vol						
vCu, unblocked vol	497	153	156			
tC, single (s)	6.4	6.2	4.1			
tC, 2 stage (s)						
tF (s)	3.5	3.3	2.2			
p0 queue free %	99	96	98			
cM capacity (veh/h)	521	893	1424			

Direction, Lane #	EB 1	NB 1	SB 1
Volume Total	41	314	156
Volume Left	6	30	0
Volume Right	34	0	5
cSH	802	1424	1700
Volume to Capacity	0.05	0.02	0.09
Queue Length 95th (ft)	4	2	0
Control Delay (s)	9.7	0.9	0.0
Lane LOS	A	A	
Approach Delay (s)	9.7	0.9	0.0
Approach LOS	A		

Intersection Summary			
Average Delay	1.3		
Intersection Capacity Utilization	36.4%	ICU Level of Service	A
Analysis Period (min)	15		

Movement	WBL	WBR	NBT	NBR	SBL	SBT
Lane Configurations						
Volume (veh/h)	39	32	268	11	24	136
Sign Control	Stop		Free			Free
Grade	0%		0%			0%
Peak Hour Factor	0.97	0.97	0.97	0.97	0.97	0.97
Hourly flow rate (vph)	40	33	276	11	25	140
Pedestrians						
Lane Width (ft)						
Walking Speed (ft/s)						
Percent Blockage						
Right turn flare (veh)						
Median type			None			None
Median storage veh)						
Upstream signal (ft)						
pX, platoon unblocked						
vC, conflicting volume	472	282			288	
vC1, stage 1 conf vol						
vC2, stage 2 conf vol						
vCu, unblocked vol	472	282			288	
tC, single (s)	6.4	6.2			4.1	
tC, 2 stage (s)						
tF (s)	3.5	3.3			2.2	
p0 queue free %	93	96			98	
cM capacity (veh/h)	540	757			1274	

Direction, Lane #	WB 1	NB 1	SB 1
Volume Total	73	288	165
Volume Left	40	0	25
Volume Right	33	11	0
cSH	620	1700	1274
Volume to Capacity	0.12	0.17	0.02
Queue Length 95th (ft)	10	0	1
Control Delay (s)	11.6	0.0	1.3
Lane LOS	B		A
Approach Delay (s)	11.6	0.0	1.3
Approach LOS	B		

Intersection Summary			
Average Delay	2.0		
Intersection Capacity Utilization	37.4%	ICU Level of Service	A
Analysis Period (min)	15		

Movement	EBL	EBR	NBL	NBT	SBT	SBR
Lane Configurations						
Volume (veh/h)	9	23	6	291	166	2
Sign Control	Stop			Free	Free	
Grade	0%			0%	0%	
Peak Hour Factor	0.94	0.94	0.94	0.94	0.94	0.94
Hourly flow rate (vph)	10	24	6	310	177	2
Pedestrians						
Lane Width (ft)						
Walking Speed (ft/s)						
Percent Blockage						
Right turn flare (veh)						
Median type				None	None	
Median storage veh)						
Upstream signal (ft)				1230		
pX, platoon unblocked	0.96					
vC, conflicting volume	500	178	179			
vC1, stage 1 conf vol						
vC2, stage 2 conf vol						
vCu, unblocked vol	459	178	179			
tC, single (s)	6.4	6.2	4.1			
tC, 2 stage (s)						
tF (s)	3.5	3.3	2.2			
p0 queue free %	98	97	100			
cM capacity (veh/h)	536	865	1397			

Direction, Lane #	EB 1	NB 1	SB 1
Volume Total	34	316	179
Volume Left	10	6	0
Volume Right	24	0	2
cSH	738	1397	1700
Volume to Capacity	0.05	0.00	0.11
Queue Length 95th (ft)	4	0	0
Control Delay (s)	10.1	0.2	0.0
Lane LOS	B	A	
Approach Delay (s)	10.1	0.2	0.0
Approach LOS	B		

Intersection Summary			
Average Delay	0.8		
Intersection Capacity Utilization	30.1%	ICU Level of Service	A
Analysis Period (min)	15		

Movement	EBL	EBT	EBR	WBL	WBT	WBR	NBL	NBT	NBR	SBL	SBT	SBR
Lane Configurations												
Volume (veh/h)	1	0	6	5	2	3	5	303	5	2	193	6
Sign Control		Stop			Stop			Free			Free	
Grade		0%			0%			0%			0%	
Peak Hour Factor	0.92	0.92	0.92	0.92	0.92	0.92	0.92	0.92	0.92	0.92	0.92	0.92
Hourly flow rate (vph)	1	0	7	5	2	3	5	329	5	2	210	7
Pedestrians												
Lane Width (ft)												
Walking Speed (ft/s)												
Percent Blockage												
Right turn flare (veh)												
Median type								None			None	
Median storage veh)												
Upstream signal (ft)								904				
pX, platoon unblocked	0.92	0.92		0.92	0.92	0.92				0.92		
vC, conflicting volume	565	563	213	567	564	332	216			335		
vC1, stage 1 conf vol												
vC2, stage 2 conf vol												
vCu, unblocked vol	480	478	213	482	479	226	216			229		
tC, single (s)	7.1	6.5	6.2	7.1	6.5	6.2	4.1			4.1		
tC, 2 stage (s)												
tF (s)	3.5	4.0	3.3	3.5	4.0	3.3	2.2			2.2		
p0 queue free %	100	100	99	99	100	100	100			100		
cM capacity (veh/h)	449	443	827	448	443	746	1353			1228		

Direction, Lane #	EB 1	WB 1	NB 1	SB 1
Volume Total	8	11	340	218
Volume Left	1	5	5	2
Volume Right	7	3	5	7
cSH	738	507	1353	1228
Volume to Capacity	0.01	0.02	0.00	0.00
Queue Length 95th (ft)	1	2	0	0
Control Delay (s)	9.9	12.2	0.2	0.1
Lane LOS	A	B	A	A
Approach Delay (s)	9.9	12.2	0.2	0.1
Approach LOS	A	B		

Intersection Summary			
Average Delay	0.5		
Intersection Capacity Utilization	29.4%	ICU Level of Service	A
Analysis Period (min)	15		

Movement	EBL	EBT	EBR	WBL	WBT	WBR	NBL	NBT	NBR	SBL	SBT	SBR
Lane Configurations												
Volume (veh/h)	0	0	2	1	1	2	2	311	1	1	211	2
Sign Control		Stop			Stop			Free			Free	
Grade		0%			0%			0%			0%	
Peak Hour Factor	0.95	0.95	0.95	0.95	0.95	0.95	0.95	0.95	0.95	0.95	0.95	0.95
Hourly flow rate (vph)	0	0	2	1	1	2	2	327	1	1	222	2
Pedestrians												
Lane Width (ft)												
Walking Speed (ft/s)												
Percent Blockage												
Right turn flare (veh)												
Median type								None			None	
Median storage veh)												
Upstream signal (ft)								601				
pX, platoon unblocked	0.90	0.90		0.90	0.90	0.90				0.90		
vC, conflicting volume	560	558	223	559	558	328	224			328		
vC1, stage 1 conf vol												
vC2, stage 2 conf vol												
vCu, unblocked vol	460	457	223	459	458	203	224			203		
tC, single (s)	7.1	6.5	6.2	7.1	6.5	6.2	4.1			4.1		
tC, 2 stage (s)												
tF (s)	3.5	4.0	3.3	3.5	4.0	3.3	2.2			2.2		
p0 queue free %	100	100	100	100	100	100	100			100		
cM capacity (veh/h)	459	450	816	461	450	757	1344			1236		

Direction, Lane #	EB 1	WB 1	NB 1	SB 1
Volume Total	2	4	331	225
Volume Left	0	1	2	1
Volume Right	2	2	1	2
cSH	816	569	1344	1236
Volume to Capacity	0.00	0.01	0.00	0.00
Queue Length 95th (ft)	0	1	0	0
Control Delay (s)	9.4	11.4	0.1	0.0
Lane LOS	A	B	A	A
Approach Delay (s)	9.4	11.4	0.1	0.0
Approach LOS	A	B		

Intersection Summary			
Average Delay	0.2		
Intersection Capacity Utilization	27.8%	ICU Level of Service	A
Analysis Period (min)	15		

Movement	EBL	EBT	EBR	WBL	WBT	WBR	NBL	NBT	NBR	SBL	SBT	SBR
Lane Configurations												
Volume (veh/h)	4	0	21	3	1	2	5	307	2	0	212	1
Sign Control		Stop			Stop			Free			Free	
Grade		0%			0%			0%			0%	
Peak Hour Factor	0.97	0.97	0.97	0.97	0.97	0.97	0.97	0.97	0.97	0.97	0.97	0.97
Hourly flow rate (vph)	4	0	22	3	1	2	5	316	2	0	219	1
Pedestrians												
Lane Width (ft)												
Walking Speed (ft/s)												
Percent Blockage												
Right turn flare (veh)												
Median type								None			None	
Median storage veh)												
Upstream signal (ft)								300				
pX, platoon unblocked	0.90	0.90		0.90	0.90	0.90				0.90		
vC, conflicting volume	549	548	219	569	547	318	220			319		
vC1, stage 1 conf vol												
vC2, stage 2 conf vol												
vCu, unblocked vol	443	441	219	464	440	185	220			186		
tC, single (s)	7.1	6.5	6.2	7.1	6.5	6.2	4.1			4.1		
tC, 2 stage (s)												
tF (s)	3.5	4.0	3.3	3.5	4.0	3.3	2.2			2.2		
p0 queue free %	99	100	97	99	100	100	100			100		
cM capacity (veh/h)	469	457	821	444	457	771	1350			1248		

Direction, Lane #	EB 1	WB 1	NB 1	SB 1
Volume Total	26	6	324	220
Volume Left	4	3	5	0
Volume Right	22	2	2	1
cSH	733	520	1350	1248
Volume to Capacity	0.04	0.01	0.00	0.00
Queue Length 95th (ft)	3	1	0	0
Control Delay (s)	10.1	12.0	0.2	0.0
Lane LOS	B	B	A	
Approach Delay (s)	10.1	12.0	0.2	0.0
Approach LOS	B	B		

Intersection Summary			
Average Delay	0.7		
Intersection Capacity Utilization	30.3%	ICU Level of Service	A
Analysis Period (min)	15		

Lane Group	EBL	EBT	EBR	WBL	WBT	NBL	NBT	SBL	SBT
Lane Group Flow (vph)	67	366	58	82	430	121	279	23	221
v/c Ratio	0.12	0.67	0.15	0.16	0.38	0.24	0.34	0.06	0.36
Control Delay	11.7	30.9	9.4	11.9	23.1	20.6	26.6	19.2	31.1
Queue Delay	0.0	0.0	0.0	0.0	0.0	0.0	0.0	0.0	0.0
Total Delay	11.7	30.9	9.4	11.9	23.1	20.6	26.6	19.2	31.1
Queue Length 50th (ft)	15	132	0	19	88	43	60	8	52
Queue Length 95th (ft)	41	242	31	48	147	89	102	25	92
Internal Link Dist (ft)		1915			422		229		156
Turn Bay Length (ft)	130			95		155		130	
Base Capacity (vph)	547	719	533	530	1469	514	1508	394	1297
Starvation Cap Reductn	0	0	0	0	0	0	0	0	0
Spillback Cap Reductn	0	0	0	0	0	0	0	0	0
Storage Cap Reductn	0	0	0	0	0	0	0	0	0
Reduced v/c Ratio	0.12	0.51	0.11	0.15	0.29	0.24	0.19	0.06	0.17

Intersection Summary

Movement	EBL	EBT	EBR	WBL	WBT	WBR	NBL	NBT	NBR	SBL	SBT	SBR
Lane Configurations												
Volume (vph)	61	333	53	75	374	17	110	217	37	21	168	33
Ideal Flow (vphpl)	1900	1900	1900	1900	1900	1900	1900	1900	1900	1900	1900	1900
Total Lost time (s)	3.0	3.0	5.0	3.0	3.0		3.0	3.0		3.0	3.0	
Lane Util. Factor	1.00	1.00	1.00	1.00	0.95		1.00	0.95		1.00	0.95	
Frt	1.00	1.00	0.85	1.00	0.99		1.00	0.98		1.00	0.98	
Flt Protected	0.95	1.00	1.00	0.95	1.00		0.95	1.00		0.95	1.00	
Satd. Flow (prot)	1770	1863	1583	1770	3516		1770	3461		1770	3453	
Flt Permitted	0.50	1.00	1.00	0.54	1.00		0.61	1.00		0.58	1.00	
Satd. Flow (perm)	934	1863	1583	1012	3516		1143	3461		1081	3453	
Peak-hour factor, PHF	0.91	0.91	0.91	0.91	0.91	0.91	0.91	0.91	0.91	0.91	0.91	0.91
Adj. Flow (vph)	67	366	58	82	411	19	121	238	41	23	185	36
RTOR Reduction (vph)	0	0	46	0	3	0	0	13	0	0	17	0
Lane Group Flow (vph)	67	366	12	82	427	0	121	266	0	23	204	0
Turn Type	custom	NA	custom	custom	NA		custom	NA		custom	NA	
Protected Phases	1 2	2 4		1 3	3 4		5 6	6 8		5 7	7 8	
Permitted Phases	4		4	4			8			8		
Actuated Green, G (s)	32.4	22.5	18.3	29.8	25.9		25.6	15.5		18.6	14.5	
Effective Green, g (s)	32.4	22.5	18.3	29.8	25.9		25.6	15.5		18.6	14.5	
Actuated g/C Ratio	0.37	0.26	0.21	0.34	0.30		0.30	0.18		0.21	0.17	
Clearance Time (s)			5.0									
Vehicle Extension (s)			3.0									
Lane Grp Cap (vph)	486	484	335	449	1052		454	619		305	578	
v/s Ratio Prot	0.02	c0.20		c0.02	c0.12		c0.05	c0.08		0.01	c0.06	
v/s Ratio Perm	0.03		0.01	0.04			0.03			0.01		
v/c Ratio	0.14	0.76	0.04	0.18	0.41		0.27	0.43		0.08	0.35	
Uniform Delay, d1	17.6	29.5	27.1	19.5	24.2		23.1	31.6		27.0	31.9	
Progression Factor	1.00	1.00	1.00	1.00	1.00		1.00	1.00		1.00	1.00	
Incremental Delay, d2	0.1	6.6	0.0	0.2	0.3		0.3	0.5		0.1	0.4	
Delay (s)	17.8	36.2	27.2	19.7	24.5		23.4	32.1		27.2	32.3	
Level of Service	B	D	C	B	C		C	C		C	C	
Approach Delay (s)		32.6			23.7			29.5			31.8	
Approach LOS		C			C			C			C	

Intersection Summary			
HCM Average Control Delay	29.0	HCM Level of Service	C
HCM Volume to Capacity ratio	0.46		
Actuated Cycle Length (s)	86.6	Sum of lost time (s)	21.0
Intersection Capacity Utilization	46.8%	ICU Level of Service	A
Analysis Period (min)	15		
c Critical Lane Group			

Movement	EBL	EBT	WBT	WBR	SBL	SBR
Lane Configurations						
Volume (veh/h)	3	403	477	8	6	1
Sign Control		Free	Free		Stop	
Grade		0%	0%		0%	
Peak Hour Factor	0.94	0.94	0.94	0.94	0.94	0.94
Hourly flow rate (vph)	3	429	507	9	6	1
Pedestrians						
Lane Width (ft)						
Walking Speed (ft/s)						
Percent Blockage						
Right turn flare (veh)						
Median type		None	None			
Median storage veh)						
Upstream signal (ft)		502				
pX, platoon unblocked					0.82	
vC, conflicting volume	516				947	512
vC1, stage 1 conf vol						
vC2, stage 2 conf vol						
vCu, unblocked vol	516				823	512
tC, single (s)	4.1				6.4	6.2
tC, 2 stage (s)						
tF (s)	2.2				3.5	3.3
p0 queue free %	100				98	100
cM capacity (veh/h)	1050				280	562

Direction, Lane #	EB 1	EB 2	WB 1	SB 1
Volume Total	3	429	516	7
Volume Left	3	0	0	6
Volume Right	0	0	9	1
cSH	1050	1700	1700	301
Volume to Capacity	0.00	0.25	0.30	0.02
Queue Length 95th (ft)	0	0	0	2
Control Delay (s)	8.4	0.0	0.0	17.3
Lane LOS	A			C
Approach Delay (s)	0.1		0.0	17.3
Approach LOS				C

Intersection Summary			
Average Delay	0.2		
Intersection Capacity Utilization	35.6%	ICU Level of Service	A
Analysis Period (min)	15		

Lane Group	EBL	EBT	WBL	WBT	NBL	NBT	SBL	SBT
Lane Group Flow (vph)	272	420	235	485	122	1615	187	1876
v/c Ratio	0.96	0.74	0.93	0.92	0.62	0.71	0.79	0.79
Control Delay	101.2	60.3	97.6	80.6	37.8	32.6	54.0	33.8
Queue Delay	0.0	0.0	0.0	0.0	0.0	0.0	0.0	0.0
Total Delay	101.2	60.3	97.6	80.6	37.8	32.6	54.0	33.8
Queue Length 50th (ft)	248	181	234	240	54	427	106	502
Queue Length 95th (ft)	#435	243	#416	#352	117	490	#212	610
Internal Link Dist (ft)		364		1915		469		768
Turn Bay Length (ft)			286		160		130	
Base Capacity (vph)	284	569	258	536	262	2277	265	2367
Starvation Cap Reductn	0	0	0	0	0	0	0	0
Spillback Cap Reductn	0	0	0	0	0	0	0	0
Storage Cap Reductn	0	0	0	0	0	0	0	0
Reduced v/c Ratio	0.96	0.74	0.91	0.90	0.47	0.71	0.71	0.79

Intersection Summary

95th percentile volume exceeds capacity, queue may be longer.
Queue shown is maximum after two cycles.

Movement	EBL	EBT	EBR	WBL	WBT	WBR	NBL	NBT	NBR	SBL	SBT	SBR
Lane Configurations												
Volume (vph)	256	296	99	321	340	16	115	1405	113	176	1558	206
Ideal Flow (vphpl)	1900	1900	1900	1900	1900	1900	1900	1900	1900	1900	1900	1900
Total Lost time (s)	5.0	5.0		5.0	5.0		3.0	5.0		3.0	5.0	
Lane Util. Factor	1.00	0.95		0.91	0.91		1.00	0.91		1.00	0.91	
Frt	1.00	0.96		1.00	0.99		1.00	0.99		1.00	0.98	
Flt Protected	0.95	1.00		0.95	0.99		0.95	1.00		0.95	1.00	
Satd. Flow (prot)	1770	3406		1610	3336		1770	5029		1770	4996	
Flt Permitted	0.95	1.00		0.95	0.99		0.06	1.00		0.07	1.00	
Satd. Flow (perm)	1770	3406		1610	3336		120	5029		124	4996	
Peak-hour factor, PHF	0.94	0.94	0.94	0.94	0.94	0.94	0.94	0.94	0.94	0.94	0.94	0.94
Adj. Flow (vph)	272	315	105	341	362	17	122	1495	120	187	1657	219
RTOR Reduction (vph)	0	24	0	0	2	0	0	7	0	0	12	0
Lane Group Flow (vph)	272	396	0	235	483	0	122	1608	0	187	1864	0
Turn Type	Split	NA		Split	NA		pm+pt	NA		pm+pt	NA	
Protected Phases	4	4		8	8		5	2		1	6	
Permitted Phases							2			6		
Actuated Green, G (s)	22.0	22.0		21.6	21.6		72.9	62.0		78.5	64.8	
Effective Green, g (s)	22.0	22.0		21.6	21.6		72.9	62.0		78.5	64.8	
Actuated g/C Ratio	0.16	0.16		0.16	0.16		0.53	0.45		0.57	0.47	
Clearance Time (s)	5.0	5.0		5.0	5.0		3.0	5.0		3.0	5.0	
Vehicle Extension (s)	3.0	3.0		3.0	3.0		3.0	3.0		3.0	3.0	
Lane Grp Cap (vph)	284	546		253	525		195	2271		235	2358	
v/s Ratio Prot	c0.15	0.12		c0.15	0.14		0.05	0.32		c0.08	0.37	
v/s Ratio Perm							0.28			c0.37		
v/c Ratio	0.96	0.73		0.93	0.92		0.63	0.71		0.80	0.79	
Uniform Delay, d1	57.2	54.8		57.1	57.0		25.1	30.4		35.3	30.5	
Progression Factor	1.00	1.00		1.00	1.00		1.00	1.00		1.00	1.00	
Incremental Delay, d2	41.5	4.8		37.4	21.6		6.1	1.9		16.8	1.9	
Delay (s)	98.7	59.6		94.5	78.6		31.3	32.3		52.1	32.4	
Level of Service	F	E		F	E		C	C		D	C	
Approach Delay (s)		75.0			83.8			32.2			34.2	
Approach LOS		E			F			C			C	

Intersection Summary			
HCM Average Control Delay	45.8	HCM Level of Service	D
HCM Volume to Capacity ratio	0.85		
Actuated Cycle Length (s)	137.3	Sum of lost time (s)	16.0
Intersection Capacity Utilization	83.9%	ICU Level of Service	E
Analysis Period (min)	15		
c Critical Lane Group			

Movement	EBL	EBT	EBR	WBL	WBT	WBR	NBL	NBT	NBR	SBL	SBT	SBR
Lane Configurations												
Volume (vph)	256	296	99	321	340	16	115	1405	113	176	1558	206
Movement Number	7	4	14	3	8	18	5	2	12	1	6	16
Initial Queue, veh	0	0	0	0	0	0	0	0	0	0	0	0
Ped-Bike Adj. Factor (A_pbT)	1.00		1.00	1.00		1.00	1.00		1.00	1.00		1.00
Parking, Bus Adj. Factors	1.00	1.00	1.00	1.00	1.00	1.00	1.00	1.00	1.00	1.00	1.00	1.00
Adj. Sat. Flow Rate, veh/h/ln	1863	1863	1863	1863	1863	1863	1863	1863	1863	1863	1863	1863
Lanes	1	2	0	1	2	0	1	3	0	1	3	0
Lane Assignment												
Capacity, veh/h	293	444	146	293	583	27	190	2234	180	246	2196	289
Proportion Arriving On Green	0.17	0.17	0.17	0.17	0.17	0.17	0.05	0.47	0.47	0.07	0.48	0.48
Movement Delay, s/veh	89.3	59.6	61.5	160.7	55.4	55.6	30.2	29.9	31.9	31.6	30.0	32.1
Movement LOS	F	E	E	F	E	E	C	C	C	C	C	C
Approach Volume, veh/h		693			720			1737			2064	
Approach Delay, s/veh		71.8			105.4			30.6			30.8	
Approach LOS		E			F			C			C	

Timer:	1	2	3	4	5	6	7	8
Assigned Phase	1	2	8	4	5	6		
Case No	1.1	4.0	10.0	10.0	1.1	4.0		
Phase Duration (G+Y+Rc), s	12.19	67.00	27.00	27.00	9.89	69.30		
Change Period (Y+Rc), s	3.00	5.00	5.00	5.00	3.00	5.00		
Max. Allowable Headway (MAH), s	4.00	3.94	3.96	3.99	4.00	3.94		
Maximum Green Setting (Gmax), s	16.00	62.00	22.00	22.00	16.00	62.00		
Max. Queue Clearance Time (g_c+I1), s	8.89	34.22	24.00	22.16	6.76	41.72		
Green Extension Time (g_e), s	0.31	20.10	0.00	0.00	0.20	15.82		
Probability of Phase Call (p_c)	0.999	1.000	1.000	1.000	0.989	1.000		
Probability of Max Out (p_x)	0.096	0.672	1.000	1.000	0.008	0.761		

Left-Turn Movement Data					
Assigned Movement	1		3	7	5
Mvmt. Sat Flow, veh/h	1774.04		1774.04	1774.04	1774.04

Through Movement Data					
Assigned Movement		2	8	4	6
Mvmt. Sat Flow, veh/h		4798.99	3530.63	2687.70	4547.94

Right-Turn Movement Data					
Assigned Movement		12	18	14	16
Mvmt. Sat Flow, veh/h		385.86	165.63	882.12	599.25

Left Lane Group Data								
Assigned Movement	1	0	3	7	5	0	0	0
Lane Assignment	L (Pr/Pm)		L	LL (Pr/Pm)				
Lanes in Group	1	0	1	1	1	0	0	0
Group Volume (v), veh/h	187.2	0.0	341.5	272.3	122.3	0.0	0.0	0.0
Group Sat. Flow (s), veh/h/ln	1774.0	0.0	1774.0	1774.0	1774.0	0.0	0.0	0.0
Queue Serve Time (g_s), s	6.9	0.0	22.0	20.2	4.8	0.0	0.0	0.0
Cycle Queue Clear Time (g_c), s	6.9	0.0	22.0	20.2	4.8	0.0	0.0	0.0

Perm LT Sat Flow Rate (s_l), veh/h/ln	311.9	0.0	1774.0	1774.0	241.9	0.0	0.0	0.0
Shared LT Sat Flow (s_sh), veh/h/ln	0.0	0.0	0.0	0.0	0.0	0.0	0.0	0.0
Perm LT Eff. Green (g_p), s	65.6	0.0	0.0	0.0	62.0	0.0	0.0	0.0
Perm LT Serve Time (g_u), s	29.8	0.0	0.0	0.0	24.6	0.0	0.0	0.0
Perm LT Que Serve Time (g_ps), s	29.8	0.0	0.0	0.0	24.6	0.0	0.0	0.0
Time to First Blk (g_f), s	0.0	0.0	0.0	0.0	0.0	0.0	0.0	0.0
Serve Time pre Blk (g_fs), s	0.0	0.0	0.0	0.0	0.0	0.0	0.0	0.0
Proportion LT Inside Lane (P_L)	1.000	0.000	1.000	1.000	1.000	0.000	0.000	0.000
Lane Group Capacity (c), veh/h	246.2	0.0	293.0	293.0	190.5	0.0	0.0	0.0
Volume-to-Capacity Ratio (X)	0.760	0.000	1.165	0.929	0.642	0.000	0.000	0.000
Available Capacity (c_a), veh/h	336.9	0.0	293.0	293.0	311.8	0.0	0.0	0.0
Upstream Filter Factor (I)	1.000	0.000	1.000	1.000	1.000	0.000	0.000	0.000
Uniform Delay (d1), s/veh	24.9	0.0	55.6	54.8	26.6	0.0	0.0	0.0
Incremental Delay (d2), s/veh	6.6	0.0	105.1	34.5	3.6	0.0	0.0	0.0
Initial Queue Delay (d3), s/veh	0.0	0.0	0.0	0.0	0.0	0.0	0.0	0.0
Control Delay (d), s/veh	31.6	0.0	160.7	89.3	30.2	0.0	0.0	0.0
First-Term Queue (Q1), veh/ln	3.4	0.0	9.8	9.0	2.1	0.0	0.0	0.0
Second-Term Queue (Q2), veh/ln	0.5	0.0	8.6	2.8	0.2	0.0	0.0	0.0
Third-Term Queue (Q3), veh/ln	0.0	0.0	0.0	0.0	0.0	0.0	0.0	0.0
Percentile bk-of-que factor (f_B%)	1.000	0.000	1.000	1.000	1.000	0.000	0.000	0.000
Percentile Back of Queue (Q%), veh/ln	3.9	0.0	18.4	11.8	2.3	0.0	0.0	0.0
Percentile Storage Ratio (RQ%)	0.76	0.00	1.63	0.87	0.36	0.00	0.00	0.00
Initial Queue (Qb), veh	0.0	0.0	0.0	0.0	0.0	0.0	0.0	0.0
Final (Residual) Queue (Qe), veh	0.0	0.0	12.1	0.0	0.0	0.0	0.0	0.0
Saturated Delay (ds), s/veh	0.0	0.0	0.0	0.0	0.0	0.0	0.0	0.0
Saturated Queue (Qs), veh	0.0	0.0	0.0	0.0	0.0	0.0	0.0	0.0
Saturated Capacity (cs), veh/h	0.0	0.0	0.0	0.0	0.0	0.0	0.0	0.0
Initial Queue Clear Time (tc), h	0.0	0.0	0.3	0.0	0.0	0.0	0.0	0.0
Middle Lane Group Data								
Assigned Movement	0	2	8	4	0	6	0	0
Lane Assignment		T	T	T		T		
Lanes in Group	0	2	1	1	0	2	0	0
Group Volume (v), veh/h	0.0	1055.8	190.3	216.4	0.0	1234.1	0.0	0.0
Group Sat. Flow (s), veh/h/ln	0.0	1695.1	1862.7	1862.7	0.0	1695.1	0.0	0.0
Queue Serve Time (g_s), s	0.0	32.2	12.7	14.6	0.0	39.4	0.0	0.0
Cycle Queue Clear Time (g_c), s	0.0	32.2	12.7	14.6	0.0	39.4	0.0	0.0
Lane Group Capacity (c), veh/h	0.0	1578.1	307.7	307.7	0.0	1636.7	0.0	0.0
Volume-to-Capacity Ratio (X)	0.000	0.669	0.619	0.703	0.000	0.754	0.000	0.000
Available Capacity (c_a), veh/h	0.0	1578.1	307.7	307.7	0.0	1636.7	0.0	0.0
Upstream Filter Factor (I)	0.000	1.000	1.000	1.000	0.000	1.000	0.000	0.000
Uniform Delay (d1), s/veh	0.0	27.6	51.7	52.5	0.0	28.0	0.0	0.0
Incremental Delay (d2), s/veh	0.0	2.3	3.7	7.0	0.0	2.0	0.0	0.0
Initial Queue Delay (d3), s/veh	0.0	0.0	0.0	0.0	0.0	0.0	0.0	0.0
Control Delay (d), s/veh	0.0	29.9	55.4	59.6	0.0	30.0	0.0	0.0
First-Term Queue (Q1), veh/ln	0.0	12.9	5.9	6.9	0.0	15.8	0.0	0.0
Second-Term Queue (Q2), veh/ln	0.0	0.5	0.3	0.6	0.0	0.5	0.0	0.0
Third-Term Queue (Q3), veh/ln	0.0	0.0	0.0	0.0	0.0	0.0	0.0	0.0
Percentile bk-of-que factor (f_B%)	0.000	1.000	1.000	1.000	0.000	1.000	0.000	0.000
Percentile Back of Queue (Q%), veh/ln	0.0	13.4	6.3	7.5	0.0	16.2	0.0	0.0
Percentile Storage Ratio (RQ%)	0.00	0.75	0.09	0.55	0.00	0.56	0.00	0.00

Initial Queue (Qb), veh	0.0	0.0	0.0	0.0	0.0	0.0	0.0	0.0
Final (Residual) Queue (Qe), veh	0.0	0.0	0.0	0.0	0.0	0.0	0.0	0.0
Saturated Delay (ds), s/veh	0.0	0.0	0.0	0.0	0.0	0.0	0.0	0.0
Saturated Queue (Qs), veh	0.0	0.0	0.0	0.0	0.0	0.0	0.0	0.0
Saturated Capacity (cs), veh/h	0.0	0.0	0.0	0.0	0.0	0.0	0.0	0.0
Initial Queue Clear Time (tc), h	0.0	0.0	0.0	0.0	0.0	0.0	0.0	0.0

Right Lane Group Data								
Assigned Movement	0	12	18	14	0	16	0	0
Lane Assignment		T+R	T+R	T+R		T+R		
Lanes in Group	0	1	1	1	0	1	0	0
Group Volume (v), veh/h	0.0	559.1	188.4	203.8	0.0	642.5	0.0	0.0
Group Sat. Flow (s), veh/h/ln	0.0	1794.7	1833.5	1707.1	0.0	1757.0	0.0	0.0
Queue Serve Time (g_s), s	0.0	32.2	12.7	15.1	0.0	39.7	0.0	0.0
Cycle Queue Clear Time (g_c), s	0.0	32.2	12.7	15.1	0.0	39.7	0.0	0.0
Prot RT Sat Flow Rate (s_R), veh/h/ln	0.0	0.0	0.0	0.0	0.0	0.0	0.0	0.0
Prot RT Eff. Green (g_R), s	0.0	0.0	0.0	0.0	0.0	0.0	0.0	0.0
Proportion RT Outside Lane (P_R)	0.000	0.215	0.090	0.517	0.000	0.341	0.000	0.000
Lane Group Capacity (c), veh/h	0.0	835.4	302.9	282.0	0.0	848.2	0.0	0.0
Volume-to-Capacity Ratio (X)	0.000	0.669	0.622	0.723	0.000	0.758	0.000	0.000
Available Capacity (c_a), veh/h	0.0	835.4	302.9	282.0	0.0	848.2	0.0	0.0
Upstream Filter Factor (I)	0.000	1.000	1.000	1.000	0.000	1.000	0.000	0.000
Uniform Delay (d1), s/veh	0.0	27.6	51.7	52.7	0.0	28.1	0.0	0.0
Incremental Delay (d2), s/veh	0.0	4.2	3.9	8.8	0.0	4.0	0.0	0.0
Initial Queue Delay (d3), s/veh	0.0	0.0	0.0	0.0	0.0	0.0	0.0	0.0
Control Delay (d), s/veh	0.0	31.9	55.6	61.5	0.0	32.1	0.0	0.0
First-Term Queue (Q1), veh/ln	0.0	13.7	5.9	6.5	0.0	16.5	0.0	0.0
Second-Term Queue (Q2), veh/ln	0.0	1.0	0.3	0.7	0.0	0.9	0.0	0.0
Third-Term Queue (Q3), veh/ln	0.0	0.0	0.0	0.0	0.0	0.0	0.0	0.0
Percentile bk-of-que factor (f_B%)	0.000	1.000	1.000	1.000	0.000	1.000	0.000	0.000
Percentile Back of Queue (Q%), veh/ln	0.0	14.7	6.2	7.2	0.0	17.4	0.0	0.0
Percentile Storage Ratio (RQ%)	0.00	0.82	0.08	0.53	0.00	0.60	0.00	0.00
Initial Queue (Qb), veh	0.0	0.0	0.0	0.0	0.0	0.0	0.0	0.0
Final (Residual) Queue (Qe), veh	0.0	0.0	0.0	0.0	0.0	0.0	0.0	0.0
Saturated Delay (ds), s/veh	0.0	0.0	0.0	0.0	0.0	0.0	0.0	0.0
Saturated Queue (Qs), veh	0.0	0.0	0.0	0.0	0.0	0.0	0.0	0.0
Saturated Capacity (cs), veh/h	0.0	0.0	0.0	0.0	0.0	0.0	0.0	0.0
Initial Queue Clear Time (tc), h	0.0	0.0	0.0	0.0	0.0	0.0	0.0	0.0

Intersection Summary	
HCM Average Control Delay	46.5
HCM Level of Service	D

Movement	EBL	EBT	EBR	WBL	WBT	WBR	NEL	NET	NER	SWL	SWT	SWR
Lane Configurations												
Volume (veh/h)	33	5	0	0	4	11	58	1866	19	0	0	0
Sign Control		Stop			Stop			Free			Free	
Grade		0%			0%			0%			0%	
Peak Hour Factor	0.95	0.95	0.95	0.95	0.95	0.95	0.95	0.95	0.95	0.95	0.95	0.95
Hourly flow rate (vph)	35	5	0	0	4	12	61	1964	20	0	0	0
Pedestrians												
Lane Width (ft)												
Walking Speed (ft/s)												
Percent Blockage												
Right turn flare (veh)												
Median type								None			None	
Median storage veh)												
Upstream signal (ft)												
pX, platoon unblocked												
vC, conflicting volume	791	2106	0	2099	2096	665	0			1984		
vC1, stage 1 conf vol												
vC2, stage 2 conf vol												
vCu, unblocked vol	791	2106	0	2099	2096	665	0			1984		
tC, single (s)	7.5	6.5	6.9	7.5	6.5	6.9	4.1			4.1		
tC, 2 stage (s)												
tF (s)	3.5	4.0	3.3	3.5	4.0	3.3	2.2			2.2		
p0 queue free %	86	89	100	100	91	97	96			100		
cM capacity (veh/h)	247	49	1084	26	50	403	1622			287		

Direction, Lane #	EB 1	WB 1	NE 1	NE 2	NE 3
Volume Total	40	16	552	982	511
Volume Left	35	0	61	0	0
Volume Right	0	12	0	0	20
cSH	161	139	1622	1700	1700
Volume to Capacity	0.25	0.11	0.04	0.58	0.30
Queue Length 95th (ft)	23	9	3	0	0
Control Delay (s)	34.6	34.2	1.2	0.0	0.0
Lane LOS	D	D	A		
Approach Delay (s)	34.6	34.2	0.3		
Approach LOS	D	D			

Intersection Summary				
Average Delay		1.2		
Intersection Capacity Utilization		53.1%	ICU Level of Service	A
Analysis Period (min)		15		

Movement	EBL	EBT	EBR	WBL	WBT	WBR	NEL	NET	NER	SWL	SWT	SWR
Lane Configurations												
Volume (veh/h)	0	4	0	0	4	0	2	2038	4	0	0	0
Sign Control		Stop			Stop			Free			Free	
Grade		0%			0%			0%			0%	
Peak Hour Factor	0.89	0.89	0.89	0.89	0.89	0.89	0.89	0.89	0.89	0.89	0.89	0.89
Hourly flow rate (vph)	0	4	0	0	4	0	2	2290	4	0	0	0
Pedestrians												
Lane Width (ft)												
Walking Speed (ft/s)												
Percent Blockage												
Right turn flare (veh)												
Median type								None			None	
Median storage veh)												
Upstream signal (ft)												
pX, platoon unblocked												
vC, conflicting volume	770	2299	0	2299	2297	766	0			2294		
vC1, stage 1 conf vol												
vC2, stage 2 conf vol												
vCu, unblocked vol	770	2299	0	2299	2297	766	0			2294		
tC, single (s)	7.5	6.5	6.9	7.5	6.5	6.9	4.1			4.1		
tC, 2 stage (s)												
tF (s)	3.5	4.0	3.3	3.5	4.0	3.3	2.2			2.2		
p0 queue free %	100	88	100	100	88	100	100			100		
cM capacity (veh/h)	264	38	1084	19	38	346	1622			217		

Direction, Lane #	EB 1	WB 1	NE 1	NE 2	NE 3
Volume Total	4	4	575	1145	577
Volume Left	0	0	2	0	0
Volume Right	0	0	0	0	4
cSH	38	38	1622	1700	1700
Volume to Capacity	0.12	0.12	0.00	0.67	0.34
Queue Length 95th (ft)	9	9	0	0	0
Control Delay (s)	111.5	111.1	0.0	0.0	0.0
Lane LOS	F	F	A		
Approach Delay (s)	111.5	111.1	0.0		
Approach LOS	F	F			

Intersection Summary			
Average Delay	0.4		
Intersection Capacity Utilization	49.5%	ICU Level of Service	A
Analysis Period (min)	15		

HCM Unsignalized Intersection Capacity Analysis
1: SW 97th Ave. & SW 174th St.

2/11/2015

Movement	EBL	EBT	EBR	WBL	WBT	WBR	NBL	NBT	NBR	SBL	SBT	SBR
Lane Configurations												
Sign Control		Stop			Stop			Stop			Stop	
Volume (vph)	5	124	74	61	134	1	56	9	25	3	2	7
Peak Hour Factor	0.90	0.90	0.90	0.90	0.90	0.90	0.90	0.90	0.90	0.90	0.90	0.90
Hourly flow rate (vph)	6	138	82	68	149	1	62	10	28	3	2	8

Direction, Lane #	EB 1	WB 1	NB 1	SB 1
Volume Total (vph)	226	218	100	13
Volume Left (vph)	6	68	62	3
Volume Right (vph)	82	1	28	8
Hadj (s)	-0.18	0.09	-0.01	-0.27
Departure Headway (s)	4.3	4.5	4.9	4.8
Degree Utilization, x	0.27	0.27	0.14	0.02
Capacity (veh/h)	817	763	673	668
Control Delay (s)	8.8	9.2	8.7	7.9
Approach Delay (s)	8.8	9.2	8.7	7.9
Approach LOS	A	A	A	A

Intersection Summary			
Delay	8.9		
HCM Level of Service	A		
Intersection Capacity Utilization	42.9%	ICU Level of Service	A
Analysis Period (min)	15		

Lane Group	EBL	NBT	SBT	NET
Lane Group Flow (vph)	122	303	73	2238
v/c Ratio	0.95	0.94	0.30	0.63
Control Delay	151.2	83.7	77.6	15.7
Queue Delay	0.0	0.0	0.0	0.0
Total Delay	151.2	83.7	77.6	15.7
Queue Length 50th (ft)	155	244	84	509
Queue Length 95th (ft)	#303	#444	143	543
Internal Link Dist (ft)	257	1041	665	1300
Turn Bay Length (ft)				
Base Capacity (vph)	128	324	244	3573
Starvation Cap Reductn	0	0	0	0
Spillback Cap Reductn	0	0	0	0
Storage Cap Reductn	0	0	0	0
Reduced v/c Ratio	0.95	0.94	0.30	0.63

Intersection Summary

95th percentile volume exceeds capacity, queue may be longer.
Queue shown is maximum after two cycles.

Movement	EBL	EBR	NBL	NBT	NBR	SBT	SBR	NEL2	NEL	NET	NER
Lane Configurations											
Volume (vph)	4	113	7	15	269	47	23	4	19	2085	40
Ideal Flow (vphpl)	1900	1900	1900	1900	1900	1900	1900	1900	1900	1900	1900
Total Lost time (s)	5.0			5.0		5.0				5.0	
Lane Util. Factor	1.00			1.00		1.00				0.91	
Frt	0.87			0.88		0.96				1.00	
Flt Protected	1.00			1.00		1.00				1.00	
Satd. Flow (prot)	1617			1628		1780				5068	
Flt Permitted	1.00			0.99		1.00				1.00	
Satd. Flow (perm)	1617			1620		1780				5068	
Peak-hour factor, PHF	0.96	0.96	0.96	0.96	0.96	0.96	0.96	0.96	0.96	0.96	0.96
Adj. Flow (vph)	4	118	7	16	280	49	24	4	20	2172	42
RTOR Reduction (vph)	0	0	0	102	0	0	0	0	0	1	0
Lane Group Flow (vph)	122	0	0	201	0	73	0	0	0	2237	0
Parking (#/hr)		0									
Turn Type	NA		Perm	NA		NA		Perm	Perm	NA	
Protected Phases	3			4		8				6	
Permitted Phases			4					6	6		
Actuated Green, G (s)	15.0			26.0		26.0				134.0	
Effective Green, g (s)	15.0			26.0		26.0				134.0	
Actuated g/C Ratio	0.08			0.14		0.14				0.71	
Clearance Time (s)	5.0			5.0		5.0				5.0	
Vehicle Extension (s)	3.0			3.0		3.0				3.0	
Lane Grp Cap (vph)	128			222		244				3574	
v/s Ratio Prot	c0.08					0.04					
v/s Ratio Perm				c0.12						0.44	
v/c Ratio	0.95			0.91		0.30				0.63	
Uniform Delay, d1	87.1			80.8		73.8				14.8	
Progression Factor	1.00			1.00		1.00				1.00	
Incremental Delay, d2	64.7			40.1		3.1				0.8	
Delay (s)	151.8			120.9		76.9				15.6	
Level of Service	F			F		E				B	
Approach Delay (s)	151.8			120.9		76.9				15.6	
Approach LOS	F			F		E				B	

Intersection Summary			
HCM Average Control Delay	35.0	HCM Level of Service	C
HCM Volume to Capacity ratio	0.70		
Actuated Cycle Length (s)	190.0	Sum of lost time (s)	15.0
Intersection Capacity Utilization	85.2%	ICU Level of Service	E
Analysis Period (min)	15		

c Critical Lane Group

Movement	EBL	EBR	NBL	NBT	SBT	SBR
Lane Configurations						
Volume (veh/h)	5	74	19	269	203	9
Sign Control	Stop			Free	Free	
Grade	0%			0%	0%	
Peak Hour Factor	0.92	0.92	0.92	0.92	0.92	0.92
Hourly flow rate (vph)	5	80	21	292	221	10
Pedestrians						
Lane Width (ft)						
Walking Speed (ft/s)						
Percent Blockage						
Right turn flare (veh)						
Median type				None	None	
Median storage veh)						
Upstream signal (ft)					1121	
pX, platoon unblocked						
vC, conflicting volume	559	226	230			
vC1, stage 1 conf vol						
vC2, stage 2 conf vol						
vCu, unblocked vol	559	226	230			
tC, single (s)	6.4	6.2	4.1			
tC, 2 stage (s)						
tF (s)	3.5	3.3	2.2			
p0 queue free %	99	90	98			
cM capacity (veh/h)	482	814	1337			

Direction, Lane #	EB 1	NB 1	SB 1
Volume Total	86	313	230
Volume Left	5	21	0
Volume Right	80	0	10
cSH	780	1337	1700
Volume to Capacity	0.11	0.02	0.14
Queue Length 95th (ft)	9	1	0
Control Delay (s)	10.2	0.6	0.0
Lane LOS	B	A	
Approach Delay (s)	10.2	0.6	0.0
Approach LOS	B		

Intersection Summary			
Average Delay	1.7		
Intersection Capacity Utilization	41.3%	ICU Level of Service	A
Analysis Period (min)	15		

Movement	WBL	WBR	NBT	NBR	SBL	SBT
Lane Configurations						
Volume (veh/h)	49	47	261	36	26	240
Sign Control	Stop		Free			Free
Grade	0%		0%			0%
Peak Hour Factor	0.94	0.94	0.94	0.94	0.94	0.94
Hourly flow rate (vph)	52	50	278	38	28	255
Pedestrians						
Lane Width (ft)						
Walking Speed (ft/s)						
Percent Blockage						
Right turn flare (veh)						
Median type			None			None
Median storage veh)						
Upstream signal (ft)						
pX, platoon unblocked						
vC, conflicting volume	607	297			316	
vC1, stage 1 conf vol						
vC2, stage 2 conf vol						
vCu, unblocked vol	607	297			316	
tC, single (s)	6.4	6.2			4.1	
tC, 2 stage (s)						
tF (s)	3.5	3.3			2.2	
p0 queue free %	88	93			98	
cM capacity (veh/h)	449	743			1244	

Direction, Lane #	WB 1	NB 1	SB 1
Volume Total	102	316	283
Volume Left	52	0	28
Volume Right	50	38	0
cSH	557	1700	1244
Volume to Capacity	0.18	0.19	0.02
Queue Length 95th (ft)	17	0	2
Control Delay (s)	12.9	0.0	1.0
Lane LOS	B		A
Approach Delay (s)	12.9	0.0	1.0
Approach LOS	B		

Intersection Summary			
Average Delay	2.3		
Intersection Capacity Utilization	45.6%	ICU Level of Service	A
Analysis Period (min)	15		

Movement	EBL	EBR	NBL	NBT	SBT	SBR
Lane Configurations						
Volume (veh/h)	5	46	14	312	295	4
Sign Control	Stop			Free	Free	
Grade	0%			0%	0%	
Peak Hour Factor	0.93	0.93	0.93	0.93	0.93	0.93
Hourly flow rate (vph)	5	49	15	335	317	4
Pedestrians						
Lane Width (ft)						
Walking Speed (ft/s)						
Percent Blockage						
Right turn flare (veh)						
Median type				None	None	
Median storage veh)						
Upstream signal (ft)				1230		
pX, platoon unblocked	0.90					
vC, conflicting volume	685	319	322			
vC1, stage 1 conf vol						
vC2, stage 2 conf vol						
vCu, unblocked vol	598	319	322			
tC, single (s)	6.4	6.2	4.1			
tC, 2 stage (s)						
tF (s)	3.5	3.3	2.2			
p0 queue free %	99	93	99			
cM capacity (veh/h)	415	721	1238			

Direction, Lane #	EB 1	NB 1	SB 1
Volume Total	55	351	322
Volume Left	5	15	0
Volume Right	49	0	4
cSH	673	1238	1700
Volume to Capacity	0.08	0.01	0.19
Queue Length 95th (ft)	7	1	0
Control Delay (s)	10.8	0.5	0.0
Lane LOS	B	A	
Approach Delay (s)	10.8	0.5	0.0
Approach LOS	B		

Intersection Summary			
Average Delay	1.0		
Intersection Capacity Utilization	37.8%	ICU Level of Service	A
Analysis Period (min)	15		

Movement	EBL	EBT	EBR	WBL	WBT	WBR	NBL	NBT	NBR	SBL	SBT	SBR
Lane Configurations												
Volume (veh/h)	5	4	26	7	1	12	4	329	2	4	355	7
Sign Control		Stop			Stop			Free			Free	
Grade		0%			0%			0%			0%	
Peak Hour Factor	0.87	0.87	0.87	0.87	0.87	0.87	0.87	0.87	0.87	0.87	0.87	0.87
Hourly flow rate (vph)	6	5	30	8	1	14	5	378	2	5	408	8
Pedestrians												
Lane Width (ft)												
Walking Speed (ft/s)												
Percent Blockage												
Right turn flare (veh)												
Median type								None			None	
Median storage veh)												
Upstream signal (ft)								904				
pX, platoon unblocked	0.87	0.87		0.87	0.87	0.87				0.87		
vC, conflicting volume	824	811	412	842	814	379	416			380		
vC1, stage 1 conf vol												
vC2, stage 2 conf vol												
vCu, unblocked vol	722	707	412	742	710	210	416			211		
tC, single (s)	7.1	6.5	6.2	7.1	6.5	6.2	4.1			4.1		
tC, 2 stage (s)												
tF (s)	3.5	4.0	3.3	3.5	4.0	3.3	2.2			2.2		
p0 queue free %	98	99	95	97	100	98	100			100		
cM capacity (veh/h)	289	310	640	270	309	721	1143			1181		

Direction, Lane #	EB 1	WB 1	NB 1	SB 1
Volume Total	40	23	385	421
Volume Left	6	8	5	5
Volume Right	30	14	2	8
cSH	494	436	1143	1181
Volume to Capacity	0.08	0.05	0.00	0.00
Queue Length 95th (ft)	7	4	0	0
Control Delay (s)	12.9	13.7	0.1	0.1
Lane LOS	B	B	A	A
Approach Delay (s)	12.9	13.7	0.1	0.1
Approach LOS	B	B		

Intersection Summary			
Average Delay	1.1		
Intersection Capacity Utilization	31.5%	ICU Level of Service	A
Analysis Period (min)	15		

Movement	EBL	EBT	EBR	WBL	WBT	WBR	NBL	NBT	NBR	SBL	SBT	SBR
Lane Configurations												
Volume (veh/h)	1	0	2	0	0	0	1	346	0	2	399	2
Sign Control		Stop			Stop			Free			Free	
Grade		0%			0%			0%			0%	
Peak Hour Factor	0.91	0.91	0.91	0.91	0.91	0.91	0.91	0.91	0.91	0.91	0.91	0.91
Hourly flow rate (vph)	1	0	2	0	0	0	1	380	0	2	438	2
Pedestrians												
Lane Width (ft)												
Walking Speed (ft/s)												
Percent Blockage												
Right turn flare (veh)												
Median type								None			None	
Median storage veh)												
Upstream signal (ft)								601				
pX, platoon unblocked	0.87	0.87		0.87	0.87	0.87				0.87		
vC, conflicting volume	826	826	440	829	827	380	441			380		
vC1, stage 1 conf vol												
vC2, stage 2 conf vol												
vCu, unblocked vol	725	725	440	728	726	212	441			212		
tC, single (s)	7.1	6.5	6.2	7.1	6.5	6.2	4.1			4.1		
tC, 2 stage (s)												
tF (s)	3.5	4.0	3.3	3.5	4.0	3.3	2.2			2.2		
p0 queue free %	100	100	100	100	100	100	100			100		
cM capacity (veh/h)	295	305	617	293	304	720	1119			1181		

Direction, Lane #	EB 1	WB 1	NB 1	SB 1
Volume Total	3	0	381	443
Volume Left	1	0	1	2
Volume Right	2	0	0	2
cSH	453	1700	1119	1181
Volume to Capacity	0.01	0.00	0.00	0.00
Queue Length 95th (ft)	1	0	0	0
Control Delay (s)	13.0	0.0	0.0	0.1
Lane LOS	B	A	A	A
Approach Delay (s)	13.0	0.0	0.0	0.1
Approach LOS	B	A		

Intersection Summary			
Average Delay	0.1		
Intersection Capacity Utilization	32.6%	ICU Level of Service	A
Analysis Period (min)	15		

Movement	EBL	EBT	EBR	WBL	WBT	WBR	NBL	NBT	NBR	SBL	SBT	SBR
Lane Configurations												
Volume (veh/h)	7	1	61	2	2	2	9	337	1	3	393	1
Sign Control		Stop			Stop			Free			Free	
Grade		0%			0%			0%			0%	
Peak Hour Factor	0.93	0.93	0.93	0.93	0.93	0.93	0.93	0.93	0.93	0.93	0.93	0.93
Hourly flow rate (vph)	8	1	66	2	2	2	10	362	1	3	423	1
Pedestrians												
Lane Width (ft)												
Walking Speed (ft/s)												
Percent Blockage												
Right turn flare (veh)												
Median type								None			None	
Median storage veh)												
Upstream signal (ft)								300				
pX, platoon unblocked	0.88	0.88		0.88	0.88	0.88				0.88		
vC, conflicting volume	815	812	423	878	812	363	424			363		
vC1, stage 1 conf vol												
vC2, stage 2 conf vol												
vCu, unblocked vol	718	715	423	790	715	202	424			203		
tC, single (s)	7.1	6.5	6.2	7.1	6.5	6.2	4.1			4.1		
tC, 2 stage (s)												
tF (s)	3.5	4.0	3.3	3.5	4.0	3.3	2.2			2.2		
p0 queue free %	97	100	90	99	99	100	99			100		
cM capacity (veh/h)	296	309	631	239	309	735	1136			1199		

Direction, Lane #	EB 1	WB 1	NB 1	SB 1
Volume Total	74	6	373	427
Volume Left	8	2	10	3
Volume Right	66	2	1	1
cSH	558	341	1136	1199
Volume to Capacity	0.13	0.02	0.01	0.00
Queue Length 95th (ft)	11	1	1	0
Control Delay (s)	12.4	15.7	0.3	0.1
Lane LOS	B	C	A	A
Approach Delay (s)	12.4	15.7	0.3	0.1
Approach LOS	B	C		

Intersection Summary			
Average Delay	1.3		
Intersection Capacity Utilization	34.9%	ICU Level of Service	A
Analysis Period (min)	15		

Lane Group	EBL	EBT	EBR	WBL	WBT	NBL	NBT	SBL	SBT
Lane Group Flow (vph)	38	474	174	199	565	147	406	35	491
v/c Ratio	0.08	0.66	0.29	0.47	0.38	0.41	0.49	0.10	0.61
Control Delay	14.6	33.8	14.8	21.3	24.7	26.9	33.0	22.5	42.1
Queue Delay	0.0	0.0	0.0	0.0	0.0	0.0	0.0	0.0	0.0
Total Delay	14.6	33.8	14.8	21.3	24.7	26.9	33.0	22.5	42.1
Queue Length 50th (ft)	12	234	37	70	150	71	114	16	168
Queue Length 95th (ft)	34	388	102	134	226	117	156	36	232
Internal Link Dist (ft)		1915			422		229		156
Turn Bay Length (ft)	130			95		155		130	
Base Capacity (vph)	474	723	600	423	1500	661	1240	584	1232
Starvation Cap Reductn	0	0	0	0	0	0	0	0	0
Spillback Cap Reductn	0	0	0	0	0	0	0	0	0
Storage Cap Reductn	0	0	0	0	0	0	0	0	0
Reduced v/c Ratio	0.08	0.66	0.29	0.47	0.38	0.22	0.33	0.06	0.40

Intersection Summary

Movement	EBL	EBT	EBR	WBL	WBT	WBR	NBL	NBT	NBR	SBL	SBT	SBR
Lane Configurations												
Volume (vph)	35	436	160	183	510	10	135	283	90	32	409	42
Ideal Flow (vphpl)	1900	1900	1900	1900	1900	1900	1900	1900	1900	1900	1900	1900
Total Lost time (s)	3.0	3.0	5.0	3.0	3.0		3.0	3.0		3.0	3.0	
Lane Util. Factor	1.00	1.00	1.00	1.00	0.95		1.00	0.95		1.00	0.95	
Frt	1.00	1.00	0.85	1.00	1.00		1.00	0.96		1.00	0.99	
Flt Protected	0.95	1.00	1.00	0.95	1.00		0.95	1.00		0.95	1.00	
Satd. Flow (prot)	1770	1863	1583	1770	3529		1770	3411		1770	3489	
Flt Permitted	0.41	1.00	1.00	0.39	1.00		0.35	1.00		0.51	1.00	
Satd. Flow (perm)	763	1863	1583	721	3529		649	3411		956	3489	
Peak-hour factor, PHF	0.92	0.92	0.92	0.92	0.92	0.92	0.92	0.92	0.92	0.92	0.92	0.92
Adj. Flow (vph)	38	474	174	199	554	11	147	308	98	35	445	46
RTOR Reduction (vph)	0	0	68	0	1	0	0	20	0	0	5	0
Lane Group Flow (vph)	38	474	106	199	564	0	147	386	0	35	486	0
Turn Type	pm+pt	NA	custom	pm+pt	NA		custom	NA		custom	NA	
Protected Phases	1 2	2 4		1 3	3 4		5 6	6 8		5 7	7 8	
Permitted Phases	2 4		4	3 4			8			8		
Actuated Green, G (s)	50.2	42.2	38.3	48.3	46.3		33.4	24.4		28.0	25.0	
Effective Green, g (s)	50.2	42.2	38.3	48.3	46.3		33.4	24.4		28.0	25.0	
Actuated g/C Ratio	0.44	0.37	0.33	0.42	0.40		0.29	0.21		0.24	0.22	
Clearance Time (s)			5.0									
Vehicle Extension (s)			3.0									
Lane Grp Cap (vph)	437	683	527	394	1420		343	723		307	758	
v/s Ratio Prot	0.01	c0.25		c0.04	0.16		c0.06	0.11		0.01	c0.14	
v/s Ratio Perm	0.03		0.07	0.17			0.07			0.02		
v/c Ratio	0.09	0.69	0.20	0.51	0.40		0.43	0.53		0.11	0.64	
Uniform Delay, d1	18.7	31.0	27.5	22.2	24.5		31.7	40.3		33.6	41.0	
Progression Factor	1.00	1.00	1.00	1.00	1.00		1.00	1.00		1.00	1.00	
Incremental Delay, d2	0.1	3.1	0.2	1.0	0.2		0.9	0.8		0.2	1.9	
Delay (s)	18.8	34.0	27.6	23.2	24.7		32.6	41.0		33.8	42.8	
Level of Service	B	C	C	C	C		C	D		C	D	
Approach Delay (s)		31.6			24.3			38.8			42.2	
Approach LOS		C			C			D			D	

Intersection Summary			
HCM Average Control Delay	33.2	HCM Level of Service	C
HCM Volume to Capacity ratio	0.59		
Actuated Cycle Length (s)	115.1	Sum of lost time (s)	18.0
Intersection Capacity Utilization	66.5%	ICU Level of Service	C
Analysis Period (min)	15		
c Critical Lane Group			

Movement	EBL	EBT	WBT	WBR	SBL	SBR
Lane Configurations						
Volume (veh/h)	4	582	718	9	5	1
Sign Control		Free	Free		Stop	
Grade		0%	0%		0%	
Peak Hour Factor	0.96	0.96	0.96	0.96	0.96	0.96
Hourly flow rate (vph)	4	606	748	9	5	1
Pedestrians						
Lane Width (ft)						
Walking Speed (ft/s)						
Percent Blockage						
Right turn flare (veh)						
Median type		None	None			
Median storage veh)						
Upstream signal (ft)		502				
pX, platoon unblocked					0.78	
vC, conflicting volume	757				1367	753
vC1, stage 1 conf vol						
vC2, stage 2 conf vol						
vCu, unblocked vol	757				1329	753
tC, single (s)	4.1				6.4	6.2
tC, 2 stage (s)						
tF (s)	2.2				3.5	3.3
p0 queue free %	100				96	100
cM capacity (veh/h)	854				132	410

Direction, Lane #	EB 1	EB 2	WB 1	SB 1
Volume Total	4	606	757	6
Volume Left	4	0	0	5
Volume Right	0	0	9	1
cSH	854	1700	1700	149
Volume to Capacity	0.00	0.36	0.45	0.04
Queue Length 95th (ft)	0	0	0	3
Control Delay (s)	9.2	0.0	0.0	30.2
Lane LOS	A			D
Approach Delay (s)	0.1		0.0	30.2
Approach LOS				D

Intersection Summary			
Average Delay	0.2		
Intersection Capacity Utilization	48.3%	ICU Level of Service	A
Analysis Period (min)	15		

Lane Group	EBL	EBT	WBL	WBT	NBL	NBT	SBL	SBT
Lane Group Flow (vph)	202	494	220	452	79	1641	209	2209
v/c Ratio	0.71	0.87	0.95	0.94	0.58	0.64	0.92	0.81
Control Delay	88.3	92.0	125.2	106.7	48.8	33.5	78.7	38.1
Queue Delay	0.0	0.0	0.0	0.0	0.0	0.0	0.0	0.0
Total Delay	88.3	92.0	125.2	106.7	48.8	33.5	78.7	38.1
Queue Length 50th (ft)	239	313	304	312	44	531	160	810
Queue Length 95th (ft)	340	386	#507	#435	106	583	#340	927
Internal Link Dist (ft)		364		1915		469		768
Turn Bay Length (ft)			286		160		130	
Base Capacity (vph)	313	621	233	483	193	2559	230	2732
Starvation Cap Reductn	0	0	0	0	0	0	0	0
Spillback Cap Reductn	0	0	0	0	0	0	0	0
Storage Cap Reductn	0	0	0	0	0	0	0	0
Reduced v/c Ratio	0.65	0.80	0.94	0.94	0.41	0.64	0.91	0.81

Intersection Summary

95th percentile volume exceeds capacity, queue may be longer.
Queue shown is maximum after two cycles.

Movement	EBL	EBT	EBR	WBL	WBT	WBR	NBL	NBT	NBR	SBL	SBT	SBR
Lane Configurations												
Volume (vph)	186	405	50	306	301	11	73	1202	307	192	1801	231
Ideal Flow (vphpl)	1900	1900	1900	1900	1900	1900	1900	1900	1900	1900	1900	1900
Total Lost time (s)	5.0	5.0		5.0	5.0		3.0	5.0		3.0	5.0	
Lane Util. Factor	1.00	0.95		0.91	0.91		1.00	0.91		1.00	0.91	
Frt	1.00	0.98		1.00	1.00		1.00	0.97		1.00	0.98	
Flt Protected	0.95	1.00		0.95	0.99		0.95	1.00		0.95	1.00	
Satd. Flow (prot)	1770	3481		1610	3335		1770	4930		1770	4999	
Flt Permitted	0.95	1.00		0.95	0.99		0.04	1.00		0.08	1.00	
Satd. Flow (perm)	1770	3481		1610	3335		78	4930		146	4999	
Peak-hour factor, PHF	0.92	0.92	0.92	0.92	0.92	0.92	0.92	0.92	0.92	0.92	0.92	0.92
Adj. Flow (vph)	202	440	54	333	327	12	79	1307	334	209	1958	251
RTOR Reduction (vph)	0	5	0	0	1	0	0	23	0	0	8	0
Lane Group Flow (vph)	202	489	0	220	451	0	79	1618	0	209	2201	0
Turn Type	Split	NA		Split	NA		pm+pt	NA		pm+pt	NA	
Protected Phases	4	4		8	8		5	2		1	6	
Permitted Phases							2			6		
Actuated Green, G (s)	30.2	30.2		26.8	26.8		106.1	96.1		114.8	101.8	
Effective Green, g (s)	30.2	30.2		26.8	26.8		106.1	96.1		114.8	101.8	
Actuated g/C Ratio	0.16	0.16		0.14	0.14		0.57	0.51		0.61	0.54	
Clearance Time (s)	5.0	5.0		5.0	5.0		3.0	5.0		3.0	5.0	
Vehicle Extension (s)	3.0	3.0		3.0	3.0		3.0	3.0		3.0	3.0	
Lane Grp Cap (vph)	286	563		231	478		135	2536		226	2724	
v/s Ratio Prot	0.11	c0.14		c0.14	0.14		0.03	0.33		c0.08	0.44	
v/s Ratio Perm							0.30			c0.49		
v/c Ratio	0.71	0.87		0.95	0.94		0.59	0.64		0.92	0.81	
Uniform Delay, d1	74.1	76.4		79.4	79.3		34.3	32.8		45.1	34.6	
Progression Factor	1.00	1.00		1.00	1.00		1.00	1.00		1.00	1.00	
Incremental Delay, d2	7.7	13.4		45.7	27.4		6.3	1.2		39.4	1.9	
Delay (s)	81.8	89.7		125.1	106.7		40.7	34.0		84.6	36.4	
Level of Service	F	F		F	F		D	C		F	D	
Approach Delay (s)		87.4			112.7			34.3			40.6	
Approach LOS		F			F			C			D	

Intersection Summary			
HCM Average Control Delay	53.3	HCM Level of Service	D
HCM Volume to Capacity ratio	0.91		
Actuated Cycle Length (s)	186.8	Sum of lost time (s)	13.0
Intersection Capacity Utilization	84.4%	ICU Level of Service	E
Analysis Period (min)	15		
c Critical Lane Group			

Movement	EBL	EBT	EBR	WBL	WBT	WBR	NBL	NBT	NBR	SBL	SBT	SBR
Lane Configurations												
Volume (vph)	186	405	50	306	301	11	73	1202	307	192	1801	231
Movement Number	7	4	14	3	8	18	5	2	12	1	6	16
Initial Queue, veh	0	0	0	0	0	0	0	0	0	0	0	0
Ped-Bike Adj. Factor (A_pbT)	1.00		1.00	1.00		1.00	1.00		1.00	1.00		1.00
Parking, Bus Adj. Factors	1.00	1.00	1.00	1.00	1.00	1.00	1.00	1.00	1.00	1.00	1.00	1.00
Adj. Sat. Flow Rate, veh/h/ln	1863	1863	1863	1863	1863	1863	1863	1863	1863	1863	1863	1863
Lanes	1	2	0	1	2	0	1	3	0	1	3	0
Lane Assignment												
Capacity, veh/h	271	498	61	267	538	20	137	2162	552	244	2582	328
Proportion Arriving On Green	0.15	0.15	0.15	0.15	0.15	0.15	0.03	0.54	0.54	0.06	0.56	0.56
Movement Delay, s/veh	80.0	94.2	96.2	214.1	75.0	75.1	36.5	30.1	31.7	49.0	31.4	33.6
Movement LOS	F	F	F	F	E	E	D	C	C	D	C	C
Approach Volume, veh/h		697			672			1720			2417	
Approach Delay, s/veh		90.8			143.9			30.9			33.6	
Approach LOS		F			F			C			C	

Timer:	1	2	3	4	5	6	7	8
Assigned Phase	1	2	8	4	5	6		
Case No	1.1	4.0	10.0	10.0	1.1	4.0		
Phase Duration (G+Y+Rc), s	13.97	101.00	32.00	32.42	8.65	106.32		
Change Period (Y+Rc), s	3.00	5.00	5.00	5.00	3.00	5.00		
Max. Allowable Headway (MAH), s	4.00	3.96	3.96	3.96	4.00	3.96		
Maximum Green Setting (Gmax), s	16.00	96.00	27.00	33.00	16.00	96.00		
Max. Queue Clearance Time (g_c+I1), s	10.68	41.93	29.00	25.91	5.64	61.61		
Green Extension Time (g_e), s	0.29	36.28	0.00	1.51	0.12	26.32		
Probability of Phase Call (p_c)	1.000	1.000	1.000	1.000	0.981	1.000		
Probability of Max Out (p_x)	0.390	0.583	1.000	0.371	0.001	0.720		

Left-Turn Movement Data					
Assigned Movement	1		3	7	5
Mvmt. Sat Flow, veh/h	1774.04		1774.04	1774.04	1774.04

Through Movement Data					
Assigned Movement		2	8	4	6
Mvmt. Sat Flow, veh/h		4040.41	3572.32	3255.17	4570.65

Right-Turn Movement Data					
Assigned Movement		12	18	14	16
Mvmt. Sat Flow, veh/h		1030.65	130.19	399.77	579.95

Left Lane Group Data								
Assigned Movement	1	0	3	7	5	0	0	0
Lane Assignment	L (Pr/Pm)		L	LL (Pr/Pm)				
Lanes in Group	1	0	1	1	1	0	0	0
Group Volume (v), veh/h	208.7	0.0	332.6	202.2	79.3	0.0	0.0	0.0
Group Sat. Flow (s), veh/h/ln	1774.0	0.0	1774.0	1774.0	1774.0	0.0	0.0	0.0
Queue Serve Time (g_s), s	8.7	0.0	27.0	19.5	3.6	0.0	0.0	0.0
Cycle Queue Clear Time (g_c), s	8.7	0.0	27.0	19.5	3.6	0.0	0.0	0.0

Perm LT Sat Flow Rate (s_l), veh/h/ln	304.4	0.0	1774.0	1774.0	174.6	0.0	0.0	0.0
Shared LT Sat Flow (s_sh), veh/h/ln	0.0	0.0	0.0	0.0	0.0	0.0	0.0	0.0
Perm LT Eff. Green (g_p), s	103.3	0.0	0.0	0.0	96.0	0.0	0.0	0.0
Perm LT Serve Time (g_u), s	56.1	0.0	0.0	0.0	41.7	0.0	0.0	0.0
Perm LT Que Serve Time (g_ps), s	56.1	0.0	0.0	0.0	41.7	0.0	0.0	0.0
Time to First Blk (g_f), s	0.0	0.0	0.0	0.0	0.0	0.0	0.0	0.0
Serve Time pre Blk (g_fs), s	0.0	0.0	0.0	0.0	0.0	0.0	0.0	0.0
Proportion LT Inside Lane (P_L)	1.000	0.000	1.000	1.000	1.000	0.000	0.000	0.000
Lane Group Capacity (c), veh/h	243.8	0.0	267.0	271.2	136.6	0.0	0.0	0.0
Volume-to-Capacity Ratio (X)	0.856	0.000	1.246	0.746	0.581	0.000	0.000	0.000
Available Capacity (c_a), veh/h	293.5	0.0	267.0	326.3	239.0	0.0	0.0	0.0
Upstream Filter Factor (I)	1.000	0.000	1.000	1.000	1.000	0.000	0.000	0.000
Uniform Delay (d1), s/veh	30.4	0.0	76.2	72.6	32.6	0.0	0.0	0.0
Incremental Delay (d2), s/veh	18.7	0.0	137.9	7.4	3.9	0.0	0.0	0.0
Initial Queue Delay (d3), s/veh	0.0	0.0	0.0	0.0	0.0	0.0	0.0	0.0
Control Delay (d), s/veh	49.0	0.0	214.1	80.0	36.5	0.0	0.0	0.0
First-Term Queue (Q1), veh/ln	6.0	0.0	12.4	9.0	2.0	0.0	0.0	0.0
Second-Term Queue (Q2), veh/ln	1.3	0.0	10.2	0.6	0.1	0.0	0.0	0.0
Third-Term Queue (Q3), veh/ln	0.0	0.0	0.0	0.0	0.0	0.0	0.0	0.0
Percentile bk-of-que factor (f_B%)	1.000	0.000	1.000	1.000	1.000	0.000	0.000	0.000
Percentile Back of Queue (Q%), veh/ln	7.3	0.0	22.6	9.5	2.1	0.0	0.0	0.0
Percentile Storage Ratio (RQ%)	1.42	0.00	2.01	0.70	0.34	0.00	0.00	0.00
Initial Queue (Qb), veh	0.0	0.0	0.0	0.0	0.0	0.0	0.0	0.0
Final (Residual) Queue (Qe), veh	0.0	0.0	16.4	0.0	0.0	0.0	0.0	0.0
Saturated Delay (ds), s/veh	0.0	0.0	0.0	0.0	0.0	0.0	0.0	0.0
Saturated Queue (Qs), veh	0.0	0.0	0.0	0.0	0.0	0.0	0.0	0.0
Saturated Capacity (cs), veh/h	0.0	0.0	0.0	0.0	0.0	0.0	0.0	0.0
Initial Queue Clear Time (tc), h	0.0	0.0	0.3	0.0	0.0	0.0	0.0	0.0
Middle Lane Group Data								
Assigned Movement	0	2	8	4	0	6	0	0
Lane Assignment		T	T	T		T		
Lanes in Group	0	2	1	1	0	2	0	0
Group Volume (v), veh/h	0.0	1096.0	170.2	250.9	0.0	1446.5	0.0	0.0
Group Sat. Flow (s), veh/h/ln	0.0	1695.1	1862.7	1862.7	0.0	1695.1	0.0	0.0
Queue Serve Time (g_s), s	0.0	39.8	15.3	23.7	0.0	58.1	0.0	0.0
Cycle Queue Clear Time (g_c), s	0.0	39.8	15.3	23.7	0.0	58.1	0.0	0.0
Lane Group Capacity (c), veh/h	0.0	1814.2	280.4	284.7	0.0	1914.8	0.0	0.0
Volume-to-Capacity Ratio (X)	0.000	0.604	0.607	0.881	0.000	0.755	0.000	0.000
Available Capacity (c_a), veh/h	0.0	1814.2	280.4	342.7	0.0	1914.8	0.0	0.0
Upstream Filter Factor (I)	0.000	1.000	1.000	1.000	0.000	1.000	0.000	0.000
Uniform Delay (d1), s/veh	0.0	28.6	71.2	74.4	0.0	29.6	0.0	0.0
Incremental Delay (d2), s/veh	0.0	1.5	3.7	19.8	0.0	1.8	0.0	0.0
Initial Queue Delay (d3), s/veh	0.0	0.0	0.0	0.0	0.0	0.0	0.0	0.0
Control Delay (d), s/veh	0.0	30.1	75.0	94.2	0.0	31.4	0.0	0.0
First-Term Queue (Q1), veh/ln	0.0	16.4	7.4	11.4	0.0	23.7	0.0	0.0
Second-Term Queue (Q2), veh/ln	0.0	0.4	0.3	1.6	0.0	0.5	0.0	0.0
Third-Term Queue (Q3), veh/ln	0.0	0.0	0.0	0.0	0.0	0.0	0.0	0.0
Percentile bk-of-que factor (f_B%)	0.000	1.000	1.000	1.000	0.000	1.000	0.000	0.000
Percentile Back of Queue (Q%), veh/ln	0.0	16.8	7.7	13.0	0.0	24.2	0.0	0.0
Percentile Storage Ratio (RQ%)	0.00	0.93	0.10	0.96	0.00	0.84	0.00	0.00

Initial Queue (Qb), veh	0.0	0.0	0.0	0.0	0.0	0.0	0.0	0.0
Final (Residual) Queue (Qe), veh	0.0	0.0	0.0	0.0	0.0	0.0	0.0	0.0
Saturated Delay (ds), s/veh	0.0	0.0	0.0	0.0	0.0	0.0	0.0	0.0
Saturated Queue (Qs), veh	0.0	0.0	0.0	0.0	0.0	0.0	0.0	0.0
Saturated Capacity (cs), veh/h	0.0	0.0	0.0	0.0	0.0	0.0	0.0	0.0
Initial Queue Clear Time (tc), h	0.0	0.0	0.0	0.0	0.0	0.0	0.0	0.0

Right Lane Group Data								
Assigned Movement	0	12	18	14	0	16	0	0
Lane Assignment		T+R	T+R	T+R		T+R		
Lanes in Group	0	1	1	1	0	1	0	0
Group Volume (v), veh/h	0.0	544.2	169.0	243.6	0.0	762.2	0.0	0.0
Group Sat. Flow (s), veh/h/ln	0.0	1680.9	1839.8	1792.2	0.0	1760.4	0.0	0.0
Queue Serve Time (g_s), s	0.0	39.9	15.4	23.9	0.0	59.6	0.0	0.0
Cycle Queue Clear Time (g_c), s	0.0	39.9	15.4	23.9	0.0	59.6	0.0	0.0
Prot RT Sat Flow Rate (s_R), veh/h/ln	0.0	0.0	0.0	0.0	0.0	0.0	0.0	0.0
Prot RT Eff. Green (g_R), s	0.0	0.0	0.0	0.0	0.0	0.0	0.0	0.0
Proportion RT Outside Lane (P_R)	0.000	0.613	0.071	0.223	0.000	0.329	0.000	0.000
Lane Group Capacity (c), veh/h	0.0	899.5	276.9	274.0	0.0	994.3	0.0	0.0
Volume-to-Capacity Ratio (X)	0.000	0.605	0.610	0.889	0.000	0.767	0.000	0.000
Available Capacity (c_a), veh/h	0.0	899.5	276.9	329.7	0.0	994.3	0.0	0.0
Upstream Filter Factor (I)	0.000	1.000	1.000	1.000	0.000	1.000	0.000	0.000
Uniform Delay (d1), s/veh	0.0	28.7	71.3	74.5	0.0	30.0	0.0	0.0
Incremental Delay (d2), s/veh	0.0	3.0	3.9	21.7	0.0	3.6	0.0	0.0
Initial Queue Delay (d3), s/veh	0.0	0.0	0.0	0.0	0.0	0.0	0.0	0.0
Control Delay (d), s/veh	0.0	31.7	75.1	96.2	0.0	33.6	0.0	0.0
First-Term Queue (Q1), veh/ln	0.0	16.3	7.3	11.1	0.0	25.3	0.0	0.0
Second-Term Queue (Q2), veh/ln	0.0	0.8	0.3	1.7	0.0	1.0	0.0	0.0
Third-Term Queue (Q3), veh/ln	0.0	0.0	0.0	0.0	0.0	0.0	0.0	0.0
Percentile bk-of-que factor (f_B%)	0.000	1.000	1.000	1.000	0.000	1.000	0.000	0.000
Percentile Back of Queue (Q%), veh/ln	0.0	17.1	7.6	12.7	0.0	26.3	0.0	0.0
Percentile Storage Ratio (RQ%)	0.00	0.95	0.10	0.94	0.00	0.91	0.00	0.00
Initial Queue (Qb), veh	0.0	0.0	0.0	0.0	0.0	0.0	0.0	0.0
Final (Residual) Queue (Qe), veh	0.0	0.0	0.0	0.0	0.0	0.0	0.0	0.0
Saturated Delay (ds), s/veh	0.0	0.0	0.0	0.0	0.0	0.0	0.0	0.0
Saturated Queue (Qs), veh	0.0	0.0	0.0	0.0	0.0	0.0	0.0	0.0
Saturated Capacity (cs), veh/h	0.0	0.0	0.0	0.0	0.0	0.0	0.0	0.0
Initial Queue Clear Time (tc), h	0.0	0.0	0.0	0.0	0.0	0.0	0.0	0.0

Intersection Summary	
HCM Average Control Delay	53.5
HCM Level of Service	D

Movement	EBL	EBT	EBR	WBL	WBT	WBR	NEL	NET	NER	SWL	SWT	SWR
Lane Configurations												
Volume (veh/h)	27	21	0	0	8	14	36	1689	18	0	0	0
Sign Control		Stop			Stop			Free			Free	
Grade		0%			0%			0%			0%	
Peak Hour Factor	0.93	0.93	0.93	0.93	0.93	0.93	0.93	0.93	0.93	0.93	0.93	0.93
Hourly flow rate (vph)	29	23	0	0	9	15	39	1816	19	0	0	0
Pedestrians												
Lane Width (ft)												
Walking Speed (ft/s)												
Percent Blockage												
Right turn flare (veh)												
Median type								None			None	
Median storage veh)												
Upstream signal (ft)												
pX, platoon unblocked												
vC, conflicting volume	702	1913	0	1915	1903	615	0			1835		
vC1, stage 1 conf vol												
vC2, stage 2 conf vol												
vCu, unblocked vol	702	1913	0	1915	1903	615	0			1835		
tC, single (s)	7.5	6.5	6.9	7.5	6.5	6.9	4.1			4.1		
tC, 2 stage (s)												
tF (s)	3.5	4.0	3.3	3.5	4.0	3.3	2.2			2.2		
p0 queue free %	90	66	100	100	87	97	98			100		
cM capacity (veh/h)	277	66	1084	30	66	434	1622			328		

Direction, Lane #	EB 1	WB 1	NE 1	NE 2	NE 3
Volume Total	52	24	493	908	473
Volume Left	29	0	39	0	0
Volume Right	0	15	0	0	19
cSH	115	144	1622	1700	1700
Volume to Capacity	0.45	0.16	0.02	0.53	0.28
Queue Length 95th (ft)	49	14	2	0	0
Control Delay (s)	59.7	34.8	0.8	0.0	0.0
Lane LOS	F	D	A		
Approach Delay (s)	59.7	34.8	0.2		
Approach LOS	F	D			

Intersection Summary				
Average Delay		2.2		
Intersection Capacity Utilization		49.7%	ICU Level of Service	A
Analysis Period (min)		15		

Movement	EBL	EBT	EBR	WBL	WBT	WBR	NEL	NET	NER	SWL	SWT	SWR
Lane Configurations												
Volume (veh/h)	0	24	0	0	3	0	1	1803	7	0	0	0
Sign Control		Stop			Stop			Free			Free	
Grade		0%			0%			0%			0%	
Peak Hour Factor	0.91	0.91	0.91	0.91	0.91	0.91	0.91	0.91	0.91	0.91	0.91	0.91
Hourly flow rate (vph)	0	26	0	0	3	0	1	1981	8	0	0	0
Pedestrians												
Lane Width (ft)												
Walking Speed (ft/s)												
Percent Blockage												
Right turn flare (veh)												
Median type								None			None	
Median storage veh)												
Upstream signal (ft)												
pX, platoon unblocked												
vC, conflicting volume	664	1991	0	2001	1987	664	0			1989		
vC1, stage 1 conf vol												
vC2, stage 2 conf vol												
vCu, unblocked vol	664	1991	0	2001	1987	664	0			1989		
tC, single (s)	7.5	6.5	6.9	7.5	6.5	6.9	4.1			4.1		
tC, 2 stage (s)												
tF (s)	3.5	4.0	3.3	3.5	4.0	3.3	2.2			2.2		
p0 queue free %	100	56	100	100	95	100	100			100		
cM capacity (veh/h)	331	60	1084	23	60	403	1622			286		

Direction, Lane #	EB 1	WB 1	NE 1	NE 2	NE 3
Volume Total	26	3	496	991	503
Volume Left	0	0	1	0	0
Volume Right	0	0	0	0	8
cSH	60	60	1622	1700	1700
Volume to Capacity	0.44	0.05	0.00	0.58	0.30
Queue Length 95th (ft)	42	4	0	0	0
Control Delay (s)	105.8	68.2	0.0	0.0	0.0
Lane LOS	F	F	A		
Approach Delay (s)	105.8	68.2	0.0		
Approach LOS	F	F			

Intersection Summary			
Average Delay	1.5		
Intersection Capacity Utilization	45.0%	ICU Level of Service	A
Analysis Period (min)	15		

Appendix E
Historical Traffic Data
Growth Rate Analysis

FLORIDA DEPARTMENT OF TRANSPORTATION
TRANSPORTATION STATISTICS OFFICE
2013 HISTORICAL AADT REPORT

COUNTY: 87 - MIAMI-DADE

SITE: 1114 - SR 994/QUAIL ROOST DR, 200' W US-1 ON SW 186 ST

YEAR	AADT	DIRECTION 1	DIRECTION 2	*K FACTOR	D FACTOR	T FACTOR
2013	16200 C	E 8300	W 7900	9.00	58.90	5.80
2012	20500 C	E 10500	W 10000	9.00	59.70	2.60
2011	17200 C	E 9900	W 7300	9.00	58.20	5.50
2010	18100 C	E 10000	W 8100	7.87	58.27	5.50
2009	20500 C	E 10500	W 10000	7.98	59.96	2.50
2008	16700 C	E 8400	W 8300	8.07	66.31	6.40
2007	18200 C	E 8800	W 9400	7.90	63.12	10.00
2006	18100 C	E 9100	W 9000	7.39	58.66	2.70
2005	20200 C	E 10500	W 9700	7.70	65.70	10.50
2004	23500 C	E 12500	W 11000	8.20	67.10	10.50
2003	18300 C	E 9400	W 8900	8.10	72.30	4.80
2002	18900 C	E 9100	W 9800	9.20	68.00	10.30
2001	17700 C	E 9900	W 7800	8.20	53.50	4.80
2000	18900 C	E 9200	W 9700	8.20	53.10	14.60
1999	13200 C	E 7000	W 6200	9.10	52.70	3.70
1998	16400 C	E 9400	W 7000	9.30	52.70	3.30

AADT FLAGS: C = COMPUTED; E = MANUAL ESTIMATE; F = FIRST YEAR ESTIMATE
S = SECOND YEAR ESTIMATE; T = THIRD YEAR ESTIMATE; F = FOURTH YEAR ESTIMATE
V = FIFTH YEAR ESTIMATE; 6 = SIXTH YEAR ESTIMATE; X = UNKNOWN
*K FACTOR: STARTING WITH YEAR 2011 IS STANDARDK, PRIOR YEARS ARE K30 VALUES

Traffic Trends - V3.0

SR 994/QUAIL ROOST DR -- 200' W US-1 ON SW 186 ST

FIN#	0
Location	1

County:	Miami-Dade (87)
Station #:	1114
Highway:	SR 994/QUAIL ROOST DR

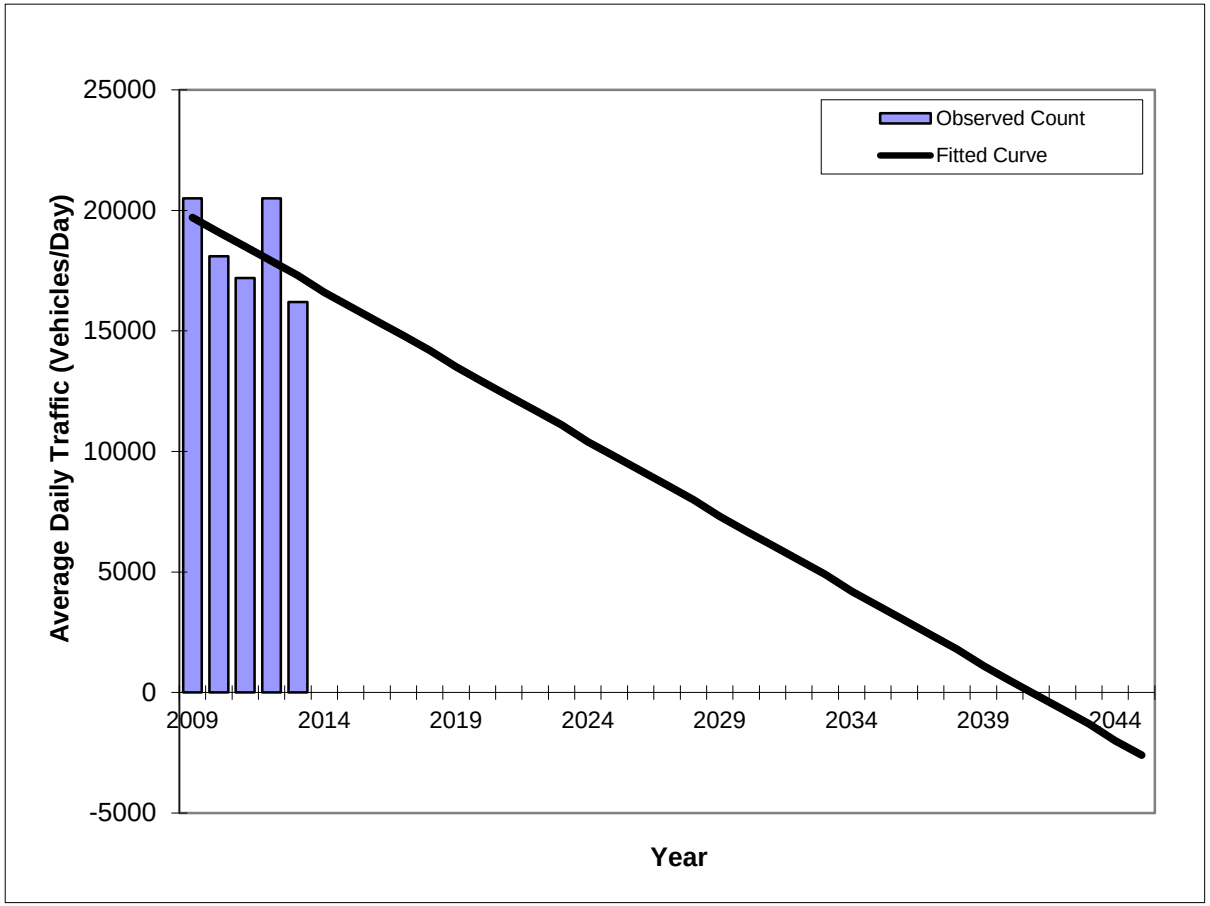

Year	Traffic (ADT/AADT) Count*	Trend**
2009	20500	19700
2010	18100	19100
2011	17200	18500
2012	20500	17900
2013	16200	17300
2025 Opening Year Trend		
2025	N/A	9800
2035 Mid-Year Trend		
2035	N/A	3600
2045 Design Year Trend		
2045	N/A	-2600
TRANPLAN Forecasts/Trends		

*Axle-Adjusted

** Annual Trend Increase:	-620
Trend R-squared:	25.39%
Trend Annual Historic Growth Rate:	-3.05%
Trend Growth Rate (2013 to Design Year):	-3.59%
Printed:	4-Feb-15

Straight Line Growth Option

Traffic Trends - V3.0

SR 994/QUAIL ROOST DR -- 200' W US-1 ON SW 186 ST

FIN#	0
Location	1

County:	Miami-Dade (87)
Station #:	1114
Highway:	SR 994/QUAIL ROOST DR

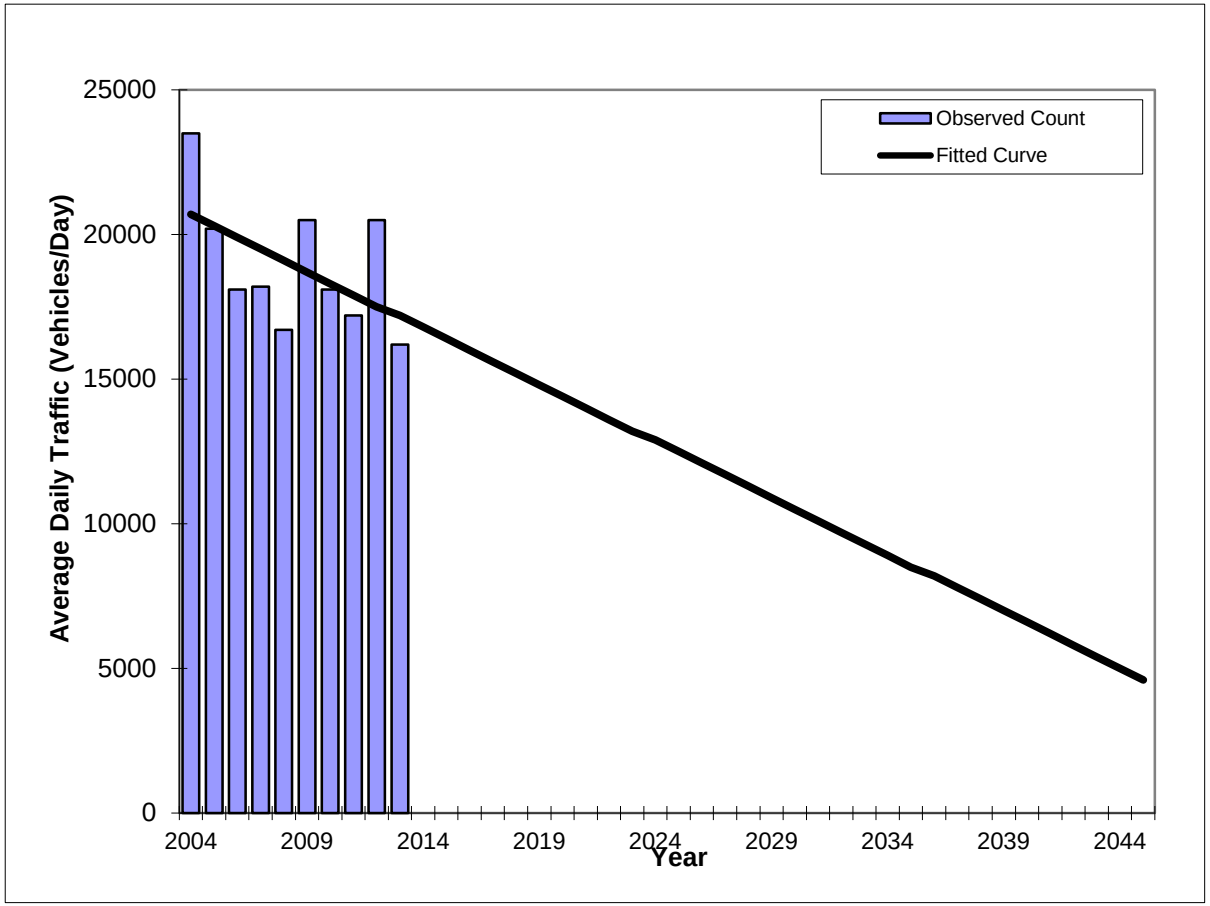

Year	Traffic (ADT/AADT) Count*	Trend**
2004	23500	20700
2005	20200	20300
2006	18100	19900
2007	18200	19500
2008	16700	19100
2009	20500	18700
2010	18100	18300
2011	17200	17900
2012	20500	17500
2013	16200	17200
2025 Opening Year Trend		
2025	N/A	12500
2035 Mid-Year Trend		
2035	N/A	8500
2045 Design Year Trend		
2045	N/A	4600
TRANPLAN Forecasts/Trends		

** Annual Trend Increase:	-392
Trend R-squared:	28.26%
Trend Annual Historic Growth Rate:	-1.88%
Trend Growth Rate (2013 to Design Year):	-2.29%
Printed:	4-Feb-15

Straight Line Growth Option

*Axle-Adjusted

FLORIDA DEPARTMENT OF TRANSPORTATION
TRANSPORTATION STATISTICS OFFICE
2013 HISTORICAL AADT REPORT

COUNTY: 87 - MIAMI-DADE

SITE: 2562 - SR5/US1 S DIXIE HWY ONE WAY SB 300' S OF SW 174 ST

YEAR	AADT	DIRECTION 1	DIRECTION 2	*K FACTOR	D FACTOR	T FACTOR
2013	28500 C	S 28500	0	9.00	99.90	5.40
2012	29000 C	S 29000	0	9.00	99.90	5.70
2011	32500 C	S 32500	0	9.00	99.90	6.10
2010	32000 C	S 32000	0	7.87	99.99	6.90
2009	28500 C	S 28500	0	7.98	99.99	6.30
2008	30500 C	S 30500	0	8.07	99.99	7.10
2007	30500 C	S 30500	0	7.90	99.99	8.00
2006	31000 C	S 31000	0	7.39	99.99	6.10
2005	30500 C	S 30500		7.70	99.90	5.50
2004	32500 C	S 32500	0	8.20	99.90	6.20
2003	29500 C	S 29500	0	8.10	99.90	4.80
2002	63500 C	S 32500	31000	9.20	99.90	3.40

AADT FLAGS: C = COMPUTED; E = MANUAL ESTIMATE; F = FIRST YEAR ESTIMATE
S = SECOND YEAR ESTIMATE; T = THIRD YEAR ESTIMATE; F = FOURTH YEAR ESTIMATE
V = FIFTH YEAR ESTIMATE; 6 = SIXTH YEAR ESTIMATE; X = UNKNOWN
*K FACTOR: STARTING WITH YEAR 2011 IS STANDARDK, PRIOR YEARS ARE K30 VALUES

Traffic Trends - V3.0

SR5/US1 S DIXIE HWY ONE WAY SB -- 300' S OF SW 174 ST

FIN#	0
Location	1

County:	Miami-Dade (87)
Station #:	2562
Highway:	SR5/US1 S DIXIE HWY ONE WAY SB

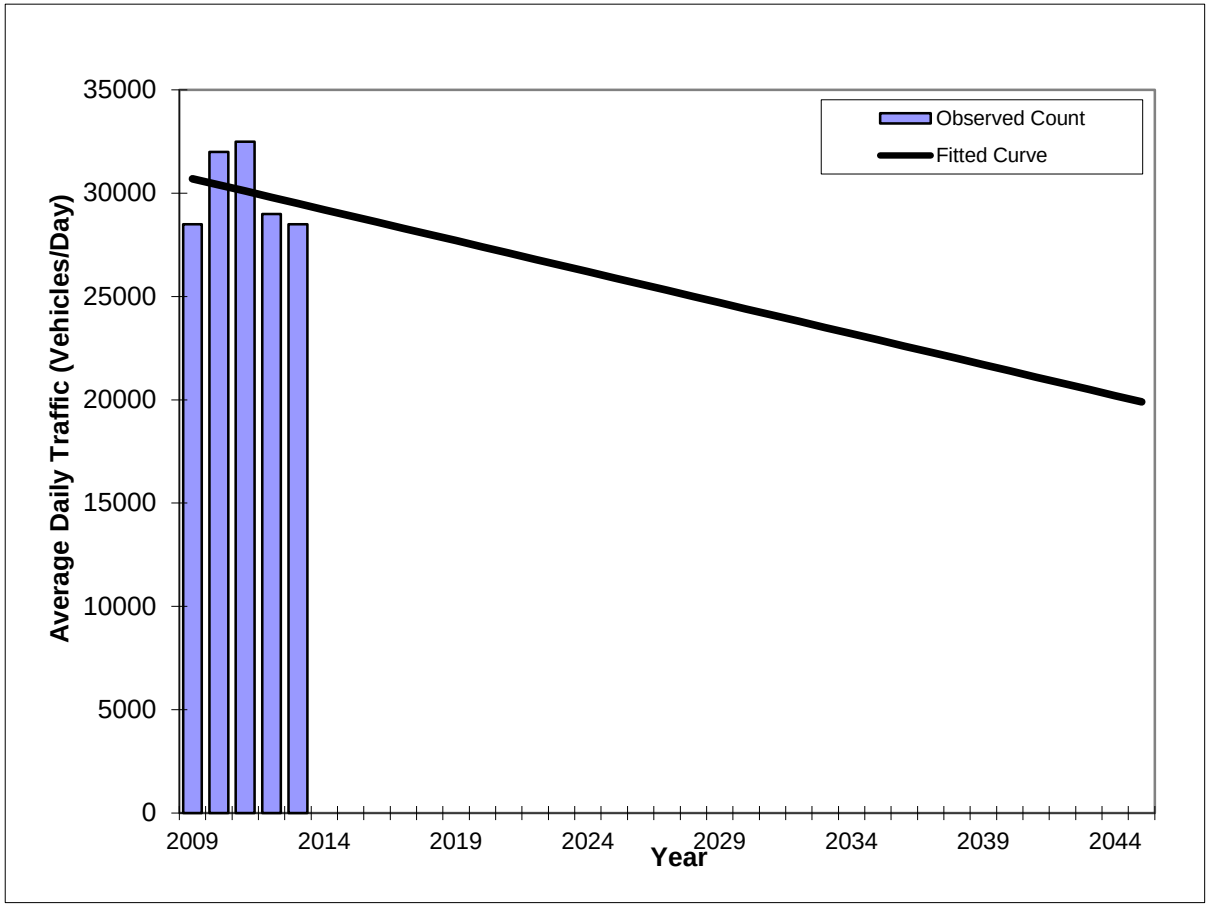

Year	Traffic (ADT/AADT) Count*	Trend**
2009	28500	30700
2010	32000	30400
2011	32500	30100
2012	29000	29800
2013	28500	29500
2025 Opening Year Trend		
2025	N/A	25900
2035 Mid-Year Trend		
2035	N/A	22900
2045 Design Year Trend		
2045	N/A	19900
TRANPLAN Forecasts/Trends		

*Axle-Adjusted

** Annual Trend Increase:	-300
Trend R-squared:	5.73%
Trend Annual Historic Growth Rate:	-0.98%
Trend Growth Rate (2013 to Design Year):	-1.02%
Printed:	4-Feb-15

Straight Line Growth Option

Traffic Trends - V3.0

SR5/US1 S DIXIE HWY ONE WAY SB -- 300' S OF SW 174 ST

FIN#	0
Location	1

County:	Miami-Dade (87)
Station #:	2562
Highway:	SR5/US1 S DIXIE HWY ONE WAY SB

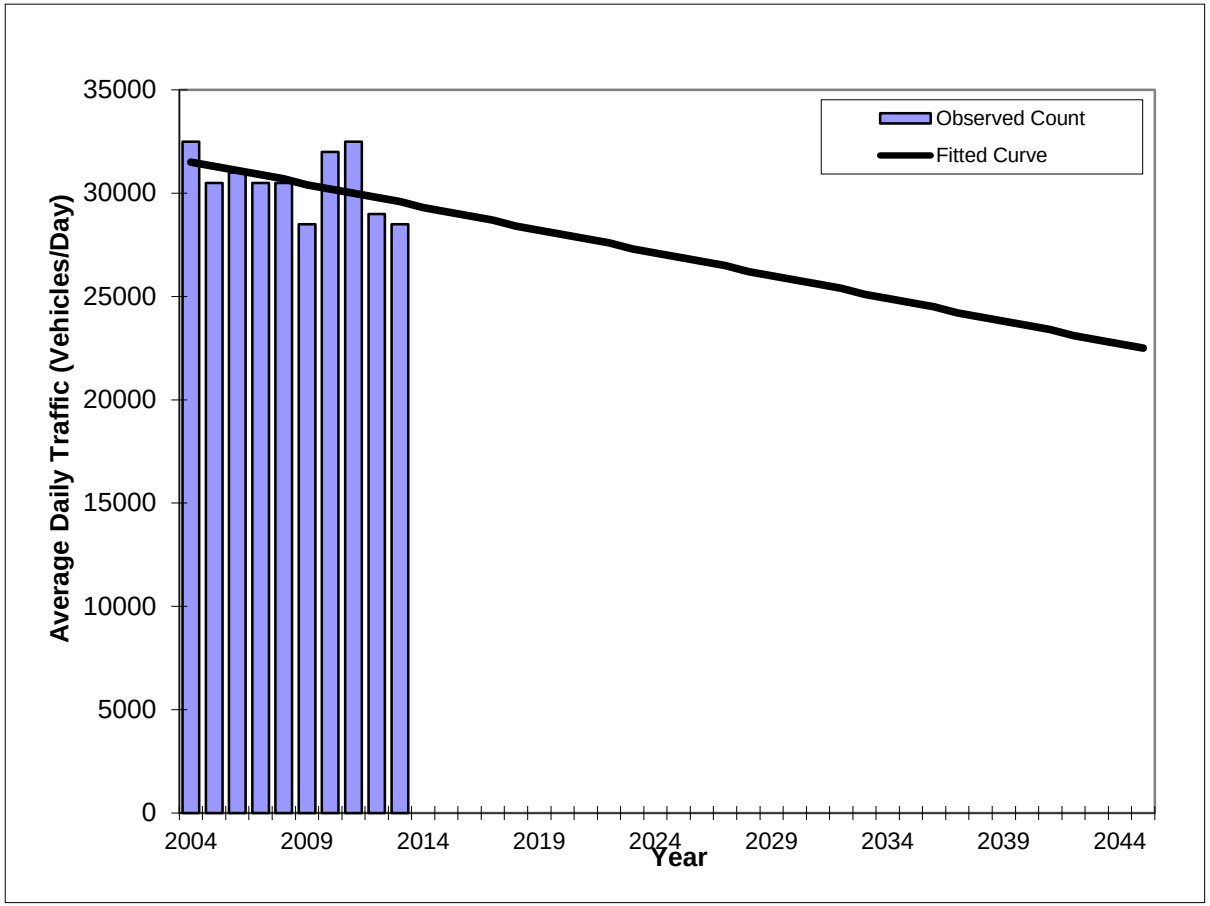

Year	Traffic (ADT/AADT) Count*	Trend**
2004	32500	31500
2005	30500	31300
2006	31000	31100
2007	30500	30900
2008	30500	30700
2009	28500	30400
2010	32000	30200
2011	32500	30000
2012	29000	29800
2013	28500	29600
2025 Opening Year Trend		
2025	N/A	26900
2035 Mid-Year Trend		
2035	N/A	24700
2045 Design Year Trend		
2045	N/A	22500
TRANPLAN Forecasts/Trends		

** Annual Trend Increase:	-221
Trend R-squared:	19.48%
Trend Annual Historic Growth Rate:	-0.67%
Trend Growth Rate (2013 to Design Year):	-0.75%
Printed:	4-Feb-15

Straight Line Growth Option

*Axle-Adjusted

FLORIDA DEPARTMENT OF TRANSPORTATION
TRANSPORTATION STATISTICS OFFICE
2013 HISTORICAL AADT REPORT

COUNTY: 87 - MIAMI-DADE

SITE: 2563 - SR5/US1 S.DIXIE HWY ONE WAY NB 300' S OF SW 174 ST

YEAR	AADT	DIRECTION 1	DIRECTION 2	*K FACTOR	D FACTOR	T FACTOR
2013	30000 C	N 30000	0	9.00	99.90	5.40
2012	30500 C	N 30500	0	9.00	99.90	5.70
2011	32000 C	N 32000	0	9.00	99.90	6.10
2010	39000 C	N 39000	0	7.87	99.99	6.90
2009	29500 C	N 29500	0	7.98	99.99	6.30
2008	30000 C	N 30000	0	8.07	99.99	7.10
2007	30500 C	N 30500	0	7.90	99.99	8.00
2006	31500 C	N 31500	0	7.39	99.99	6.10
2005	31000 C	N 31000		7.70	99.90	5.50
2004	29500 C	N 29500		8.20	99.90	6.20
2003	32000 C	N 32000		8.10	99.90	4.80

AADT FLAGS: C = COMPUTED; E = MANUAL ESTIMATE; F = FIRST YEAR ESTIMATE
S = SECOND YEAR ESTIMATE; T = THIRD YEAR ESTIMATE; F = FOURTH YEAR ESTIMATE
V = FIFTH YEAR ESTIMATE; 6 = SIXTH YEAR ESTIMATE; X = UNKNOWN
*K FACTOR: STARTING WITH YEAR 2011 IS STANDARDK, PRIOR YEARS ARE K30 VALUES

Traffic Trends - V3.0

SR5/US1 S.DIXIE HWY ONE WAY NB -- 300' S OF SW 174 ST

FIN#	0
Location	1

County:	Miami-Dade (87)
Station #:	2563
Highway:	SR5/US1 S.DIXIE HWY ONE WAY NB

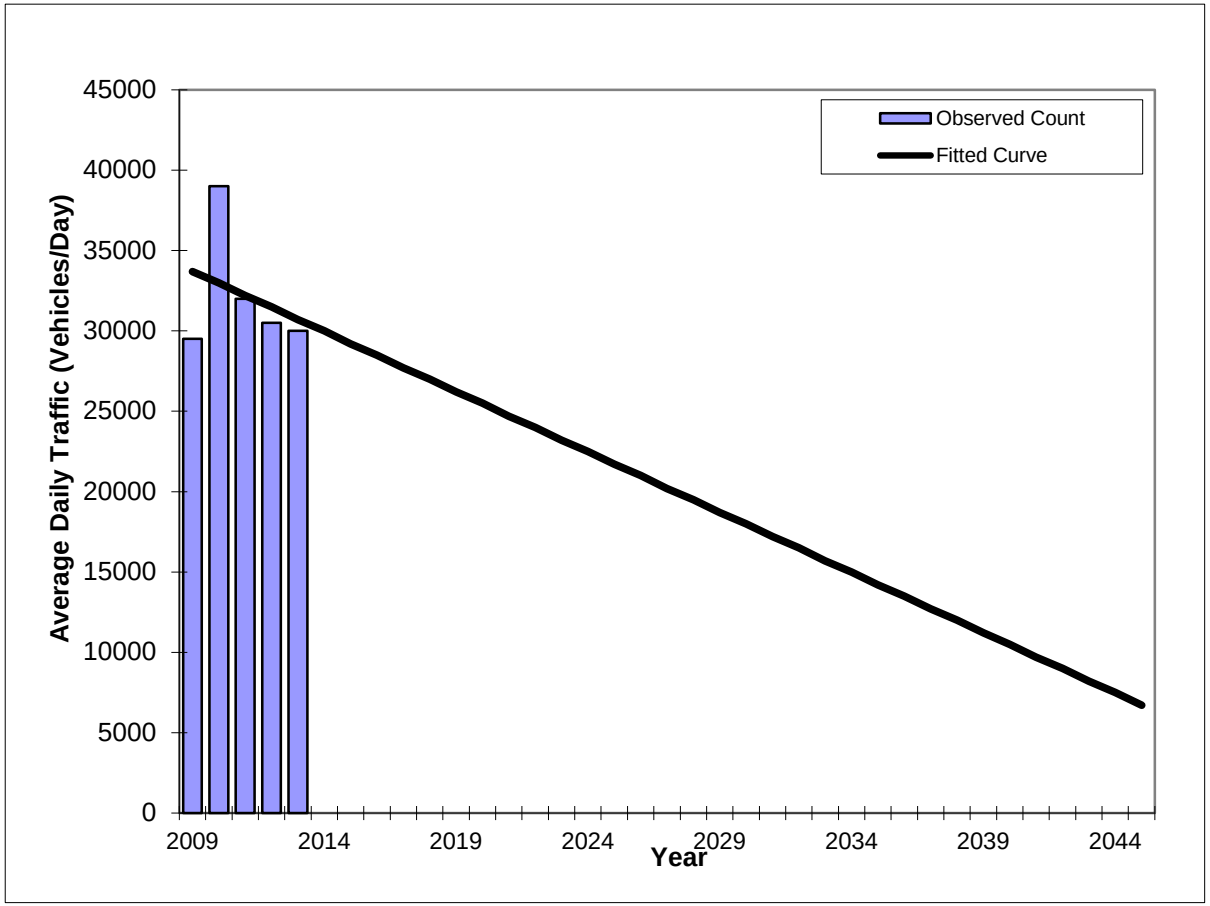

Year	Traffic (ADT/AADT) Count*	Trend**
2009	29500	33700
2010	39000	33000
2011	32000	32200
2012	30500	31500
2013	30000	30700
2025 Opening Year Trend		
2025	N/A	21700
2035 Mid-Year Trend		
2035	N/A	14200
2045 Design Year Trend		
2045	N/A	6700
TRANPLAN Forecasts/Trends		

** Annual Trend Increase:	-750
Trend R-squared:	9.18%
Trend Annual Historic Growth Rate:	-2.23%
Trend Growth Rate (2013 to Design Year):	-2.44%
Printed:	4-Feb-15

Straight Line Growth Option

*Axle-Adjusted

Traffic Trends - V3.0

SR5/US1 S.DIXIE HWY ONE WAY NB -- 300' S OF SW 174 ST

FIN#	0
Location	1

County:	Miami-Dade (87)
Station #:	2563
Highway:	SR5/US1 S.DIXIE HWY ONE WAY NB

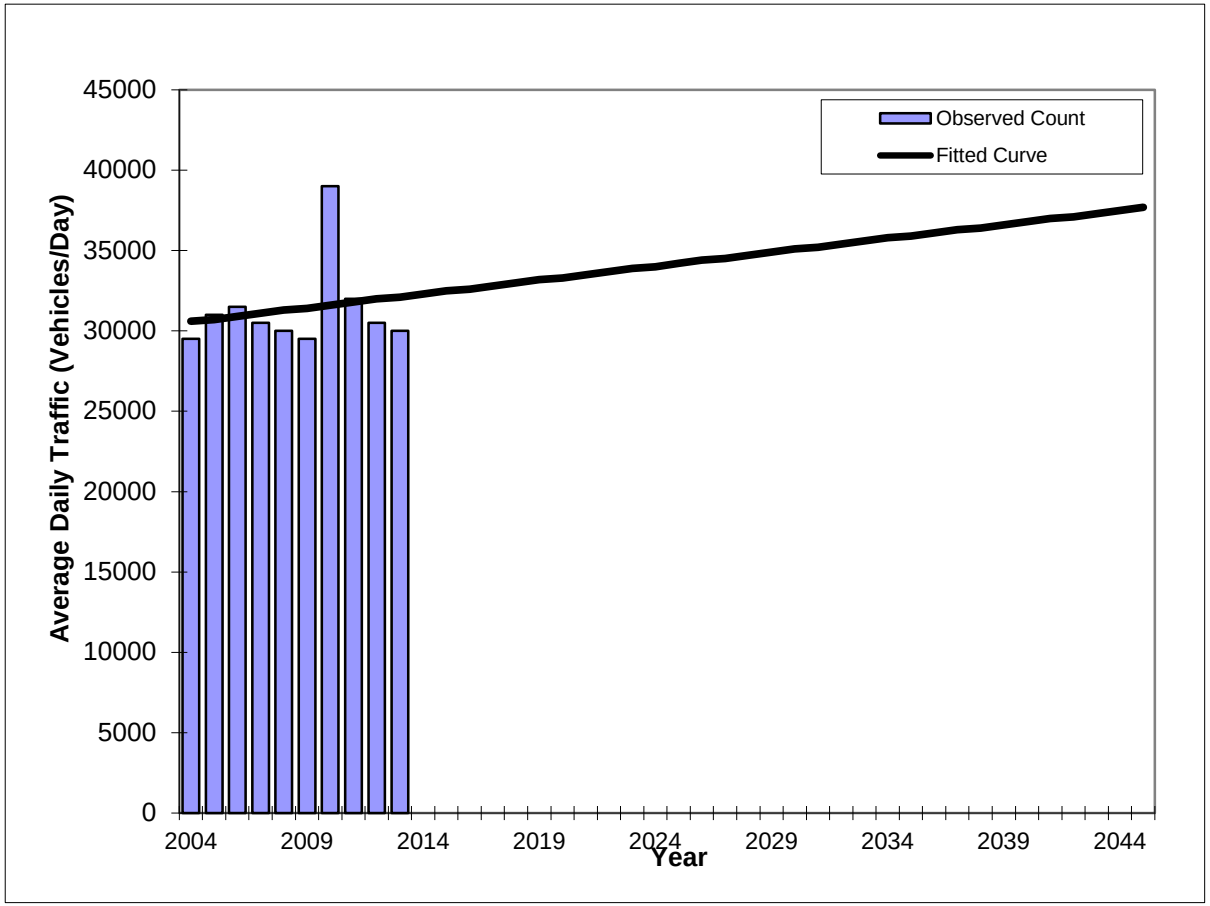

Year	Traffic (ADT/AADT) Count*	Trend**
2004	29500	30600
2005	31000	30700
2006	31500	30900
2007	30500	31100
2008	30000	31300
2009	29500	31400
2010	39000	31600
2011	32000	31800
2012	30500	32000
2013	30000	32100
2025 Opening Year Trend		
2025	N/A	34200
2035 Mid-Year Trend		
2035	N/A	35900
2045 Design Year Trend		
2045	N/A	37700
TRANPLAN Forecasts/Trends		

** Annual Trend Increase:	173
Trend R-squared:	3.47%
Trend Annual Historic Growth Rate:	0.54%
Trend Growth Rate (2013 to Design Year):	0.55%
Printed:	4-Feb-15
Straight Line Growth Option	

*Axle-Adjusted

Appendix F

2025 Background Traffic w/o Link

2035 Background Traffic w/o Link

2045 Background Traffic w/o Link

Synchro Output Sheets

HCM Unsignalized Intersection Capacity Analysis
1: SW 97th Ave. & SW 174th St.

2/11/2015

Movement	EBL	EBT	EBR	WBL	WBT	WBR	NBL	NBT	NBR	SBL	SBT	SBR
Lane Configurations												
Sign Control		Stop			Stop			Stop			Stop	
Volume (vph)	7	122	48	50	89	1	38	13	21	2	1	2
Peak Hour Factor	0.84	0.84	0.84	0.84	0.84	0.84	0.84	0.84	0.84	0.84	0.84	0.84
Hourly flow rate (vph)	9	154	61	63	112	1	48	16	26	3	1	3

Direction, Lane #	EB 1	WB 1	NB 1	SB 1
Volume Total (vph)	223	177	91	6
Volume Left (vph)	9	63	48	3
Volume Right (vph)	61	1	27	3
Hadj (s)	-0.12	0.10	-0.04	-0.13
Departure Headway (s)	4.2	4.5	4.8	4.8
Degree Utilization, x	0.26	0.22	0.12	0.01
Capacity (veh/h)	828	771	698	673
Control Delay (s)	8.7	8.7	8.4	7.8
Approach Delay (s)	8.7	8.7	8.4	7.8
Approach LOS	A	A	A	A

Intersection Summary			
Delay	8.7		
HCM Level of Service	A		
Intersection Capacity Utilization	34.5%	ICU Level of Service	A
Analysis Period (min)	15		

Lane Group	EBL	NBT	SBT	NET
Lane Group Flow (vph)	86	535	17	3916
v/c Ratio	1.30	1.27	0.05	1.20
Control Delay	269.0	182.5	51.9	123.2
Queue Delay	0.0	0.0	0.0	0.0
Total Delay	269.0	182.5	51.9	123.2
Queue Length 50th (ft)	~122	~692	15	~1931
Queue Length 95th (ft)	#226	#834	36	#1738
Internal Link Dist (ft)	257	1041	665	1300
Turn Bay Length (ft)				
Base Capacity (vph)	66	422	328	3260
Starvation Cap Reductn	0	0	0	0
Spillback Cap Reductn	0	0	0	0
Storage Cap Reductn	0	0	0	0
Reduced v/c Ratio	1.30	1.27	0.05	1.20

Intersection Summary

~ Volume exceeds capacity, queue is theoretically infinite.
Queue shown is maximum after two cycles.

95th percentile volume exceeds capacity, queue may be longer.
Queue shown is maximum after two cycles.

Movement	EBL	EBR	NBL	NBT	NBR	SBL	SBT	NEL2	NEL	NET	NER
Lane Configurations											
Volume (vph)	1	67	3	21	400	3	10	1	2	3094	6
Ideal Flow (vphpl)	1900	1900	1900	1900	1900	1900	1900	1900	1900	1900	1900
Total Lost time (s)	5.0			5.0			5.0			5.0	
Lane Util. Factor	1.00			1.00			1.00			0.91	
Frt	0.87			0.87			1.00			1.00	
Flt Protected	1.00			1.00			0.99			1.00	
Satd. Flow (prot)	1613			1625			1841			5083	
Flt Permitted	1.00			1.00			0.77			1.00	
Satd. Flow (perm)	1613			1623			1431			5083	
Peak-hour factor, PHF	0.84	0.84	0.84	0.84	0.84	0.84	0.84	0.84	0.84	0.84	0.84
Growth Factor (vph)	106%	106%	106%	106%	106%	106%	106%	106%	106%	106%	106%
Adj. Flow (vph)	1	85	4	26	505	4	13	1	3	3904	8
RTOR Reduction (vph)	0	0	0	49	0	0	0	0	0	0	0
Lane Group Flow (vph)	86	0	0	486	0	0	17	0	0	3916	0
Turn Type	NA		Perm	NA		Perm	NA	Perm	Perm	NA	
Protected Phases	3			4			8			6	
Permitted Phases			4			8		6	6		
Actuated Green, G (s)	7.0			39.0			39.0			109.0	
Effective Green, g (s)	7.0			39.0			39.0			109.0	
Actuated g/C Ratio	0.04			0.23			0.23			0.64	
Clearance Time (s)	5.0			5.0			5.0			5.0	
Vehicle Extension (s)	3.0			3.0			3.0			3.0	
Lane Grp Cap (vph)	66			372			328			3259	
v/s Ratio Prot	c0.05										
v/s Ratio Perm				c0.30			0.01			0.77	
v/c Ratio	1.30			1.31			0.05			1.20	
Uniform Delay, d1	81.5			65.5			51.1			30.5	
Progression Factor	1.00			1.00			1.00			1.00	
Incremental Delay, d2	211.8			155.8			0.3			93.9	
Delay (s)	293.3			221.3			51.4			124.4	
Level of Service	F			F			D			F	
Approach Delay (s)	293.3			221.3			51.4			124.4	
Approach LOS	F			F			D			F	

Intersection Summary			
HCM Average Control Delay	138.7	HCM Level of Service	F
HCM Volume to Capacity ratio	1.23		
Actuated Cycle Length (s)	170.0	Sum of lost time (s)	15.0
Intersection Capacity Utilization	109.6%	ICU Level of Service	H
Analysis Period (min)	15		

c Critical Lane Group

Movement	EBL	EBR	NBL	NBT	SBT	SBR
Lane Configurations						
Volume (veh/h)	8	30	32	447	78	0
Sign Control	Stop			Free	Free	
Grade	0%			0%	0%	
Peak Hour Factor	0.90	0.90	0.90	0.90	0.90	0.90
Hourly flow rate (vph)	9	35	38	526	92	0
Pedestrians						
Lane Width (ft)						
Walking Speed (ft/s)						
Percent Blockage						
Right turn flare (veh)						
Median type				None	None	
Median storage veh)						
Upstream signal (ft)					1121	
pX, platoon unblocked						
vC, conflicting volume	694	92	92			
vC1, stage 1 conf vol						
vC2, stage 2 conf vol						
vCu, unblocked vol	694	92	92			
tC, single (s)	6.4	6.2	4.1			
tC, 2 stage (s)						
tF (s)	3.5	3.3	2.2			
p0 queue free %	98	96	97			
cM capacity (veh/h)	399	965	1503			

Direction, Lane #	EB 1	NB 1	SB 1
Volume Total	45	564	92
Volume Left	9	38	0
Volume Right	35	0	0
cSH	743	1503	1700
Volume to Capacity	0.06	0.03	0.05
Queue Length 95th (ft)	5	2	0
Control Delay (s)	10.2	0.8	0.0
Lane LOS	B	A	
Approach Delay (s)	10.2	0.8	0.0
Approach LOS	B		

Intersection Summary			
Average Delay	1.3		
Intersection Capacity Utilization	43.5%	ICU Level of Service	A
Analysis Period (min)	15		

Movement	WBL	WBR	NBT	NBR	SBL	SBT
Lane Configurations						
Volume (veh/h)	37	45	469	26	11	90
Sign Control	Stop		Free			Free
Grade	0%		0%			0%
Peak Hour Factor	0.89	0.89	0.89	0.89	0.89	0.89
Hourly flow rate (vph)	44	54	559	31	13	107
Pedestrians						
Lane Width (ft)						
Walking Speed (ft/s)						
Percent Blockage						
Right turn flare (veh)						
Median type			None			None
Median storage veh)						
Upstream signal (ft)						
pX, platoon unblocked						
vC, conflicting volume	707	574			590	
vC1, stage 1 conf vol						
vC2, stage 2 conf vol						
vCu, unblocked vol	707	574			590	
tC, single (s)	6.4	6.2			4.1	
tC, 2 stage (s)						
tF (s)	3.5	3.3			2.2	
p0 queue free %	89	90			99	
cM capacity (veh/h)	396	518			986	

Direction, Lane #	WB 1	NB 1	SB 1
Volume Total	98	590	120
Volume Left	44	0	13
Volume Right	54	31	0
cSH	455	1700	986
Volume to Capacity	0.21	0.35	0.01
Queue Length 95th (ft)	20	0	1
Control Delay (s)	15.1	0.0	1.1
Lane LOS	C		A
Approach Delay (s)	15.1	0.0	1.1
Approach LOS	C		

Intersection Summary			
Average Delay	2.0		
Intersection Capacity Utilization	39.6%	ICU Level of Service	A
Analysis Period (min)	15		

Movement	EBL	EBR	NBL	NBT	SBT	SBR
Lane Configurations						
Volume (veh/h)	5	21	15	526	123	0
Sign Control	Stop			Free	Free	
Grade	0%			0%	0%	
Peak Hour Factor	0.95	0.95	0.95	0.95	0.95	0.95
Hourly flow rate (vph)	6	23	17	587	137	0
Pedestrians						
Lane Width (ft)						
Walking Speed (ft/s)						
Percent Blockage						
Right turn flare (veh)						
Median type				None	None	
Median storage veh)						
Upstream signal (ft)				1230		
pX, platoon unblocked	0.81					
vC, conflicting volume	758	137	137			
vC1, stage 1 conf vol						
vC2, stage 2 conf vol						
vCu, unblocked vol	584	137	137			
tC, single (s)	6.4	6.2	4.1			
tC, 2 stage (s)						
tF (s)	3.5	3.3	2.2			
p0 queue free %	99	97	99			
cM capacity (veh/h)	380	911	1447			

Direction, Lane #	EB 1	NB 1	SB 1
Volume Total	29	604	137
Volume Left	6	17	0
Volume Right	23	0	0
cSH	718	1447	1700
Volume to Capacity	0.04	0.01	0.08
Queue Length 95th (ft)	3	1	0
Control Delay (s)	10.2	0.3	0.0
Lane LOS	B	A	
Approach Delay (s)	10.2	0.3	0.0
Approach LOS	B		

Intersection Summary			
Average Delay	0.6		
Intersection Capacity Utilization	50.4%	ICU Level of Service	A
Analysis Period (min)	15		

Movement	EBL	EBT	EBR	WBL	WBT	WBR	NBL	NBT	NBR	SBL	SBT	SBR
Lane Configurations												
Volume (veh/h)	11	3	7	5	8	30	10	511	0	8	140	6
Sign Control		Stop			Stop			Free			Free	
Grade		0%			0%			0%			0%	
Peak Hour Factor	0.93	0.93	0.93	0.93	0.93	0.93	0.93	0.93	0.93	0.93	0.93	0.93
Hourly flow rate (vph)	13	3	8	6	9	34	11	582	0	9	160	7
Pedestrians												
Lane Width (ft)												
Walking Speed (ft/s)												
Percent Blockage												
Right turn flare (veh)												
Median type								None			None	
Median storage veh)												
Upstream signal (ft)								904				
pX, platoon unblocked	0.80	0.80		0.80	0.80	0.80				0.80		
vC, conflicting volume	825	786	163	796	790	582	166			582		
vC1, stage 1 conf vol												
vC2, stage 2 conf vol												
vCu, unblocked vol	657	608	163	620	613	353	166			353		
tC, single (s)	7.1	6.5	6.2	7.1	6.5	6.2	4.1			4.1		
tC, 2 stage (s)												
tF (s)	3.5	4.0	3.3	3.5	4.0	3.3	2.2			2.2		
p0 queue free %	95	99	99	98	97	94	99			99		
cM capacity (veh/h)	274	322	882	311	321	552	1412			965		

Direction, Lane #	EB 1	WB 1	NB 1	SB 1
Volume Total	24	49	594	176
Volume Left	13	6	11	9
Volume Right	8	34	0	7
cSH	366	451	1412	965
Volume to Capacity	0.07	0.11	0.01	0.01
Queue Length 95th (ft)	5	9	1	1
Control Delay (s)	15.5	14.0	0.2	0.5
Lane LOS	C	B	A	A
Approach Delay (s)	15.5	14.0	0.2	0.5
Approach LOS	C	B		

Intersection Summary			
Average Delay	1.5		
Intersection Capacity Utilization	42.5%	ICU Level of Service	A
Analysis Period (min)	15		

Movement	EBL	EBT	EBR	WBL	WBT	WBR	NBL	NBT	NBR	SBL	SBT	SBR
Lane Configurations												
Volume (veh/h)	5	1	2	1	4	3	2	519	2	1	142	5
Sign Control		Stop			Stop			Free			Free	
Grade		0%			0%			0%			0%	
Peak Hour Factor	0.91	0.91	0.91	0.91	0.91	0.91	0.91	0.91	0.91	0.91	0.91	0.91
Hourly flow rate (vph)	6	1	2	1	5	3	2	605	2	1	165	6
Pedestrians												
Lane Width (ft)												
Walking Speed (ft/s)												
Percent Blockage												
Right turn flare (veh)												
Median type								None			None	
Median storage veh)												
Upstream signal (ft)								601				
pX, platoon unblocked	0.80	0.80		0.80	0.80	0.80				0.80		
vC, conflicting volume	787	782	168	784	784	606	171			607		
vC1, stage 1 conf vol												
vC2, stage 2 conf vol												
vCu, unblocked vol	610	604	168	607	607	384	171			386		
tC, single (s)	7.1	6.5	6.2	7.1	6.5	6.2	4.1			4.1		
tC, 2 stage (s)												
tF (s)	3.5	4.0	3.3	3.5	4.0	3.3	2.2			2.2		
p0 queue free %	98	100	100	100	99	99	100			100		
cM capacity (veh/h)	319	329	876	325	329	532	1406			940		

Direction, Lane #	EB 1	WB 1	NB 1	SB 1
Volume Total	9	9	609	172
Volume Left	6	1	2	1
Volume Right	2	3	2	6
cSH	381	383	1406	940
Volume to Capacity	0.02	0.02	0.00	0.00
Queue Length 95th (ft)	2	2	0	0
Control Delay (s)	14.7	14.6	0.0	0.1
Lane LOS	B	B	A	A
Approach Delay (s)	14.7	14.6	0.0	0.1
Approach LOS	B	B		

Intersection Summary			
Average Delay	0.4		
Intersection Capacity Utilization	40.5%	ICU Level of Service	A
Analysis Period (min)	15		

Movement	EBL	EBT	EBR	WBL	WBT	WBR	NBL	NBT	NBR	SBL	SBT	SBR
Lane Configurations												
Volume (veh/h)	2	3	29	0	1	3	15	504	3	3	140	6
Sign Control		Stop			Stop			Free			Free	
Grade		0%			0%			0%			0%	
Peak Hour Factor	0.94	0.94	0.94	0.94	0.94	0.94	0.94	0.94	0.94	0.94	0.94	0.94
Hourly flow rate (vph)	2	3	33	0	1	3	17	568	3	3	158	7
Pedestrians												
Lane Width (ft)												
Walking Speed (ft/s)												
Percent Blockage												
Right turn flare (veh)												
Median type								None			None	
Median storage veh)												
Upstream signal (ft)								300				
pX, platoon unblocked	0.81	0.81		0.81	0.81	0.81				0.81		
vC, conflicting volume	776	774	161	806	775	570	165			572		
vC1, stage 1 conf vol												
vC2, stage 2 conf vol												
vCu, unblocked vol	606	603	161	643	605	352	165			354		
tC, single (s)	7.1	6.5	6.2	7.1	6.5	6.2	4.1			4.1		
tC, 2 stage (s)												
tF (s)	3.5	4.0	3.3	3.5	4.0	3.3	2.2			2.2		
p0 queue free %	99	99	96	100	100	99	99			100		
cM capacity (veh/h)	325	329	884	295	328	560	1414			976		

Direction, Lane #	EB 1	WB 1	NB 1	SB 1
Volume Total	38	5	589	168
Volume Left	2	0	17	3
Volume Right	33	3	3	7
cSH	707	476	1414	976
Volume to Capacity	0.05	0.01	0.01	0.00
Queue Length 95th (ft)	4	1	1	0
Control Delay (s)	10.4	12.6	0.4	0.2
Lane LOS	B	B	A	A
Approach Delay (s)	10.4	12.6	0.4	0.2
Approach LOS	B	B		

Intersection Summary			
Average Delay	0.9		
Intersection Capacity Utilization	47.1%	ICU Level of Service	A
Analysis Period (min)	15		

Lane Group	EBL	EBT	EBR	WBL	WBT	NBL	NBT	SBL	SBT
Lane Group Flow (vph)	48	424	112	73	577	220	572	30	147
v/c Ratio	0.11	0.72	0.23	0.18	0.49	0.39	0.66	0.07	0.19
Control Delay	16.1	37.2	7.6	16.8	28.1	21.5	38.0	18.6	33.5
Queue Delay	0.0	0.0	0.0	0.0	0.0	0.0	0.0	0.0	0.0
Total Delay	16.1	37.2	7.6	16.8	28.1	21.5	38.0	18.6	33.5
Queue Length 50th (ft)	18	226	0	27	167	92	165	11	42
Queue Length 95th (ft)	39	331	44	54	225	159	235	31	73
Internal Link Dist (ft)		1915			422		229		156
Turn Bay Length (ft)	130			95		155		130	
Base Capacity (vph)	472	758	618	406	1489	560	1073	444	984
Starvation Cap Reductn	0	0	0	0	0	0	0	0	0
Spillback Cap Reductn	0	0	0	0	0	0	0	0	0
Storage Cap Reductn	0	0	0	0	0	0	0	0	0
Reduced v/c Ratio	0.10	0.56	0.18	0.18	0.39	0.39	0.53	0.07	0.15

Intersection Summary

Movement	EBL	EBT	EBR	WBL	WBT	WBR	NBL	NBT	NBR	SBL	SBT	SBR
Lane Configurations												
Volume (vph)	43	380	100	65	466	51	197	440	73	27	130	2
Ideal Flow (vphpl)	1900	1900	1900	1900	1900	1900	1900	1900	1900	1900	1900	1900
Total Lost time (s)	3.0	3.0	5.0	3.0	3.0		3.0	3.0		3.0	3.0	
Lane Util. Factor	1.00	1.00	1.00	1.00	0.95		1.00	0.95		1.00	0.95	
Frt	1.00	1.00	0.85	1.00	0.99		1.00	0.98		1.00	1.00	
Flt Protected	0.95	1.00	1.00	0.95	1.00		0.95	1.00		0.95	1.00	
Satd. Flow (prot)	1770	1863	1583	1770	3487		1770	3464		1770	3532	
Flt Permitted	0.36	1.00	1.00	0.41	1.00		0.66	1.00		0.44	1.00	
Satd. Flow (perm)	673	1863	1583	761	3487		1227	3464		814	3532	
Peak-hour factor, PHF	0.95	0.95	0.95	0.95	0.95	0.95	0.95	0.95	0.95	0.95	0.95	0.95
Growth Factor (vph)	106%	106%	106%	106%	106%	106%	106%	106%	106%	106%	106%	106%
Adj. Flow (vph)	48	424	112	73	520	57	220	491	81	30	145	2
RTOR Reduction (vph)	0	0	84	0	8	0	0	11	0	0	1	0
Lane Group Flow (vph)	48	424	28	73	569	0	220	561	0	30	146	0
Turn Type	custom	NA	custom	custom	NA		custom	NA		custom	NA	
Protected Phases	1 2	2 4		1 3	3 4		5 6	6 8		5 7	7 8	
Permitted Phases	4		4	4			8			8		
Actuated Green, G (s)	37.6	29.3	25.2	34.2	31.9		34.8	20.6		29.1	20.9	
Effective Green, g (s)	37.6	29.3	25.2	34.2	31.9		34.8	20.6		29.1	20.9	
Actuated g/C Ratio	0.37	0.29	0.25	0.34	0.32		0.35	0.20		0.29	0.21	
Clearance Time (s)			5.0									
Vehicle Extension (s)			3.0									
Lane Grp Cap (vph)	386	542	396	349	1105		529	709		366	733	
v/s Ratio Prot	0.02	c0.23		c0.02	c0.16		c0.08	c0.16		0.01	c0.04	
v/s Ratio Perm	0.03		0.02	0.05			0.06			0.01		
v/c Ratio	0.12	0.78	0.07	0.21	0.52		0.42	0.79		0.08	0.20	
Uniform Delay, d1	20.4	32.8	28.8	23.0	28.1		24.6	38.0		25.9	33.0	
Progression Factor	1.00	1.00	1.00	1.00	1.00		1.00	1.00		1.00	1.00	
Incremental Delay, d2	0.1	7.2	0.1	0.3	0.4		0.5	6.0		0.1	0.1	
Delay (s)	20.6	40.0	28.9	23.3	28.5		25.2	44.0		26.0	33.1	
Level of Service	C	D	C	C	C		C	D		C	C	
Approach Delay (s)		36.3			27.9			38.8			31.9	
Approach LOS		D			C			D			C	

Intersection Summary			
HCM Average Control Delay	34.4	HCM Level of Service	C
HCM Volume to Capacity ratio	0.63		
Actuated Cycle Length (s)	100.7	Sum of lost time (s)	24.0
Intersection Capacity Utilization	58.2%	ICU Level of Service	B
Analysis Period (min)	15		

c Critical Lane Group

Movement	EBL	EBT	WBT	WBR	SBL	SBR
Lane Configurations						
Volume (veh/h)	5	494	619	27	5	4
Sign Control		Free	Free		Stop	
Grade		0%	0%		0%	
Peak Hour Factor	0.88	0.88	0.88	0.88	0.88	0.88
Hourly flow rate (vph)	6	595	746	33	6	5
Pedestrians						
Lane Width (ft)						
Walking Speed (ft/s)						
Percent Blockage						
Right turn flare (veh)						
Median type		None	None			
Median storage veh)						
Upstream signal (ft)		502				
pX, platoon unblocked					0.79	
vC, conflicting volume	778				1369	762
vC1, stage 1 conf vol						
vC2, stage 2 conf vol						
vCu, unblocked vol	778				1333	762
tC, single (s)	4.1				6.4	6.2
tC, 2 stage (s)						
tF (s)	2.2				3.5	3.3
p0 queue free %	99				95	99
cM capacity (veh/h)	839				133	405

Direction, Lane #	EB 1	EB 2	WB 1	SB 1
Volume Total	6	595	778	11
Volume Left	6	0	0	6
Volume Right	0	0	33	5
cSH	839	1700	1700	189
Volume to Capacity	0.01	0.35	0.46	0.06
Queue Length 95th (ft)	1	0	0	5
Control Delay (s)	9.3	0.0	0.0	25.2
Lane LOS	A			D
Approach Delay (s)	0.1		0.0	25.2
Approach LOS				D

Intersection Summary			
Average Delay	0.2		
Intersection Capacity Utilization	46.3%	ICU Level of Service	A
Analysis Period (min)	15		

Lane Group	EBL	EBT	WBL	WBT	NBL	NBT	SBL	SBT
Lane Group Flow (vph)	443	551	174	597	64	2154	127	1627
v/c Ratio	1.01	0.63	0.63	1.03	0.50	0.99	0.99	0.75
Control Delay	108.2	60.9	77.0	113.2	36.4	64.4	113.9	42.9
Queue Delay	0.0	0.0	0.0	0.0	0.0	0.0	0.0	0.0
Total Delay	108.2	60.9	77.0	113.2	36.4	64.4	113.9	42.9
Queue Length 50th (ft)	~517	291	201	~390	36	865	92	553
Queue Length 95th (ft)	#663	330	276	#467	60	831	#212	550
Internal Link Dist (ft)		364		1915		469		768
Turn Bay Length (ft)			286		160		130	
Base Capacity (vph)	437	874	275	577	132	2178	128	2172
Starvation Cap Reductn	0	0	0	0	0	0	0	0
Spillback Cap Reductn	0	0	0	0	0	0	0	0
Storage Cap Reductn	0	0	0	0	0	0	0	0
Reduced v/c Ratio	1.01	0.63	0.63	1.03	0.48	0.99	0.99	0.75

Intersection Summary

~ Volume exceeds capacity, queue is theoretically infinite.
Queue shown is maximum after two cycles.

95th percentile volume exceeds capacity, queue may be longer.
Queue shown is maximum after two cycles.

Movement	EBL	EBT	EBR	WBL	WBT	WBR	NBL	NBT	NBR	SBL	SBT	SBR
Lane Configurations												
Volume (vph)	351	433	4	153	452	6	51	1668	39	101	1168	121
Ideal Flow (vphpl)	1900	1900	1900	1900	1900	1900	1900	1900	1900	1900	1900	1900
Total Lost time (s)	5.0	5.0		5.0	5.0		3.0	5.0		3.0	5.0	
Lane Util. Factor	1.00	0.95		0.91	0.91		1.00	0.91		1.00	0.91	
Frt	1.00	1.00		1.00	1.00		1.00	1.00		1.00	0.99	
Flt Protected	0.95	1.00		0.95	1.00		0.95	1.00		0.95	1.00	
Satd. Flow (prot)	1770	3534		1610	3378		1770	5068		1770	5014	
Flt Permitted	0.95	1.00		0.95	1.00		0.06	1.00		0.05	1.00	
Satd. Flow (perm)	1770	3534		1610	3378		111	5068		102	5014	
Peak-hour factor, PHF	0.84	0.84	0.84	0.84	0.84	0.84	0.84	0.84	0.84	0.84	0.84	0.84
Growth Factor (vph)	106%	106%	106%	106%	106%	106%	106%	106%	106%	106%	106%	106%
Adj. Flow (vph)	443	546	5	193	570	8	64	2105	49	127	1474	153
RTOR Reduction (vph)	0	0	0	0	1	0	0	1	0	0	7	0
Lane Group Flow (vph)	443	551	0	174	596	0	64	2153	0	127	1620	0
Turn Type	Split	NA		Split	NA		pm+pt	NA		pm+pt	NA	
Protected Phases	4	4		8	8		5	2		1	6	
Permitted Phases							2			6		
Actuated Green, G (s)	42.0	42.0		29.0	29.0		80.6	73.0		81.4	73.4	
Effective Green, g (s)	42.0	42.0		29.0	29.0		80.6	73.0		81.4	73.4	
Actuated g/C Ratio	0.25	0.25		0.17	0.17		0.47	0.43		0.48	0.43	
Clearance Time (s)	5.0	5.0		5.0	5.0		3.0	5.0		3.0	5.0	
Vehicle Extension (s)	3.0	3.0		3.0	3.0		3.0	3.0		3.0	3.0	
Lane Grp Cap (vph)	437	873		275	576		127	2176		127	2165	
v/s Ratio Prot	c0.25	0.16		0.11	c0.18		0.02	0.42		c0.05	0.32	
v/s Ratio Perm							0.22			c0.43		
v/c Ratio	1.01	0.63		0.63	1.04		0.50	0.99		1.00	0.75	
Uniform Delay, d1	64.0	57.1		65.5	70.5		31.4	48.1		48.3	40.5	
Progression Factor	1.00	1.00		1.00	1.00		1.00	1.00		1.00	1.00	
Incremental Delay, d2	46.5	1.5		4.7	46.8		3.1	16.9		79.9	1.5	
Delay (s)	110.5	58.6		70.2	117.3		34.5	65.1		128.2	42.0	
Level of Service	F	E		E	F		C	E		F	D	
Approach Delay (s)		81.7			106.7			64.2			48.2	
Approach LOS		F			F			E			D	

Intersection Summary			
HCM Average Control Delay	68.1	HCM Level of Service	E
HCM Volume to Capacity ratio	0.98		
Actuated Cycle Length (s)	170.0	Sum of lost time (s)	13.0
Intersection Capacity Utilization	90.7%	ICU Level of Service	E
Analysis Period (min)	15		

c Critical Lane Group

Movement	EBL	EBT	EBR	WBL	WBT	WBR	NBL	NBT	NBR	SBL	SBT	SBR
Lane Configurations												
Volume (vph)	351	433	4	153	452	6	51	1668	39	101	1168	121
Movement Number	7	4	14	3	8	18	5	2	12	1	6	16
Initial Queue, veh	0	0	0	0	0	0	0	0	0	0	0	0
Ped-Bike Adj. Factor (A_pbT)	1.00		1.00	1.00		1.00	1.00		1.00	1.00		1.00
Parking, Bus Adj. Factors	1.00	1.00	1.00	1.00	1.00	1.00	1.00	1.00	1.00	1.00	1.00	1.00
Adj. Sat. Flow Rate, veh/h/ln	1863	1863	1863	1863	1863	1863	1863	1863	1863	1863	1863	1863
Lanes	1	2	0	1	2	0	1	3	0	1	3	0
Lane Assignment												
Capacity, veh/h	438	911	8	286	591	8	171	2233	52	143	2130	221
Proportion Arriving On Green	0.25	0.25	0.25	0.16	0.16	0.16	0.03	0.44	0.44	0.05	0.45	0.45
Movement Delay, s/veh	92.7	56.6	56.6	69.4	96.2	96.4	30.5	51.6	57.5	71.9	36.3	37.2
Movement LOS	F	E	E	E	F	F	C	D	E	E	D	D
Approach Volume, veh/h		938			727			2093			1655	
Approach Delay, s/veh		72.7			89.6			53.0			39.2	
Approach LOS		E			F			D			D	

Timer:	1	2	3	4	5	6	7	8
Assigned Phase	1	2	8	4	5	6		
Case No	1.1	4.0	10.0	10.0	1.1	4.0		
Phase Duration (G+Y+Rc), s	10.88	78.00	31.94	46.29	7.88	81.00		
Change Period (Y+Rc), s	3.00	5.00	5.00	5.00	3.00	5.00		
Max. Allowable Headway (MAH), s	4.00	3.92	3.93	3.95	4.00	3.92		
Maximum Green Setting (Gmax), s	8.00	73.00	29.00	42.00	8.00	73.00		
Max. Queue Clearance Time (g_c+I1), s	7.91	61.88	26.11	40.77	5.16	40.49		
Green Extension Time (g_e), s	0.00	9.63	0.83	0.52	0.03	22.95		
Probability of Phase Call (p_c)	0.996	1.000	1.000	1.000	0.940	1.000		
Probability of Max Out (p_x)	1.000	0.895	1.000	1.000	1.000	0.643		

Left-Turn Movement Data					
Assigned Movement	1		3	7	5
Mvmt. Sat Flow, veh/h	1774.04		1774.04	1774.04	1774.04

Through Movement Data					
Assigned Movement		2	8	4	6
Mvmt. Sat Flow, veh/h		5112.47	3668.23	3685.45	4682.32

Right-Turn Movement Data					
Assigned Movement		12	18	14	16
Mvmt. Sat Flow, veh/h		119.40	48.67	34.03	485.03

Left Lane Group Data								
Assigned Movement	1	0	3	7	5	0	0	0
Lane Assignment	L (Pr/Pm)		L	LL (Pr/Pm)				
Lanes in Group	1	0	1	1	1	0	0	0
Group Volume (v), veh/h	120.2	0.0	182.1	417.9	60.7	0.0	0.0	0.0
Group Sat. Flow (s), veh/h/ln	1774.0	0.0	1774.0	1774.0	1774.0	0.0	0.0	0.0
Queue Serve Time (g_s), s	5.9	0.0	16.0	38.8	3.2	0.0	0.0	0.0
Cycle Queue Clear Time (g_c), s	5.9	0.0	16.0	38.8	3.2	0.0	0.0	0.0

Perm LT Sat Flow Rate (s_l), veh/h/ln	207.8	0.0	1774.0	1774.0	337.1	0.0	0.0	0.0
Shared LT Sat Flow (s_sh), veh/h/ln	0.0	0.0	0.0	0.0	0.0	0.0	0.0	0.0
Perm LT Eff. Green (g_p), s	78.0	0.0	0.0	0.0	73.0	0.0	0.0	0.0
Perm LT Serve Time (g_u), s	13.1	0.0	0.0	0.0	37.5	0.0	0.0	0.0
Perm LT Que Serve Time (g_ps), s	13.1	0.0	0.0	0.0	7.8	0.0	0.0	0.0
Time to First Blk (g_f), s	0.0	0.0	0.0	0.0	0.0	0.0	0.0	0.0
Serve Time pre Blk (g_fs), s	0.0	0.0	0.0	0.0	0.0	0.0	0.0	0.0
Proportion LT Inside Lane (P_L)	1.000	0.000	1.000	1.000	1.000	0.000	0.000	0.000
Lane Group Capacity (c), veh/h	143.0	0.0	286.0	438.3	170.5	0.0	0.0	0.0
Volume-to-Capacity Ratio (X)	0.841	0.000	0.637	0.953	0.356	0.000	0.000	0.000
Available Capacity (c_a), veh/h	144.3	0.0	307.9	445.9	203.7	0.0	0.0	0.0
Upstream Filter Factor (I)	1.000	0.000	1.000	1.000	1.000	0.000	0.000	0.000
Uniform Delay (d1), s/veh	38.5	0.0	65.5	62.0	29.3	0.0	0.0	0.0
Incremental Delay (d2), s/veh	33.4	0.0	3.9	30.7	1.3	0.0	0.0	0.0
Initial Queue Delay (d3), s/veh	0.0	0.0	0.0	0.0	0.0	0.0	0.0	0.0
Control Delay (d), s/veh	71.9	0.0	69.4	92.7	30.5	0.0	0.0	0.0
First-Term Queue (Q1), veh/ln	2.5	0.0	7.3	17.5	1.4	0.0	0.0	0.0
Second-Term Queue (Q2), veh/ln	1.3	0.0	0.3	3.7	0.1	0.0	0.0	0.0
Third-Term Queue (Q3), veh/ln	0.0	0.0	0.0	0.0	0.0	0.0	0.0	0.0
Percentile bk-of-que factor (f_B%)	1.000	0.000	1.000	1.000	1.000	0.000	0.000	0.000
Percentile Back of Queue (Q%), veh/ln	3.9	0.0	7.6	21.3	1.4	0.0	0.0	0.0
Percentile Storage Ratio (RQ%)	0.76	0.00	0.68	1.57	0.23	0.00	0.00	0.00
Initial Queue (Qb), veh	0.0	0.0	0.0	0.0	0.0	0.0	0.0	0.0
Final (Residual) Queue (Qe), veh	0.0	0.0	0.0	0.0	0.0	0.0	0.0	0.0
Saturated Delay (ds), s/veh	0.0	0.0	0.0	0.0	0.0	0.0	0.0	0.0
Saturated Queue (Qs), veh	0.0	0.0	0.0	0.0	0.0	0.0	0.0	0.0
Saturated Capacity (cs), veh/h	0.0	0.0	0.0	0.0	0.0	0.0	0.0	0.0
Initial Queue Clear Time (tc), h	0.0	0.0	0.0	0.0	0.0	0.0	0.0	0.0
Middle Lane Group Data								
Assigned Movement	0	2	8	4	0	6	0	0
Lane Assignment		T	T	T		T		
Lanes in Group	0	2	1	1	0	2	0	0
Group Volume (v), veh/h	0.0	1316.0	273.1	260.4	0.0	1006.7	0.0	0.0
Group Sat. Flow (s), veh/h/ln	0.0	1695.1	1862.7	1862.7	0.0	1695.1	0.0	0.0
Queue Serve Time (g_s), s	0.0	59.7	24.1	20.5	0.0	38.5	0.0	0.0
Cycle Queue Clear Time (g_c), s	0.0	59.7	24.1	20.5	0.0	38.5	0.0	0.0
Lane Group Capacity (c), veh/h	0.0	1481.0	300.3	460.3	0.0	1541.9	0.0	0.0
Volume-to-Capacity Ratio (X)	0.000	0.889	0.910	0.566	0.000	0.653	0.000	0.000
Available Capacity (c_a), veh/h	0.0	1481.0	323.3	468.2	0.0	1541.9	0.0	0.0
Upstream Filter Factor (I)	0.000	1.000	1.000	1.000	0.000	1.000	0.000	0.000
Uniform Delay (d1), s/veh	0.0	43.3	68.9	55.1	0.0	35.3	0.0	0.0
Incremental Delay (d2), s/veh	0.0	8.3	27.3	1.5	0.0	1.0	0.0	0.0
Initial Queue Delay (d3), s/veh	0.0	0.0	0.0	0.0	0.0	0.0	0.0	0.0
Control Delay (d), s/veh	0.0	51.6	96.2	56.6	0.0	36.3	0.0	0.0
First-Term Queue (Q1), veh/ln	0.0	25.0	11.5	9.7	0.0	16.1	0.0	0.0
Second-Term Queue (Q2), veh/ln	0.0	1.7	2.3	0.2	0.0	0.2	0.0	0.0
Third-Term Queue (Q3), veh/ln	0.0	0.0	0.0	0.0	0.0	0.0	0.0	0.0
Percentile bk-of-que factor (f_B%)	0.000	1.000	1.000	1.000	0.000	1.000	0.000	0.000
Percentile Back of Queue (Q%), veh/ln	0.0	26.7	13.8	9.9	0.0	16.3	0.0	0.0
Percentile Storage Ratio (RQ%)	0.00	1.49	0.19	0.73	0.00	0.56	0.00	0.00

Initial Queue (Qb), veh	0.0	0.0	0.0	0.0	0.0	0.0	0.0	0.0
Final (Residual) Queue (Qe), veh	0.0	0.0	0.0	0.0	0.0	0.0	0.0	0.0
Saturated Delay (ds), s/veh	0.0	0.0	0.0	0.0	0.0	0.0	0.0	0.0
Saturated Queue (Qs), veh	0.0	0.0	0.0	0.0	0.0	0.0	0.0	0.0
Saturated Capacity (cs), veh/h	0.0	0.0	0.0	0.0	0.0	0.0	0.0	0.0
Initial Queue Clear Time (tc), h	0.0	0.0	0.0	0.0	0.0	0.0	0.0	0.0
Right Lane Group Data								
Assigned Movement	0	12	18	14	0	16	0	0
Lane Assignment		T+R	T+R	T+R		T+R		
Lanes in Group	0	1	1	1	0	1	0	0
Group Volume (v), veh/h	0.0	716.1	272.1	259.8	0.0	527.8	0.0	0.0
Group Sat. Flow (s), veh/h/ln	0.0	1841.7	1854.2	1856.7	0.0	1777.2	0.0	0.0
Queue Serve Time (g_s), s	0.0	59.9	24.1	20.5	0.0	38.5	0.0	0.0
Cycle Queue Clear Time (g_c), s	0.0	59.9	24.1	20.5	0.0	38.5	0.0	0.0
Prot RT Sat Flow Rate (s_R), veh/h/ln	0.0	0.0	0.0	0.0	0.0	0.0	0.0	0.0
Prot RT Eff. Green (g_R), s	0.0	0.0	0.0	0.0	0.0	0.0	0.0	0.0
Proportion RT Outside Lane (P_R)	0.000	0.065	0.026	0.018	0.000	0.273	0.000	0.000
Lane Group Capacity (c), veh/h	0.0	804.5	298.9	458.8	0.0	808.3	0.0	0.0
Volume-to-Capacity Ratio (X)	0.000	0.890	0.910	0.566	0.000	0.653	0.000	0.000
Available Capacity (c_a), veh/h	0.0	804.5	321.8	466.7	0.0	808.3	0.0	0.0
Upstream Filter Factor (I)	0.000	1.000	1.000	1.000	0.000	1.000	0.000	0.000
Uniform Delay (d1), s/veh	0.0	43.4	68.9	55.1	0.0	35.3	0.0	0.0
Incremental Delay (d2), s/veh	0.0	14.1	27.5	1.5	0.0	1.9	0.0	0.0
Initial Queue Delay (d3), s/veh	0.0	0.0	0.0	0.0	0.0	0.0	0.0	0.0
Control Delay (d), s/veh	0.0	57.5	96.4	56.6	0.0	37.2	0.0	0.0
First-Term Queue (Q1), veh/ln	0.0	27.3	11.5	9.7	0.0	16.8	0.0	0.0
Second-Term Queue (Q2), veh/ln	0.0	3.2	2.3	0.2	0.0	0.4	0.0	0.0
Third-Term Queue (Q3), veh/ln	0.0	0.0	0.0	0.0	0.0	0.0	0.0	0.0
Percentile bk-of-que factor (f_B%)	0.000	1.000	1.000	1.000	0.000	1.000	0.000	0.000
Percentile Back of Queue (Q%), veh/ln	0.0	30.4	13.8	9.9	0.0	17.3	0.0	0.0
Percentile Storage Ratio (RQ%)	0.00	1.69	0.19	0.73	0.00	0.60	0.00	0.00
Initial Queue (Qb), veh	0.0	0.0	0.0	0.0	0.0	0.0	0.0	0.0
Final (Residual) Queue (Qe), veh	0.0	0.0	0.0	0.0	0.0	0.0	0.0	0.0
Saturated Delay (ds), s/veh	0.0	0.0	0.0	0.0	0.0	0.0	0.0	0.0
Saturated Queue (Qs), veh	0.0	0.0	0.0	0.0	0.0	0.0	0.0	0.0
Saturated Capacity (cs), veh/h	0.0	0.0	0.0	0.0	0.0	0.0	0.0	0.0
Initial Queue Clear Time (tc), h	0.0	0.0	0.0	0.0	0.0	0.0	0.0	0.0
Intersection Summary								
HCM Average Control Delay		57.1						
HCM Level of Service		E						

Movement	EBL	EBT	EBR	WBL	WBT	WBR	NEL	NET	NER	SWL	SWT	SWR
Lane Configurations												
Volume (veh/h)	13	4	0	0	5	9	32	2305	19	0	0	0
Sign Control		Stop			Stop			Free			Free	
Grade		0%			0%			0%			0%	
Peak Hour Factor	0.96	0.96	0.96	0.96	0.96	0.96	0.96	0.96	0.96	0.96	0.96	0.96
Hourly flow rate (vph)	14	4	0	0	6	10	35	2545	21	0	0	0
Pedestrians												
Lane Width (ft)												
Walking Speed (ft/s)												
Percent Blockage												
Right turn flare (veh)												
Median type								None			None	
Median storage veh)												
Upstream signal (ft)												
pX, platoon unblocked												
vC, conflicting volume	932	2637	0	2628	2626	859	0			2566		
vC1, stage 1 conf vol												
vC2, stage 2 conf vol												
vCu, unblocked vol	932	2637	0	2628	2626	859	0			2566		
tC, single (s)	7.5	6.5	6.9	7.5	6.5	6.9	4.1			4.1		
tC, 2 stage (s)												
tF (s)	3.5	4.0	3.3	3.5	4.0	3.3	2.2			2.2		
p0 queue free %	92	80	100	100	76	97	98			100		
cM capacity (veh/h)	172	23	1084	10	23	300	1622			169		

Direction, Lane #	EB 1	WB 1	NE 1	NE 2	NE 3
Volume Total	19	15	672	1273	657
Volume Left	14	0	35	0	0
Volume Right	0	10	0	0	21
cSH	67	57	1622	1700	1700
Volume to Capacity	0.28	0.27	0.02	0.75	0.39
Queue Length 95th (ft)	25	24	2	0	0
Control Delay (s)	78.0	91.1	0.6	0.0	0.0
Lane LOS	F	F	A		
Approach Delay (s)	78.0	91.1	0.2		
Approach LOS	F	F			

Intersection Summary			
Average Delay	1.2		
Intersection Capacity Utilization	62.7%	ICU Level of Service	B
Analysis Period (min)	15		

Movement	EBL	EBT	EBR	WBL	WBT	WBR	NEL	NET	NER	SWL	SWT	SWR
Lane Configurations												
Volume (veh/h)	2	10	0	0	10	11	5	2325	21	0	0	0
Sign Control		Stop			Stop			Free			Free	
Grade		0%			0%			0%			0%	
Peak Hour Factor	0.93	0.93	0.93	0.93	0.93	0.93	0.93	0.93	0.93	0.93	0.93	0.93
Hourly flow rate (vph)	2	11	0	0	11	13	6	2650	24	0	0	0
Pedestrians												
Lane Width (ft)												
Walking Speed (ft/s)												
Percent Blockage												
Right turn flare (veh)												
Median type								None			None	
Median storage veh)												
Upstream signal (ft)												
pX, platoon unblocked												
vC, conflicting volume	913	2685	0	2679	2673	895	0			2674		
vC1, stage 1 conf vol												
vC2, stage 2 conf vol												
vCu, unblocked vol	913	2685	0	2679	2673	895	0			2674		
tC, single (s)	7.5	6.5	6.9	7.5	6.5	6.9	4.1			4.1		
tC, 2 stage (s)												
tF (s)	3.5	4.0	3.3	3.5	4.0	3.3	2.2			2.2		
p0 queue free %	98	47	100	100	48	96	100			100		
cM capacity (veh/h)	128	21	1084	6	22	284	1622			153		

Direction, Lane #	EB 1	WB 1	NE 1	NE 2	NE 3
Volume Total	14	24	668	1325	686
Volume Left	2	0	6	0	0
Volume Right	0	13	0	0	24
cSH	25	42	1622	1700	1700
Volume to Capacity	0.55	0.57	0.00	0.78	0.40
Queue Length 95th (ft)	42	52	0	0	0
Control Delay (s)	262.9	169.4	0.1	0.0	0.0
Lane LOS	F	F	A		
Approach Delay (s)	262.9	169.4	0.0		
Approach LOS	F	F			

Intersection Summary			
Average Delay	2.8		
Intersection Capacity Utilization	58.2%	ICU Level of Service	B
Analysis Period (min)	15		

HCM Unsignalized Intersection Capacity Analysis
1: SW 97th Ave. & SW 174th St.

2/11/2015

Movement	EBL	EBT	EBR	WBL	WBT	WBR	NBL	NBT	NBR	SBL	SBT	SBR
Lane Configurations												
Sign Control		Stop			Stop			Stop			Stop	
Volume (vph)	6	114	60	54	98	4	44	7	24	4	7	8
Peak Hour Factor	0.84	0.84	0.84	0.84	0.84	0.84	0.84	0.84	0.84	0.84	0.84	0.84
Hourly flow rate (vph)	8	144	76	68	124	5	56	9	30	5	9	10

Direction, Lane #	EB 1	WB 1	NB 1	SB 1
Volume Total (vph)	227	197	95	24
Volume Left (vph)	8	68	56	5
Volume Right (vph)	76	5	30	10
Hadj (s)	-0.16	0.09	-0.04	-0.18
Departure Headway (s)	4.3	4.5	4.8	4.8
Degree Utilization, x	0.27	0.25	0.13	0.03
Capacity (veh/h)	815	760	681	668
Control Delay (s)	8.8	9.0	8.6	8.0
Approach Delay (s)	8.8	9.0	8.6	8.0
Approach LOS	A	A	A	A

Intersection Summary			
Delay	8.8		
HCM Level of Service	A		
Intersection Capacity Utilization	40.1%	ICU Level of Service	A
Analysis Period (min)	15		

Lane Group	EBL	NBT	SBT	NET
Lane Group Flow (vph)	131	281	30	2234
v/c Ratio	0.70	0.57	0.09	0.76
Control Delay	78.0	17.5	47.5	23.7
Queue Delay	0.0	0.0	0.0	0.0
Total Delay	78.0	17.5	47.5	23.7
Queue Length 50th (ft)	113	46	22	521
Queue Length 95th (ft)	184	143	53	619
Internal Link Dist (ft)	257	1041	665	1300
Turn Bay Length (ft)				
Base Capacity (vph)	238	490	333	2956
Starvation Cap Reductn	0	0	0	0
Spillback Cap Reductn	0	0	0	0
Storage Cap Reductn	0	0	0	0
Reduced v/c Ratio	0.55	0.57	0.09	0.76

Intersection Summary

Movement	EBL	EBR	NBL	NBT	NBR	SBT	SBR	NEL2	NEL	NET	NER
Lane Configurations											
Volume (vph)	2	116	4	21	228	13	13	4	5	1968	25
Ideal Flow (vphpl)	1900	1900	1900	1900	1900	1900	1900	1900	1900	1900	1900
Total Lost time (s)	5.0			5.0		5.0				5.0	
Lane Util. Factor	1.00			1.00		1.00				0.91	
Frt	0.87			0.88		0.93				1.00	
Flt Protected	1.00			1.00		1.00				1.00	
Satd. Flow (prot)	1614			1634		1737				5075	
Flt Permitted	1.00			1.00		1.00				1.00	
Satd. Flow (perm)	1614			1631		1737				5075	
Peak-hour factor, PHF	0.95	0.95	0.95	0.95	0.95	0.95	0.95	0.95	0.95	0.95	0.95
Growth Factor (vph)	106%	106%	106%	106%	106%	106%	106%	106%	106%	106%	106%
Adj. Flow (vph)	2	129	4	23	254	15	15	4	6	2196	28
RTOR Reduction (vph)	0	0	0	178	0	0	0	0	0	1	0
Lane Group Flow (vph)	131	0	0	103	0	30	0	0	0	2233	0
Turn Type	NA		Perm	NA		NA		Perm	Perm	NA	
Protected Phases	3			4		8				6	
Permitted Phases			4					6	6		
Actuated Green, G (s)	15.7			26.0		26.0				79.1	
Effective Green, g (s)	15.7			26.0		26.0				79.1	
Actuated g/C Ratio	0.12			0.19		0.19				0.58	
Clearance Time (s)	5.0			5.0		5.0				5.0	
Vehicle Extension (s)	3.0			3.0		3.0				3.0	
Lane Grp Cap (vph)	187			312		333				2956	
v/s Ratio Prot	c0.08					0.02					
v/s Ratio Perm				c0.06						0.44	
v/c Ratio	0.70			0.33		0.09				0.76	
Uniform Delay, d1	57.8			47.4		45.2				21.1	
Progression Factor	1.00			1.00		1.00				1.00	
Incremental Delay, d2	11.2			2.8		0.5				1.9	
Delay (s)	69.0			50.2		45.7				23.0	
Level of Service	E			D		D				C	
Approach Delay (s)	69.0			50.2		45.7				23.0	
Approach LOS	E			D		D				C	

Intersection Summary			
HCM Average Control Delay	28.4	HCM Level of Service	C
HCM Volume to Capacity ratio	0.66		
Actuated Cycle Length (s)	135.8	Sum of lost time (s)	15.0
Intersection Capacity Utilization	81.3%	ICU Level of Service	D
Analysis Period (min)	15		

c Critical Lane Group

Movement	EBL	EBR	NBL	NBT	SBT	SBR
Lane Configurations						
Volume (veh/h)	6	32	28	264	140	5
Sign Control	Stop			Free	Free	
Grade	0%			0%	0%	
Peak Hour Factor	0.93	0.93	0.93	0.93	0.93	0.93
Hourly flow rate (vph)	7	36	32	301	160	6
Pedestrians						
Lane Width (ft)						
Walking Speed (ft/s)						
Percent Blockage						
Right turn flare (veh)						
Median type				None	None	
Median storage veh)						
Upstream signal (ft)					1121	
pX, platoon unblocked						
vC, conflicting volume	527	162	165			
vC1, stage 1 conf vol						
vC2, stage 2 conf vol						
vCu, unblocked vol	527	162	165			
tC, single (s)	6.4	6.2	4.1			
tC, 2 stage (s)						
tF (s)	3.5	3.3	2.2			
p0 queue free %	99	96	98			
cM capacity (veh/h)	500	882	1413			

Direction, Lane #	EB 1	NB 1	SB 1
Volume Total	43	333	165
Volume Left	7	32	0
Volume Right	36	0	6
cSH	787	1413	1700
Volume to Capacity	0.06	0.02	0.10
Queue Length 95th (ft)	4	2	0
Control Delay (s)	9.8	0.9	0.0
Lane LOS	A	A	
Approach Delay (s)	9.8	0.9	0.0
Approach LOS	A		

Intersection Summary			
Average Delay	1.4		
Intersection Capacity Utilization	37.8%	ICU Level of Service	A
Analysis Period (min)	15		

Movement	WBL	WBR	NBT	NBR	SBL	SBT
Lane Configurations						
Volume (veh/h)	39	32	268	11	24	136
Sign Control	Stop		Free			Free
Grade	0%		0%			0%
Peak Hour Factor	0.97	0.97	0.97	0.97	0.97	0.97
Hourly flow rate (vph)	43	35	293	12	26	149
Pedestrians						
Lane Width (ft)						
Walking Speed (ft/s)						
Percent Blockage						
Right turn flare (veh)						
Median type			None			None
Median storage veh)						
Upstream signal (ft)						
pX, platoon unblocked						
vC, conflicting volume	500	299			305	
vC1, stage 1 conf vol						
vC2, stage 2 conf vol						
vCu, unblocked vol	500	299			305	
tC, single (s)	6.4	6.2			4.1	
tC, 2 stage (s)						
tF (s)	3.5	3.3			2.2	
p0 queue free %	92	95			98	
cM capacity (veh/h)	519	741			1256	

Direction, Lane #	WB 1	NB 1	SB 1
Volume Total	78	305	175
Volume Left	43	0	26
Volume Right	35	12	0
cSH	600	1700	1256
Volume to Capacity	0.13	0.18	0.02
Queue Length 95th (ft)	11	0	2
Control Delay (s)	11.9	0.0	1.3
Lane LOS	B		A
Approach Delay (s)	11.9	0.0	1.3
Approach LOS	B		

Intersection Summary			
Average Delay	2.1		
Intersection Capacity Utilization	39.0%	ICU Level of Service	A
Analysis Period (min)	15		

Movement	EBL	EBR	NBL	NBT	SBT	SBR
Lane Configurations						
Volume (veh/h)	9	23	6	291	166	2
Sign Control	Stop			Free	Free	
Grade	0%			0%	0%	
Peak Hour Factor	0.94	0.94	0.94	0.94	0.94	0.94
Hourly flow rate (vph)	10	26	7	328	187	2
Pedestrians						
Lane Width (ft)						
Walking Speed (ft/s)						
Percent Blockage						
Right turn flare (veh)						
Median type				None	None	
Median storage veh)						
Upstream signal (ft)				1230		
pX, platoon unblocked	0.94					
vC, conflicting volume	530	188	189			
vC1, stage 1 conf vol						
vC2, stage 2 conf vol						
vCu, unblocked vol	471	188	189			
tC, single (s)	6.4	6.2	4.1			
tC, 2 stage (s)						
tF (s)	3.5	3.3	2.2			
p0 queue free %	98	97	100			
cM capacity (veh/h)	517	854	1384			

Direction, Lane #	EB 1	NB 1	SB 1
Volume Total	36	335	189
Volume Left	10	7	0
Volume Right	26	0	2
cSH	722	1384	1700
Volume to Capacity	0.05	0.00	0.11
Queue Length 95th (ft)	4	0	0
Control Delay (s)	10.3	0.2	0.0
Lane LOS	B	A	
Approach Delay (s)	10.3	0.2	0.0
Approach LOS	B		

Intersection Summary			
Average Delay	0.8		
Intersection Capacity Utilization	31.3%	ICU Level of Service	A
Analysis Period (min)	15		

Movement	EBL	EBT	EBR	WBL	WBT	WBR	NBL	NBT	NBR	SBL	SBT	SBR
Lane Configurations												
Volume (veh/h)	1	0	6	5	2	3	5	303	5	2	193	6
Sign Control		Stop			Stop			Free			Free	
Grade		0%			0%			0%			0%	
Peak Hour Factor	0.92	0.92	0.92	0.92	0.92	0.92	0.92	0.92	0.92	0.92	0.92	0.92
Hourly flow rate (vph)	1	0	7	6	2	3	6	349	6	2	222	7
Pedestrians												
Lane Width (ft)												
Walking Speed (ft/s)												
Percent Blockage												
Right turn flare (veh)												
Median type								None			None	
Median storage veh)												
Upstream signal (ft)								904				
pX, platoon unblocked	0.90	0.90		0.90	0.90	0.90				0.90		
vC, conflicting volume	599	597	226	601	597	352	229			355		
vC1, stage 1 conf vol												
vC2, stage 2 conf vol												
vCu, unblocked vol	503	501	226	505	502	230	229			233		
tC, single (s)	7.1	6.5	6.2	7.1	6.5	6.2	4.1			4.1		
tC, 2 stage (s)												
tF (s)	3.5	4.0	3.3	3.5	4.0	3.3	2.2			2.2		
p0 queue free %	100	100	99	99	99	100	100			100		
cM capacity (veh/h)	427	424	814	426	424	731	1339			1206		

Direction, Lane #	EB 1	WB 1	NB 1	SB 1
Volume Total	8	12	361	232
Volume Left	1	6	6	2
Volume Right	7	3	6	7
cSH	720	486	1339	1206
Volume to Capacity	0.01	0.02	0.00	0.00
Queue Length 95th (ft)	1	2	0	0
Control Delay (s)	10.1	12.6	0.2	0.1
Lane LOS	B	B	A	A
Approach Delay (s)	10.1	12.6	0.2	0.1
Approach LOS	B	B		

Intersection Summary			
Average Delay	0.5		
Intersection Capacity Utilization	30.5%	ICU Level of Service	A
Analysis Period (min)	15		

Movement	EBL	EBT	EBR	WBL	WBT	WBR	NBL	NBT	NBR	SBL	SBT	SBR
Lane Configurations												
Volume (veh/h)	0	0	2	1	1	2	2	311	1	1	211	2
Sign Control		Stop			Stop			Free			Free	
Grade		0%			0%			0%			0%	
Peak Hour Factor	0.95	0.95	0.95	0.95	0.95	0.95	0.95	0.95	0.95	0.95	0.95	0.95
Hourly flow rate (vph)	0	0	2	1	1	2	2	347	1	1	235	2
Pedestrians												
Lane Width (ft)												
Walking Speed (ft/s)												
Percent Blockage												
Right turn flare (veh)												
Median type								None			None	
Median storage veh)												
Upstream signal (ft)								601				
pX, platoon unblocked	0.89	0.89		0.89	0.89	0.89				0.89		
vC, conflicting volume	594	591	237	593	592	348	238			348		
vC1, stage 1 conf vol												
vC2, stage 2 conf vol												
vCu, unblocked vol	487	484	237	486	485	212	238			213		
tC, single (s)	7.1	6.5	6.2	7.1	6.5	6.2	4.1			4.1		
tC, 2 stage (s)												
tF (s)	3.5	4.0	3.3	3.5	4.0	3.3	2.2			2.2		
p0 queue free %	100	100	100	100	100	100	100			100		
cM capacity (veh/h)	436	430	802	438	430	741	1329			1215		

Direction, Lane #	EB 1	WB 1	NB 1	SB 1
Volume Total	2	4	350	239
Volume Left	0	1	2	1
Volume Right	2	2	1	2
cSH	802	547	1329	1215
Volume to Capacity	0.00	0.01	0.00	0.00
Queue Length 95th (ft)	0	1	0	0
Control Delay (s)	9.5	11.6	0.1	0.0
Lane LOS	A	B	A	A
Approach Delay (s)	9.5	11.6	0.1	0.0
Approach LOS	A	B		

Intersection Summary			
Average Delay	0.2		
Intersection Capacity Utilization	28.9%	ICU Level of Service	A
Analysis Period (min)	15		

Movement	EBL	EBT	EBR	WBL	WBT	WBR	NBL	NBT	NBR	SBL	SBT	SBR
Lane Configurations												
Volume (veh/h)	4	0	21	3	1	2	5	307	2	0	212	1
Sign Control		Stop			Stop			Free			Free	
Grade		0%			0%			0%			0%	
Peak Hour Factor	0.97	0.97	0.97	0.97	0.97	0.97	0.97	0.97	0.97	0.97	0.97	0.97
Hourly flow rate (vph)	4	0	23	3	1	2	5	335	2	0	232	1
Pedestrians												
Lane Width (ft)												
Walking Speed (ft/s)												
Percent Blockage												
Right turn flare (veh)												
Median type								None			None	
Median storage veh)												
Upstream signal (ft)								300				
pX, platoon unblocked	0.89	0.89		0.89	0.89	0.89				0.89		
vC, conflicting volume	582	581	232	603	580	337	233			338		
vC1, stage 1 conf vol												
vC2, stage 2 conf vol												
vCu, unblocked vol	469	467	232	492	467	193	233			194		
tC, single (s)	7.1	6.5	6.2	7.1	6.5	6.2	4.1			4.1		
tC, 2 stage (s)												
tF (s)	3.5	4.0	3.3	3.5	4.0	3.3	2.2			2.2		
p0 queue free %	99	100	97	99	100	100	100			100		
cM capacity (veh/h)	445	437	807	420	438	755	1335			1227		

Direction, Lane #	EB 1	WB 1	NB 1	SB 1
Volume Total	27	7	343	233
Volume Left	4	3	5	0
Volume Right	23	2	2	1
cSH	714	497	1335	1227
Volume to Capacity	0.04	0.01	0.00	0.00
Queue Length 95th (ft)	3	1	0	0
Control Delay (s)	10.2	12.3	0.2	0.0
Lane LOS	B	B	A	
Approach Delay (s)	10.2	12.3	0.2	0.0
Approach LOS	B	B		

Intersection Summary			
Average Delay	0.7		
Intersection Capacity Utilization	31.5%	ICU Level of Service	A
Analysis Period (min)	15		

Lane Group	EBL	EBT	EBR	WBL	WBT	NBL	NBT	SBL	SBT
Lane Group Flow (vph)	71	388	62	87	456	128	296	24	234
v/c Ratio	0.13	0.66	0.14	0.17	0.38	0.25	0.37	0.06	0.38
Control Delay	11.9	30.3	8.4	12.3	23.4	21.6	30.2	20.3	33.4
Queue Delay	0.0	0.0	0.0	0.0	0.0	0.0	0.0	0.0	0.0
Total Delay	11.9	30.3	8.4	12.3	23.4	21.6	30.2	20.3	33.4
Queue Length 50th (ft)	17	148	0	21	98	47	68	8	58
Queue Length 95th (ft)	45	267	32	53	161	102	120	28	105
Internal Link Dist (ft)		1915			422		229		156
Turn Bay Length (ft)	130			95		155		130	
Base Capacity (vph)	570	916	701	494	1802	491	1132	406	946
Starvation Cap Reductn	0	0	0	0	0	0	0	0	0
Spillback Cap Reductn	0	0	0	0	0	0	0	0	0
Storage Cap Reductn	0	0	0	0	0	0	0	0	0
Reduced v/c Ratio	0.12	0.42	0.09	0.18	0.25	0.26	0.26	0.06	0.25

Intersection Summary

Movement	EBL	EBT	EBR	WBL	WBT	WBR	NBL	NBT	NBR	SBL	SBT	SBR
Lane Configurations												
Volume (vph)	61	333	53	75	374	17	110	217	37	21	168	33
Ideal Flow (vphpl)	1900	1900	1900	1900	1900	1900	1900	1900	1900	1900	1900	1900
Total Lost time (s)	3.0	3.0	5.0	3.0	3.0		3.0	3.0		3.0	3.0	
Lane Util. Factor	1.00	1.00	1.00	1.00	0.95		1.00	0.95		1.00	0.95	
Frt	1.00	1.00	0.85	1.00	0.99		1.00	0.98		1.00	0.98	
Flt Protected	0.95	1.00	1.00	0.95	1.00		0.95	1.00		0.95	1.00	
Satd. Flow (prot)	1770	1863	1583	1770	3516		1770	3462		1770	3453	
Flt Permitted	0.49	1.00	1.00	0.51	1.00		0.61	1.00		0.57	1.00	
Satd. Flow (perm)	911	1863	1583	952	3516		1129	3462		1064	3453	
Peak-hour factor, PHF	0.91	0.91	0.91	0.91	0.91	0.91	0.91	0.91	0.91	0.91	0.91	0.91
Growth Factor (vph)	106%	106%	106%	106%	106%	106%	106%	106%	106%	106%	106%	106%
Adj. Flow (vph)	71	388	62	87	436	20	128	253	43	24	196	38
RTOR Reduction (vph)	0	0	47	0	3	0	0	12	0	0	14	0
Lane Group Flow (vph)	71	388	15	87	453	0	128	284	0	24	220	0
Turn Type	custom	NA	custom	custom	NA		custom	NA		custom	NA	
Protected Phases	1 2	2 4		1 3	3 4		5 6	6 8		5 7	7 8	
Permitted Phases	4		4	4			8			8		
Actuated Green, G (s)	35.6	25.6	21.4	32.1	28.1		27.2	15.7		20.6	15.1	
Effective Green, g (s)	35.6	25.6	21.4	32.1	28.1		27.2	15.7		20.6	15.1	
Actuated g/C Ratio	0.39	0.28	0.24	0.36	0.31		0.30	0.17		0.23	0.17	
Clearance Time (s)			5.0									
Vehicle Extension (s)			3.0									
Lane Grp Cap (vph)	495	529	376	436	1095		460	603		323	578	
v/s Ratio Prot	0.02	c0.21		c0.02	c0.13		c0.05	c0.08		0.01	c0.06	
v/s Ratio Perm	0.03		0.01	0.05			0.03			0.01		
v/c Ratio	0.14	0.73	0.04	0.20	0.41		0.28	0.47		0.07	0.38	
Uniform Delay, d1	17.2	29.2	26.5	19.7	24.5		23.7	33.5		27.2	33.4	
Progression Factor	1.00	1.00	1.00	1.00	1.00		1.00	1.00		1.00	1.00	
Incremental Delay, d2	0.1	5.2	0.0	0.2	0.3		0.3	0.6		0.1	0.4	
Delay (s)	17.3	34.4	26.5	19.9	24.8		24.0	34.1		27.3	33.8	
Level of Service	B	C	C	B	C		C	C		C	C	
Approach Delay (s)		31.2			24.0			31.1			33.2	
Approach LOS		C			C			C			C	

Intersection Summary			
HCM Average Control Delay	29.2	HCM Level of Service	C
HCM Volume to Capacity ratio	0.49		
Actuated Cycle Length (s)	90.2	Sum of lost time (s)	24.0
Intersection Capacity Utilization	48.8%	ICU Level of Service	A
Analysis Period (min)	15		

c Critical Lane Group

Movement	EBL	EBT	WBT	WBR	SBL	SBR
Lane Configurations						
Volume (veh/h)	3	403	477	8	6	1
Sign Control		Free	Free		Stop	
Grade		0%	0%		0%	
Peak Hour Factor	0.94	0.94	0.94	0.94	0.94	0.94
Hourly flow rate (vph)	3	454	538	9	7	1
Pedestrians						
Lane Width (ft)						
Walking Speed (ft/s)						
Percent Blockage						
Right turn flare (veh)						
Median type		None	None			
Median storage veh)						
Upstream signal (ft)		502				
pX, platoon unblocked					0.81	
vC, conflicting volume	547				1004	542
vC1, stage 1 conf vol						
vC2, stage 2 conf vol						
vCu, unblocked vol	547				886	542
tC, single (s)	4.1				6.4	6.2
tC, 2 stage (s)						
tF (s)	2.2				3.5	3.3
p0 queue free %	100				97	100
cM capacity (veh/h)	1022				254	540

Direction, Lane #	EB 1	EB 2	WB 1	SB 1
Volume Total	3	454	547	8
Volume Left	3	0	0	7
Volume Right	0	0	9	1
cSH	1022	1700	1700	275
Volume to Capacity	0.00	0.27	0.32	0.03
Queue Length 95th (ft)	0	0	0	2
Control Delay (s)	8.5	0.0	0.0	18.5
Lane LOS	A			C
Approach Delay (s)	0.1		0.0	18.5
Approach LOS				C

Intersection Summary			
Average Delay	0.2		
Intersection Capacity Utilization	37.1%	ICU Level of Service	A
Analysis Period (min)	15		

Lane Group	EBL	EBT	WBL	WBT	NBL	NBT	SBL	SBT
Lane Group Flow (vph)	289	446	250	513	130	1711	198	1989
v/c Ratio	0.89	0.69	0.87	0.86	0.81	0.83	0.86	0.89
Control Delay	82.8	54.5	83.4	69.4	61.8	41.1	65.3	40.6
Queue Delay	0.0	0.0	0.0	0.0	0.0	0.0	0.0	0.0
Total Delay	82.8	54.5	83.4	69.4	61.8	41.1	65.3	40.6
Queue Length 50th (ft)	257	186	243	248	65	517	125	606
Queue Length 95th (ft)	#411	247	#404	#332	#185	584	#265	679
Internal Link Dist (ft)		364		1915		469		768
Turn Bay Length (ft)			286		160		130	
Base Capacity (vph)	353	703	310	643	161	2053	240	2268
Starvation Cap Reductn	0	0	0	0	0	0	0	0
Spillback Cap Reductn	0	0	0	0	0	0	0	0
Storage Cap Reductn	0	0	0	0	0	0	0	0
Reduced v/c Ratio	0.82	0.63	0.81	0.80	0.81	0.83	0.82	0.88

Intersection Summary

95th percentile volume exceeds capacity, queue may be longer.
Queue shown is maximum after two cycles.

Movement	EBL	EBT	EBR	WBL	WBT	WBR	NBL	NBT	NBR	SBL	SBT	SBR
Lane Configurations												
Volume (vph)	256	296	99	321	340	16	115	1405	113	176	1558	206
Ideal Flow (vphpl)	1900	1900	1900	1900	1900	1900	1900	1900	1900	1900	1900	1900
Total Lost time (s)	5.0	5.0		5.0	5.0		3.0	5.0		3.0	5.0	
Lane Util. Factor	1.00	0.95		0.91	0.91		1.00	0.91		1.00	0.91	
Frt	1.00	0.96		1.00	0.99		1.00	0.99		1.00	0.98	
Flt Protected	0.95	1.00		0.95	0.99		0.95	1.00		0.95	1.00	
Satd. Flow (prot)	1770	3406		1610	3336		1770	5029		1770	4996	
Flt Permitted	0.95	1.00		0.95	0.99		0.07	1.00		0.07	1.00	
Satd. Flow (perm)	1770	3406		1610	3336		135	5029		128	4996	
Peak-hour factor, PHF	0.94	0.94	0.94	0.94	0.94	0.94	0.94	0.94	0.94	0.94	0.94	0.94
Growth Factor (vph)	106%	106%	106%	106%	106%	106%	106%	106%	106%	106%	106%	106%
Adj. Flow (vph)	289	334	112	362	383	18	130	1584	127	198	1757	232
RTOR Reduction (vph)	0	24	0	0	2	0	0	7	0	0	12	0
Lane Group Flow (vph)	289	422	0	250	511	0	130	1704	0	198	1977	0
Turn Type	Split	NA		Split	NA		pm+pt	NA		pm+pt	NA	
Protected Phases	4	4		8	8		5	2		1	6	
Permitted Phases							2			6		
Actuated Green, G (s)	24.9	24.9		24.1	24.1		63.2	55.2		71.5	60.5	
Effective Green, g (s)	24.9	24.9		24.1	24.1		63.2	55.2		71.5	60.5	
Actuated g/C Ratio	0.18	0.18		0.18	0.18		0.47	0.41		0.53	0.45	
Clearance Time (s)	5.0	5.0		5.0	5.0		3.0	5.0		3.0	5.0	
Vehicle Extension (s)	3.0	3.0		3.0	3.0		3.0	3.0		3.0	3.0	
Lane Grp Cap (vph)	325	626		286	593		159	2049		229	2231	
v/s Ratio Prot	c0.16	0.12		c0.16	0.15		0.05	0.34		c0.08	c0.40	
v/s Ratio Perm							0.33			0.37		
v/c Ratio	0.89	0.67		0.87	0.86		0.82	0.83		0.86	0.89	
Uniform Delay, d1	54.0	51.5		54.2	54.1		29.0	36.0		38.3	34.3	
Progression Factor	1.00	1.00		1.00	1.00		1.00	1.00		1.00	1.00	
Incremental Delay, d2	24.2	2.9		24.2	12.3		26.7	4.1		27.0	4.7	
Delay (s)	78.1	54.4		78.5	66.4		55.7	40.1		65.2	39.0	
Level of Service	E	D		E	E		E	D		E	D	
Approach Delay (s)		63.7			70.4			41.2			41.4	
Approach LOS		E			E			D			D	

Intersection Summary			
HCM Average Control Delay	48.3	HCM Level of Service	D
HCM Volume to Capacity ratio	0.86		
Actuated Cycle Length (s)	135.5	Sum of lost time (s)	13.0
Intersection Capacity Utilization	88.0%	ICU Level of Service	E
Analysis Period (min)	15		

c Critical Lane Group

Movement	EBL	EBT	EBR	WBL	WBT	WBR	NBL	NBT	NBR	SBL	SBT	SBR
Lane Configurations												
Volume (vph)	256	296	99	321	340	16	115	1405	113	176	1558	206
Movement Number	7	4	14	3	8	18	5	2	12	1	6	16
Initial Queue, veh	0	0	0	0	0	0	0	0	0	0	0	0
Ped-Bike Adj. Factor (A_pbT)	1.00		1.00	1.00		1.00	1.00		1.00	1.00		1.00
Parking, Bus Adj. Factors	1.00	1.00	1.00	1.00	1.00	1.00	1.00	1.00	1.00	1.00	1.00	1.00
Adj. Sat. Flow Rate, veh/h/ln	1863	1863	1863	1863	1863	1863	1863	1863	1863	1863	1863	1863
Lanes	1	2	0	1	2	0	1	3	0	1	3	0
Lane Assignment												
Capacity, veh/h	309	469	154	350	696	33	178	2010	162	233	1992	263
Proportion Arriving On Green	0.17	0.17	0.17	0.20	0.20	0.20	0.05	0.42	0.42	0.07	0.44	0.44
Movement Delay, s/veh	72.2	54.3	55.4	94.2	48.6	48.7	38.9	35.9	38.9	39.7	36.5	40.1
Movement LOS	E	D	E	F	D	D	D	D	D	D	D	D
Approach Volume, veh/h		693			720			1737			2064	
Approach Delay, s/veh		61.7			70.3			37.1			37.9	
Approach LOS		E			E			D			D	

Timer:	1	2	3	4	5	6	7	8
Assigned Phase	1	2	8	4	5	6		
Case No	1.1	4.0	10.0	10.0	1.1	4.0		
Phase Duration (G+Y+Rc), s	12.63	60.22	31.00	28.00	10.09	62.76		
Change Period (Y+Rc), s	3.00	5.00	5.00	5.00	3.00	5.00		
Max. Allowable Headway (MAH), s	4.00	3.94	3.96	3.99	4.00	3.94		
Maximum Green Setting (Gmax), s	14.00	55.00	26.00	27.00	8.00	61.00		
Max. Queue Clearance Time (g_c+I1), s	9.42	36.68	27.23	21.74	7.15	44.72		
Green Extension Time (g_e), s	0.22	14.58	0.00	1.26	0.02	13.04		
Probability of Phase Call (p_c)	0.999	1.000	1.000	1.000	0.989	1.000		
Probability of Max Out (p_x)	0.648	0.787	1.000	0.672	1.000	0.814		

Left-Turn Movement Data					
Assigned Movement	1		3	7	5
Mvmt. Sat Flow, veh/h	1774.04		1774.04	1774.04	1774.04

Through Movement Data					
Assigned Movement		2	8	4	6
Mvmt. Sat Flow, veh/h		4798.99	3530.63	2687.70	4547.94

Right-Turn Movement Data					
Assigned Movement		12	18	14	16
Mvmt. Sat Flow, veh/h		385.86	165.63	882.12	599.25

Left Lane Group Data								
Assigned Movement	1	0	3	7	5	0	0	0
Lane Assignment	L (Pr/Pm)		L		LL (Pr/Pm)			
Lanes in Group	1	0	1	1	1	0	0	0
Group Volume (v), veh/h	187.2	0.0	341.5	272.3	122.3	0.0	0.0	0.0
Group Sat. Flow (s), veh/h/ln	1774.0	0.0	1774.0	1774.0	1774.0	0.0	0.0	0.0
Queue Serve Time (g_s), s	7.4	0.0	25.2	19.7	5.2	0.0	0.0	0.0
Cycle Queue Clear Time (g_c), s	7.4	0.0	25.2	19.7	5.2	0.0	0.0	0.0

Perm LT Sat Flow Rate (s_l), veh/h/ln	311.9	0.0	1774.0	1774.0	241.9	0.0	0.0	0.0
Shared LT Sat Flow (s_sh), veh/h/ln	0.0	0.0	0.0	0.0	0.0	0.0	0.0	0.0
Perm LT Eff. Green (g_p), s	59.3	0.0	0.0	0.0	55.2	0.0	0.0	0.0
Perm LT Serve Time (g_u), s	20.5	0.0	0.0	0.0	15.0	0.0	0.0	0.0
Perm LT Que Serve Time (g_ps), s	20.5	0.0	0.0	0.0	15.0	0.0	0.0	0.0
Time to First Blk (g_f), s	0.0	0.0	0.0	0.0	0.0	0.0	0.0	0.0
Serve Time pre Blk (g_fs), s	0.0	0.0	0.0	0.0	0.0	0.0	0.0	0.0
Proportion LT Inside Lane (P_L)	1.000	0.000	1.000	1.000	1.000	0.000	0.000	0.000
Lane Group Capacity (c), veh/h	232.8	0.0	349.8	309.5	177.7	0.0	0.0	0.0
Volume-to-Capacity Ratio (X)	0.804	0.000	0.976	0.880	0.689	0.000	0.000	0.000
Available Capacity (c_a), veh/h	291.6	0.0	349.8	363.3	189.8	0.0	0.0	0.0
Upstream Filter Factor (I)	1.000	0.000	1.000	1.000	1.000	0.000	0.000	0.000
Uniform Delay (d1), s/veh	27.5	0.0	52.6	53.1	29.6	0.0	0.0	0.0
Incremental Delay (d2), s/veh	12.2	0.0	41.6	19.1	9.3	0.0	0.0	0.0
Initial Queue Delay (d3), s/veh	0.0	0.0	0.0	0.0	0.0	0.0	0.0	0.0
Control Delay (d), s/veh	39.7	0.0	94.2	72.2	38.9	0.0	0.0	0.0
First-Term Queue (Q1), veh/ln	3.1	0.0	11.2	8.8	2.2	0.0	0.0	0.0
Second-Term Queue (Q2), veh/ln	0.8	0.0	4.0	1.6	0.5	0.0	0.0	0.0
Third-Term Queue (Q3), veh/ln	0.0	0.0	0.0	0.0	0.0	0.0	0.0	0.0
Percentile bk-of-que factor (f_B%)	1.000	0.000	1.000	1.000	1.000	0.000	0.000	0.000
Percentile Back of Queue (Q%), veh/ln	3.9	0.0	15.3	10.4	2.6	0.0	0.0	0.0
Percentile Storage Ratio (RQ%)	0.76	0.00	1.36	0.77	0.42	0.00	0.00	0.00
Initial Queue (Qb), veh	0.0	0.0	0.0	0.0	0.0	0.0	0.0	0.0
Final (Residual) Queue (Qe), veh	0.0	0.0	0.0	0.0	0.0	0.0	0.0	0.0
Saturated Delay (ds), s/veh	0.0	0.0	0.0	0.0	0.0	0.0	0.0	0.0
Saturated Queue (Qs), veh	0.0	0.0	0.0	0.0	0.0	0.0	0.0	0.0
Saturated Capacity (cs), veh/h	0.0	0.0	0.0	0.0	0.0	0.0	0.0	0.0
Initial Queue Clear Time (tc), h	0.0	0.0	0.0	0.0	0.0	0.0	0.0	0.0
Middle Lane Group Data								
Assigned Movement	0	2	8	4	0	6	0	0
Lane Assignment		T	T	T		T		
Lanes in Group	0	2	1	1	0	2	0	0
Group Volume (v), veh/h	0.0	1055.8	190.3	216.4	0.0	1234.1	0.0	0.0
Group Sat. Flow (s), veh/h/ln	0.0	1695.1	1862.7	1862.7	0.0	1695.1	0.0	0.0
Queue Serve Time (g_s), s	0.0	34.7	12.0	14.3	0.0	42.4	0.0	0.0
Cycle Queue Clear Time (g_c), s	0.0	34.7	12.0	14.3	0.0	42.4	0.0	0.0
Lane Group Capacity (c), veh/h	0.0	1419.8	367.3	324.9	0.0	1485.1	0.0	0.0
Volume-to-Capacity Ratio (X)	0.000	0.744	0.518	0.666	0.000	0.831	0.000	0.000
Available Capacity (c_a), veh/h	0.0	1419.8	367.3	381.4	0.0	1568.4	0.0	0.0
Upstream Filter Factor (I)	0.000	1.000	1.000	1.000	0.000	1.000	0.000	0.000
Uniform Delay (d1), s/veh	0.0	32.3	47.3	50.8	0.0	32.7	0.0	0.0
Incremental Delay (d2), s/veh	0.0	3.6	1.3	3.5	0.0	3.8	0.0	0.0
Initial Queue Delay (d3), s/veh	0.0	0.0	0.0	0.0	0.0	0.0	0.0	0.0
Control Delay (d), s/veh	0.0	35.9	48.6	54.3	0.0	36.5	0.0	0.0
First-Term Queue (Q1), veh/ln	0.0	14.1	5.6	6.7	0.0	17.2	0.0	0.0
Second-Term Queue (Q2), veh/ln	0.0	0.7	0.1	0.3	0.0	0.8	0.0	0.0
Third-Term Queue (Q3), veh/ln	0.0	0.0	0.0	0.0	0.0	0.0	0.0	0.0
Percentile bk-of-que factor (f_B%)	0.000	1.000	1.000	1.000	0.000	1.000	0.000	0.000
Percentile Back of Queue (Q%), veh/ln	0.0	14.8	5.8	7.0	0.0	18.0	0.0	0.0
Percentile Storage Ratio (RQ%)	0.00	0.82	0.08	0.52	0.00	0.62	0.00	0.00

Initial Queue (Qb), veh	0.0	0.0	0.0	0.0	0.0	0.0	0.0	0.0
Final (Residual) Queue (Qe), veh	0.0	0.0	0.0	0.0	0.0	0.0	0.0	0.0
Saturated Delay (ds), s/veh	0.0	0.0	0.0	0.0	0.0	0.0	0.0	0.0
Saturated Queue (Qs), veh	0.0	0.0	0.0	0.0	0.0	0.0	0.0	0.0
Saturated Capacity (cs), veh/h	0.0	0.0	0.0	0.0	0.0	0.0	0.0	0.0
Initial Queue Clear Time (tc), h	0.0	0.0	0.0	0.0	0.0	0.0	0.0	0.0
Right Lane Group Data								
Assigned Movement	0	12	18	14	0	16	0	0
Lane Assignment		T+R	T+R	T+R		T+R		
Lanes in Group	0	1	1	1	0	1	0	0
Group Volume (v), veh/h	0.0	559.1	188.4	203.8	0.0	642.5	0.0	0.0
Group Sat. Flow (s), veh/h/ln	0.0	1794.7	1833.5	1707.1	0.0	1757.0	0.0	0.0
Queue Serve Time (g_s), s	0.0	34.7	12.1	14.8	0.0	42.7	0.0	0.0
Cycle Queue Clear Time (g_c), s	0.0	34.7	12.1	14.8	0.0	42.7	0.0	0.0
Prot RT Sat Flow Rate (s_R), veh/h/ln	0.0	0.0	0.0	0.0	0.0	0.0	0.0	0.0
Prot RT Eff. Green (g_R), s	0.0	0.0	0.0	0.0	0.0	0.0	0.0	0.0
Proportion RT Outside Lane (P_R)	0.000	0.215	0.090	0.517	0.000	0.341	0.000	0.000
Lane Group Capacity (c), veh/h	0.0	751.6	361.5	297.8	0.0	769.7	0.0	0.0
Volume-to-Capacity Ratio (X)	0.000	0.744	0.521	0.684	0.000	0.835	0.000	0.000
Available Capacity (c_a), veh/h	0.0	751.6	361.5	349.5	0.0	812.8	0.0	0.0
Upstream Filter Factor (I)	0.000	1.000	1.000	1.000	0.000	1.000	0.000	0.000
Uniform Delay (d1), s/veh	0.0	32.3	47.4	51.0	0.0	32.8	0.0	0.0
Incremental Delay (d2), s/veh	0.0	6.6	1.3	4.4	0.0	7.2	0.0	0.0
Initial Queue Delay (d3), s/veh	0.0	0.0	0.0	0.0	0.0	0.0	0.0	0.0
Control Delay (d), s/veh	0.0	38.9	48.7	55.4	0.0	40.1	0.0	0.0
First-Term Queue (Q1), veh/ln	0.0	14.9	5.6	6.3	0.0	17.9	0.0	0.0
Second-Term Queue (Q2), veh/ln	0.0	1.4	0.1	0.4	0.0	1.5	0.0	0.0
Third-Term Queue (Q3), veh/ln	0.0	0.0	0.0	0.0	0.0	0.0	0.0	0.0
Percentile bk-of-que factor (f_B%)	0.000	1.000	1.000	1.000	0.000	1.000	0.000	0.000
Percentile Back of Queue (Q%), veh/ln	0.0	16.3	5.7	6.7	0.0	19.5	0.0	0.0
Percentile Storage Ratio (RQ%)	0.00	0.91	0.08	0.49	0.00	0.67	0.00	0.00
Initial Queue (Qb), veh	0.0	0.0	0.0	0.0	0.0	0.0	0.0	0.0
Final (Residual) Queue (Qe), veh	0.0	0.0	0.0	0.0	0.0	0.0	0.0	0.0
Saturated Delay (ds), s/veh	0.0	0.0	0.0	0.0	0.0	0.0	0.0	0.0
Saturated Queue (Qs), veh	0.0	0.0	0.0	0.0	0.0	0.0	0.0	0.0
Saturated Capacity (cs), veh/h	0.0	0.0	0.0	0.0	0.0	0.0	0.0	0.0
Initial Queue Clear Time (tc), h	0.0	0.0	0.0	0.0	0.0	0.0	0.0	0.0
Intersection Summary								
HCM Average Control Delay		45.3						
HCM Level of Service		D						

Movement	EBL	EBT	EBR	WBL	WBT	WBR	NEL	NET	NER	SWL	SWT	SWR
Lane Configurations												
Volume (veh/h)	33	5	0	0	4	11	58	1866	19	0	0	0
Sign Control		Stop			Stop			Free			Free	
Grade		0%			0%			0%			0%	
Peak Hour Factor	0.95	0.95	0.95	0.95	0.95	0.95	0.95	0.95	0.95	0.95	0.95	0.95
Hourly flow rate (vph)	37	6	0	0	4	12	65	2082	21	0	0	0
Pedestrians												
Lane Width (ft)												
Walking Speed (ft/s)												
Percent Blockage												
Right turn flare (veh)												
Median type								None			None	
Median storage veh)												
Upstream signal (ft)												
pX, platoon unblocked												
vC, conflicting volume	838	2233	0	2225	2222	705	0			2103		
vC1, stage 1 conf vol												
vC2, stage 2 conf vol												
vCu, unblocked vol	838	2233	0	2225	2222	705	0			2103		
tC, single (s)	7.5	6.5	6.9	7.5	6.5	6.9	4.1			4.1		
tC, 2 stage (s)												
tF (s)	3.5	4.0	3.3	3.5	4.0	3.3	2.2			2.2		
p0 queue free %	83	86	100	100	89	97	96			100		
cM capacity (veh/h)	223	40	1084	21	41	379	1622			258		

Direction, Lane #	EB 1	WB 1	NE 1	NE 2	NE 3
Volume Total	42	17	585	1041	542
Volume Left	37	0	65	0	0
Volume Right	0	12	0	0	21
cSH	140	119	1622	1700	1700
Volume to Capacity	0.30	0.14	0.04	0.61	0.32
Queue Length 95th (ft)	30	12	3	0	0
Control Delay (s)	41.5	40.2	1.2	0.0	0.0
Lane LOS	E	E	A		
Approach Delay (s)	41.5	40.2	0.3		
Approach LOS	E	E			

Intersection Summary			
Average Delay	1.4		
Intersection Capacity Utilization	55.5%	ICU Level of Service	B
Analysis Period (min)	15		

Movement	EBL	EBT	EBR	WBL	WBT	WBR	NEL	NET	NER	SWL	SWT	SWR
Lane Configurations												
Volume (veh/h)	0	4	0	0	4	0	2	2038	4	0	0	0
Sign Control		Stop			Stop			Free			Free	
Grade		0%			0%			0%			0%	
Peak Hour Factor	0.89	0.89	0.89	0.89	0.89	0.89	0.89	0.89	0.89	0.89	0.89	0.89
Hourly flow rate (vph)	0	5	0	0	5	0	2	2427	5	0	0	0
Pedestrians												
Lane Width (ft)												
Walking Speed (ft/s)												
Percent Blockage												
Right turn flare (veh)												
Median type								None			None	
Median storage veh)												
Upstream signal (ft)												
pX, platoon unblocked												
vC, conflicting volume	816	2437	0	2437	2434	811	0			2432		
vC1, stage 1 conf vol												
vC2, stage 2 conf vol												
vCu, unblocked vol	816	2437	0	2437	2434	811	0			2432		
tC, single (s)	7.5	6.5	6.9	7.5	6.5	6.9	4.1			4.1		
tC, 2 stage (s)												
tF (s)	3.5	4.0	3.3	3.5	4.0	3.3	2.2			2.2		
p0 queue free %	100	85	100	100	85	100	100			100		
cM capacity (veh/h)	237	31	1084	14	31	322	1622			191		

Direction, Lane #	EB 1	WB 1	NE 1	NE 2	NE 3
Volume Total	5	5	609	1214	612
Volume Left	0	0	2	0	0
Volume Right	0	0	0	0	5
cSH	31	31	1622	1700	1700
Volume to Capacity	0.15	0.15	0.00	0.71	0.36
Queue Length 95th (ft)	12	12	0	0	0
Control Delay (s)	140.5	140.0	0.0	0.0	0.0
Lane LOS	F	F	A		
Approach Delay (s)	140.5	140.0	0.0		
Approach LOS	F	F			

Intersection Summary			
Average Delay	0.6		
Intersection Capacity Utilization	51.9%	ICU Level of Service	A
Analysis Period (min)	15		

HCM Unsignalized Intersection Capacity Analysis
1: SW 97th Ave. & SW 174th St.

2/11/2015

Movement	EBL	EBT	EBR	WBL	WBT	WBR	NBL	NBT	NBR	SBL	SBT	SBR
Lane Configurations												
Sign Control		Stop			Stop			Stop			Stop	
Volume (vph)	5	124	74	61	134	1	56	9	25	3	2	7
Peak Hour Factor	0.90	0.90	0.90	0.90	0.90	0.90	0.90	0.90	0.90	0.90	0.90	0.90
Hourly flow rate (vph)	6	146	87	72	158	1	66	11	29	4	2	8

Direction, Lane #	EB 1	WB 1	NB 1	SB 1
Volume Total (vph)	239	231	106	14
Volume Left (vph)	6	72	66	4
Volume Right (vph)	87	1	29	8
Hadj (s)	-0.18	0.09	-0.01	-0.27
Departure Headway (s)	4.3	4.6	5.0	4.9
Degree Utilization, x	0.29	0.29	0.15	0.02
Capacity (veh/h)	808	756	662	653
Control Delay (s)	9.0	9.4	8.8	8.0
Approach Delay (s)	9.0	9.4	8.8	8.0
Approach LOS	A	A	A	A

Intersection Summary			
Delay	9.1		
HCM Level of Service	A		
Intersection Capacity Utilization	44.9%	ICU Level of Service	A
Analysis Period (min)	15		

Lane Group	EBL	NBT	SBT	NET
Lane Group Flow (vph)	129	322	77	2371
v/c Ratio	0.75	0.62	0.19	0.80
Control Delay	105.4	28.1	60.6	32.3
Queue Delay	0.0	0.0	0.0	0.0
Total Delay	105.4	28.1	60.6	32.3
Queue Length 50th (ft)	154	126	76	792
Queue Length 95th (ft)	235	251	135	915
Internal Link Dist (ft)	257	1041	665	1300
Turn Bay Length (ft)				
Base Capacity (vph)	229	523	398	2981
Starvation Cap Reductn	0	0	0	0
Spillback Cap Reductn	0	0	0	0
Storage Cap Reductn	0	0	0	0
Reduced v/c Ratio	0.56	0.62	0.19	0.80

Intersection Summary

Movement	EBL	EBR	NBL	NBT	NBR	SBT	SBR	NEL2	NEL	NET	NER
Lane Configurations											
Volume (vph)	4	113	7	15	269	47	23	4	19	2085	40
Ideal Flow (vphpl)	1900	1900	1900	1900	1900	1900	1900	1900	1900	1900	1900
Total Lost time (s)	5.0			5.0		5.0				5.0	
Lane Util. Factor	1.00			1.00		1.00				0.91	
Frt	0.87			0.88		0.96				1.00	
Flt Protected	1.00			1.00		1.00				1.00	
Satd. Flow (prot)	1617			1629		1781				5068	
Flt Permitted	1.00			0.99		1.00				1.00	
Satd. Flow (perm)	1617			1621		1781				5068	
Peak-hour factor, PHF	0.96	0.96	0.96	0.96	0.96	0.96	0.96	0.96	0.96	0.96	0.96
Growth Factor (vph)	106%	106%	106%	106%	106%	106%	106%	106%	106%	106%	106%
Adj. Flow (vph)	4	125	8	17	297	52	25	4	21	2302	44
RTOR Reduction (vph)	0	0	0	161	0	0	0	0	0	1	0
Lane Group Flow (vph)	129	0	0	161	0	77	0	0	0	2370	0
Parking (#/hr)		0									
Turn Type	NA		Perm	NA		NA		Perm	Perm	NA	
Protected Phases	3			4		8				6	
Permitted Phases			4					6	6		
Actuated Green, G (s)	19.6			41.0		41.0				108.1	
Effective Green, g (s)	19.6			41.0		41.0				108.1	
Actuated g/C Ratio	0.11			0.22		0.22				0.59	
Clearance Time (s)	5.0			5.0		5.0				5.0	
Vehicle Extension (s)	3.0			3.0		3.0				3.0	
Lane Grp Cap (vph)	173			362		398				2982	
v/s Ratio Prot	c0.08					0.04					
v/s Ratio Perm				c0.10						0.47	
v/c Ratio	0.75			0.45		0.19				0.79	
Uniform Delay, d1	79.6			61.5		57.9				29.2	
Progression Factor	1.00			1.00		1.00				1.00	
Incremental Delay, d2	16.0			3.9		1.1				2.3	
Delay (s)	95.6			65.5		59.0				31.5	
Level of Service	F			E		E				C	
Approach Delay (s)	95.6			65.5		59.0				31.5	
Approach LOS	F			E		E				C	

Intersection Summary			
HCM Average Control Delay	38.9	HCM Level of Service	D
HCM Volume to Capacity ratio	0.70		
Actuated Cycle Length (s)	183.7	Sum of lost time (s)	15.0
Intersection Capacity Utilization	89.6%	ICU Level of Service	E
Analysis Period (min)	15		
c Critical Lane Group			

Movement	EBL	EBR	NBL	NBT	SBT	SBR
Lane Configurations						
Volume (veh/h)	5	74	19	269	203	9
Sign Control	Stop			Free	Free	
Grade	0%			0%	0%	
Peak Hour Factor	0.92	0.92	0.92	0.92	0.92	0.92
Hourly flow rate (vph)	6	85	22	310	234	10
Pedestrians						
Lane Width (ft)						
Walking Speed (ft/s)						
Percent Blockage						
Right turn flare (veh)						
Median type				None	None	
Median storage veh)						
Upstream signal (ft)					1121	
pX, platoon unblocked						
vC, conflicting volume	593	239	244			
vC1, stage 1 conf vol						
vC2, stage 2 conf vol						
vCu, unblocked vol	593	239	244			
tC, single (s)	6.4	6.2	4.1			
tC, 2 stage (s)						
tF (s)	3.5	3.3	2.2			
p0 queue free %	99	89	98			
cM capacity (veh/h)	461	800	1322			

Direction, Lane #	EB 1	NB 1	SB 1
Volume Total	91	332	244
Volume Left	6	22	0
Volume Right	85	0	10
cSH	764	1322	1700
Volume to Capacity	0.12	0.02	0.14
Queue Length 95th (ft)	10	1	0
Control Delay (s)	10.3	0.7	0.0
Lane LOS	B	A	
Approach Delay (s)	10.3	0.7	0.0
Approach LOS	B		

Intersection Summary			
Average Delay	1.7		
Intersection Capacity Utilization	43.2%	ICU Level of Service	A
Analysis Period (min)	15		

Movement	WBL	WBR	NBT	NBR	SBL	SBT
Lane Configurations						
Volume (veh/h)	49	47	261	36	26	240
Sign Control	Stop		Free			Free
Grade	0%		0%			0%
Peak Hour Factor	0.94	0.94	0.94	0.94	0.94	0.94
Hourly flow rate (vph)	55	53	294	41	29	271
Pedestrians						
Lane Width (ft)						
Walking Speed (ft/s)						
Percent Blockage						
Right turn flare (veh)						
Median type			None			None
Median storage veh)						
Upstream signal (ft)						
pX, platoon unblocked						
vC, conflicting volume	644	315			335	
vC1, stage 1 conf vol						
vC2, stage 2 conf vol						
vCu, unblocked vol	644	315			335	
tC, single (s)	6.4	6.2			4.1	
tC, 2 stage (s)						
tF (s)	3.5	3.3			2.2	
p0 queue free %	87	93			98	
cM capacity (veh/h)	427	726			1224	

Direction, Lane #	WB 1	NB 1	SB 1
Volume Total	108	335	300
Volume Left	55	0	29
Volume Right	53	41	0
cSH	535	1700	1224
Volume to Capacity	0.20	0.20	0.02
Queue Length 95th (ft)	19	0	2
Control Delay (s)	13.4	0.0	1.0
Lane LOS	B		A
Approach Delay (s)	13.4	0.0	1.0
Approach LOS	B		

Intersection Summary			
Average Delay	2.4		
Intersection Capacity Utilization	47.7%	ICU Level of Service	A
Analysis Period (min)	15		

Movement	EBL	EBR	NBL	NBT	SBT	SBR
Lane Configurations						
Volume (veh/h)	5	46	14	312	295	4
Sign Control	Stop			Free	Free	
Grade	0%			0%	0%	
Peak Hour Factor	0.93	0.93	0.93	0.93	0.93	0.93
Hourly flow rate (vph)	6	52	16	356	336	5
Pedestrians						
Lane Width (ft)						
Walking Speed (ft/s)						
Percent Blockage						
Right turn flare (veh)						
Median type				None	None	
Median storage veh)						
Upstream signal (ft)				1230		
pX, platoon unblocked	0.88					
vC, conflicting volume	726	339	341			
vC1, stage 1 conf vol						
vC2, stage 2 conf vol						
vCu, unblocked vol	621	339	341			
tC, single (s)	6.4	6.2	4.1			
tC, 2 stage (s)						
tF (s)	3.5	3.3	2.2			
p0 queue free %	99	93	99			
cM capacity (veh/h)	392	704	1218			

Direction, Lane #	EB 1	NB 1	SB 1
Volume Total	58	372	341
Volume Left	6	16	0
Volume Right	52	0	5
cSH	653	1218	1700
Volume to Capacity	0.09	0.01	0.20
Queue Length 95th (ft)	7	1	0
Control Delay (s)	11.1	0.5	0.0
Lane LOS	B	A	
Approach Delay (s)	11.1	0.5	0.0
Approach LOS	B		

Intersection Summary			
Average Delay	1.1		
Intersection Capacity Utilization	39.5%	ICU Level of Service	A
Analysis Period (min)	15		

Movement	EBL	EBT	EBR	WBL	WBT	WBR	NBL	NBT	NBR	SBL	SBT	SBR
Lane Configurations												
Volume (veh/h)	5	4	26	7	1	12	4	329	2	4	355	7
Sign Control		Stop			Stop			Free			Free	
Grade		0%			0%			0%			0%	
Peak Hour Factor	0.87	0.87	0.87	0.87	0.87	0.87	0.87	0.87	0.87	0.87	0.87	0.87
Hourly flow rate (vph)	6	5	32	9	1	15	5	401	2	5	433	9
Pedestrians												
Lane Width (ft)												
Walking Speed (ft/s)												
Percent Blockage												
Right turn flare (veh)												
Median type								None			None	
Median storage veh)												
Upstream signal (ft)								904				
pX, platoon unblocked	0.86	0.86		0.86	0.86	0.86				0.86		
vC, conflicting volume	874	860	437	892	863	402	441			403		
vC1, stage 1 conf vol												
vC2, stage 2 conf vol												
vCu, unblocked vol	769	753	437	791	756	219	441			220		
tC, single (s)	7.1	6.5	6.2	7.1	6.5	6.2	4.1			4.1		
tC, 2 stage (s)												
tF (s)	3.5	4.0	3.3	3.5	4.0	3.3	2.2			2.2		
p0 queue free %	98	98	95	97	100	98	100			100		
cM capacity (veh/h)	264	288	620	245	287	704	1119			1156		

Direction, Lane #	EB 1	WB 1	NB 1	SB 1
Volume Total	43	24	408	446
Volume Left	6	9	5	5
Volume Right	32	15	2	9
cSH	468	407	1119	1156
Volume to Capacity	0.09	0.06	0.00	0.00
Queue Length 95th (ft)	7	5	0	0
Control Delay (s)	13.5	14.4	0.1	0.1
Lane LOS	B	B	A	A
Approach Delay (s)	13.5	14.4	0.1	0.1
Approach LOS	B	B		

Intersection Summary			
Average Delay	1.1		
Intersection Capacity Utilization	32.8%	ICU Level of Service	A
Analysis Period (min)	15		

Movement	EBL	EBT	EBR	WBL	WBT	WBR	NBL	NBT	NBR	SBL	SBT	SBR
Lane Configurations												
Volume (veh/h)	1	0	2	0	0	0	1	346	0	2	399	2
Sign Control		Stop			Stop			Free			Free	
Grade		0%			0%			0%			0%	
Peak Hour Factor	0.91	0.91	0.91	0.91	0.91	0.91	0.91	0.91	0.91	0.91	0.91	0.91
Hourly flow rate (vph)	1	0	2	0	0	0	1	403	0	2	465	2
Pedestrians												
Lane Width (ft)												
Walking Speed (ft/s)												
Percent Blockage												
Right turn flare (veh)												
Median type								None			None	
Median storage veh)												
Upstream signal (ft)								601				
pX, platoon unblocked	0.86	0.86		0.86	0.86	0.86				0.86		
vC, conflicting volume	876	876	466	878	877	403	467			403		
vC1, stage 1 conf vol												
vC2, stage 2 conf vol												
vCu, unblocked vol	776	776	466	778	777	227	467			227		
tC, single (s)	7.1	6.5	6.2	7.1	6.5	6.2	4.1			4.1		
tC, 2 stage (s)												
tF (s)	3.5	4.0	3.3	3.5	4.0	3.3	2.2			2.2		
p0 queue free %	100	100	100	100	100	100	100			100		
cM capacity (veh/h)	271	282	597	268	282	700	1094			1156		

Direction, Lane #	EB 1	WB 1	NB 1	SB 1
Volume Total	3	0	404	469
Volume Left	1	0	1	2
Volume Right	2	0	0	2
cSH	426	1700	1094	1156
Volume to Capacity	0.01	0.00	0.00	0.00
Queue Length 95th (ft)	1	0	0	0
Control Delay (s)	13.5	0.0	0.0	0.1
Lane LOS	B	A	A	A
Approach Delay (s)	13.5	0.0	0.0	0.1
Approach LOS	B	A		

Intersection Summary			
Average Delay	0.1		
Intersection Capacity Utilization	33.9%	ICU Level of Service	A
Analysis Period (min)	15		

Movement	EBL	EBT	EBR	WBL	WBT	WBR	NBL	NBT	NBR	SBL	SBT	SBR
Lane Configurations												
Volume (veh/h)	7	1	61	2	2	2	9	337	1	3	393	1
Sign Control		Stop			Stop			Free			Free	
Grade		0%			0%			0%			0%	
Peak Hour Factor	0.93	0.93	0.93	0.93	0.93	0.93	0.93	0.93	0.93	0.93	0.93	0.93
Hourly flow rate (vph)	8	1	70	2	2	2	10	384	1	3	448	1
Pedestrians												
Lane Width (ft)												
Walking Speed (ft/s)												
Percent Blockage												
Right turn flare (veh)												
Median type								None			None	
Median storage veh)												
Upstream signal (ft)								300				
pX, platoon unblocked	0.87	0.87		0.87	0.87	0.87				0.87		
vC, conflicting volume	864	861	449	931	861	385	449			385		
vC1, stage 1 conf vol												
vC2, stage 2 conf vol												
vCu, unblocked vol	769	765	449	845	765	218	449			218		
tC, single (s)	7.1	6.5	6.2	7.1	6.5	6.2	4.1			4.1		
tC, 2 stage (s)												
tF (s)	3.5	4.0	3.3	3.5	4.0	3.3	2.2			2.2		
p0 queue free %	97	100	89	99	99	100	99			100		
cM capacity (veh/h)	272	286	610	215	286	715	1111			1175		

Direction, Lane #	EB 1	WB 1	NB 1	SB 1
Volume Total	79	7	396	452
Volume Left	8	2	10	3
Volume Right	70	2	1	1
cSH	534	314	1111	1175
Volume to Capacity	0.15	0.02	0.01	0.00
Queue Length 95th (ft)	13	2	1	0
Control Delay (s)	12.9	16.7	0.3	0.1
Lane LOS	B	C	A	A
Approach Delay (s)	12.9	16.7	0.3	0.1
Approach LOS	B	C		

Intersection Summary			
Average Delay	1.4		
Intersection Capacity Utilization	36.5%	ICU Level of Service	A
Analysis Period (min)	15		

Lane Group	EBL	EBT	EBR	WBL	WBT	NBL	NBT	SBL	SBT
Lane Group Flow (vph)	40	502	184	211	600	156	430	37	519
v/c Ratio	0.08	0.78	0.33	0.49	0.45	0.43	0.55	0.09	0.66
Control Delay	16.1	49.5	16.0	20.9	34.8	34.3	49.4	30.5	55.2
Queue Delay	0.0	0.0	0.0	0.0	0.0	0.0	0.0	0.0	0.0
Total Delay	16.1	49.5	16.0	20.9	34.8	34.3	49.4	30.5	55.2
Queue Length 50th (ft)	16	355	42	94	218	91	158	20	223
Queue Length 95th (ft)	38	556	116	160	316	181	267	54	356
Internal Link Dist (ft)		1915			422		229		156
Turn Bay Length (ft)	130			95		155		130	
Base Capacity (vph)	563	933	788	481	1876	370	944	467	951
Starvation Cap Reductn	0	0	0	0	0	0	0	0	0
Spillback Cap Reductn	0	0	0	0	0	0	0	0	0
Storage Cap Reductn	0	0	0	0	0	0	0	0	0
Reduced v/c Ratio	0.07	0.54	0.23	0.44	0.32	0.42	0.46	0.08	0.55

Intersection Summary

Movement	EBL	EBT	EBR	WBL	WBT	WBR	NBL	NBT	NBR	SBL	SBT	SBR
Lane Configurations												
Volume (vph)	35	436	160	183	510	10	135	283	90	32	409	42
Ideal Flow (vphpl)	1900	1900	1900	1900	1900	1900	1900	1900	1900	1900	1900	1900
Total Lost time (s)	3.0	3.0	5.0	3.0	3.0		3.0	3.0		3.0	3.0	
Lane Util. Factor	1.00	1.00	1.00	1.00	0.95		1.00	0.95		1.00	0.95	
Frt	1.00	1.00	0.85	1.00	1.00		1.00	0.96		1.00	0.99	
Flt Protected	0.95	1.00	1.00	0.95	1.00		0.95	1.00		0.95	1.00	
Satd. Flow (prot)	1770	1863	1583	1770	3529		1770	3411		1770	3490	
Flt Permitted	0.35	1.00	1.00	0.28	1.00		0.26	1.00		0.50	1.00	
Satd. Flow (perm)	645	1863	1583	517	3529		489	3411		934	3490	
Peak-hour factor, PHF	0.92	0.92	0.92	0.92	0.92	0.92	0.92	0.92	0.92	0.92	0.92	0.92
Growth Factor (vph)	106%	106%	106%	106%	106%	106%	106%	106%	106%	106%	106%	106%
Adj. Flow (vph)	40	502	184	211	588	12	156	326	104	37	471	48
RTOR Reduction (vph)	0	0	85	0	1	0	0	17	0	0	4	0
Lane Group Flow (vph)	40	502	99	211	599	0	156	413	0	37	515	0
Turn Type	pm+pt	NA	custom	pm+pt	NA		custom	NA		custom	NA	
Protected Phases	1 2	2 4		1 3	3 4		5 6	6 8		5 7	7 8	
Permitted Phases	2 4		4	3 4			8			8		
Actuated Green, G (s)	63.3	45.7	41.5	61.3	49.7		44.1	27.8		39.7	29.4	
Effective Green, g (s)	63.3	45.7	41.5	61.3	49.7		44.1	27.8		39.7	29.4	
Actuated g/C Ratio	0.46	0.33	0.30	0.44	0.36		0.32	0.20		0.29	0.21	
Clearance Time (s)			5.0									
Vehicle Extension (s)			3.0									
Lane Grp Cap (vph)	472	615	475	408	1267		355	685		371	741	
v/s Ratio Prot	0.01	c0.27		c0.07	c0.17		c0.07	0.12		0.01	c0.15	
v/s Ratio Perm	0.03		0.06	0.15			0.07			0.02		
v/c Ratio	0.08	0.82	0.21	0.52	0.47		0.44	0.60		0.10	0.70	
Uniform Delay, d1	21.1	42.5	36.2	25.8	34.2		35.6	50.3		35.9	50.4	
Progression Factor	1.00	1.00	1.00	1.00	1.00		1.00	1.00		1.00	1.00	
Incremental Delay, d2	0.1	8.2	0.2	1.1	0.3		0.9	1.5		0.1	2.8	
Delay (s)	21.1	50.7	36.4	26.9	34.5		36.5	51.8		36.1	53.2	
Level of Service	C	D	D	C	C		D	D		D	D	
Approach Delay (s)		45.5			32.5			47.7			52.1	
Approach LOS		D			C			D			D	

Intersection Summary			
HCM Average Control Delay	43.4	HCM Level of Service	D
HCM Volume to Capacity ratio	0.64		
Actuated Cycle Length (s)	138.4	Sum of lost time (s)	18.0
Intersection Capacity Utilization	69.7%	ICU Level of Service	C
Analysis Period (min)	15		

c Critical Lane Group

Movement	EBL	EBT	WBT	WBR	SBL	SBR
Lane Configurations						
Volume (veh/h)	4	582	718	9	5	1
Sign Control		Free	Free		Stop	
Grade		0%	0%		0%	
Peak Hour Factor	0.96	0.96	0.96	0.96	0.96	0.96
Hourly flow rate (vph)	4	643	793	10	6	1
Pedestrians						
Lane Width (ft)						
Walking Speed (ft/s)						
Percent Blockage						
Right turn flare (veh)						
Median type		None	None			
Median storage veh)						
Upstream signal (ft)		502				
pX, platoon unblocked					0.75	
vC, conflicting volume	803				1449	798
vC1, stage 1 conf vol						
vC2, stage 2 conf vol						
vCu, unblocked vol	803				1432	798
tC, single (s)	4.1				6.4	6.2
tC, 2 stage (s)						
tF (s)	2.2				3.5	3.3
p0 queue free %	99				95	100
cM capacity (veh/h)	821				110	386

Direction, Lane #	EB 1	EB 2	WB 1	SB 1
Volume Total	4	643	803	7
Volume Left	4	0	0	6
Volume Right	0	0	10	1
cSH	821	1700	1700	125
Volume to Capacity	0.01	0.38	0.47	0.05
Queue Length 95th (ft)	0	0	0	4
Control Delay (s)	9.4	0.0	0.0	35.5
Lane LOS	A			E
Approach Delay (s)	0.1		0.0	35.5
Approach LOS				E

Intersection Summary			
Average Delay	0.2		
Intersection Capacity Utilization	50.6%	ICU Level of Service	A
Analysis Period (min)	15		

Lane Group	EBL	EBT	WBL	WBT	NBL	NBT	SBL	SBT
Lane Group Flow (vph)	214	525	233	480	84	1739	221	2341
v/c Ratio	0.73	0.90	0.85	0.85	0.67	0.78	0.88	0.90
Control Delay	88.4	93.5	100.7	87.9	62.1	45.8	88.3	45.8
Queue Delay	0.0	0.0	0.0	0.0	0.0	0.0	0.0	0.0
Total Delay	88.4	93.5	100.7	87.9	62.1	45.8	88.3	45.8
Queue Length 50th (ft)	255	336	309	318	51	678	219	965
Queue Length 95th (ft)	361	#438	#453	392	#137	747	#368	1040
Internal Link Dist (ft)		364		1915		469		768
Turn Bay Length (ft)			286		160		130	
Base Capacity (vph)	313	620	311	646	130	2228	275	2659
Starvation Cap Reductn	0	0	0	0	0	0	0	0
Spillback Cap Reductn	0	0	0	0	0	0	0	0
Storage Cap Reductn	0	0	0	0	0	0	0	0
Reduced v/c Ratio	0.68	0.85	0.75	0.74	0.65	0.78	0.80	0.88

Intersection Summary

95th percentile volume exceeds capacity, queue may be longer.
Queue shown is maximum after two cycles.

Movement	EBL	EBT	EBR	WBL	WBT	WBR	NBL	NBT	NBR	SBL	SBT	SBR
Lane Configurations												
Volume (vph)	186	405	50	306	301	11	73	1202	307	192	1801	231
Ideal Flow (vphpl)	1900	1900	1900	1900	1900	1900	1900	1900	1900	1900	1900	1900
Total Lost time (s)	5.0	5.0		5.0	5.0		3.0	5.0		3.0	5.0	
Lane Util. Factor	1.00	0.95		0.91	0.91		1.00	0.91		1.00	0.91	
Frt	1.00	0.98		1.00	1.00		1.00	0.97		1.00	0.98	
Flt Protected	0.95	1.00		0.95	0.99		0.95	1.00		0.95	1.00	
Satd. Flow (prot)	1770	3481		1610	3335		1770	4930		1770	4999	
Flt Permitted	0.95	1.00		0.95	0.99		0.05	1.00		0.05	1.00	
Satd. Flow (perm)	1770	3481		1610	3335		92	4930		88	4999	
Peak-hour factor, PHF	0.92	0.92	0.92	0.92	0.92	0.92	0.92	0.92	0.92	0.92	0.92	0.92
Growth Factor (vph)	106%	106%	106%	106%	106%	106%	106%	106%	106%	106%	106%	106%
Adj. Flow (vph)	214	467	58	353	347	13	84	1385	354	221	2075	266
RTOR Reduction (vph)	0	5	0	0	1	0	0	23	0	0	8	0
Lane Group Flow (vph)	214	520	0	233	479	0	84	1716	0	221	2333	0
Turn Type	Split	NA		Split	NA		pm+pt	NA		pm+pt	NA	
Protected Phases	4	4		8	8		5	2		1	6	
Permitted Phases							2			6		
Actuated Green, G (s)	30.1	30.1		30.9	30.9		89.8	81.3		105.7	94.2	
Effective Green, g (s)	30.1	30.1		30.9	30.9		89.8	81.3		105.7	94.2	
Actuated g/C Ratio	0.17	0.17		0.17	0.17		0.49	0.45		0.58	0.52	
Clearance Time (s)	5.0	5.0		5.0	5.0		3.0	5.0		3.0	5.0	
Vehicle Extension (s)	3.0	3.0		3.0	3.0		3.0	3.0		3.0	3.0	
Lane Grp Cap (vph)	293	577		274	567		124	2206		249	2592	
v/s Ratio Prot	0.12	c0.15		c0.14	0.14		0.03	0.35		c0.10	c0.47	
v/s Ratio Perm							0.30			0.41		
v/c Ratio	0.73	0.90		0.85	0.85		0.68	0.78		0.89	0.90	
Uniform Delay, d1	71.9	74.3		73.2	73.1		37.8	42.6		60.0	39.5	
Progression Factor	1.00	1.00		1.00	1.00		1.00	1.00		1.00	1.00	
Incremental Delay, d2	9.0	17.2		21.5	11.1		13.7	2.8		29.2	4.7	
Delay (s)	81.0	91.6		94.7	84.2		51.6	45.3		89.2	44.2	
Level of Service	F	F		F	F		D	D		F	D	
Approach Delay (s)		88.5			87.6			45.6			48.1	
Approach LOS		F			F			D			D	

Intersection Summary			
HCM Average Control Delay	57.3	HCM Level of Service	E
HCM Volume to Capacity ratio	0.88		
Actuated Cycle Length (s)	181.7	Sum of lost time (s)	13.0
Intersection Capacity Utilization	88.4%	ICU Level of Service	E
Analysis Period (min)	15		

c Critical Lane Group

Movement	EBL	EBT	EBR	WBL	WBT	WBR	NBL	NBT	NBR	SBL	SBT	SBR
Lane Configurations												
Volume (vph)	186	405	50	306	301	11	73	1202	307	192	1801	231
Movement Number	7	4	14	3	8	18	5	2	12	1	6	16
Initial Queue, veh	0	0	0	0	0	0	0	0	0	0	0	0
Ped-Bike Adj. Factor (A_pbT)	1.00		1.00	1.00		1.00	1.00		1.00	1.00		1.00
Parking, Bus Adj. Factors	1.00	1.00	1.00	1.00	1.00	1.00	1.00	1.00	1.00	1.00	1.00	1.00
Adj. Sat. Flow Rate, veh/h/ln	1863	1863	1863	1863	1863	1863	1863	1863	1863	1863	1863	1863
Lanes	1	2	0	1	2	0	1	3	0	1	3	0
Lane Assignment												
Capacity, veh/h	272	499	61	351	708	26	126	1924	491	232	2336	296
Proportion Arriving On Green	0.15	0.15	0.15	0.20	0.20	0.20	0.03	0.48	0.48	0.07	0.51	0.51
Movement Delay, s/veh	77.5	91.4	93.4	102.4	62.4	62.4	43.2	37.5	39.9	51.2	39.4	43.3
Movement LOS	E	F	F	F	E	E	D	D	D	D	D	D
Approach Volume, veh/h		697			672			1720			2417	
Approach Delay, s/veh		88.1			82.2			38.5			41.7	
Approach LOS		F			F			D			D	

Timer:	1	2	3	4	5	6	7	8
Assigned Phase	1	2	8	4	5	6		
Case No	1.1	4.0	10.0	10.0	1.1	4.0		
Phase Duration (G+Y+Rc), s	14.96	87.70	39.40	31.62	8.89	93.77		
Change Period (Y+Rc), s	3.00	5.00	5.00	5.00	3.00	5.00		
Max. Allowable Headway (MAH), s	4.00	3.96	3.96	3.96	4.00	3.96		
Maximum Green Setting (Gmax), s	24.00	81.00	35.00	32.00	9.00	96.00		
Max. Queue Clearance Time (g_c+I1), s	11.46	45.56	34.14	25.14	5.98	66.84		
Green Extension Time (g_e), s	0.50	26.92	0.26	1.48	0.04	21.93		
Probability of Phase Call (p_c)	1.000	1.000	1.000	1.000	0.978	1.000		
Probability of Max Out (p_x)	0.002	0.712	1.000	0.399	1.000	0.762		

Left-Turn Movement Data					
Assigned Movement	1		3	7	5
Mvmt. Sat Flow, veh/h	1774.04		1774.04	1774.04	1774.04

Through Movement Data					
Assigned Movement		2	8	4	6
Mvmt. Sat Flow, veh/h		4040.41	3572.32	3255.17	4570.65

Right-Turn Movement Data					
Assigned Movement		12	18	14	16
Mvmt. Sat Flow, veh/h		1030.65	130.19	399.77	579.95

Left Lane Group Data								
Assigned Movement	1	0	3	7	5	0	0	0
Lane Assignment	L (Pr/Pm)		L	LL (Pr/Pm)				
Lanes in Group	1	0	1	1	1	0	0	0
Group Volume (v), veh/h	208.7	0.0	332.6	202.2	79.3	0.0	0.0	0.0
Group Sat. Flow (s), veh/h/ln	1774.0	0.0	1774.0	1774.0	1774.0	0.0	0.0	0.0
Queue Serve Time (g_s), s	9.5	0.0	32.1	18.9	4.0	0.0	0.0	0.0
Cycle Queue Clear Time (g_c), s	9.5	0.0	32.1	18.9	4.0	0.0	0.0	0.0

Perm LT Sat Flow Rate (s_l), veh/h/ln	304.4	0.0	1774.0	1774.0	174.6	0.0	0.0	0.0
Shared LT Sat Flow (s_sh), veh/h/ln	0.0	0.0	0.0	0.0	0.0	0.0	0.0	0.0
Perm LT Eff. Green (g_p), s	90.8	0.0	0.0	0.0	82.7	0.0	0.0	0.0
Perm LT Serve Time (g_u), s	39.1	0.0	0.0	0.0	23.9	0.0	0.0	0.0
Perm LT Que Serve Time (g_ps), s	39.1	0.0	0.0	0.0	23.9	0.0	0.0	0.0
Time to First Blk (g_f), s	0.0	0.0	0.0	0.0	0.0	0.0	0.0	0.0
Serve Time pre Blk (g_fs), s	0.0	0.0	0.0	0.0	0.0	0.0	0.0	0.0
Proportion LT Inside Lane (P_L)	1.000	0.000	1.000	1.000	1.000	0.000	0.000	0.000
Lane Group Capacity (c), veh/h	232.2	0.0	351.4	271.9	125.7	0.0	0.0	0.0
Volume-to-Capacity Ratio (X)	0.899	0.000	0.947	0.744	0.631	0.000	0.000	0.000
Available Capacity (c_a), veh/h	355.2	0.0	357.5	326.9	157.4	0.0	0.0	0.0
Upstream Filter Factor (I)	1.000	0.000	1.000	1.000	1.000	0.000	0.000	0.000
Uniform Delay (d1), s/veh	33.7	0.0	68.7	70.3	37.9	0.0	0.0	0.0
Incremental Delay (d2), s/veh	17.5	0.0	33.7	7.3	5.3	0.0	0.0	0.0
Initial Queue Delay (d3), s/veh	0.0	0.0	0.0	0.0	0.0	0.0	0.0	0.0
Control Delay (d), s/veh	51.2	0.0	102.4	77.5	43.2	0.0	0.0	0.0
First-Term Queue (Q1), veh/ln	5.3	0.0	14.7	8.7	1.8	0.0	0.0	0.0
Second-Term Queue (Q2), veh/ln	1.1	0.0	3.3	0.5	0.2	0.0	0.0	0.0
Third-Term Queue (Q3), veh/ln	0.0	0.0	0.0	0.0	0.0	0.0	0.0	0.0
Percentile bk-of-que factor (f_B%)	1.000	0.000	1.000	1.000	1.000	0.000	0.000	0.000
Percentile Back of Queue (Q%), veh/ln	6.4	0.0	17.9	9.2	2.0	0.0	0.0	0.0
Percentile Storage Ratio (RQ%)	1.25	0.00	1.59	0.68	0.32	0.00	0.00	0.00
Initial Queue (Qb), veh	0.0	0.0	0.0	0.0	0.0	0.0	0.0	0.0
Final (Residual) Queue (Qe), veh	0.0	0.0	0.0	0.0	0.0	0.0	0.0	0.0
Saturated Delay (ds), s/veh	0.0	0.0	0.0	0.0	0.0	0.0	0.0	0.0
Saturated Queue (Qs), veh	0.0	0.0	0.0	0.0	0.0	0.0	0.0	0.0
Saturated Capacity (cs), veh/h	0.0	0.0	0.0	0.0	0.0	0.0	0.0	0.0
Initial Queue Clear Time (tc), h	0.0	0.0	0.0	0.0	0.0	0.0	0.0	0.0
Middle Lane Group Data								
Assigned Movement	0	2	8	4	0	6	0	0
Lane Assignment		T	T	T		T		
Lanes in Group	0	2	1	1	0	2	0	0
Group Volume (v), veh/h	0.0	1096.0	170.2	250.9	0.0	1446.5	0.0	0.0
Group Sat. Flow (s), veh/h/ln	0.0	1695.1	1862.7	1862.7	0.0	1695.1	0.0	0.0
Queue Serve Time (g_s), s	0.0	43.5	14.0	22.9	0.0	63.2	0.0	0.0
Cycle Queue Clear Time (g_c), s	0.0	43.5	14.0	22.9	0.0	63.2	0.0	0.0
Lane Group Capacity (c), veh/h	0.0	1614.2	368.9	285.5	0.0	1732.7	0.0	0.0
Volume-to-Capacity Ratio (X)	0.000	0.679	0.461	0.879	0.000	0.835	0.000	0.000
Available Capacity (c_a), veh/h	0.0	1614.2	375.4	343.2	0.0	1873.8	0.0	0.0
Upstream Filter Factor (I)	0.000	1.000	1.000	1.000	0.000	1.000	0.000	0.000
Uniform Delay (d1), s/veh	0.0	35.2	61.5	72.0	0.0	36.2	0.0	0.0
Incremental Delay (d2), s/veh	0.0	2.3	0.9	19.5	0.0	3.2	0.0	0.0
Initial Queue Delay (d3), s/veh	0.0	0.0	0.0	0.0	0.0	0.0	0.0	0.0
Control Delay (d), s/veh	0.0	37.5	62.4	91.4	0.0	39.4	0.0	0.0
First-Term Queue (Q1), veh/ln	0.0	18.1	6.7	11.0	0.0	26.1	0.0	0.0
Second-Term Queue (Q2), veh/ln	0.0	0.5	0.1	1.5	0.0	0.8	0.0	0.0
Third-Term Queue (Q3), veh/ln	0.0	0.0	0.0	0.0	0.0	0.0	0.0	0.0
Percentile bk-of-que factor (f_B%)	0.000	1.000	1.000	1.000	0.000	1.000	0.000	0.000
Percentile Back of Queue (Q%), veh/ln	0.0	18.7	6.8	12.6	0.0	26.9	0.0	0.0
Percentile Storage Ratio (RQ%)	0.00	1.04	0.09	0.92	0.00	0.93	0.00	0.00

Initial Queue (Qb), veh	0.0	0.0	0.0	0.0	0.0	0.0	0.0	0.0
Final (Residual) Queue (Qe), veh	0.0	0.0	0.0	0.0	0.0	0.0	0.0	0.0
Saturated Delay (ds), s/veh	0.0	0.0	0.0	0.0	0.0	0.0	0.0	0.0
Saturated Queue (Qs), veh	0.0	0.0	0.0	0.0	0.0	0.0	0.0	0.0
Saturated Capacity (cs), veh/h	0.0	0.0	0.0	0.0	0.0	0.0	0.0	0.0
Initial Queue Clear Time (tc), h	0.0	0.0	0.0	0.0	0.0	0.0	0.0	0.0

Right Lane Group Data								
Assigned Movement	0	12	18	14	0	16	0	0
Lane Assignment		T+R	T+R	T+R		T+R		
Lanes in Group	0	1	1	1	0	1	0	0
Group Volume (v), veh/h	0.0	544.2	169.0	243.6	0.0	762.2	0.0	0.0
Group Sat. Flow (s), veh/h/ln	0.0	1680.9	1839.8	1792.2	0.0	1760.4	0.0	0.0
Queue Serve Time (g_s), s	0.0	43.6	14.1	23.1	0.0	64.8	0.0	0.0
Cycle Queue Clear Time (g_c), s	0.0	43.6	14.1	23.1	0.0	64.8	0.0	0.0
Prot RT Sat Flow Rate (s_R), veh/h/ln	0.0	0.0	0.0	0.0	0.0	0.0	0.0	0.0
Prot RT Eff. Green (g_R), s	0.0	0.0	0.0	0.0	0.0	0.0	0.0	0.0
Proportion RT Outside Lane (P_R)	0.000	0.613	0.071	0.223	0.000	0.329	0.000	0.000
Lane Group Capacity (c), veh/h	0.0	800.3	364.4	274.7	0.0	899.7	0.0	0.0
Volume-to-Capacity Ratio (X)	0.000	0.680	0.464	0.887	0.000	0.847	0.000	0.000
Available Capacity (c_a), veh/h	0.0	800.3	370.7	330.2	0.0	973.0	0.0	0.0
Upstream Filter Factor (I)	0.000	1.000	1.000	1.000	0.000	1.000	0.000	0.000
Uniform Delay (d1), s/veh	0.0	35.2	61.5	72.1	0.0	36.6	0.0	0.0
Incremental Delay (d2), s/veh	0.0	4.6	0.9	21.3	0.0	6.7	0.0	0.0
Initial Queue Delay (d3), s/veh	0.0	0.0	0.0	0.0	0.0	0.0	0.0	0.0
Control Delay (d), s/veh	0.0	39.9	62.4	93.4	0.0	43.3	0.0	0.0
First-Term Queue (Q1), veh/ln	0.0	18.0	6.7	10.7	0.0	27.8	0.0	0.0
Second-Term Queue (Q2), veh/ln	0.0	1.0	0.1	1.6	0.0	1.7	0.0	0.0
Third-Term Queue (Q3), veh/ln	0.0	0.0	0.0	0.0	0.0	0.0	0.0	0.0
Percentile bk-of-que factor (f_B%)	0.000	1.000	1.000	1.000	0.000	1.000	0.000	0.000
Percentile Back of Queue (Q%), veh/ln	0.0	19.0	6.8	12.3	0.0	29.5	0.0	0.0
Percentile Storage Ratio (RQ%)	0.00	1.06	0.09	0.91	0.00	1.02	0.00	0.00
Initial Queue (Qb), veh	0.0	0.0	0.0	0.0	0.0	0.0	0.0	0.0
Final (Residual) Queue (Qe), veh	0.0	0.0	0.0	0.0	0.0	0.0	0.0	0.0
Saturated Delay (ds), s/veh	0.0	0.0	0.0	0.0	0.0	0.0	0.0	0.0
Saturated Queue (Qs), veh	0.0	0.0	0.0	0.0	0.0	0.0	0.0	0.0
Saturated Capacity (cs), veh/h	0.0	0.0	0.0	0.0	0.0	0.0	0.0	0.0
Initial Queue Clear Time (tc), h	0.0	0.0	0.0	0.0	0.0	0.0	0.0	0.0

Intersection Summary	
HCM Average Control Delay	51.5
HCM Level of Service	D

Movement	EBL	EBT	EBR	WBL	WBT	WBR	NEL	NET	NER	SWL	SWT	SWR
Lane Configurations												
Volume (veh/h)	27	21	0	0	8	14	36	1689	18	0	0	0
Sign Control		Stop			Stop			Free			Free	
Grade		0%			0%			0%			0%	
Peak Hour Factor	0.93	0.93	0.93	0.93	0.93	0.93	0.93	0.93	0.93	0.93	0.93	0.93
Hourly flow rate (vph)	31	24	0	0	9	16	41	1925	21	0	0	0
Pedestrians												
Lane Width (ft)												
Walking Speed (ft/s)												
Percent Blockage												
Right turn flare (veh)												
Median type								None			None	
Median storage veh)												
Upstream signal (ft)												
pX, platoon unblocked												
vC, conflicting volume	744	2028	0	2029	2017	652	0			1946		
vC1, stage 1 conf vol												
vC2, stage 2 conf vol												
vCu, unblocked vol	744	2028	0	2029	2017	652	0			1946		
tC, single (s)	7.5	6.5	6.9	7.5	6.5	6.9	4.1			4.1		
tC, 2 stage (s)												
tF (s)	3.5	4.0	3.3	3.5	4.0	3.3	2.2			2.2		
p0 queue free %	88	57	100	100	84	96	97			100		
cM capacity (veh/h)	250	55	1084	22	56	411	1622			297		

Direction, Lane #	EB 1	WB 1	NE 1	NE 2	NE 3
Volume Total	55	25	522	963	502
Volume Left	31	0	41	0	0
Volume Right	0	16	0	0	21
cSH	99	125	1622	1700	1700
Volume to Capacity	0.55	0.20	0.03	0.57	0.30
Queue Length 95th (ft)	64	18	2	0	0
Control Delay (s)	79.7	41.0	0.8	0.0	0.0
Lane LOS	F	E	A		
Approach Delay (s)	79.7	41.0	0.2		
Approach LOS	F	E			

Intersection Summary			
Average Delay	2.8		
Intersection Capacity Utilization	51.9%	ICU Level of Service	A
Analysis Period (min)	15		

Movement	EBL	EBT	EBR	WBL	WBT	WBR	NEL	NET	NER	SWL	SWT	SWR
Lane Configurations												
Volume (veh/h)	0	24	0	0	3	0	1	1803	7	0	0	0
Sign Control		Stop			Stop			Free			Free	
Grade		0%			0%			0%			0%	
Peak Hour Factor	0.91	0.91	0.91	0.91	0.91	0.91	0.91	0.91	0.91	0.91	0.91	0.91
Hourly flow rate (vph)	0	28	0	0	3	0	1	2100	8	0	0	0
Pedestrians												
Lane Width (ft)												
Walking Speed (ft/s)												
Percent Blockage												
Right turn flare (veh)												
Median type								None			None	
Median storage veh)												
Upstream signal (ft)												
pX, platoon unblocked												
vC, conflicting volume	704	2111	0	2121	2107	704	0			2108		
vC1, stage 1 conf vol												
vC2, stage 2 conf vol												
vCu, unblocked vol	704	2111	0	2121	2107	704	0			2108		
tC, single (s)	7.5	6.5	6.9	7.5	6.5	6.9	4.1			4.1		
tC, 2 stage (s)												
tF (s)	3.5	4.0	3.3	3.5	4.0	3.3	2.2			2.2		
p0 queue free %	100	44	100	100	93	100	100			100		
cM capacity (veh/h)	307	50	1084	16	51	379	1622			257		

Direction, Lane #	EB 1	WB 1	NE 1	NE 2	NE 3
Volume Total	28	3	526	1050	533
Volume Left	0	0	1	0	0
Volume Right	0	0	0	0	8
cSH	50	51	1622	1700	1700
Volume to Capacity	0.56	0.07	0.00	0.62	0.31
Queue Length 95th (ft)	53	5	0	0	0
Control Delay (s)	143.4	81.3	0.0	0.0	0.0
Lane LOS	F	F	A		
Approach Delay (s)	143.4	81.3	0.0		
Approach LOS	F	F			

Intersection Summary			
Average Delay	2.0		
Intersection Capacity Utilization	47.1%	ICU Level of Service	A
Analysis Period (min)	15		

HCM Unsignalized Intersection Capacity Analysis
1: SW 97th Ave. & SW 174th St.

2/11/2015

Movement	EBL	EBT	EBR	WBL	WBT	WBR	NBL	NBT	NBR	SBL	SBT	SBR
Lane Configurations												
Sign Control		Stop			Stop			Stop			Stop	
Volume (vph)	7	122	48	50	89	1	38	13	21	2	1	2
Peak Hour Factor	0.84	0.84	0.84	0.84	0.84	0.84	0.84	0.84	0.84	0.84	0.84	0.84
Hourly flow rate (vph)	9	161	63	66	118	1	50	17	28	3	1	3

Direction, Lane #	EB 1	WB 1	NB 1	SB 1
Volume Total (vph)	234	185	95	7
Volume Left (vph)	9	66	50	3
Volume Right (vph)	63	1	28	3
Hadj (s)	-0.12	0.10	-0.04	-0.13
Departure Headway (s)	4.2	4.5	4.8	4.9
Degree Utilization, x	0.28	0.23	0.13	0.01
Capacity (veh/h)	822	766	690	663
Control Delay (s)	8.9	8.9	8.5	7.9
Approach Delay (s)	8.9	8.9	8.5	7.9
Approach LOS	A	A	A	A

Intersection Summary			
Delay	8.8		
HCM Level of Service	A		
Intersection Capacity Utilization	35.7%	ICU Level of Service	A
Analysis Period (min)	15		

Lane Group	EBL	NBT	SBT	NET
Lane Group Flow (vph)	90	561	17	4100
v/c Ratio	1.36	1.30	0.05	1.27
Control Delay	289.2	193.8	51.1	153.0
Queue Delay	0.0	0.0	0.0	0.0
Total Delay	289.2	193.8	51.1	153.0
Queue Length 50th (ft)	~131	~740	15	~2099
Queue Length 95th (ft)	#237	#883	35	#1888
Internal Link Dist (ft)	257	1041	665	1300
Turn Bay Length (ft)				
Base Capacity (vph)	66	432	336	3230
Starvation Cap Reductn	0	0	0	0
Spillback Cap Reductn	0	0	0	0
Storage Cap Reductn	0	0	0	0
Reduced v/c Ratio	1.36	1.30	0.05	1.27

Intersection Summary

~ Volume exceeds capacity, queue is theoretically infinite.
Queue shown is maximum after two cycles.

95th percentile volume exceeds capacity, queue may be longer.
Queue shown is maximum after two cycles.

Movement	EBL	EBR	NBL	NBT	NBR	SBL	SBT	NEL2	NEL	NET	NER
Lane Configurations											
Volume (vph)	1	67	3	21	400	3	10	1	2	3094	6
Ideal Flow (vphpl)	1900	1900	1900	1900	1900	1900	1900	1900	1900	1900	1900
Total Lost time (s)	5.0			5.0			5.0			5.0	
Lane Util. Factor	1.00			1.00			1.00			0.91	
Frt	0.87			0.87			1.00			1.00	
Flt Protected	1.00			1.00			0.99			1.00	
Satd. Flow (prot)	1613			1625			1841			5084	
Flt Permitted	1.00			1.00			0.77			1.00	
Satd. Flow (perm)	1613			1624			1428			5084	
Peak-hour factor, PHF	0.84	0.84	0.84	0.84	0.84	0.84	0.84	0.84	0.84	0.84	0.84
Growth Factor (vph)	111%	111%	111%	111%	111%	111%	111%	111%	111%	111%	111%
Adj. Flow (vph)	1	89	4	28	529	4	13	1	3	4088	8
RTOR Reduction (vph)	0	0	0	50	0	0	0	0	0	0	0
Lane Group Flow (vph)	90	0	0	511	0	0	17	0	0	4100	0
Turn Type	NA		Perm	NA		Perm	NA	Perm	Perm	NA	
Protected Phases	3			4			8			6	
Permitted Phases			4			8		6	6		
Actuated Green, G (s)	7.0			40.0			40.0			108.0	
Effective Green, g (s)	7.0			40.0			40.0			108.0	
Actuated g/C Ratio	0.04			0.24			0.24			0.64	
Clearance Time (s)	5.0			5.0			5.0			5.0	
Vehicle Extension (s)	3.0			3.0			3.0			3.0	
Lane Grp Cap (vph)	66			382			336			3230	
v/s Ratio Prot	c0.06										
v/s Ratio Perm				c0.31			0.01			0.81	
v/c Ratio	1.36			1.34			0.05			1.27	
Uniform Delay, d1	81.5			65.0			50.3			31.0	
Progression Factor	1.00			1.00			1.00			1.00	
Incremental Delay, d2	234.9			169.1			0.3			123.8	
Delay (s)	316.4			234.1			50.6			154.8	
Level of Service	F			F			D			F	
Approach Delay (s)	316.4			234.1			50.6			154.8	
Approach LOS	F			F			D			F	

Intersection Summary			
HCM Average Control Delay	166.8	HCM Level of Service	F
HCM Volume to Capacity ratio	1.29		
Actuated Cycle Length (s)	170.0	Sum of lost time (s)	15.0
Intersection Capacity Utilization	114.0%	ICU Level of Service	H
Analysis Period (min)	15		

c Critical Lane Group

Movement	EBL	EBR	NBL	NBT	SBT	SBR
Lane Configurations						
Volume (veh/h)	8	30	32	447	78	0
Sign Control	Stop			Free	Free	
Grade	0%			0%	0%	
Peak Hour Factor	0.90	0.90	0.90	0.90	0.90	0.90
Hourly flow rate (vph)	10	37	39	551	96	0
Pedestrians						
Lane Width (ft)						
Walking Speed (ft/s)						
Percent Blockage						
Right turn flare (veh)						
Median type				None	None	
Median storage veh)						
Upstream signal (ft)					1121	
pX, platoon unblocked						
vC, conflicting volume	726	96	96			
vC1, stage 1 conf vol						
vC2, stage 2 conf vol						
vCu, unblocked vol	726	96	96			
tC, single (s)	6.4	6.2	4.1			
tC, 2 stage (s)						
tF (s)	3.5	3.3	2.2			
p0 queue free %	97	96	97			
cM capacity (veh/h)	381	960	1497			

Direction, Lane #	EB 1	NB 1	SB 1
Volume Total	47	591	96
Volume Left	10	39	0
Volume Right	37	0	0
cSH	727	1497	1700
Volume to Capacity	0.06	0.03	0.06
Queue Length 95th (ft)	5	2	0
Control Delay (s)	10.3	0.8	0.0
Lane LOS	B	A	
Approach Delay (s)	10.3	0.8	0.0
Approach LOS	B		

Intersection Summary			
Average Delay	1.3		
Intersection Capacity Utilization	44.7%	ICU Level of Service	A
Analysis Period (min)	15		

Movement	WBL	WBR	NBT	NBR	SBL	SBT
Lane Configurations						
Volume (veh/h)	37	45	469	26	11	90
Sign Control	Stop		Free			Free
Grade	0%		0%			0%
Peak Hour Factor	0.89	0.89	0.89	0.89	0.89	0.89
Hourly flow rate (vph)	46	56	585	32	14	112
Pedestrians						
Lane Width (ft)						
Walking Speed (ft/s)						
Percent Blockage						
Right turn flare (veh)						
Median type			None			None
Median storage veh)						
Upstream signal (ft)						
pX, platoon unblocked						
vC, conflicting volume	741	601			617	
vC1, stage 1 conf vol						
vC2, stage 2 conf vol						
vCu, unblocked vol	741	601			617	
tC, single (s)	6.4	6.2			4.1	
tC, 2 stage (s)						
tF (s)	3.5	3.3			2.2	
p0 queue free %	88	89			99	
cM capacity (veh/h)	378	500			963	

Direction, Lane #	WB 1	NB 1	SB 1
Volume Total	102	617	126
Volume Left	46	0	14
Volume Right	56	32	0
cSH	437	1700	963
Volume to Capacity	0.23	0.36	0.01
Queue Length 95th (ft)	22	0	1
Control Delay (s)	15.7	0.0	1.1
Lane LOS	C		A
Approach Delay (s)	15.7	0.0	1.1
Approach LOS	C		

Intersection Summary			
Average Delay	2.1		
Intersection Capacity Utilization	41.2%	ICU Level of Service	A
Analysis Period (min)	15		

Movement	EBL	EBR	NBL	NBT	SBT	SBR
Lane Configurations						
Volume (veh/h)	5	21	15	526	123	0
Sign Control	Stop			Free	Free	
Grade	0%			0%	0%	
Peak Hour Factor	0.95	0.95	0.95	0.95	0.95	0.95
Hourly flow rate (vph)	6	25	18	615	144	0
Pedestrians						
Lane Width (ft)						
Walking Speed (ft/s)						
Percent Blockage						
Right turn flare (veh)						
Median type				None	None	
Median storage veh)						
Upstream signal (ft)				1230		
pX, platoon unblocked	0.80					
vC, conflicting volume	793	144	144			
vC1, stage 1 conf vol						
vC2, stage 2 conf vol						
vCu, unblocked vol	617	144	144			
tC, single (s)	6.4	6.2	4.1			
tC, 2 stage (s)						
tF (s)	3.5	3.3	2.2			
p0 queue free %	98	97	99			
cM capacity (veh/h)	358	904	1439			

Direction, Lane #	EB 1	NB 1	SB 1
Volume Total	30	632	144
Volume Left	6	18	0
Volume Right	25	0	0
cSH	699	1439	1700
Volume to Capacity	0.04	0.01	0.08
Queue Length 95th (ft)	3	1	0
Control Delay (s)	10.4	0.3	0.0
Lane LOS	B	A	
Approach Delay (s)	10.4	0.3	0.0
Approach LOS	B		

Intersection Summary			
Average Delay	0.7		
Intersection Capacity Utilization	52.2%	ICU Level of Service	A
Analysis Period (min)	15		

Movement	EBL	EBT	EBR	WBL	WBT	WBR	NBL	NBT	NBR	SBL	SBT	SBR
Lane Configurations												
Volume (veh/h)	11	3	7	5	8	30	10	511	0	8	140	6
Sign Control		Stop			Stop			Free			Free	
Grade		0%			0%			0%			0%	
Peak Hour Factor	0.93	0.93	0.93	0.93	0.93	0.93	0.93	0.93	0.93	0.93	0.93	0.93
Hourly flow rate (vph)	13	4	8	6	10	36	12	610	0	10	167	7
Pedestrians												
Lane Width (ft)												
Walking Speed (ft/s)												
Percent Blockage												
Right turn flare (veh)												
Median type								None			None	
Median storage veh)												
Upstream signal (ft)								904				
pX, platoon unblocked	0.79	0.79		0.79	0.79	0.79				0.79		
vC, conflicting volume	864	824	171	834	827	610	174			610		
vC1, stage 1 conf vol												
vC2, stage 2 conf vol												
vCu, unblocked vol	696	645	171	658	650	375	174			375		
tC, single (s)	7.1	6.5	6.2	7.1	6.5	6.2	4.1			4.1		
tC, 2 stage (s)												
tF (s)	3.5	4.0	3.3	3.5	4.0	3.3	2.2			2.2		
p0 queue free %	95	99	99	98	97	93	99			99		
cM capacity (veh/h)	253	303	873	289	302	531	1402			936		

Direction, Lane #	EB 1	WB 1	NB 1	SB 1
Volume Total	25	51	622	184
Volume Left	13	6	12	10
Volume Right	8	36	0	7
cSH	342	429	1402	936
Volume to Capacity	0.07	0.12	0.01	0.01
Queue Length 95th (ft)	6	10	1	1
Control Delay (s)	16.4	14.5	0.2	0.6
Lane LOS	C	B	A	A
Approach Delay (s)	16.4	14.5	0.2	0.6
Approach LOS	C	B		

Intersection Summary			
Average Delay	1.6		
Intersection Capacity Utilization	44.2%	ICU Level of Service	A
Analysis Period (min)	15		

Movement	EBL	EBT	EBR	WBL	WBT	WBR	NBL	NBT	NBR	SBL	SBT	SBR
Lane Configurations												
Volume (veh/h)	5	1	2	1	4	3	2	519	2	1	142	5
Sign Control		Stop			Stop			Free			Free	
Grade		0%			0%			0%			0%	
Peak Hour Factor	0.91	0.91	0.91	0.91	0.91	0.91	0.91	0.91	0.91	0.91	0.91	0.91
Hourly flow rate (vph)	6	1	2	1	5	4	2	633	2	1	173	6
Pedestrians												
Lane Width (ft)												
Walking Speed (ft/s)												
Percent Blockage												
Right turn flare (veh)												
Median type								None			None	
Median storage veh)												
Upstream signal (ft)								601				
pX, platoon unblocked	0.79	0.79		0.79	0.79	0.79				0.79		
vC, conflicting volume	824	819	176	821	821	634	179			636		
vC1, stage 1 conf vol												
vC2, stage 2 conf vol												
vCu, unblocked vol	648	642	176	644	644	409	179			411		
tC, single (s)	7.1	6.5	6.2	7.1	6.5	6.2	4.1			4.1		
tC, 2 stage (s)												
tF (s)	3.5	4.0	3.3	3.5	4.0	3.3	2.2			2.2		
p0 queue free %	98	100	100	100	98	99	100			100		
cM capacity (veh/h)	298	310	867	304	309	510	1396			911		

Direction, Lane #	EB 1	WB 1	NB 1	SB 1
Volume Total	10	10	638	181
Volume Left	6	1	2	1
Volume Right	2	4	2	6
cSH	358	362	1396	911
Volume to Capacity	0.03	0.03	0.00	0.00
Queue Length 95th (ft)	2	2	0	0
Control Delay (s)	15.3	15.2	0.1	0.1
Lane LOS	C	C	A	A
Approach Delay (s)	15.3	15.2	0.1	0.1
Approach LOS	C	C		

Intersection Summary			
Average Delay	0.4		
Intersection Capacity Utilization	41.9%	ICU Level of Service	A
Analysis Period (min)	15		

Movement	EBL	EBT	EBR	WBL	WBT	WBR	NBL	NBT	NBR	SBL	SBT	SBR
Lane Configurations												
Volume (veh/h)	2	3	29	0	1	3	15	504	3	3	140	6
Sign Control		Stop			Stop			Free			Free	
Grade		0%			0%			0%			0%	
Peak Hour Factor	0.94	0.94	0.94	0.94	0.94	0.94	0.94	0.94	0.94	0.94	0.94	0.94
Hourly flow rate (vph)	2	4	34	0	1	4	18	595	4	4	165	7
Pedestrians												
Lane Width (ft)												
Walking Speed (ft/s)												
Percent Blockage												
Right turn flare (veh)												
Median type								None			None	
Median storage veh)												
Upstream signal (ft)								300				
pX, platoon unblocked	0.80	0.80		0.80	0.80	0.80				0.80		
vC, conflicting volume	812	810	169	844	812	597	172			599		
vC1, stage 1 conf vol												
vC2, stage 2 conf vol												
vCu, unblocked vol	642	639	169	682	641	373	172			375		
tC, single (s)	7.1	6.5	6.2	7.1	6.5	6.2	4.1			4.1		
tC, 2 stage (s)												
tF (s)	3.5	4.0	3.3	3.5	4.0	3.3	2.2			2.2		
p0 queue free %	99	99	96	100	100	99	99			100		
cM capacity (veh/h)	303	310	875	274	310	539	1404			948		

Direction, Lane #	EB 1	WB 1	NB 1	SB 1
Volume Total	40	5	616	176
Volume Left	2	0	18	4
Volume Right	34	4	4	7
cSH	688	455	1404	948
Volume to Capacity	0.06	0.01	0.01	0.00
Queue Length 95th (ft)	5	1	1	0
Control Delay (s)	10.6	13.0	0.4	0.2
Lane LOS	B	B	A	A
Approach Delay (s)	10.6	13.0	0.4	0.2
Approach LOS	B	B		

Intersection Summary			
Average Delay	0.9		
Intersection Capacity Utilization	49.0%	ICU Level of Service	A
Analysis Period (min)	15		

Lane Group	EBL	EBT	EBR	WBL	WBT	NBL	NBT	SBL	SBT
Lane Group Flow (vph)	50	444	117	76	604	230	599	32	154
v/c Ratio	0.12	0.74	0.23	0.19	0.50	0.41	0.68	0.08	0.19
Control Delay	16.1	38.2	7.5	16.9	28.3	22.2	38.4	18.9	33.1
Queue Delay	0.0	0.0	0.0	0.0	0.0	0.0	0.0	0.0	0.0
Total Delay	16.1	38.2	7.5	16.9	28.3	22.2	38.4	18.9	33.1
Queue Length 50th (ft)	18	241	0	28	178	102	178	13	45
Queue Length 95th (ft)	40	350	45	56	237	166	244	32	75
Internal Link Dist (ft)		1915			422		229		156
Turn Bay Length (ft)	130			95		155		130	
Base Capacity (vph)	462	744	612	391	1462	561	1089	421	1004
Starvation Cap Reductn	0	0	0	0	0	0	0	0	0
Spillback Cap Reductn	0	0	0	0	0	0	0	0	0
Storage Cap Reductn	0	0	0	0	0	0	0	0	0
Reduced v/c Ratio	0.11	0.60	0.19	0.19	0.41	0.41	0.55	0.08	0.15

Intersection Summary

Movement	EBL	EBT	EBR	WBL	WBT	WBR	NBL	NBT	NBR	SBL	SBT	SBR
Lane Configurations												
Volume (vph)	43	380	100	65	466	51	197	440	73	27	130	2
Ideal Flow (vphpl)	1900	1900	1900	1900	1900	1900	1900	1900	1900	1900	1900	1900
Total Lost time (s)	3.0	3.0	5.0	3.0	3.0		3.0	3.0		3.0	3.0	
Lane Util. Factor	1.00	1.00	1.00	1.00	0.95		1.00	0.95		1.00	0.95	
Frt	1.00	1.00	0.85	1.00	0.99		1.00	0.98		1.00	1.00	
Flt Protected	0.95	1.00	1.00	0.95	1.00		0.95	1.00		0.95	1.00	
Satd. Flow (prot)	1770	1863	1583	1770	3486		1770	3464		1770	3532	
Flt Permitted	0.34	1.00	1.00	0.38	1.00		0.65	1.00		0.42	1.00	
Satd. Flow (perm)	634	1863	1583	700	3486		1219	3464		781	3532	
Peak-hour factor, PHF	0.95	0.95	0.95	0.95	0.95	0.95	0.95	0.95	0.95	0.95	0.95	0.95
Growth Factor (vph)	111%	111%	111%	111%	111%	111%	111%	111%	111%	111%	111%	111%
Adj. Flow (vph)	50	444	117	76	544	60	230	514	85	32	152	2
RTOR Reduction (vph)	0	0	87	0	7	0	0	11	0	0	1	0
Lane Group Flow (vph)	50	444	30	76	597	0	230	588	0	32	153	0
Turn Type	custom	NA	custom	custom	NA		custom	NA		custom	NA	
Protected Phases	1 2	2 4		1 3	3 4		5 6	6 8		5 7	7 8	
Permitted Phases	4		4	4			8			8		
Actuated Green, G (s)	38.7	30.4	26.3	35.3	33.0		35.3	21.6		29.6	21.9	
Effective Green, g (s)	38.7	30.4	26.3	35.3	33.0		35.3	21.6		29.6	21.9	
Actuated g/C Ratio	0.38	0.30	0.26	0.35	0.32		0.35	0.21		0.29	0.21	
Clearance Time (s)			5.0									
Vehicle Extension (s)			3.0									
Lane Grp Cap (vph)	378	554	407	336	1125		523	731		355	756	
v/s Ratio Prot	0.02	c0.24		c0.02	c0.17		c0.08	c0.17		0.01	c0.04	
v/s Ratio Perm	0.03		0.02	0.06			0.07			0.01		
v/c Ratio	0.13	0.80	0.07	0.23	0.53		0.44	0.80		0.09	0.20	
Uniform Delay, d1	20.5	33.2	28.8	23.2	28.3		25.2	38.3		26.3	33.0	
Progression Factor	1.00	1.00	1.00	1.00	1.00		1.00	1.00		1.00	1.00	
Incremental Delay, d2	0.2	8.2	0.1	0.3	0.5		0.6	6.4		0.1	0.1	
Delay (s)	20.6	41.3	28.9	23.5	28.8		25.8	44.8		26.4	33.2	
Level of Service	C	D	C	C	C		C	D		C	C	
Approach Delay (s)		37.3			28.2			39.5			32.0	
Approach LOS		D			C			D			C	

Intersection Summary			
HCM Average Control Delay	35.0	HCM Level of Service	C
HCM Volume to Capacity ratio	0.65		
Actuated Cycle Length (s)	102.3	Sum of lost time (s)	24.0
Intersection Capacity Utilization	60.0%	ICU Level of Service	B
Analysis Period (min)	15		

c Critical Lane Group

Movement	EBL	EBT	WBT	WBR	SBL	SBR
Lane Configurations						
Volume (veh/h)	5	494	619	27	5	4
Sign Control		Free	Free		Stop	
Grade		0%	0%		0%	
Peak Hour Factor	0.88	0.88	0.88	0.88	0.88	0.88
Hourly flow rate (vph)	6	623	781	34	6	5
Pedestrians						
Lane Width (ft)						
Walking Speed (ft/s)						
Percent Blockage						
Right turn flare (veh)						
Median type		None	None			
Median storage veh)						
Upstream signal (ft)		502				
pX, platoon unblocked					0.77	
vC, conflicting volume	815				1434	798
vC1, stage 1 conf vol						
vC2, stage 2 conf vol						
vCu, unblocked vol	815				1414	798
tC, single (s)	4.1				6.4	6.2
tC, 2 stage (s)						
tF (s)	2.2				3.5	3.3
p0 queue free %	99				95	99
cM capacity (veh/h)	812				117	386

Direction, Lane #	EB 1	EB 2	WB 1	SB 1
Volume Total	6	623	815	11
Volume Left	6	0	0	6
Volume Right	0	0	34	5
cSH	812	1700	1700	169
Volume to Capacity	0.01	0.37	0.48	0.07
Queue Length 95th (ft)	1	0	0	5
Control Delay (s)	9.5	0.0	0.0	27.8
Lane LOS	A			D
Approach Delay (s)	0.1		0.0	27.8
Approach LOS				D

Intersection Summary			
Average Delay	0.3		
Intersection Capacity Utilization	48.0%	ICU Level of Service	A
Analysis Period (min)	15		

Lane Group	EBL	EBT	WBL	WBT	NBL	NBT	SBL	SBT
Lane Group Flow (vph)	464	577	182	625	67	2256	133	1703
v/c Ratio	1.04	0.65	0.66	1.08	0.54	1.06	0.96	0.80
Control Delay	112.1	60.6	78.6	125.5	41.3	86.2	105.2	45.5
Queue Delay	0.0	0.0	0.0	0.0	0.0	0.0	0.0	0.0
Total Delay	112.1	60.6	78.6	125.5	41.3	86.2	105.2	45.5
Queue Length 50th (ft)	~554	304	210	~426	38	~1011	98	598
Queue Length 95th (ft)	#699	344	289	#502	68	#961	#216	593
Internal Link Dist (ft)		364		1915		469		768
Turn Bay Length (ft)			286		160		130	
Base Capacity (vph)	448	894	275	577	128	2119	138	2142
Starvation Cap Reductn	0	0	0	0	0	0	0	0
Spillback Cap Reductn	0	0	0	0	0	0	0	0
Storage Cap Reductn	0	0	0	0	0	0	0	0
Reduced v/c Ratio	1.04	0.65	0.66	1.08	0.52	1.06	0.96	0.80

Intersection Summary

~ Volume exceeds capacity, queue is theoretically infinite.
Queue shown is maximum after two cycles.

95th percentile volume exceeds capacity, queue may be longer.
Queue shown is maximum after two cycles.

Movement	EBL	EBT	EBR	WBL	WBT	WBR	NBL	NBT	NBR	SBL	SBT	SBR
Lane Configurations												
Volume (vph)	351	433	4	153	452	6	51	1668	39	101	1168	121
Ideal Flow (vphpl)	1900	1900	1900	1900	1900	1900	1900	1900	1900	1900	1900	1900
Total Lost time (s)	5.0	5.0		5.0	5.0		3.0	5.0		3.0	5.0	
Lane Util. Factor	1.00	0.95		0.91	0.91		1.00	0.91		1.00	0.91	
Frt	1.00	1.00		1.00	1.00		1.00	1.00		1.00	0.99	
Flt Protected	0.95	1.00		0.95	1.00		0.95	1.00		0.95	1.00	
Satd. Flow (prot)	1770	3535		1610	3378		1770	5068		1770	5014	
Flt Permitted	0.95	1.00		0.95	1.00		0.06	1.00		0.06	1.00	
Satd. Flow (perm)	1770	3535		1610	3378		105	5068		103	5014	
Peak-hour factor, PHF	0.84	0.84	0.84	0.84	0.84	0.84	0.84	0.84	0.84	0.84	0.84	0.84
Growth Factor (vph)	111%	111%	111%	111%	111%	111%	111%	111%	111%	111%	111%	111%
Adj. Flow (vph)	464	572	5	202	597	8	67	2204	52	133	1543	160
RTOR Reduction (vph)	0	0	0	0	1	0	0	1	0	0	7	0
Lane Group Flow (vph)	464	577	0	182	624	0	67	2255	0	133	1696	0
Turn Type	Split	NA		Split	NA		pm+pt	NA		pm+pt	NA	
Protected Phases	4	4		8	8		5	2		1	6	
Permitted Phases							2			6		
Actuated Green, G (s)	43.0	43.0		29.0	29.0		78.6	71.0		81.4	72.4	
Effective Green, g (s)	43.0	43.0		29.0	29.0		78.6	71.0		81.4	72.4	
Actuated g/C Ratio	0.25	0.25		0.17	0.17		0.46	0.42		0.48	0.43	
Clearance Time (s)	5.0	5.0		5.0	5.0		3.0	5.0		3.0	5.0	
Vehicle Extension (s)	3.0	3.0		3.0	3.0		3.0	3.0		3.0	3.0	
Lane Grp Cap (vph)	448	894		275	576		123	2117		138	2135	
v/s Ratio Prot	c0.26	0.16		0.11	c0.18		0.02	c0.44		c0.05	0.34	
v/s Ratio Perm							0.23			0.41		
v/c Ratio	1.04	0.65		0.66	1.08		0.54	1.07		0.96	0.79	
Uniform Delay, d1	63.5	56.7		65.9	70.5		33.4	49.5		49.0	42.3	
Progression Factor	1.00	1.00		1.00	1.00		1.00	1.00		1.00	1.00	
Incremental Delay, d2	52.0	1.6		5.9	62.2		4.9	39.6		65.1	2.1	
Delay (s)	115.5	58.3		71.8	132.7		38.3	89.1		114.1	44.5	
Level of Service	F	E		E	F		D	F		F	D	
Approach Delay (s)		83.8			118.9			87.6			49.5	
Approach LOS		F			F			F			D	

Intersection Summary			
HCM Average Control Delay	79.5	HCM Level of Service	E
HCM Volume to Capacity ratio	1.08		
Actuated Cycle Length (s)	170.0	Sum of lost time (s)	21.0
Intersection Capacity Utilization	94.3%	ICU Level of Service	F
Analysis Period (min)	15		

c Critical Lane Group

Movement	EBL	EBT	EBR	WBL	WBT	WBR	NBL	NBT	NBR	SBL	SBT	SBR
Lane Configurations												
Volume (vph)	351	433	4	153	452	6	51	1668	39	101	1168	121
Movement Number	7	4	14	3	8	18	5	2	12	1	6	16
Initial Queue, veh	0	0	0	0	0	0	0	0	0	0	0	0
Ped-Bike Adj. Factor (A_pbT)	1.00		1.00	1.00		1.00	1.00		1.00	1.00		1.00
Parking, Bus Adj. Factors	1.00	1.00	1.00	1.00	1.00	1.00	1.00	1.00	1.00	1.00	1.00	1.00
Adj. Sat. Flow Rate, veh/h/ln	1863	1863	1863	1863	1863	1863	1863	1863	1863	1863	1863	1863
Lanes	1	2	0	1	2	0	1	3	0	1	3	0
Lane Assignment												
Capacity, veh/h	444	921	9	287	594	8	169	2204	51	143	2104	218
Proportion Arriving On Green	0.25	0.25	0.25	0.16	0.16	0.16	0.03	0.43	0.43	0.05	0.45	0.45
Movement Delay, s/veh	87.9	55.2	55.2	68.2	94.0	94.3	30.7	52.8	59.1	68.5	36.6	37.5
Movement LOS	F	E	E	E	F	F	C	D	E	E	D	D
Approach Volume, veh/h		938			727			2093			1655	
Approach Delay, s/veh		69.8			87.6			54.3			39.2	
Approach LOS		E			F			D			D	

Timer:	1	2	3	4	5	6	7	8
Assigned Phase	1	2	8	4	5	6		
Case No	1.1	4.0	10.0	10.0	1.1	4.0		
Phase Duration (G+Y+Rc), s	10.88	76.00	31.66	46.18	7.85	79.02		
Change Period (Y+Rc), s	3.00	5.00	5.00	5.00	3.00	5.00		
Max. Allowable Headway (MAH), s	4.00	3.92	3.93	3.95	4.00	3.92		
Maximum Green Setting (Gmax), s	9.00	71.00	29.00	43.00	8.00	72.00		
Max. Queue Clearance Time (g_c+I1), s	7.88	61.63	25.75	40.06	5.15	40.31		
Green Extension Time (g_e), s	0.03	8.26	0.91	1.12	0.03	22.53		
Probability of Phase Call (p_c)	0.996	1.000	1.000	1.000	0.938	1.000		
Probability of Max Out (p_x)	1.000	0.919	1.000	1.000	1.000	0.651		

Left-Turn Movement Data					
Assigned Movement	1		3	7	5
Mvmt. Sat Flow, veh/h	1774.04		1774.04	1774.04	1774.04

Through Movement Data					
Assigned Movement		2	8	4	6
Mvmt. Sat Flow, veh/h		5112.47	3668.23	3685.45	4682.32

Right-Turn Movement Data					
Assigned Movement		12	18	14	16
Mvmt. Sat Flow, veh/h		119.40	48.67	34.03	485.03

Left Lane Group Data								
Assigned Movement	1	0	3	7	5	0	0	0
Lane Assignment	L (Pr/Pm)		L		LL (Pr/Pm)			
Lanes in Group	1	0	1	1	1	0	0	0
Group Volume (v), veh/h	120.2	0.0	182.1	417.9	60.7	0.0	0.0	0.0
Group Sat. Flow (s), veh/h/ln	1774.0	0.0	1774.0	1774.0	1774.0	0.0	0.0	0.0
Queue Serve Time (g_s), s	5.9	0.0	15.8	38.1	3.1	0.0	0.0	0.0
Cycle Queue Clear Time (g_c), s	5.9	0.0	15.8	38.1	3.1	0.0	0.0	0.0

Perm LT Sat Flow Rate (s_l), veh/h/ln	207.8	0.0	1774.0	1774.0	337.1	0.0	0.0	0.0
Shared LT Sat Flow (s_sh), veh/h/ln	0.0	0.0	0.0	0.0	0.0	0.0	0.0	0.0
Perm LT Eff. Green (g_p), s	76.0	0.0	0.0	0.0	71.0	0.0	0.0	0.0
Perm LT Serve Time (g_u), s	11.4	0.0	0.0	0.0	35.7	0.0	0.0	0.0
Perm LT Que Serve Time (g_ps), s	11.4	0.0	0.0	0.0	7.8	0.0	0.0	0.0
Time to First Blk (g_f), s	0.0	0.0	0.0	0.0	0.0	0.0	0.0	0.0
Serve Time pre Blk (g_fs), s	0.0	0.0	0.0	0.0	0.0	0.0	0.0	0.0
Proportion LT Inside Lane (P_L)	1.000	0.000	1.000	1.000	1.000	0.000	0.000	0.000
Lane Group Capacity (c), veh/h	142.9	0.0	287.1	443.5	169.1	0.0	0.0	0.0
Volume-to-Capacity Ratio (X)	0.842	0.000	0.634	0.942	0.359	0.000	0.000	0.000
Available Capacity (c_a), veh/h	155.0	0.0	312.3	463.1	203.0	0.0	0.0	0.0
Upstream Filter Factor (I)	1.000	0.000	1.000	1.000	1.000	0.000	0.000	0.000
Uniform Delay (d1), s/veh	38.1	0.0	64.5	60.6	29.4	0.0	0.0	0.0
Incremental Delay (d2), s/veh	30.4	0.0	3.7	27.3	1.3	0.0	0.0	0.0
Initial Queue Delay (d3), s/veh	0.0	0.0	0.0	0.0	0.0	0.0	0.0	0.0
Control Delay (d), s/veh	68.5	0.0	68.2	87.9	30.7	0.0	0.0	0.0
First-Term Queue (Q1), veh/ln	2.5	0.0	7.2	17.2	1.4	0.0	0.0	0.0
Second-Term Queue (Q2), veh/ln	1.2	0.0	0.3	3.4	0.1	0.0	0.0	0.0
Third-Term Queue (Q3), veh/ln	0.0	0.0	0.0	0.0	0.0	0.0	0.0	0.0
Percentile bk-of-que factor (f_B%)	1.000	0.000	1.000	1.000	1.000	0.000	0.000	0.000
Percentile Back of Queue (Q%), veh/ln	3.7	0.0	7.5	20.5	1.4	0.0	0.0	0.0
Percentile Storage Ratio (RQ%)	0.73	0.00	0.67	1.51	0.23	0.00	0.00	0.00
Initial Queue (Qb), veh	0.0	0.0	0.0	0.0	0.0	0.0	0.0	0.0
Final (Residual) Queue (Qe), veh	0.0	0.0	0.0	0.0	0.0	0.0	0.0	0.0
Saturated Delay (ds), s/veh	0.0	0.0	0.0	0.0	0.0	0.0	0.0	0.0
Saturated Queue (Qs), veh	0.0	0.0	0.0	0.0	0.0	0.0	0.0	0.0
Saturated Capacity (cs), veh/h	0.0	0.0	0.0	0.0	0.0	0.0	0.0	0.0
Initial Queue Clear Time (tc), h	0.0	0.0	0.0	0.0	0.0	0.0	0.0	0.0
Middle Lane Group Data								
Assigned Movement	0	2	8	4	0	6	0	0
Lane Assignment		T	T	T		T		
Lanes in Group	0	2	1	1	0	2	0	0
Group Volume (v), veh/h	0.0	1316.0	273.1	260.4	0.0	1006.7	0.0	0.0
Group Sat. Flow (s), veh/h/ln	0.0	1695.1	1862.7	1862.7	0.0	1695.1	0.0	0.0
Queue Serve Time (g_s), s	0.0	59.5	23.7	20.1	0.0	38.3	0.0	0.0
Cycle Queue Clear Time (g_c), s	0.0	59.5	23.7	20.1	0.0	38.3	0.0	0.0
Lane Group Capacity (c), veh/h	0.0	1461.3	301.5	465.7	0.0	1523.6	0.0	0.0
Volume-to-Capacity Ratio (X)	0.000	0.901	0.906	0.559	0.000	0.661	0.000	0.000
Available Capacity (c_a), veh/h	0.0	1461.3	328.0	486.3	0.0	1523.6	0.0	0.0
Upstream Filter Factor (I)	0.000	1.000	1.000	1.000	0.000	1.000	0.000	0.000
Uniform Delay (d1), s/veh	0.0	43.6	67.8	53.9	0.0	35.5	0.0	0.0
Incremental Delay (d2), s/veh	0.0	9.2	26.2	1.3	0.0	1.1	0.0	0.0
Initial Queue Delay (d3), s/veh	0.0	0.0	0.0	0.0	0.0	0.0	0.0	0.0
Control Delay (d), s/veh	0.0	52.8	94.0	55.2	0.0	36.6	0.0	0.0
First-Term Queue (Q1), veh/ln	0.0	24.9	11.4	9.5	0.0	16.0	0.0	0.0
Second-Term Queue (Q2), veh/ln	0.0	1.9	2.2	0.2	0.0	0.2	0.0	0.0
Third-Term Queue (Q3), veh/ln	0.0	0.0	0.0	0.0	0.0	0.0	0.0	0.0
Percentile bk-of-que factor (f_B%)	0.000	1.000	1.000	1.000	0.000	1.000	0.000	0.000
Percentile Back of Queue (Q%), veh/ln	0.0	26.8	13.5	9.7	0.0	16.2	0.0	0.0
Percentile Storage Ratio (RQ%)	0.00	1.49	0.18	0.71	0.00	0.56	0.00	0.00

Initial Queue (Qb), veh	0.0	0.0	0.0	0.0	0.0	0.0	0.0	0.0
Final (Residual) Queue (Qe), veh	0.0	0.0	0.0	0.0	0.0	0.0	0.0	0.0
Saturated Delay (ds), s/veh	0.0	0.0	0.0	0.0	0.0	0.0	0.0	0.0
Saturated Queue (Qs), veh	0.0	0.0	0.0	0.0	0.0	0.0	0.0	0.0
Saturated Capacity (cs), veh/h	0.0	0.0	0.0	0.0	0.0	0.0	0.0	0.0
Initial Queue Clear Time (tc), h	0.0	0.0	0.0	0.0	0.0	0.0	0.0	0.0

Right Lane Group Data								
Assigned Movement	0	12	18	14	0	16	0	0
Lane Assignment		T+R	T+R	T+R		T+R		
Lanes in Group	0	1	1	1	0	1	0	0
Group Volume (v), veh/h	0.0	716.1	272.1	259.8	0.0	527.8	0.0	0.0
Group Sat. Flow (s), veh/h/ln	0.0	1841.7	1854.2	1856.7	0.0	1777.2	0.0	0.0
Queue Serve Time (g_s), s	0.0	59.6	23.7	20.1	0.0	38.3	0.0	0.0
Cycle Queue Clear Time (g_c), s	0.0	59.6	23.7	20.1	0.0	38.3	0.0	0.0
Prot RT Sat Flow Rate (s_R), veh/h/ln	0.0	0.0	0.0	0.0	0.0	0.0	0.0	0.0
Prot RT Eff. Green (g_R), s	0.0	0.0	0.0	0.0	0.0	0.0	0.0	0.0
Proportion RT Outside Lane (P_R)	0.000	0.065	0.026	0.018	0.000	0.273	0.000	0.000
Lane Group Capacity (c), veh/h	0.0	793.9	300.1	464.2	0.0	798.7	0.0	0.0
Volume-to-Capacity Ratio (X)	0.000	0.902	0.907	0.560	0.000	0.661	0.000	0.000
Available Capacity (c_a), veh/h	0.0	793.9	326.4	484.7	0.0	798.7	0.0	0.0
Upstream Filter Factor (I)	0.000	1.000	1.000	1.000	0.000	1.000	0.000	0.000
Uniform Delay (d1), s/veh	0.0	43.6	67.8	53.9	0.0	35.5	0.0	0.0
Incremental Delay (d2), s/veh	0.0	15.5	26.4	1.3	0.0	2.0	0.0	0.0
Initial Queue Delay (d3), s/veh	0.0	0.0	0.0	0.0	0.0	0.0	0.0	0.0
Control Delay (d), s/veh	0.0	59.1	94.3	55.2	0.0	37.5	0.0	0.0
First-Term Queue (Q1), veh/ln	0.0	27.1	11.3	9.5	0.0	16.7	0.0	0.0
Second-Term Queue (Q2), veh/ln	0.0	3.4	2.2	0.2	0.0	0.5	0.0	0.0
Third-Term Queue (Q3), veh/ln	0.0	0.0	0.0	0.0	0.0	0.0	0.0	0.0
Percentile bk-of-que factor (f_B%)	0.000	1.000	1.000	1.000	0.000	1.000	0.000	0.000
Percentile Back of Queue (Q%), veh/ln	0.0	30.5	13.5	9.7	0.0	17.2	0.0	0.0
Percentile Storage Ratio (RQ%)	0.00	1.70	0.18	0.71	0.00	0.60	0.00	0.00
Initial Queue (Qb), veh	0.0	0.0	0.0	0.0	0.0	0.0	0.0	0.0
Final (Residual) Queue (Qe), veh	0.0	0.0	0.0	0.0	0.0	0.0	0.0	0.0
Saturated Delay (ds), s/veh	0.0	0.0	0.0	0.0	0.0	0.0	0.0	0.0
Saturated Queue (Qs), veh	0.0	0.0	0.0	0.0	0.0	0.0	0.0	0.0
Saturated Capacity (cs), veh/h	0.0	0.0	0.0	0.0	0.0	0.0	0.0	0.0
Initial Queue Clear Time (tc), h	0.0	0.0	0.0	0.0	0.0	0.0	0.0	0.0

Intersection Summary	
HCM Average Control Delay	56.9
HCM Level of Service	E

Movement	EBL	EBT	EBR	WBL	WBT	WBR	NEL	NET	NER	SWL	SWT	SWR
Lane Configurations												
Volume (veh/h)	13	4	0	0	5	9	32	2305	19	0	0	0
Sign Control		Stop			Stop			Free			Free	
Grade		0%			0%			0%			0%	
Peak Hour Factor	0.96	0.96	0.96	0.96	0.96	0.96	0.96	0.96	0.96	0.96	0.96	0.96
Hourly flow rate (vph)	15	5	0	0	6	10	37	2665	22	0	0	0
Pedestrians												
Lane Width (ft)												
Walking Speed (ft/s)												
Percent Blockage												
Right turn flare (veh)												
Median type								None			None	
Median storage veh)												
Upstream signal (ft)												
pX, platoon unblocked												
vC, conflicting volume	976	2761	0	2752	2750	899	0			2687		
vC1, stage 1 conf vol												
vC2, stage 2 conf vol												
vCu, unblocked vol	976	2761	0	2752	2750	899	0			2687		
tC, single (s)	7.5	6.5	6.9	7.5	6.5	6.9	4.1			4.1		
tC, 2 stage (s)												
tF (s)	3.5	4.0	3.3	3.5	4.0	3.3	2.2			2.2		
p0 queue free %	90	75	100	100	70	96	98			100		
cM capacity (veh/h)	149	19	1084	7	19	282	1622			151		

Direction, Lane #	EB 1	WB 1	NE 1	NE 2	NE 3
Volume Total	20	16	703	1333	688
Volume Left	15	0	37	0	0
Volume Right	0	10	0	0	22
cSH	57	48	1622	1700	1700
Volume to Capacity	0.35	0.34	0.02	0.78	0.40
Queue Length 95th (ft)	31	30	2	0	0
Control Delay (s)	99.3	115.6	0.6	0.0	0.0
Lane LOS	F	F	A		
Approach Delay (s)	99.3	115.6	0.2		
Approach LOS	F	F			

Intersection Summary			
Average Delay	1.5		
Intersection Capacity Utilization	65.0%	ICU Level of Service	C
Analysis Period (min)	15		

Movement	EBL	EBT	EBR	WBL	WBT	WBR	NEL	NET	NER	SWL	SWT	SWR
Lane Configurations												
Volume (veh/h)	2	10	0	0	10	11	5	2325	21	0	0	0
Sign Control		Stop			Stop			Free			Free	
Grade		0%			0%			0%			0%	
Peak Hour Factor	0.93	0.93	0.93	0.93	0.93	0.93	0.93	0.93	0.93	0.93	0.93	0.93
Hourly flow rate (vph)	2	12	0	0	12	13	6	2775	25	0	0	0
Pedestrians												
Lane Width (ft)												
Walking Speed (ft/s)												
Percent Blockage												
Right turn flare (veh)												
Median type								None			None	
Median storage veh)												
Upstream signal (ft)												
pX, platoon unblocked												
vC, conflicting volume	956	2812	0	2805	2799	938	0			2800		
vC1, stage 1 conf vol												
vC2, stage 2 conf vol												
vCu, unblocked vol	956	2812	0	2805	2799	938	0			2800		
tC, single (s)	7.5	6.5	6.9	7.5	6.5	6.9	4.1			4.1		
tC, 2 stage (s)												
tF (s)	3.5	4.0	3.3	3.5	4.0	3.3	2.2			2.2		
p0 queue free %	97	33	100	100	34	95	100			100		
cM capacity (veh/h)	94	18	1084	4	18	266	1622			136		

Direction, Lane #	EB 1	WB 1	NE 1	NE 2	NE 3
Volume Total	14	25	700	1388	719
Volume Left	2	0	6	0	0
Volume Right	0	13	0	0	25
cSH	20	35	1622	1700	1700
Volume to Capacity	0.70	0.71	0.00	0.82	0.42
Queue Length 95th (ft)	49	62	0	0	0
Control Delay (s)	358.0	234.2	0.1	0.0	0.0
Lane LOS	F	F	A		
Approach Delay (s)	358.0	234.2	0.0		
Approach LOS	F	F			

Intersection Summary			
Average Delay	3.9		
Intersection Capacity Utilization	60.5%	ICU Level of Service	B
Analysis Period (min)	15		

HCM Unsignalized Intersection Capacity Analysis
1: SW 97th Ave. & SW 174th St.

2/11/2015

Movement	EBL	EBT	EBR	WBL	WBT	WBR	NBL	NBT	NBR	SBL	SBT	SBR
Lane Configurations												
Sign Control		Stop			Stop			Stop			Stop	
Volume (vph)	6	114	60	54	98	4	44	7	24	4	7	8
Peak Hour Factor	0.84	0.84	0.84	0.84	0.84	0.84	0.84	0.84	0.84	0.84	0.84	0.84
Hourly flow rate (vph)	8	151	79	71	130	5	58	9	32	5	9	11

Direction, Lane #	EB 1	WB 1	NB 1	SB 1
Volume Total (vph)	238	206	99	25
Volume Left (vph)	8	71	58	5
Volume Right (vph)	79	5	32	11
Hadj (s)	-0.16	0.09	-0.04	-0.18
Departure Headway (s)	4.3	4.6	4.9	4.9
Degree Utilization, x	0.28	0.26	0.13	0.03
Capacity (veh/h)	809	754	672	657
Control Delay (s)	9.0	9.2	8.7	8.0
Approach Delay (s)	9.0	9.2	8.7	8.0
Approach LOS	A	A	A	A

Intersection Summary			
Delay	9.0		
HCM Level of Service	A		
Intersection Capacity Utilization	41.5%	ICU Level of Service	A
Analysis Period (min)	15		

Lane Group	EBL	NBT	SBT	NET
Lane Group Flow (vph)	138	296	30	2339
v/c Ratio	0.71	0.61	0.09	0.79
Control Delay	77.2	18.9	48.2	24.7
Queue Delay	0.0	0.0	0.0	0.0
Total Delay	77.2	18.9	48.2	24.7
Queue Length 50th (ft)	118	52	22	560
Queue Length 95th (ft)	192	156	54	672
Internal Link Dist (ft)	257	1041	665	1300
Turn Bay Length (ft)				
Base Capacity (vph)	250	487	321	2965
Starvation Cap Reductn	0	0	0	0
Spillback Cap Reductn	0	0	0	0
Storage Cap Reductn	0	0	0	0
Reduced v/c Ratio	0.55	0.61	0.09	0.79

Intersection Summary

Movement	EBL	EBR	NBL	NBT	NBR	SBT	SBR	NEL2	NEL	NET	NER
Lane Configurations											
Volume (vph)	2	116	4	21	228	13	13	4	5	1968	25
Ideal Flow (vphpl)	1900	1900	1900	1900	1900	1900	1900	1900	1900	1900	1900
Total Lost time (s)	5.0			5.0		5.0				5.0	
Lane Util. Factor	1.00			1.00		1.00				0.91	
Frt	0.87			0.88		0.93				1.00	
Flt Protected	1.00			1.00		1.00				1.00	
Satd. Flow (prot)	1614			1635		1737				5075	
Flt Permitted	1.00			1.00		1.00				1.00	
Satd. Flow (perm)	1614			1631		1737				5075	
Peak-hour factor, PHF	0.95	0.95	0.95	0.95	0.95	0.95	0.95	0.95	0.95	0.95	0.95
Growth Factor (vph)	111%	111%	111%	111%	111%	111%	111%	111%	111%	111%	111%
Adj. Flow (vph)	2	136	5	25	266	15	15	5	6	2299	29
RTOR Reduction (vph)	0	0	0	186	0	0	0	0	0	1	0
Lane Group Flow (vph)	138	0	0	110	0	30	0	0	0	2338	0
Turn Type	NA		Perm	NA		NA		Perm	Perm	NA	
Protected Phases	3			4		8				6	
Permitted Phases			4					6	6		
Actuated Green, G (s)	16.3			25.0		25.0				79.1	
Effective Green, g (s)	16.3			25.0		25.0				79.1	
Actuated g/C Ratio	0.12			0.18		0.18				0.58	
Clearance Time (s)	5.0			5.0		5.0				5.0	
Vehicle Extension (s)	3.0			3.0		3.0				3.0	
Lane Grp Cap (vph)	194			301		321				2965	
v/s Ratio Prot	c0.09					0.02					
v/s Ratio Perm				c0.07						0.46	
v/c Ratio	0.71			0.37		0.09				0.79	
Uniform Delay, d1	57.3			48.3		45.8				21.7	
Progression Factor	1.00			1.00		1.00				1.00	
Incremental Delay, d2	11.6			3.4		0.6				2.2	
Delay (s)	68.9			51.7		46.4				23.9	
Level of Service	E			D		D				C	
Approach Delay (s)	68.9			51.7		46.4				23.9	
Approach LOS	E			D		D				C	

Intersection Summary			
HCM Average Control Delay	29.3	HCM Level of Service	C
HCM Volume to Capacity ratio	0.69		
Actuated Cycle Length (s)	135.4	Sum of lost time (s)	15.0
Intersection Capacity Utilization	84.5%	ICU Level of Service	E
Analysis Period (min)	15		

c Critical Lane Group

Movement	EBL	EBR	NBL	NBT	SBT	SBR
Lane Configurations						
Volume (veh/h)	6	32	28	264	140	5
Sign Control	Stop			Free	Free	
Grade	0%			0%	0%	
Peak Hour Factor	0.93	0.93	0.93	0.93	0.93	0.93
Hourly flow rate (vph)	7	38	33	315	167	6
Pedestrians						
Lane Width (ft)						
Walking Speed (ft/s)						
Percent Blockage						
Right turn flare (veh)						
Median type				None	None	
Median storage veh)						
Upstream signal (ft)					1121	
pX, platoon unblocked						
vC, conflicting volume	552	170	173			
vC1, stage 1 conf vol						
vC2, stage 2 conf vol						
vCu, unblocked vol	552	170	173			
tC, single (s)	6.4	6.2	4.1			
tC, 2 stage (s)						
tF (s)	3.5	3.3	2.2			
p0 queue free %	99	96	98			
cM capacity (veh/h)	483	874	1404			

Direction, Lane #	EB 1	NB 1	SB 1
Volume Total	45	349	173
Volume Left	7	33	0
Volume Right	38	0	6
cSH	775	1404	1700
Volume to Capacity	0.06	0.02	0.10
Queue Length 95th (ft)	5	2	0
Control Delay (s)	9.9	0.9	0.0
Lane LOS	A	A	
Approach Delay (s)	9.9	0.9	0.0
Approach LOS	A		

Intersection Summary			
Average Delay	1.4		
Intersection Capacity Utilization	39.0%	ICU Level of Service	A
Analysis Period (min)	15		

Movement	WBL	WBR	NBT	NBR	SBL	SBT
Lane Configurations						
Volume (veh/h)	39	32	268	11	24	136
Sign Control	Stop		Free			Free
Grade	0%		0%			0%
Peak Hour Factor	0.97	0.97	0.97	0.97	0.97	0.97
Hourly flow rate (vph)	45	37	307	13	27	156
Pedestrians						
Lane Width (ft)						
Walking Speed (ft/s)						
Percent Blockage						
Right turn flare (veh)						
Median type			None			None
Median storage veh)						
Upstream signal (ft)						
pX, platoon unblocked						
vC, conflicting volume	524	313			319	
vC1, stage 1 conf vol						
vC2, stage 2 conf vol						
vCu, unblocked vol	524	313			319	
tC, single (s)	6.4	6.2			4.1	
tC, 2 stage (s)						
tF (s)	3.5	3.3			2.2	
p0 queue free %	91	95			98	
cM capacity (veh/h)	503	727			1241	

Direction, Lane #	WB 1	NB 1	SB 1
Volume Total	81	319	183
Volume Left	45	0	27
Volume Right	37	13	0
cSH	584	1700	1241
Volume to Capacity	0.14	0.19	0.02
Queue Length 95th (ft)	12	0	2
Control Delay (s)	12.2	0.0	1.4
Lane LOS	B		A
Approach Delay (s)	12.2	0.0	1.4
Approach LOS	B		

Intersection Summary			
Average Delay	2.1		
Intersection Capacity Utilization	40.4%	ICU Level of Service	A
Analysis Period (min)	15		

Movement	EBL	EBR	NBL	NBT	SBT	SBR
Lane Configurations						
Volume (veh/h)	9	23	6	291	166	2
Sign Control	Stop			Free	Free	
Grade	0%			0%	0%	
Peak Hour Factor	0.94	0.94	0.94	0.94	0.94	0.94
Hourly flow rate (vph)	11	27	7	344	196	2
Pedestrians						
Lane Width (ft)						
Walking Speed (ft/s)						
Percent Blockage						
Right turn flare (veh)						
Median type				None	None	
Median storage veh)						
Upstream signal (ft)				1230		
pX, platoon unblocked	0.93					
vC, conflicting volume	555	197	198			
vC1, stage 1 conf vol						
vC2, stage 2 conf vol						
vCu, unblocked vol	483	197	198			
tC, single (s)	6.4	6.2	4.1			
tC, 2 stage (s)						
tF (s)	3.5	3.3	2.2			
p0 queue free %	98	97	99			
cM capacity (veh/h)	501	844	1374			

Direction, Lane #	EB 1	NB 1	SB 1
Volume Total	38	351	198
Volume Left	11	7	0
Volume Right	27	0	2
cSH	708	1374	1700
Volume to Capacity	0.05	0.01	0.12
Queue Length 95th (ft)	4	0	0
Control Delay (s)	10.4	0.2	0.0
Lane LOS	B	A	
Approach Delay (s)	10.4	0.2	0.0
Approach LOS	B		

Intersection Summary			
Average Delay	0.8		
Intersection Capacity Utilization	32.3%	ICU Level of Service	A
Analysis Period (min)	15		

Movement	EBL	EBT	EBR	WBL	WBT	WBR	NBL	NBT	NBR	SBL	SBT	SBR
Lane Configurations												
Volume (veh/h)	1	0	6	5	2	3	5	303	5	2	193	6
Sign Control		Stop			Stop			Free			Free	
Grade		0%			0%			0%			0%	
Peak Hour Factor	0.92	0.92	0.92	0.92	0.92	0.92	0.92	0.92	0.92	0.92	0.92	0.92
Hourly flow rate (vph)	1	0	7	6	2	4	6	366	6	2	233	7
Pedestrians												
Lane Width (ft)												
Walking Speed (ft/s)												
Percent Blockage												
Right turn flare (veh)												
Median type								None			None	
Median storage veh)												
Upstream signal (ft)								904				
pX, platoon unblocked	0.89	0.89		0.89	0.89	0.89				0.89		
vC, conflicting volume	627	625	236	629	626	369	240			372		
vC1, stage 1 conf vol												
vC2, stage 2 conf vol												
vCu, unblocked vol	523	521	236	526	522	234	240			238		
tC, single (s)	7.1	6.5	6.2	7.1	6.5	6.2	4.1			4.1		
tC, 2 stage (s)												
tF (s)	3.5	4.0	3.3	3.5	4.0	3.3	2.2			2.2		
p0 queue free %	100	100	99	99	99	99	100			100		
cM capacity (veh/h)	409	408	803	408	408	719	1327			1188		

Direction, Lane #	EB 1	WB 1	NB 1	SB 1
Volume Total	8	12	378	243
Volume Left	1	6	6	2
Volume Right	7	4	6	7
cSH	706	469	1327	1188
Volume to Capacity	0.01	0.03	0.00	0.00
Queue Length 95th (ft)	1	2	0	0
Control Delay (s)	10.2	12.9	0.2	0.1
Lane LOS	B	B	A	A
Approach Delay (s)	10.2	12.9	0.2	0.1
Approach LOS	B	B		

Intersection Summary			
Average Delay	0.5		
Intersection Capacity Utilization	31.5%	ICU Level of Service	A
Analysis Period (min)	15		

Movement	EBL	EBT	EBR	WBL	WBT	WBR	NBL	NBT	NBR	SBL	SBT	SBR
Lane Configurations												
Volume (veh/h)	0	0	2	1	1	2	2	311	1	1	211	2
Sign Control		Stop			Stop			Free			Free	
Grade		0%			0%			0%			0%	
Peak Hour Factor	0.95	0.95	0.95	0.95	0.95	0.95	0.95	0.95	0.95	0.95	0.95	0.95
Hourly flow rate (vph)	0	0	2	1	1	2	2	363	1	1	247	2
Pedestrians												
Lane Width (ft)												
Walking Speed (ft/s)												
Percent Blockage												
Right turn flare (veh)												
Median type								None			None	
Median storage veh)												
Upstream signal (ft)								601				
pX, platoon unblocked	0.89	0.89		0.89	0.89	0.89				0.89		
vC, conflicting volume	622	619	248	621	620	364	249			365		
vC1, stage 1 conf vol												
vC2, stage 2 conf vol												
vCu, unblocked vol	510	508	248	510	508	220	249			221		
tC, single (s)	7.1	6.5	6.2	7.1	6.5	6.2	4.1			4.1		
tC, 2 stage (s)												
tF (s)	3.5	4.0	3.3	3.5	4.0	3.3	2.2			2.2		
p0 queue free %	100	100	100	100	100	100	100			100		
cM capacity (veh/h)	417	414	791	419	414	727	1317			1197		

Direction, Lane #	EB 1	WB 1	NB 1	SB 1
Volume Total	2	5	367	250
Volume Left	0	1	2	1
Volume Right	2	2	1	2
cSH	791	530	1317	1197
Volume to Capacity	0.00	0.01	0.00	0.00
Queue Length 95th (ft)	0	1	0	0
Control Delay (s)	9.6	11.9	0.1	0.0
Lane LOS	A	B	A	A
Approach Delay (s)	9.6	11.9	0.1	0.0
Approach LOS	A	B		

Intersection Summary			
Average Delay	0.2		
Intersection Capacity Utilization	29.8%	ICU Level of Service	A
Analysis Period (min)	15		

Movement	EBL	EBT	EBR	WBL	WBT	WBR	NBL	NBT	NBR	SBL	SBT	SBR
Lane Configurations												
Volume (veh/h)	4	0	21	3	1	2	5	307	2	0	212	1
Sign Control		Stop			Stop			Free			Free	
Grade		0%			0%			0%			0%	
Peak Hour Factor	0.97	0.97	0.97	0.97	0.97	0.97	0.97	0.97	0.97	0.97	0.97	0.97
Hourly flow rate (vph)	5	0	24	3	1	2	6	351	2	0	243	1
Pedestrians												
Lane Width (ft)												
Walking Speed (ft/s)												
Percent Blockage												
Right turn flare (veh)												
Median type								None			None	
Median storage veh)												
Upstream signal (ft)								300				
pX, platoon unblocked	0.88	0.88		0.88	0.88	0.88				0.88		
vC, conflicting volume	610	608	243	631	608	352	244			354		
vC1, stage 1 conf vol												
vC2, stage 2 conf vol												
vCu, unblocked vol	491	489	243	515	488	199	244			200		
tC, single (s)	7.1	6.5	6.2	7.1	6.5	6.2	4.1			4.1		
tC, 2 stage (s)												
tF (s)	3.5	4.0	3.3	3.5	4.0	3.3	2.2			2.2		
p0 queue free %	99	100	97	99	100	100	100			100		
cM capacity (veh/h)	427	421	796	401	422	743	1323			1210		

Direction, Lane #	EB 1	WB 1	NB 1	SB 1
Volume Total	29	7	359	244
Volume Left	5	3	6	0
Volume Right	24	2	2	1
cSH	699	478	1323	1210
Volume to Capacity	0.04	0.01	0.00	0.00
Queue Length 95th (ft)	3	1	0	0
Control Delay (s)	10.4	12.6	0.2	0.0
Lane LOS	B	B	A	
Approach Delay (s)	10.4	12.6	0.2	0.0
Approach LOS	B	B		

Intersection Summary			
Average Delay	0.7		
Intersection Capacity Utilization	32.5%	ICU Level of Service	A
Analysis Period (min)	15		

Lane Group	EBL	EBT	EBR	WBL	WBT	NBL	NBT	SBL	SBT
Lane Group Flow (vph)	74	406	65	91	477	134	310	26	245
v/c Ratio	0.14	0.68	0.15	0.19	0.40	0.28	0.42	0.07	0.38
Control Delay	12.3	31.6	8.2	12.8	24.0	22.4	31.8	20.8	33.7
Queue Delay	0.0	0.0	0.0	0.0	0.0	0.0	0.0	0.0	0.0
Total Delay	12.3	31.6	8.2	12.8	24.0	22.4	31.8	20.8	33.7
Queue Length 50th (ft)	21	174	0	26	113	52	75	10	63
Queue Length 95th (ft)	46	284	32	55	170	109	129	30	112
Internal Link Dist (ft)		1915			422		229		156
Turn Bay Length (ft)	130			95		155		130	
Base Capacity (vph)	570	888	683	476	1746	471	1077	400	977
Starvation Cap Reductn	0	0	0	0	0	0	0	0	0
Spillback Cap Reductn	0	0	0	0	0	0	0	0	0
Storage Cap Reductn	0	0	0	0	0	0	0	0	0
Reduced v/c Ratio	0.13	0.46	0.10	0.19	0.27	0.28	0.29	0.07	0.25

Intersection Summary

Movement	EBL	EBT	EBR	WBL	WBT	WBR	NBL	NBT	NBR	SBL	SBT	SBR
Lane Configurations												
Volume (vph)	61	333	53	75	374	17	110	217	37	21	168	33
Ideal Flow (vphpl)	1900	1900	1900	1900	1900	1900	1900	1900	1900	1900	1900	1900
Total Lost time (s)	3.0	3.0	5.0	3.0	3.0		3.0	3.0		3.0	3.0	
Lane Util. Factor	1.00	1.00	1.00	1.00	0.95		1.00	0.95		1.00	0.95	
Frt	1.00	1.00	0.85	1.00	0.99		1.00	0.98		1.00	0.98	
Flt Protected	0.95	1.00	1.00	0.95	1.00		0.95	1.00		0.95	1.00	
Satd. Flow (prot)	1770	1863	1583	1770	3516		1770	3462		1770	3453	
Flt Permitted	0.47	1.00	1.00	0.47	1.00		0.60	1.00		0.56	1.00	
Satd. Flow (perm)	873	1863	1583	884	3516		1117	3462		1049	3453	
Peak-hour factor, PHF	0.91	0.91	0.91	0.91	0.91	0.91	0.91	0.91	0.91	0.91	0.91	0.91
Growth Factor (vph)	111%	111%	111%	111%	111%	111%	111%	111%	111%	111%	111%	111%
Adj. Flow (vph)	74	406	65	91	456	21	134	265	45	26	205	40
RTOR Reduction (vph)	0	0	49	0	3	0	0	12	0	0	15	0
Lane Group Flow (vph)	74	406	16	91	474	0	134	298	0	26	230	0
Turn Type	custom	NA	custom	custom	NA		custom	NA		custom	NA	
Protected Phases	1 2	2 4		1 3	3 4		5 6	6 8		5 7	7 8	
Permitted Phases	4		4	4			8			8		
Actuated Green, G (s)	37.1	27.1	22.9	33.6	29.6		27.1	15.5		21.4	15.8	
Effective Green, g (s)	37.1	27.1	22.9	33.6	29.6		27.1	15.5		21.4	15.8	
Actuated g/C Ratio	0.40	0.29	0.25	0.36	0.32		0.29	0.17		0.23	0.17	
Clearance Time (s)			5.0									
Vehicle Extension (s)			3.0									
Lane Grp Cap (vph)	488	546	392	424	1125		447	580		330	590	
v/s Ratio Prot	0.02	c0.22		c0.02	c0.13		c0.05	c0.09		0.01	c0.07	
v/s Ratio Perm	0.04		0.01	0.05			0.03			0.01		
v/c Ratio	0.15	0.74	0.04	0.21	0.42		0.30	0.51		0.08	0.39	
Uniform Delay, d1	17.3	29.6	26.5	19.8	24.7		25.0	35.1		27.7	34.1	
Progression Factor	1.00	1.00	1.00	1.00	1.00		1.00	1.00		1.00	1.00	
Incremental Delay, d2	0.1	5.4	0.0	0.3	0.3		0.4	0.8		0.1	0.4	
Delay (s)	17.5	35.0	26.5	20.1	25.0		25.4	35.8		27.8	34.5	
Level of Service	B	D	C	C	C		C	D		C	C	
Approach Delay (s)		31.6			24.2			32.7			33.9	
Approach LOS		C			C			C			C	

Intersection Summary			
HCM Average Control Delay	29.9	HCM Level of Service	C
HCM Volume to Capacity ratio	0.52		
Actuated Cycle Length (s)	92.5	Sum of lost time (s)	24.0
Intersection Capacity Utilization	50.5%	ICU Level of Service	A
Analysis Period (min)	15		

c Critical Lane Group

Movement	EBL	EBT	WBT	WBR	SBL	SBR
Lane Configurations						
Volume (veh/h)	3	403	477	8	6	1
Sign Control		Free	Free		Stop	
Grade		0%	0%		0%	
Peak Hour Factor	0.94	0.94	0.94	0.94	0.94	0.94
Hourly flow rate (vph)	4	476	563	9	7	1
Pedestrians						
Lane Width (ft)						
Walking Speed (ft/s)						
Percent Blockage						
Right turn flare (veh)						
Median type		None	None			
Median storage veh)						
Upstream signal (ft)		502				
pX, platoon unblocked					0.80	
vC, conflicting volume	573				1051	568
vC1, stage 1 conf vol						
vC2, stage 2 conf vol						
vCu, unblocked vol	573				938	568
tC, single (s)	4.1				6.4	6.2
tC, 2 stage (s)						
tF (s)	2.2				3.5	3.3
p0 queue free %	100				97	100
cM capacity (veh/h)	1000				234	522

Direction, Lane #	EB 1	EB 2	WB 1	SB 1
Volume Total	4	476	573	8
Volume Left	4	0	0	7
Volume Right	0	0	9	1
cSH	1000	1700	1700	254
Volume to Capacity	0.00	0.28	0.34	0.03
Queue Length 95th (ft)	0	0	0	3
Control Delay (s)	8.6	0.0	0.0	19.7
Lane LOS	A			C
Approach Delay (s)	0.1		0.0	19.7
Approach LOS				C

Intersection Summary			
Average Delay	0.2		
Intersection Capacity Utilization	38.4%	ICU Level of Service	A
Analysis Period (min)	15		

Lane Group	EBL	EBT	WBL	WBT	NBL	NBT	SBL	SBT
Lane Group Flow (vph)	302	467	262	537	136	1792	208	2083
v/c Ratio	0.91	0.71	0.92	0.91	0.86	0.87	0.90	0.93
Control Delay	86.5	55.7	92.9	76.4	70.8	43.4	73.5	44.0
Queue Delay	0.0	0.0	0.0	0.0	0.0	0.0	0.0	0.0
Total Delay	86.5	55.7	92.9	76.4	70.8	43.4	73.5	44.0
Queue Length 50th (ft)	271	197	260	265	71	549	136	647
Queue Length 95th (ft)	#437	260	#442	#371	#198	618	#286	721
Internal Link Dist (ft)		364		1915		469		768
Turn Bay Length (ft)			286		160		130	
Base Capacity (vph)	347	692	293	608	159	2055	236	2266
Starvation Cap Reductn	0	0	0	0	0	0	0	0
Spillback Cap Reductn	0	0	0	0	0	0	0	0
Storage Cap Reductn	0	0	0	0	0	0	0	0
Reduced v/c Ratio	0.87	0.67	0.89	0.88	0.86	0.87	0.88	0.92

Intersection Summary

95th percentile volume exceeds capacity, queue may be longer.
Queue shown is maximum after two cycles.

Movement	EBL	EBT	EBR	WBL	WBT	WBR	NBL	NBT	NBR	SBL	SBT	SBR
Lane Configurations												
Volume (vph)	256	296	99	321	340	16	115	1405	113	176	1558	206
Ideal Flow (vphpl)	1900	1900	1900	1900	1900	1900	1900	1900	1900	1900	1900	1900
Total Lost time (s)	5.0	5.0		5.0	5.0		3.0	5.0		3.0	5.0	
Lane Util. Factor	1.00	0.95		0.91	0.91		1.00	0.91		1.00	0.91	
Frt	1.00	0.96		1.00	0.99		1.00	0.99		1.00	0.98	
Flt Protected	0.95	1.00		0.95	0.99		0.95	1.00		0.95	1.00	
Satd. Flow (prot)	1770	3406		1610	3336		1770	5029		1770	4996	
Flt Permitted	0.95	1.00		0.95	0.99		0.07	1.00		0.07	1.00	
Satd. Flow (perm)	1770	3406		1610	3336		133	5029		126	4996	
Peak-hour factor, PHF	0.94	0.94	0.94	0.94	0.94	0.94	0.94	0.94	0.94	0.94	0.94	0.94
Growth Factor (vph)	111%	111%	111%	111%	111%	111%	111%	111%	111%	111%	111%	111%
Adj. Flow (vph)	302	350	117	379	401	19	136	1659	133	208	1840	243
RTOR Reduction (vph)	0	24	0	0	2	0	0	7	0	0	12	0
Lane Group Flow (vph)	302	443	0	262	535	0	136	1785	0	208	2071	0
Turn Type	Split	NA		Split	NA		pm+pt	NA		pm+pt	NA	
Protected Phases	4	4		8	8		5	2		1	6	
Permitted Phases							2			6		
Actuated Green, G (s)	25.8	25.8		24.2	24.2		64.1	56.1		72.7	61.7	
Effective Green, g (s)	25.8	25.8		24.2	24.2		64.1	56.1		72.7	61.7	
Actuated g/C Ratio	0.19	0.19		0.18	0.18		0.47	0.41		0.53	0.45	
Clearance Time (s)	5.0	5.0		5.0	5.0		3.0	5.0		3.0	5.0	
Vehicle Extension (s)	3.0	3.0		3.0	3.0		3.0	3.0		3.0	3.0	
Lane Grp Cap (vph)	332	638		283	586		157	2049		229	2239	
v/s Ratio Prot	c0.17	0.13		c0.16	0.16		0.05	0.36		c0.09	c0.41	
v/s Ratio Perm							0.35			0.39		
v/c Ratio	0.91	0.70		0.93	0.91		0.87	0.87		0.91	0.92	
Uniform Delay, d1	54.8	52.3		55.9	55.7		31.4	37.5		40.9	35.8	
Progression Factor	1.00	1.00		1.00	1.00		1.00	1.00		1.00	1.00	
Incremental Delay, d2	27.4	3.3		34.2	18.8		36.0	5.4		35.3	7.1	
Delay (s)	82.2	55.6		90.1	74.5		67.4	42.9		76.2	42.9	
Level of Service	F	E		F	E		E	D		E	D	
Approach Delay (s)		66.0			79.6			44.7			46.0	
Approach LOS		E			E			D			D	

Intersection Summary			
HCM Average Control Delay	52.8	HCM Level of Service	D
HCM Volume to Capacity ratio	0.90		
Actuated Cycle Length (s)	137.7	Sum of lost time (s)	13.0
Intersection Capacity Utilization	91.4%	ICU Level of Service	F
Analysis Period (min)	15		

c Critical Lane Group

Movement	EBL	EBT	EBR	WBL	WBT	WBR	NBL	NBT	NBR	SBL	SBT	SBR
Lane Configurations												
Volume (vph)	256	296	99	321	340	16	115	1405	113	176	1558	206
Movement Number	7	4	14	3	8	18	5	2	12	1	6	16
Initial Queue, veh	0	0	0	0	0	0	0	0	0	0	0	0
Ped-Bike Adj. Factor (A_pbT)	1.00		1.00	1.00		1.00	1.00		1.00	1.00		1.00
Parking, Bus Adj. Factors	1.00	1.00	1.00	1.00	1.00	1.00	1.00	1.00	1.00	1.00	1.00	1.00
Adj. Sat. Flow Rate, veh/h/ln	1863	1863	1863	1863	1863	1863	1863	1863	1863	1863	1863	1863
Lanes	1	2	0	1	2	0	1	3	0	1	3	0
Lane Assignment												
Capacity, veh/h	310	469	154	337	671	31	180	2044	164	235	2024	267
Proportion Arriving On Green	0.17	0.17	0.17	0.19	0.19	0.19	0.05	0.43	0.43	0.07	0.45	0.45
Movement Delay, s/veh	71.9	54.1	55.2	105.4	49.6	49.7	37.6	34.8	37.6	38.3	35.1	38.3
Movement LOS	E	D	E	F	D	D	D	C	D	D	D	D
Approach Volume, veh/h		693			720			1737			2064	
Approach Delay, s/veh		61.4			76.1			35.9			36.4	
Approach LOS		E			E			D			D	

Timer:	1	2	3	4	5	6	7	8
Assigned Phase	1	2	8	4	5	6		
Case No	1.1	4.0	10.0	10.0	1.1	4.0		
Phase Duration (G+Y+Rc), s	12.52	61.00	30.00	27.95	10.02	63.51		
Change Period (Y+Rc), s	3.00	5.00	5.00	5.00	3.00	5.00		
Max. Allowable Headway (MAH), s	4.00	3.94	3.96	3.99	4.00	3.94		
Maximum Green Setting (Gmax), s	14.00	56.00	25.00	27.00	8.00	62.00		
Max. Queue Clearance Time (g_c+I1), s	9.31	36.16	27.00	21.68	7.07	44.07		
Green Extension Time (g_e), s	0.23	15.55	0.00	1.27	0.03	14.32		
Probability of Phase Call (p_c)	0.999	1.000	1.000	1.000	0.989	1.000		
Probability of Max Out (p_x)	0.594	0.767	1.000	0.660	1.000	0.792		

Left-Turn Movement Data					
Assigned Movement	1		3	7	5
Mvmt. Sat Flow, veh/h	1774.04		1774.04	1774.04	1774.04

Through Movement Data					
Assigned Movement		2	8	4	6
Mvmt. Sat Flow, veh/h		4798.99	3530.63	2687.70	4547.94

Right-Turn Movement Data					
Assigned Movement		12	18	14	16
Mvmt. Sat Flow, veh/h		385.86	165.63	882.12	599.25

Left Lane Group Data								
Assigned Movement	1	0	3	7	5	0	0	0
Lane Assignment	L (Pr/Pm)		L		LL (Pr/Pm)			
Lanes in Group	1	0	1	1	1	0	0	0
Group Volume (v), veh/h	187.2	0.0	341.5	272.3	122.3	0.0	0.0	0.0
Group Sat. Flow (s), veh/h/ln	1774.0	0.0	1774.0	1774.0	1774.0	0.0	0.0	0.0
Queue Serve Time (g_s), s	7.3	0.0	25.0	19.7	5.1	0.0	0.0	0.0
Cycle Queue Clear Time (g_c), s	7.3	0.0	25.0	19.7	5.1	0.0	0.0	0.0

Perm LT Sat Flow Rate (s_l), veh/h/ln	311.9	0.0	1774.0	1774.0	241.9	0.0	0.0	0.0
Shared LT Sat Flow (s_sh), veh/h/ln	0.0	0.0	0.0	0.0	0.0	0.0	0.0	0.0
Perm LT Eff. Green (g_p), s	60.0	0.0	0.0	0.0	56.0	0.0	0.0	0.0
Perm LT Serve Time (g_u), s	21.8	0.0	0.0	0.0	16.4	0.0	0.0	0.0
Perm LT Que Serve Time (g_ps), s	21.8	0.0	0.0	0.0	16.4	0.0	0.0	0.0
Time to First Blk (g_f), s	0.0	0.0	0.0	0.0	0.0	0.0	0.0	0.0
Serve Time pre Blk (g_fs), s	0.0	0.0	0.0	0.0	0.0	0.0	0.0	0.0
Proportion LT Inside Lane (P_L)	1.000	0.000	1.000	1.000	1.000	0.000	0.000	0.000
Lane Group Capacity (c), veh/h	235.1	0.0	337.3	309.7	179.7	0.0	0.0	0.0
Volume-to-Capacity Ratio (X)	0.796	0.000	1.012	0.879	0.681	0.000	0.000	0.000
Available Capacity (c_a), veh/h	295.5	0.0	337.3	364.3	193.0	0.0	0.0	0.0
Upstream Filter Factor (I)	1.000	0.000	1.000	1.000	1.000	0.000	0.000	0.000
Uniform Delay (d1), s/veh	27.0	0.0	53.2	52.9	29.0	0.0	0.0	0.0
Incremental Delay (d2), s/veh	11.3	0.0	52.2	19.0	8.6	0.0	0.0	0.0
Initial Queue Delay (d3), s/veh	0.0	0.0	0.0	0.0	0.0	0.0	0.0	0.0
Control Delay (d), s/veh	38.3	0.0	105.4	71.9	37.6	0.0	0.0	0.0
First-Term Queue (Q1), veh/ln	3.1	0.0	11.1	8.8	2.1	0.0	0.0	0.0
Second-Term Queue (Q2), veh/ln	0.7	0.0	4.9	1.6	0.4	0.0	0.0	0.0
Third-Term Queue (Q3), veh/ln	0.0	0.0	0.0	0.0	0.0	0.0	0.0	0.0
Percentile bk-of-que factor (f_B%)	1.000	0.000	1.000	1.000	1.000	0.000	0.000	0.000
Percentile Back of Queue (Q%), veh/ln	3.9	0.0	16.0	10.4	2.5	0.0	0.0	0.0
Percentile Storage Ratio (RQ%)	0.75	0.00	1.42	0.77	0.40	0.00	0.00	0.00
Initial Queue (Qb), veh	0.0	0.0	0.0	0.0	0.0	0.0	0.0	0.0
Final (Residual) Queue (Qe), veh	0.0	0.0	1.0	0.0	0.0	0.0	0.0	0.0
Saturated Delay (ds), s/veh	0.0	0.0	0.0	0.0	0.0	0.0	0.0	0.0
Saturated Queue (Qs), veh	0.0	0.0	0.0	0.0	0.0	0.0	0.0	0.0
Saturated Capacity (cs), veh/h	0.0	0.0	0.0	0.0	0.0	0.0	0.0	0.0
Initial Queue Clear Time (tc), h	0.0	0.0	0.3	0.0	0.0	0.0	0.0	0.0
Middle Lane Group Data								
Assigned Movement	0	2	8	4	0	6	0	0
Lane Assignment		T	T	T		T		
Lanes in Group	0	2	1	1	0	2	0	0
Group Volume (v), veh/h	0.0	1055.8	190.3	216.4	0.0	1234.1	0.0	0.0
Group Sat. Flow (s), veh/h/ln	0.0	1695.1	1862.7	1862.7	0.0	1695.1	0.0	0.0
Queue Serve Time (g_s), s	0.0	34.1	12.1	14.3	0.0	41.8	0.0	0.0
Cycle Queue Clear Time (g_c), s	0.0	34.1	12.1	14.3	0.0	41.8	0.0	0.0
Lane Group Capacity (c), veh/h	0.0	1444.0	354.2	325.2	0.0	1508.6	0.0	0.0
Volume-to-Capacity Ratio (X)	0.000	0.731	0.537	0.665	0.000	0.818	0.000	0.000
Available Capacity (c_a), veh/h	0.0	1444.0	354.2	382.5	0.0	1598.7	0.0	0.0
Upstream Filter Factor (I)	0.000	1.000	1.000	1.000	0.000	1.000	0.000	0.000
Uniform Delay (d1), s/veh	0.0	31.5	48.0	50.7	0.0	31.8	0.0	0.0
Incremental Delay (d2), s/veh	0.0	3.3	1.6	3.4	0.0	3.3	0.0	0.0
Initial Queue Delay (d3), s/veh	0.0	0.0	0.0	0.0	0.0	0.0	0.0	0.0
Control Delay (d), s/veh	0.0	34.8	49.6	54.1	0.0	35.1	0.0	0.0
First-Term Queue (Q1), veh/ln	0.0	13.9	5.7	6.7	0.0	16.9	0.0	0.0
Second-Term Queue (Q2), veh/ln	0.0	0.7	0.2	0.3	0.0	0.7	0.0	0.0
Third-Term Queue (Q3), veh/ln	0.0	0.0	0.0	0.0	0.0	0.0	0.0	0.0
Percentile bk-of-que factor (f_B%)	0.000	1.000	1.000	1.000	0.000	1.000	0.000	0.000
Percentile Back of Queue (Q%), veh/ln	0.0	14.5	5.8	7.0	0.0	17.6	0.0	0.0
Percentile Storage Ratio (RQ%)	0.00	0.81	0.08	0.51	0.00	0.61	0.00	0.00

Initial Queue (Qb), veh	0.0	0.0	0.0	0.0	0.0	0.0	0.0	0.0
Final (Residual) Queue (Qe), veh	0.0	0.0	0.0	0.0	0.0	0.0	0.0	0.0
Saturated Delay (ds), s/veh	0.0	0.0	0.0	0.0	0.0	0.0	0.0	0.0
Saturated Queue (Qs), veh	0.0	0.0	0.0	0.0	0.0	0.0	0.0	0.0
Saturated Capacity (cs), veh/h	0.0	0.0	0.0	0.0	0.0	0.0	0.0	0.0
Initial Queue Clear Time (tc), h	0.0	0.0	0.0	0.0	0.0	0.0	0.0	0.0
Right Lane Group Data								
Assigned Movement	0	12	18	14	0	16	0	0
Lane Assignment		T+R	T+R	T+R		T+R		
Lanes in Group	0	1	1	1	0	1	0	0
Group Volume (v), veh/h	0.0	559.1	188.4	203.8	0.0	642.5	0.0	0.0
Group Sat. Flow (s), veh/h/ln	0.0	1794.7	1833.5	1707.1	0.0	1757.0	0.0	0.0
Queue Serve Time (g_s), s	0.0	34.2	12.2	14.7	0.0	42.1	0.0	0.0
Cycle Queue Clear Time (g_c), s	0.0	34.2	12.2	14.7	0.0	42.1	0.0	0.0
Prot RT Sat Flow Rate (s_R), veh/h/ln	0.0	0.0	0.0	0.0	0.0	0.0	0.0	0.0
Prot RT Eff. Green (g_R), s	0.0	0.0	0.0	0.0	0.0	0.0	0.0	0.0
Proportion RT Outside Lane (P_R)	0.000	0.215	0.090	0.517	0.000	0.341	0.000	0.000
Lane Group Capacity (c), veh/h	0.0	764.4	348.6	298.0	0.0	781.9	0.0	0.0
Volume-to-Capacity Ratio (X)	0.000	0.731	0.540	0.684	0.000	0.822	0.000	0.000
Available Capacity (c_a), veh/h	0.0	764.4	348.6	350.6	0.0	828.6	0.0	0.0
Upstream Filter Factor (I)	0.000	1.000	1.000	1.000	0.000	1.000	0.000	0.000
Uniform Delay (d1), s/veh	0.0	31.5	48.1	50.9	0.0	31.9	0.0	0.0
Incremental Delay (d2), s/veh	0.0	6.1	1.7	4.4	0.0	6.4	0.0	0.0
Initial Queue Delay (d3), s/veh	0.0	0.0	0.0	0.0	0.0	0.0	0.0	0.0
Control Delay (d), s/veh	0.0	37.6	49.7	55.2	0.0	38.3	0.0	0.0
First-Term Queue (Q1), veh/ln	0.0	14.7	5.6	6.3	0.0	17.6	0.0	0.0
Second-Term Queue (Q2), veh/ln	0.0	1.3	0.2	0.4	0.0	1.4	0.0	0.0
Third-Term Queue (Q3), veh/ln	0.0	0.0	0.0	0.0	0.0	0.0	0.0	0.0
Percentile bk-of-que factor (f_B%)	0.000	1.000	1.000	1.000	0.000	1.000	0.000	0.000
Percentile Back of Queue (Q%), veh/ln	0.0	16.0	5.8	6.7	0.0	19.0	0.0	0.0
Percentile Storage Ratio (RQ%)	0.00	0.89	0.08	0.49	0.00	0.66	0.00	0.00
Initial Queue (Qb), veh	0.0	0.0	0.0	0.0	0.0	0.0	0.0	0.0
Final (Residual) Queue (Qe), veh	0.0	0.0	0.0	0.0	0.0	0.0	0.0	0.0
Saturated Delay (ds), s/veh	0.0	0.0	0.0	0.0	0.0	0.0	0.0	0.0
Saturated Queue (Qs), veh	0.0	0.0	0.0	0.0	0.0	0.0	0.0	0.0
Saturated Capacity (cs), veh/h	0.0	0.0	0.0	0.0	0.0	0.0	0.0	0.0
Initial Queue Clear Time (tc), h	0.0	0.0	0.0	0.0	0.0	0.0	0.0	0.0
Intersection Summary								
HCM Average Control Delay		45.0						
HCM Level of Service		D						

Movement	EBL	EBT	EBR	WBL	WBT	WBR	NEL	NET	NER	SWL	SWT	SWR
Lane Configurations												
Volume (veh/h)	33	5	0	0	4	11	58	1866	19	0	0	0
Sign Control		Stop			Stop			Free			Free	
Grade		0%			0%			0%			0%	
Peak Hour Factor	0.95	0.95	0.95	0.95	0.95	0.95	0.95	0.95	0.95	0.95	0.95	0.95
Hourly flow rate (vph)	39	6	0	0	5	13	68	2180	22	0	0	0
Pedestrians												
Lane Width (ft)												
Walking Speed (ft/s)												
Percent Blockage												
Right turn flare (veh)												
Median type								None			None	
Median storage veh)												
Upstream signal (ft)												
pX, platoon unblocked												
vC, conflicting volume	877	2338	0	2330	2327	738	0			2202		
vC1, stage 1 conf vol												
vC2, stage 2 conf vol												
vCu, unblocked vol	877	2338	0	2330	2327	738	0			2202		
tC, single (s)	7.5	6.5	6.9	7.5	6.5	6.9	4.1			4.1		
tC, 2 stage (s)												
tF (s)	3.5	4.0	3.3	3.5	4.0	3.3	2.2			2.2		
p0 queue free %	81	83	100	100	87	96	96			100		
cM capacity (veh/h)	203	35	1084	17	35	360	1622			236		

Direction, Lane #	EB 1	WB 1	NE 1	NE 2	NE 3
Volume Total	44	18	613	1090	567
Volume Left	39	0	68	0	0
Volume Right	0	13	0	0	22
cSH	124	104	1622	1700	1700
Volume to Capacity	0.36	0.17	0.04	0.64	0.33
Queue Length 95th (ft)	37	14	3	0	0
Control Delay (s)	49.5	46.5	1.2	0.0	0.0
Lane LOS	E	E	A		
Approach Delay (s)	49.5	46.5	0.3		
Approach LOS	E	E			

Intersection Summary			
Average Delay	1.6		
Intersection Capacity Utilization	57.4%	ICU Level of Service	B
Analysis Period (min)	15		

Movement	EBL	EBT	EBR	WBL	WBT	WBR	NEL	NET	NER	SWL	SWT	SWR
Lane Configurations												
Volume (veh/h)	0	4	0	0	4	0	2	2038	4	0	0	0
Sign Control		Stop			Stop			Free			Free	
Grade		0%			0%			0%			0%	
Peak Hour Factor	0.89	0.89	0.89	0.89	0.89	0.89	0.89	0.89	0.89	0.89	0.89	0.89
Hourly flow rate (vph)	0	5	0	0	5	0	2	2542	5	0	0	0
Pedestrians												
Lane Width (ft)												
Walking Speed (ft/s)												
Percent Blockage												
Right turn flare (veh)												
Median type								None			None	
Median storage veh)												
Upstream signal (ft)												
pX, platoon unblocked												
vC, conflicting volume	855	2552	0	2552	2549	850	0			2547		
vC1, stage 1 conf vol												
vC2, stage 2 conf vol												
vCu, unblocked vol	855	2552	0	2552	2549	850	0			2547		
tC, single (s)	7.5	6.5	6.9	7.5	6.5	6.9	4.1			4.1		
tC, 2 stage (s)												
tF (s)	3.5	4.0	3.3	3.5	4.0	3.3	2.2			2.2		
p0 queue free %	100	81	100	100	81	100	100			100		
cM capacity (veh/h)	215	26	1084	11	26	304	1622			172		

Direction, Lane #	EB 1	WB 1	NE 1	NE 2	NE 3
Volume Total	5	5	638	1271	640
Volume Left	0	0	2	0	0
Volume Right	0	0	0	0	5
cSH	26	26	1622	1700	1700
Volume to Capacity	0.19	0.19	0.00	0.75	0.38
Queue Length 95th (ft)	14	14	0	0	0
Control Delay (s)	172.0	171.3	0.0	0.0	0.0
Lane LOS	F	F	A		
Approach Delay (s)	172.0	171.3	0.0		
Approach LOS	F	F			

Intersection Summary			
Average Delay	0.7		
Intersection Capacity Utilization	53.9%	ICU Level of Service	A
Analysis Period (min)	15		

HCM Unsignalized Intersection Capacity Analysis
1: SW 97th Ave. & SW 174th St.

2/11/2015

Movement	EBL	EBT	EBR	WBL	WBT	WBR	NBL	NBT	NBR	SBL	SBT	SBR
Lane Configurations												
Sign Control		Stop			Stop			Stop			Stop	
Volume (vph)	5	124	74	61	134	1	56	9	25	3	2	7
Peak Hour Factor	0.90	0.90	0.90	0.90	0.90	0.90	0.90	0.90	0.90	0.90	0.90	0.90
Hourly flow rate (vph)	6	153	91	75	165	1	69	11	31	4	2	9

Direction, Lane #	EB 1	WB 1	NB 1	SB 1
Volume Total (vph)	250	242	111	15
Volume Left (vph)	6	75	69	4
Volume Right (vph)	91	1	31	9
Hadj (s)	-0.18	0.09	-0.01	-0.27
Departure Headway (s)	4.3	4.6	5.0	4.9
Degree Utilization, x	0.30	0.31	0.16	0.02
Capacity (veh/h)	801	750	653	641
Control Delay (s)	9.2	9.6	8.9	8.0
Approach Delay (s)	9.2	9.6	8.9	8.0
Approach LOS	A	A	A	A

Intersection Summary			
Delay	9.3		
HCM Level of Service	A		
Intersection Capacity Utilization	46.5%	ICU Level of Service	A
Analysis Period (min)	15		

Lane Group	EBL	NBT	SBT	NET
Lane Group Flow (vph)	136	336	81	2484
v/c Ratio	0.77	0.64	0.20	0.84
Control Delay	106.7	30.3	60.2	35.7
Queue Delay	0.0	0.0	0.0	0.0
Total Delay	106.7	30.3	60.2	35.7
Queue Length 50th (ft)	163	145	81	889
Queue Length 95th (ft)	248	273	139	1011
Internal Link Dist (ft)	257	1041	665	1300
Turn Bay Length (ft)				
Base Capacity (vph)	228	529	406	2944
Starvation Cap Reductn	0	0	0	0
Spillback Cap Reductn	0	0	0	0
Storage Cap Reductn	0	0	0	0
Reduced v/c Ratio	0.60	0.64	0.20	0.84

Intersection Summary

Movement	EBL	EBR	NBL	NBT	NBR	SBT	SBR	NEL2	NEL	NET	NER
Lane Configurations											
Volume (vph)	4	113	7	15	269	47	23	4	19	2085	40
Ideal Flow (vphpl)	1900	1900	1900	1900	1900	1900	1900	1900	1900	1900	1900
Total Lost time (s)	5.0			5.0		5.0				5.0	
Lane Util. Factor	1.00			1.00		1.00				0.91	
Frt	0.87			0.88		0.95				1.00	
Flt Protected	1.00			1.00		1.00				1.00	
Satd. Flow (prot)	1618			1628		1779				5068	
Flt Permitted	1.00			0.99		1.00				1.00	
Satd. Flow (perm)	1618			1620		1779				5068	
Peak-hour factor, PHF	0.96	0.96	0.96	0.96	0.96	0.96	0.96	0.96	0.96	0.96	0.96
Growth Factor (vph)	111%	111%	111%	111%	111%	111%	111%	111%	111%	111%	111%
Adj. Flow (vph)	5	131	8	17	311	54	27	5	22	2411	46
RTOR Reduction (vph)	0	0	0	159	0	0	0	0	0	1	0
Lane Group Flow (vph)	136	0	0	177	0	81	0	0	0	2483	0
Parking (#/hr)		0									
Turn Type	NA		Perm	NA		NA		Perm	Perm	NA	
Protected Phases	3			4		8				6	
Permitted Phases			4					6	6		
Actuated Green, G (s)	20.2			42.0		42.0				107.1	
Effective Green, g (s)	20.2			42.0		42.0				107.1	
Actuated g/C Ratio	0.11			0.23		0.23				0.58	
Clearance Time (s)	5.0			5.0		5.0				5.0	
Vehicle Extension (s)	3.0			3.0		3.0				3.0	
Lane Grp Cap (vph)	177			369		405				2945	
v/s Ratio Prot	c0.08					0.05					
v/s Ratio Perm				c0.11						0.49	
v/c Ratio	0.77			0.48		0.20				0.84	
Uniform Delay, d1	79.8			61.7		57.6				31.7	
Progression Factor	1.00			1.00		1.00				1.00	
Incremental Delay, d2	18.0			4.4		1.1				3.1	
Delay (s)	97.7			66.1		58.7				34.8	
Level of Service	F			E		E				C	
Approach Delay (s)	97.7			66.1		58.7				34.8	
Approach LOS	F			E		E				C	

Intersection Summary			
HCM Average Control Delay	41.8	HCM Level of Service	D
HCM Volume to Capacity ratio	0.74		
Actuated Cycle Length (s)	184.3	Sum of lost time (s)	15.0
Intersection Capacity Utilization	93.2%	ICU Level of Service	F
Analysis Period (min)	15		
c Critical Lane Group			

Movement	EBL	EBR	NBL	NBT	SBT	SBR
Lane Configurations						
Volume (veh/h)	5	74	19	269	203	9
Sign Control	Stop			Free	Free	
Grade	0%			0%	0%	
Peak Hour Factor	0.92	0.92	0.92	0.92	0.92	0.92
Hourly flow rate (vph)	6	89	23	325	245	11
Pedestrians						
Lane Width (ft)						
Walking Speed (ft/s)						
Percent Blockage						
Right turn flare (veh)						
Median type				None	None	
Median storage veh)						
Upstream signal (ft)					1121	
pX, platoon unblocked						
vC, conflicting volume	621	250	256			
vC1, stage 1 conf vol						
vC2, stage 2 conf vol						
vCu, unblocked vol	621	250	256			
tC, single (s)	6.4	6.2	4.1			
tC, 2 stage (s)						
tF (s)	3.5	3.3	2.2			
p0 queue free %	99	89	98			
cM capacity (veh/h)	443	788	1309			

Direction, Lane #	EB 1	NB 1	SB 1
Volume Total	95	347	256
Volume Left	6	23	0
Volume Right	89	0	11
cSH	751	1309	1700
Volume to Capacity	0.13	0.02	0.15
Queue Length 95th (ft)	11	1	0
Control Delay (s)	10.5	0.7	0.0
Lane LOS	B	A	
Approach Delay (s)	10.5	0.7	0.0
Approach LOS	B		

Intersection Summary			
Average Delay	1.8		
Intersection Capacity Utilization	44.7%	ICU Level of Service	A
Analysis Period (min)	15		

Movement	WBL	WBR	NBT	NBR	SBL	SBT
Lane Configurations						
Volume (veh/h)	49	47	261	36	26	240
Sign Control	Stop		Free			Free
Grade	0%		0%			0%
Peak Hour Factor	0.94	0.94	0.94	0.94	0.94	0.94
Hourly flow rate (vph)	58	56	308	43	31	283
Pedestrians						
Lane Width (ft)						
Walking Speed (ft/s)						
Percent Blockage						
Right turn flare (veh)						
Median type			None			None
Median storage veh)						
Upstream signal (ft)						
pX, platoon unblocked						
vC, conflicting volume	674	329			351	
vC1, stage 1 conf vol						
vC2, stage 2 conf vol						
vCu, unblocked vol	674	329			351	
tC, single (s)	6.4	6.2			4.1	
tC, 2 stage (s)						
tF (s)	3.5	3.3			2.2	
p0 queue free %	86	92			97	
cM capacity (veh/h)	409	712			1208	

Direction, Lane #	WB 1	NB 1	SB 1
Volume Total	113	351	314
Volume Left	58	0	31
Volume Right	56	43	0
cSH	517	1700	1208
Volume to Capacity	0.22	0.21	0.03
Queue Length 95th (ft)	21	0	2
Control Delay (s)	13.9	0.0	1.0
Lane LOS	B		A
Approach Delay (s)	13.9	0.0	1.0
Approach LOS	B		

Intersection Summary			
Average Delay	2.4		
Intersection Capacity Utilization	49.5%	ICU Level of Service	A
Analysis Period (min)	15		

Movement	EBL	EBR	NBL	NBT	SBT	SBR
Lane Configurations						
Volume (veh/h)	5	46	14	312	295	4
Sign Control	Stop			Free	Free	
Grade	0%			0%	0%	
Peak Hour Factor	0.93	0.93	0.93	0.93	0.93	0.93
Hourly flow rate (vph)	6	55	17	372	352	5
Pedestrians						
Lane Width (ft)						
Walking Speed (ft/s)						
Percent Blockage						
Right turn flare (veh)						
Median type				None	None	
Median storage veh)						
Upstream signal (ft)				1230		
pX, platoon unblocked	0.87					
vC, conflicting volume	760	354	357			
vC1, stage 1 conf vol						
vC2, stage 2 conf vol						
vCu, unblocked vol	651	354	357			
tC, single (s)	6.4	6.2	4.1			
tC, 2 stage (s)						
tF (s)	3.5	3.3	2.2			
p0 queue free %	98	92	99			
cM capacity (veh/h)	372	689	1202			

Direction, Lane #	EB 1	NB 1	SB 1
Volume Total	61	389	357
Volume Left	6	17	0
Volume Right	55	0	5
cSH	636	1202	1700
Volume to Capacity	0.10	0.01	0.21
Queue Length 95th (ft)	8	1	0
Control Delay (s)	11.3	0.5	0.0
Lane LOS	B	A	
Approach Delay (s)	11.3	0.5	0.0
Approach LOS	B		

Intersection Summary			
Average Delay	1.1		
Intersection Capacity Utilization	41.0%	ICU Level of Service	A
Analysis Period (min)	15		

Movement	EBL	EBT	EBR	WBL	WBT	WBR	NBL	NBT	NBR	SBL	SBT	SBR
Lane Configurations												
Volume (veh/h)	5	4	26	7	1	12	4	329	2	4	355	7
Sign Control		Stop			Stop			Free			Free	
Grade		0%			0%			0%			0%	
Peak Hour Factor	0.87	0.87	0.87	0.87	0.87	0.87	0.87	0.87	0.87	0.87	0.87	0.87
Hourly flow rate (vph)	6	5	33	9	1	15	5	420	3	5	453	9
Pedestrians												
Lane Width (ft)												
Walking Speed (ft/s)												
Percent Blockage												
Right turn flare (veh)												
Median type								None			None	
Median storage veh)												
Upstream signal (ft)								904				
pX, platoon unblocked	0.85	0.85		0.85	0.85	0.85				0.85		
vC, conflicting volume	915	900	457	935	903	421	462			422		
vC1, stage 1 conf vol												
vC2, stage 2 conf vol												
vCu, unblocked vol	811	794	457	835	798	230	462			232		
tC, single (s)	7.1	6.5	6.2	7.1	6.5	6.2	4.1			4.1		
tC, 2 stage (s)												
tF (s)	3.5	4.0	3.3	3.5	4.0	3.3	2.2			2.2		
p0 queue free %	97	98	95	96	100	98	100			100		
cM capacity (veh/h)	245	270	603	226	269	687	1099			1135		

Direction, Lane #	EB 1	WB 1	NB 1	SB 1
Volume Total	45	26	427	467
Volume Left	6	9	5	5
Volume Right	33	15	3	9
cSH	447	383	1099	1135
Volume to Capacity	0.10	0.07	0.00	0.00
Queue Length 95th (ft)	8	5	0	0
Control Delay (s)	13.9	15.1	0.1	0.1
Lane LOS	B	C	A	A
Approach Delay (s)	13.9	15.1	0.1	0.1
Approach LOS	B	C		

Intersection Summary			
Average Delay	1.2		
Intersection Capacity Utilization	33.8%	ICU Level of Service	A
Analysis Period (min)	15		

Movement	EBL	EBT	EBR	WBL	WBT	WBR	NBL	NBT	NBR	SBL	SBT	SBR
Lane Configurations												
Volume (veh/h)	1	0	2	0	0	0	1	346	0	2	399	2
Sign Control		Stop			Stop			Free			Free	
Grade		0%			0%			0%			0%	
Peak Hour Factor	0.91	0.91	0.91	0.91	0.91	0.91	0.91	0.91	0.91	0.91	0.91	0.91
Hourly flow rate (vph)	1	0	2	0	0	0	1	422	0	2	487	2
Pedestrians												
Lane Width (ft)												
Walking Speed (ft/s)												
Percent Blockage												
Right turn flare (veh)												
Median type								None			None	
Median storage veh)												
Upstream signal (ft)								601				
pX, platoon unblocked	0.86	0.86		0.86	0.86	0.86				0.86		
vC, conflicting volume	917	917	488	920	918	422	489			422		
vC1, stage 1 conf vol												
vC2, stage 2 conf vol												
vCu, unblocked vol	819	819	488	822	820	240	489			240		
tC, single (s)	7.1	6.5	6.2	7.1	6.5	6.2	4.1			4.1		
tC, 2 stage (s)												
tF (s)	3.5	4.0	3.3	3.5	4.0	3.3	2.2			2.2		
p0 queue free %	100	100	100	100	100	100	100			100		
cM capacity (veh/h)	251	265	580	249	264	683	1074			1135		

Direction, Lane #	EB 1	WB 1	NB 1	SB 1
Volume Total	4	0	423	492
Volume Left	1	0	1	2
Volume Right	2	0	0	2
cSH	404	1700	1074	1135
Volume to Capacity	0.01	0.00	0.00	0.00
Queue Length 95th (ft)	1	0	0	0
Control Delay (s)	14.0	0.0	0.0	0.1
Lane LOS	B	A	A	A
Approach Delay (s)	14.0	0.0	0.0	0.1
Approach LOS	B	A		

Intersection Summary			
Average Delay	0.1		
Intersection Capacity Utilization	35.1%	ICU Level of Service	A
Analysis Period (min)	15		

Movement	EBL	EBT	EBR	WBL	WBT	WBR	NBL	NBT	NBR	SBL	SBT	SBR
Lane Configurations												
Volume (veh/h)	7	1	61	2	2	2	9	337	1	3	393	1
Sign Control		Stop			Stop			Free			Free	
Grade		0%			0%			0%			0%	
Peak Hour Factor	0.93	0.93	0.93	0.93	0.93	0.93	0.93	0.93	0.93	0.93	0.93	0.93
Hourly flow rate (vph)	8	1	73	2	2	2	11	402	1	4	469	1
Pedestrians												
Lane Width (ft)												
Walking Speed (ft/s)												
Percent Blockage												
Right turn flare (veh)												
Median type								None			None	
Median storage veh)												
Upstream signal (ft)								300				
pX, platoon unblocked	0.86	0.86		0.86	0.86	0.86				0.86		
vC, conflicting volume	905	902	470	975	902	403	470			403		
vC1, stage 1 conf vol												
vC2, stage 2 conf vol												
vCu, unblocked vol	811	808	470	892	808	230	470			231		
tC, single (s)	7.1	6.5	6.2	7.1	6.5	6.2	4.1			4.1		
tC, 2 stage (s)												
tF (s)	3.5	4.0	3.3	3.5	4.0	3.3	2.2			2.2		
p0 queue free %	97	100	88	99	99	100	99			100		
cM capacity (veh/h)	252	269	594	197	269	699	1091			1155		

Direction, Lane #	EB 1	WB 1	NB 1	SB 1
Volume Total	82	7	414	474
Volume Left	8	2	11	4
Volume Right	73	2	1	1
cSH	514	293	1091	1155
Volume to Capacity	0.16	0.02	0.01	0.00
Queue Length 95th (ft)	14	2	1	0
Control Delay (s)	13.3	17.6	0.3	0.1
Lane LOS	B	C	A	A
Approach Delay (s)	13.3	17.6	0.3	0.1
Approach LOS	B	C		

Intersection Summary			
Average Delay	1.4		
Intersection Capacity Utilization	38.0%	ICU Level of Service	A
Analysis Period (min)	15		

Lane Group	EBL	EBT	EBR	WBL	WBT	NBL	NBT	SBL	SBT
Lane Group Flow (vph)	42	526	193	221	627	163	450	39	544
v/c Ratio	0.08	0.80	0.34	0.54	0.46	0.46	0.57	0.10	0.69
Control Delay	16.3	51.9	17.1	22.2	35.7	36.2	51.8	31.6	57.8
Queue Delay	0.0	0.0	0.0	0.0	0.0	0.0	0.0	0.0	0.0
Total Delay	16.3	51.9	17.1	22.2	35.7	36.2	51.8	31.6	57.8
Queue Length 50th (ft)	18	400	50	106	242	102	178	23	248
Queue Length 95th (ft)	40	595	126	168	335	190	282	57	376
Internal Link Dist (ft)		1915			422		229		156
Turn Bay Length (ft)	130			95		155		130	
Base Capacity (vph)	528	897	762	478	1803	354	908	455	915
Starvation Cap Reductn	0	0	0	0	0	0	0	0	0
Spillback Cap Reductn	0	0	0	0	0	0	0	0	0
Storage Cap Reductn	0	0	0	0	0	0	0	0	0
Reduced v/c Ratio	0.08	0.59	0.25	0.46	0.35	0.46	0.50	0.09	0.59

Intersection Summary

Movement	EBL	EBT	EBR	WBL	WBT	WBR	NBL	NBT	NBR	SBL	SBT	SBR
Lane Configurations												
Volume (vph)	35	436	160	183	510	10	135	283	90	32	409	42
Ideal Flow (vphpl)	1900	1900	1900	1900	1900	1900	1900	1900	1900	1900	1900	1900
Total Lost time (s)	3.0	3.0	5.0	3.0	3.0		3.0	3.0		3.0	3.0	
Lane Util. Factor	1.00	1.00	1.00	1.00	0.95		1.00	0.95		1.00	0.95	
Frt	1.00	1.00	0.85	1.00	1.00		1.00	0.96		1.00	0.99	
Flt Protected	0.95	1.00	1.00	0.95	1.00		0.95	1.00		0.95	1.00	
Satd. Flow (prot)	1770	1863	1583	1770	3529		1770	3411		1770	3489	
Flt Permitted	0.33	1.00	1.00	0.25	1.00		0.23	1.00		0.49	1.00	
Satd. Flow (perm)	610	1863	1583	459	3529		434	3411		916	3489	
Peak-hour factor, PHF	0.92	0.92	0.92	0.92	0.92	0.92	0.92	0.92	0.92	0.92	0.92	0.92
Growth Factor (vph)	111%	111%	111%	111%	111%	111%	111%	111%	111%	111%	111%	111%
Adj. Flow (vph)	42	526	193	221	615	12	163	341	109	39	493	51
RTOR Reduction (vph)	0	0	84	0	1	0	0	17	0	0	5	0
Lane Group Flow (vph)	42	526	109	221	626	0	163	433	0	39	539	0
Turn Type	pm+pt	NA	custom	pm+pt	NA		custom	NA		custom	NA	
Protected Phases	1 2	2 4		1 3	3 4		5 6	6 8		5 7	7 8	
Permitted Phases	2 4		4	3 4			8			8		
Actuated Green, G (s)	66.6	48.4	44.3	64.7	52.5		46.0	29.2		41.6	30.8	
Effective Green, g (s)	66.6	48.4	44.3	64.7	52.5		46.0	29.2		41.6	30.8	
Actuated g/C Ratio	0.46	0.34	0.31	0.45	0.37		0.32	0.20		0.29	0.21	
Clearance Time (s)			5.0									
Vehicle Extension (s)			3.0									
Lane Grp Cap (vph)	463	628	488	393	1290		344	694		370	748	
v/s Ratio Prot	0.01	c0.28		c0.08	0.18		c0.07	0.13		0.01	c0.15	
v/s Ratio Perm	0.03		0.07	0.17			0.08			0.02		
v/c Ratio	0.09	0.84	0.22	0.56	0.49		0.47	0.62		0.11	0.72	
Uniform Delay, d1	21.5	44.0	36.9	26.8	35.1		37.1	52.2		37.0	52.4	
Progression Factor	1.00	1.00	1.00	1.00	1.00		1.00	1.00		1.00	1.00	
Incremental Delay, d2	0.1	9.5	0.2	1.8	0.3		1.0	1.8		0.1	3.4	
Delay (s)	21.5	53.5	37.1	28.7	35.4		38.1	54.0		37.2	55.8	
Level of Service	C	D	D	C	D		D	D		D	E	
Approach Delay (s)		47.6			33.7			49.7			54.6	
Approach LOS		D			C			D			D	

Intersection Summary			
HCM Average Control Delay	45.3	HCM Level of Service	D
HCM Volume to Capacity ratio	0.67		
Actuated Cycle Length (s)	143.6	Sum of lost time (s)	18.0
Intersection Capacity Utilization	72.4%	ICU Level of Service	C
Analysis Period (min)	15		

c Critical Lane Group

Movement	EBL	EBT	WBT	WBR	SBL	SBR
Lane Configurations						
Volume (veh/h)	4	582	718	9	5	1
Sign Control		Free	Free		Stop	
Grade		0%	0%		0%	
Peak Hour Factor	0.96	0.96	0.96	0.96	0.96	0.96
Hourly flow rate (vph)	5	673	830	10	6	1
Pedestrians						
Lane Width (ft)						
Walking Speed (ft/s)						
Percent Blockage						
Right turn flare (veh)						
Median type		None	None			
Median storage veh)						
Upstream signal (ft)		502				
pX, platoon unblocked					0.73	
vC, conflicting volume	841				1518	835
vC1, stage 1 conf vol						
vC2, stage 2 conf vol						
vCu, unblocked vol	841				1524	835
tC, single (s)	4.1				6.4	6.2
tC, 2 stage (s)						
tF (s)	2.2				3.5	3.3
p0 queue free %	99				94	100
cM capacity (veh/h)	795				94	367

Direction, Lane #	EB 1	EB 2	WB 1	SB 1
Volume Total	5	673	841	7
Volume Left	5	0	0	6
Volume Right	0	0	10	1
cSH	795	1700	1700	108
Volume to Capacity	0.01	0.40	0.49	0.06
Queue Length 95th (ft)	0	0	0	5
Control Delay (s)	9.6	0.0	0.0	40.7
Lane LOS	A			E
Approach Delay (s)	0.1		0.0	40.7
Approach LOS				E

Intersection Summary			
Average Delay	0.2		
Intersection Capacity Utilization	52.6%	ICU Level of Service	A
Analysis Period (min)	15		

Lane Group	EBL	EBT	WBL	WBT	NBL	NBT	SBL	SBT
Lane Group Flow (vph)	224	549	244	501	88	1820	232	2452
v/c Ratio	0.74	0.92	0.90	0.90	0.75	0.83	0.90	0.94
Control Delay	89.2	95.1	110.1	94.8	73.7	49.3	91.0	49.7
Queue Delay	0.0	0.0	0.0	0.0	0.0	0.0	0.0	0.0
Total Delay	89.2	95.1	110.1	94.8	73.7	49.3	91.0	49.7
Queue Length 50th (ft)	269	355	331	339	57	737	234	1045
Queue Length 95th (ft)	376	#459	#512	#432	#162	800	#389	1109
Internal Link Dist (ft)		364		1915		469		768
Turn Bay Length (ft)			286		160		130	
Base Capacity (vph)	316	628	288	597	118	2200	280	2664
Starvation Cap Reductn	0	0	0	0	0	0	0	0
Spillback Cap Reductn	0	0	0	0	0	0	0	0
Storage Cap Reductn	0	0	0	0	0	0	0	0
Reduced v/c Ratio	0.71	0.87	0.85	0.84	0.75	0.83	0.83	0.92

Intersection Summary

95th percentile volume exceeds capacity, queue may be longer.
Queue shown is maximum after two cycles.

Movement	EBL	EBT	EBR	WBL	WBT	WBR	NBL	NBT	NBR	SBL	SBT	SBR
Lane Configurations												
Volume (vph)	186	405	50	306	301	11	73	1202	307	192	1801	231
Ideal Flow (vphpl)	1900	1900	1900	1900	1900	1900	1900	1900	1900	1900	1900	1900
Total Lost time (s)	5.0	5.0		5.0	5.0		3.0	5.0		3.0	5.0	
Lane Util. Factor	1.00	0.95		0.91	0.91		1.00	0.91		1.00	0.91	
Frt	1.00	0.98		1.00	1.00		1.00	0.97		1.00	0.98	
Flt Protected	0.95	1.00		0.95	0.99		0.95	1.00		0.95	1.00	
Satd. Flow (prot)	1770	3481		1610	3335		1770	4930		1770	4998	
Flt Permitted	0.95	1.00		0.95	0.99		0.05	1.00		0.05	1.00	
Satd. Flow (perm)	1770	3481		1610	3335		91	4930		88	4998	
Peak-hour factor, PHF	0.92	0.92	0.92	0.92	0.92	0.92	0.92	0.92	0.92	0.92	0.92	0.92
Growth Factor (vph)	111%	111%	111%	111%	111%	111%	111%	111%	111%	111%	111%	111%
Adj. Flow (vph)	224	489	60	369	363	13	88	1450	370	232	2173	279
RTOR Reduction (vph)	0	5	0	0	1	0	0	23	0	0	9	0
Lane Group Flow (vph)	224	544	0	244	500	0	88	1797	0	232	2443	0
Turn Type	Split	NA		Split	NA		pm+pt	NA		pm+pt	NA	
Protected Phases	4	4		8	8		5	2		1	6	
Permitted Phases							2			6		
Actuated Green, G (s)	31.6	31.6		31.0	31.0		89.7	81.7		107.4	96.4	
Effective Green, g (s)	31.6	31.6		31.0	31.0		89.7	81.7		107.4	96.4	
Actuated g/C Ratio	0.17	0.17		0.17	0.17		0.48	0.44		0.58	0.52	
Clearance Time (s)	5.0	5.0		5.0	5.0		3.0	5.0		3.0	5.0	
Vehicle Extension (s)	3.0	3.0		3.0	3.0		3.0	3.0		3.0	3.0	
Lane Grp Cap (vph)	302	595		270	559		117	2177		257	2604	
v/s Ratio Prot	0.13	c0.16		c0.15	0.15		0.03	0.36		c0.11	c0.49	
v/s Ratio Perm							0.33			0.41		
v/c Ratio	0.74	0.91		0.90	0.89		0.75	0.83		0.90	0.94	
Uniform Delay, d1	72.8	75.4		75.5	75.4		40.9	45.4		62.4	41.5	
Progression Factor	1.00	1.00		1.00	1.00		1.00	1.00		1.00	1.00	
Incremental Delay, d2	9.4	18.6		30.7	16.7		23.5	3.7		31.7	7.4	
Delay (s)	82.3	94.0		106.3	92.1		64.4	49.1		94.1	48.9	
Level of Service	F	F		F	F		E	D		F	D	
Approach Delay (s)		90.6			96.7			49.8			52.8	
Approach LOS		F			F			D			D	

Intersection Summary			
HCM Average Control Delay	62.0	HCM Level of Service	E
HCM Volume to Capacity ratio	0.91		
Actuated Cycle Length (s)	185.0	Sum of lost time (s)	13.0
Intersection Capacity Utilization	91.9%	ICU Level of Service	F
Analysis Period (min)	15		

c Critical Lane Group

Movement	EBL	EBT	EBR	WBL	WBT	WBR	NBL	NBT	NBR	SBL	SBT	SBR
Lane Configurations												
Volume (vph)	186	405	50	306	301	11	73	1202	307	192	1801	231
Movement Number	7	4	14	3	8	18	5	2	12	1	6	16
Initial Queue, veh	0	0	0	0	0	0	0	0	0	0	0	0
Ped-Bike Adj. Factor (A_pbT)	1.00		1.00	1.00		1.00	1.00		1.00	1.00		1.00
Parking, Bus Adj. Factors	1.00	1.00	1.00	1.00	1.00	1.00	1.00	1.00	1.00	1.00	1.00	1.00
Adj. Sat. Flow Rate, veh/h/ln	1863	1863	1863	1863	1863	1863	1863	1863	1863	1863	1863	1863
Lanes	1	2	0	1	2	0	1	3	0	1	3	0
Lane Assignment												
Capacity, veh/h	273	502	62	339	683	25	127	1948	497	234	2362	300
Proportion Arriving On Green	0.15	0.15	0.15	0.19	0.19	0.19	0.03	0.48	0.48	0.07	0.52	0.52
Movement Delay, s/veh	76.2	89.2	91.0	113.0	63.1	63.2	43.0	36.4	38.6	48.3	38.0	41.5
Movement LOS	E	F	F	F	E	E	D	D	D	D	D	D
Approach Volume, veh/h		697			672			1720			2417	
Approach Delay, s/veh		86.1			87.8			37.4			40.0	
Approach LOS		F			F			D			D	

Timer:	1	2	3	4	5	6	7	8
Assigned Phase	1	2	8	4	5	6		
Case No	1.1	4.0	10.0	10.0	1.1	4.0		
Phase Duration (G+Y+Rc), s	14.81	88.21	38.00	31.60	8.81	94.20		
Change Period (Y+Rc), s	3.00	5.00	5.00	5.00	3.00	5.00		
Max. Allowable Headway (MAH), s	4.00	3.96	3.96	3.96	4.00	3.96		
Maximum Green Setting (Gmax), s	25.00	81.00	33.00	33.00	8.00	98.00		
Max. Queue Clearance Time (g_c+I1), s	11.28	44.80	34.21	24.97	5.91	65.68		
Green Extension Time (g_e), s	0.53	27.36	0.00	1.62	0.03	23.52		
Probability of Phase Call (p_c)	1.000	1.000	1.000	1.000	0.978	1.000		
Probability of Max Out (p_x)	0.001	0.707	1.000	0.276	1.000	0.737		

Left-Turn Movement Data					
Assigned Movement	1		3	7	5
Mvmt. Sat Flow, veh/h	1774.04		1774.04	1774.04	1774.04

Through Movement Data					
Assigned Movement		2	8	4	6
Mvmt. Sat Flow, veh/h		4040.41	3572.32	3255.17	4570.65

Right-Turn Movement Data					
Assigned Movement		12	18	14	16
Mvmt. Sat Flow, veh/h		1030.65	130.19	399.77	579.95

Left Lane Group Data								
Assigned Movement	1	0	3	7	5	0	0	0
Lane Assignment	L (Pr/Pm)		L	LL (Pr/Pm)				
Lanes in Group	1	0	1	1	1	0	0	0
Group Volume (v), veh/h	208.7	0.0	332.6	202.2	79.3	0.0	0.0	0.0
Group Sat. Flow (s), veh/h/ln	1774.0	0.0	1774.0	1774.0	1774.0	0.0	0.0	0.0
Queue Serve Time (g_s), s	9.3	0.0	32.2	18.8	3.9	0.0	0.0	0.0
Cycle Queue Clear Time (g_c), s	9.3	0.0	32.2	18.8	3.9	0.0	0.0	0.0

Perm LT Sat Flow Rate (s_l), veh/h/ln	304.4	0.0	1774.0	1774.0	174.6	0.0	0.0	0.0
Shared LT Sat Flow (s_sh), veh/h/ln	0.0	0.0	0.0	0.0	0.0	0.0	0.0	0.0
Perm LT Eff. Green (g_p), s	91.2	0.0	0.0	0.0	83.2	0.0	0.0	0.0
Perm LT Serve Time (g_u), s	40.4	0.0	0.0	0.0	25.5	0.0	0.0	0.0
Perm LT Que Serve Time (g_ps), s	40.4	0.0	0.0	0.0	25.5	0.0	0.0	0.0
Time to First Blk (g_f), s	0.0	0.0	0.0	0.0	0.0	0.0	0.0	0.0
Serve Time pre Blk (g_fs), s	0.0	0.0	0.0	0.0	0.0	0.0	0.0	0.0
Proportion LT Inside Lane (P_L)	1.000	0.000	1.000	1.000	1.000	0.000	0.000	0.000
Lane Group Capacity (c), veh/h	234.3	0.0	339.2	273.3	127.3	0.0	0.0	0.0
Volume-to-Capacity Ratio (X)	0.891	0.000	0.981	0.740	0.624	0.000	0.000	0.000
Available Capacity (c_a), veh/h	369.9	0.0	339.2	339.2	149.7	0.0	0.0	0.0
Upstream Filter Factor (I)	1.000	0.000	1.000	1.000	1.000	0.000	0.000	0.000
Uniform Delay (d1), s/veh	33.1	0.0	69.5	69.7	37.1	0.0	0.0	0.0
Incremental Delay (d2), s/veh	15.2	0.0	43.5	6.5	6.0	0.0	0.0	0.0
Initial Queue Delay (d3), s/veh	0.0	0.0	0.0	0.0	0.0	0.0	0.0	0.0
Control Delay (d), s/veh	48.3	0.0	113.0	76.2	43.0	0.0	0.0	0.0
First-Term Queue (Q1), veh/ln	5.3	0.0	14.7	8.6	1.8	0.0	0.0	0.0
Second-Term Queue (Q2), veh/ln	1.0	0.0	4.1	0.5	0.2	0.0	0.0	0.0
Third-Term Queue (Q3), veh/ln	0.0	0.0	0.0	0.0	0.0	0.0	0.0	0.0
Percentile bk-of-que factor (f_B%)	1.000	0.000	1.000	1.000	1.000	0.000	0.000	0.000
Percentile Back of Queue (Q%), veh/ln	6.3	0.0	18.8	9.1	2.0	0.0	0.0	0.0
Percentile Storage Ratio (RQ%)	1.23	0.00	1.67	0.67	0.32	0.00	0.00	0.00
Initial Queue (Qb), veh	0.0	0.0	0.0	0.0	0.0	0.0	0.0	0.0
Final (Residual) Queue (Qe), veh	0.0	0.0	0.0	0.0	0.0	0.0	0.0	0.0
Saturated Delay (ds), s/veh	0.0	0.0	0.0	0.0	0.0	0.0	0.0	0.0
Saturated Queue (Qs), veh	0.0	0.0	0.0	0.0	0.0	0.0	0.0	0.0
Saturated Capacity (cs), veh/h	0.0	0.0	0.0	0.0	0.0	0.0	0.0	0.0
Initial Queue Clear Time (tc), h	0.0	0.0	0.0	0.0	0.0	0.0	0.0	0.0
Middle Lane Group Data								
Assigned Movement	0	2	8	4	0	6	0	0
Lane Assignment		T	T	T		T		
Lanes in Group	0	2	1	1	0	2	0	0
Group Volume (v), veh/h	0.0	1096.0	170.2	250.9	0.0	1446.5	0.0	0.0
Group Sat. Flow (s), veh/h/ln	0.0	1695.1	1862.7	1862.7	0.0	1695.1	0.0	0.0
Queue Serve Time (g_s), s	0.0	42.7	14.0	22.7	0.0	62.1	0.0	0.0
Cycle Queue Clear Time (g_c), s	0.0	42.7	14.0	22.7	0.0	62.1	0.0	0.0
Lane Group Capacity (c), veh/h	0.0	1634.3	356.1	287.0	0.0	1752.0	0.0	0.0
Volume-to-Capacity Ratio (X)	0.000	0.671	0.478	0.874	0.000	0.826	0.000	0.000
Available Capacity (c_a), veh/h	0.0	1634.3	356.1	356.1	0.0	1924.8	0.0	0.0
Upstream Filter Factor (I)	0.000	1.000	1.000	1.000	0.000	1.000	0.000	0.000
Uniform Delay (d1), s/veh	0.0	34.2	62.1	71.4	0.0	35.1	0.0	0.0
Incremental Delay (d2), s/veh	0.0	2.2	1.0	17.8	0.0	2.9	0.0	0.0
Initial Queue Delay (d3), s/veh	0.0	0.0	0.0	0.0	0.0	0.0	0.0	0.0
Control Delay (d), s/veh	0.0	36.4	63.1	89.2	0.0	38.0	0.0	0.0
First-Term Queue (Q1), veh/ln	0.0	17.8	6.7	10.9	0.0	25.6	0.0	0.0
Second-Term Queue (Q2), veh/ln	0.0	0.5	0.1	1.4	0.0	0.7	0.0	0.0
Third-Term Queue (Q3), veh/ln	0.0	0.0	0.0	0.0	0.0	0.0	0.0	0.0
Percentile bk-of-que factor (f_B%)	0.000	1.000	1.000	1.000	0.000	1.000	0.000	0.000
Percentile Back of Queue (Q%), veh/ln	0.0	18.3	6.8	12.3	0.0	26.3	0.0	0.0
Percentile Storage Ratio (RQ%)	0.00	1.02	0.09	0.91	0.00	0.91	0.00	0.00

Initial Queue (Qb), veh	0.0	0.0	0.0	0.0	0.0	0.0	0.0	0.0
Final (Residual) Queue (Qe), veh	0.0	0.0	0.0	0.0	0.0	0.0	0.0	0.0
Saturated Delay (ds), s/veh	0.0	0.0	0.0	0.0	0.0	0.0	0.0	0.0
Saturated Queue (Qs), veh	0.0	0.0	0.0	0.0	0.0	0.0	0.0	0.0
Saturated Capacity (cs), veh/h	0.0	0.0	0.0	0.0	0.0	0.0	0.0	0.0
Initial Queue Clear Time (tc), h	0.0	0.0	0.0	0.0	0.0	0.0	0.0	0.0
Right Lane Group Data								
Assigned Movement	0	12	18	14	0	16	0	0
Lane Assignment		T+R	T+R	T+R		T+R		
Lanes in Group	0	1	1	1	0	1	0	0
Group Volume (v), veh/h	0.0	544.2	169.0	243.6	0.0	762.2	0.0	0.0
Group Sat. Flow (s), veh/h/ln	0.0	1680.9	1839.8	1792.2	0.0	1760.4	0.0	0.0
Queue Serve Time (g_s), s	0.0	42.8	14.1	23.0	0.0	63.7	0.0	0.0
Cycle Queue Clear Time (g_c), s	0.0	42.8	14.1	23.0	0.0	63.7	0.0	0.0
Prot RT Sat Flow Rate (s_R), veh/h/ln	0.0	0.0	0.0	0.0	0.0	0.0	0.0	0.0
Prot RT Eff. Green (g_R), s	0.0	0.0	0.0	0.0	0.0	0.0	0.0	0.0
Proportion RT Outside Lane (P_R)	0.000	0.613	0.071	0.223	0.000	0.329	0.000	0.000
Lane Group Capacity (c), veh/h	0.0	810.3	351.7	276.1	0.0	909.8	0.0	0.0
Volume-to-Capacity Ratio (X)	0.000	0.672	0.480	0.882	0.000	0.838	0.000	0.000
Available Capacity (c_a), veh/h	0.0	810.3	351.7	342.6	0.0	999.5	0.0	0.0
Upstream Filter Factor (I)	0.000	1.000	1.000	1.000	0.000	1.000	0.000	0.000
Uniform Delay (d1), s/veh	0.0	34.2	62.2	71.5	0.0	35.5	0.0	0.0
Incremental Delay (d2), s/veh	0.0	4.4	1.0	19.5	0.0	5.9	0.0	0.0
Initial Queue Delay (d3), s/veh	0.0	0.0	0.0	0.0	0.0	0.0	0.0	0.0
Control Delay (d), s/veh	0.0	38.6	63.2	91.0	0.0	41.5	0.0	0.0
First-Term Queue (Q1), veh/ln	0.0	17.7	6.7	10.6	0.0	27.3	0.0	0.0
Second-Term Queue (Q2), veh/ln	0.0	1.0	0.1	1.5	0.0	1.5	0.0	0.0
Third-Term Queue (Q3), veh/ln	0.0	0.0	0.0	0.0	0.0	0.0	0.0	0.0
Percentile bk-of-que factor (f_B%)	0.000	1.000	1.000	1.000	0.000	1.000	0.000	0.000
Percentile Back of Queue (Q%), veh/ln	0.0	18.7	6.8	12.1	0.0	28.8	0.0	0.0
Percentile Storage Ratio (RQ%)	0.00	1.04	0.09	0.89	0.00	1.00	0.00	0.00
Initial Queue (Qb), veh	0.0	0.0	0.0	0.0	0.0	0.0	0.0	0.0
Final (Residual) Queue (Qe), veh	0.0	0.0	0.0	0.0	0.0	0.0	0.0	0.0
Saturated Delay (ds), s/veh	0.0	0.0	0.0	0.0	0.0	0.0	0.0	0.0
Saturated Queue (Qs), veh	0.0	0.0	0.0	0.0	0.0	0.0	0.0	0.0
Saturated Capacity (cs), veh/h	0.0	0.0	0.0	0.0	0.0	0.0	0.0	0.0
Initial Queue Clear Time (tc), h	0.0	0.0	0.0	0.0	0.0	0.0	0.0	0.0
Intersection Summary								
HCM Average Control Delay		50.9						
HCM Level of Service		D						

Movement	EBL	EBT	EBR	WBL	WBT	WBR	NEL	NET	NER	SWL	SWT	SWR
Lane Configurations												
Volume (veh/h)	27	21	0	0	8	14	36	1689	18	0	0	0
Sign Control		Stop			Stop			Free			Free	
Grade		0%			0%			0%			0%	
Peak Hour Factor	0.93	0.93	0.93	0.93	0.93	0.93	0.93	0.93	0.93	0.93	0.93	0.93
Hourly flow rate (vph)	32	25	0	0	10	17	43	2016	21	0	0	0
Pedestrians												
Lane Width (ft)												
Walking Speed (ft/s)												
Percent Blockage												
Right turn flare (veh)												
Median type								None			None	
Median storage veh)												
Upstream signal (ft)												
pX, platoon unblocked												
vC, conflicting volume	779	2123	0	2125	2113	683	0			2037		
vC1, stage 1 conf vol												
vC2, stage 2 conf vol												
vCu, unblocked vol	779	2123	0	2125	2113	683	0			2037		
tC, single (s)	7.5	6.5	6.9	7.5	6.5	6.9	4.1			4.1		
tC, 2 stage (s)												
tF (s)	3.5	4.0	3.3	3.5	4.0	3.3	2.2			2.2		
p0 queue free %	86	48	100	100	80	96	97			100		
cM capacity (veh/h)	228	48	1084	16	49	392	1622			274		

Direction, Lane #	EB 1	WB 1	NE 1	NE 2	NE 3
Volume Total	57	26	547	1008	525
Volume Left	32	0	43	0	0
Volume Right	0	17	0	0	21
cSH	87	110	1622	1700	1700
Volume to Capacity	0.66	0.24	0.03	0.59	0.31
Queue Length 95th (ft)	79	22	2	0	0
Control Delay (s)	105.3	47.5	0.8	0.0	0.0
Lane LOS	F	E	A		
Approach Delay (s)	105.3	47.5	0.2		
Approach LOS	F	E			

Intersection Summary			
Average Delay	3.6		
Intersection Capacity Utilization	53.7%	ICU Level of Service	A
Analysis Period (min)	15		

Movement	EBL	EBT	EBR	WBL	WBT	WBR	NEL	NET	NER	SWL	SWT	SWR
Lane Configurations												
Volume (veh/h)	0	24	0	0	3	0	1	1803	7	0	0	0
Sign Control		Stop			Stop			Free			Free	
Grade		0%			0%			0%			0%	
Peak Hour Factor	0.91	0.91	0.91	0.91	0.91	0.91	0.91	0.91	0.91	0.91	0.91	0.91
Hourly flow rate (vph)	0	29	0	0	4	0	1	2199	9	0	0	0
Pedestrians												
Lane Width (ft)												
Walking Speed (ft/s)												
Percent Blockage												
Right turn flare (veh)												
Median type								None			None	
Median storage veh)												
Upstream signal (ft)												
pX, platoon unblocked												
vC, conflicting volume	737	2210	0	2221	2206	737	0			2208		
vC1, stage 1 conf vol												
vC2, stage 2 conf vol												
vCu, unblocked vol	737	2210	0	2221	2206	737	0			2208		
tC, single (s)	7.5	6.5	6.9	7.5	6.5	6.9	4.1			4.1		
tC, 2 stage (s)												
tF (s)	3.5	4.0	3.3	3.5	4.0	3.3	2.2			2.2		
p0 queue free %	100	33	100	100	92	100	100			100		
cM capacity (veh/h)	287	44	1084	11	44	361	1622			234		

Direction, Lane #	EB 1	WB 1	NE 1	NE 2	NE 3
Volume Total	29	4	551	1100	558
Volume Left	0	0	1	0	0
Volume Right	0	0	0	0	9
cSH	44	44	1622	1700	1700
Volume to Capacity	0.67	0.08	0.00	0.65	0.33
Queue Length 95th (ft)	64	7	0	0	0
Control Delay (s)	188.6	94.6	0.0	0.0	0.0
Lane LOS	F	F	A		
Approach Delay (s)	188.6	94.6	0.0		
Approach LOS	F	F			

Intersection Summary			
Average Delay	2.6		
Intersection Capacity Utilization	48.9%	ICU Level of Service	A
Analysis Period (min)	15		

HCM Unsignalized Intersection Capacity Analysis
1: SW 97th Ave. & SW 174th St.

2/11/2015

Movement	EBL	EBT	EBR	WBL	WBT	WBR	NBL	NBT	NBR	SBL	SBT	SBR
Lane Configurations												
Sign Control		Stop			Stop			Stop			Stop	
Volume (vph)	7	122	48	50	89	1	38	13	21	2	1	2
Peak Hour Factor	0.84	0.84	0.84	0.84	0.84	0.84	0.84	0.84	0.84	0.84	0.84	0.84
Hourly flow rate (vph)	10	170	67	70	124	1	53	18	29	3	1	3

Direction, Lane #	EB 1	WB 1	NB 1	SB 1
Volume Total (vph)	247	195	100	7
Volume Left (vph)	10	70	53	3
Volume Right (vph)	67	1	29	3
Hadj (s)	-0.12	0.10	-0.04	-0.13
Departure Headway (s)	4.3	4.5	4.9	4.9
Degree Utilization, x	0.29	0.25	0.14	0.01
Capacity (veh/h)	816	760	679	651
Control Delay (s)	9.0	9.0	8.6	8.0
Approach Delay (s)	9.0	9.0	8.6	8.0
Approach LOS	A	A	A	A

Intersection Summary			
Delay	8.9		
HCM Level of Service	A		
Intersection Capacity Utilization	37.1%	ICU Level of Service	A
Analysis Period (min)	15		

Lane Group	EBL	NBT	SBT	NET
Lane Group Flow (vph)	94	590	18	4322
v/c Ratio	1.24	1.38	0.05	1.34
Control Delay	240.4	223.7	51.9	182.9
Queue Delay	0.0	0.0	0.0	0.0
Total Delay	240.4	223.7	51.9	182.9
Queue Length 50th (ft)	~129	~804	16	~2286
Queue Length 95th (ft)	#235	#944	38	#2056
Internal Link Dist (ft)	257	1041	665	1300
Turn Bay Length (ft)				
Base Capacity (vph)	76	429	330	3230
Starvation Cap Reductn	0	0	0	0
Spillback Cap Reductn	0	0	0	0
Storage Cap Reductn	0	0	0	0
Reduced v/c Ratio	1.24	1.38	0.05	1.34

Intersection Summary

~ Volume exceeds capacity, queue is theoretically infinite.
Queue shown is maximum after two cycles.

95th percentile volume exceeds capacity, queue may be longer.
Queue shown is maximum after two cycles.

Movement	EBL	EBR	NBL	NBT	NBR	SBL	SBT	NEL2	NEL	NET	NER
Lane Configurations											
Volume (vph)	1	67	3	21	400	3	10	1	2	3094	6
Ideal Flow (vphpl)	1900	1900	1900	1900	1900	1900	1900	1900	1900	1900	1900
Total Lost time (s)	5.0			5.0			5.0			5.0	
Lane Util. Factor	1.00			1.00			1.00			0.91	
Frt	0.87			0.87			1.00			1.00	
Flt Protected	1.00			1.00			0.99			1.00	
Satd. Flow (prot)	1613			1625			1842			5084	
Flt Permitted	1.00			1.00			0.77			1.00	
Satd. Flow (perm)	1613			1624			1438			5084	
Peak-hour factor, PHF	0.84	0.84	0.84	0.84	0.84	0.84	0.84	0.84	0.84	0.84	0.84
Growth Factor (vph)	117%	117%	117%	117%	117%	117%	117%	117%	117%	117%	117%
Adj. Flow (vph)	1	93	4	29	557	4	14	1	3	4310	8
RTOR Reduction (vph)	0	0	0	56	0	0	0	0	0	0	0
Lane Group Flow (vph)	94	0	0	534	0	0	18	0	0	4322	0
Turn Type	NA		Perm	NA		Perm	NA	Perm	Perm	NA	
Protected Phases	3			4			8			6	
Permitted Phases			4			8		6	6		
Actuated Green, G (s)	8.0			39.0			39.0			108.0	
Effective Green, g (s)	8.0			39.0			39.0			108.0	
Actuated g/C Ratio	0.05			0.23			0.23			0.64	
Clearance Time (s)	5.0			5.0			5.0			5.0	
Vehicle Extension (s)	3.0			3.0			3.0			3.0	
Lane Grp Cap (vph)	76			373			330			3230	
v/s Ratio Prot	c0.06										
v/s Ratio Perm				c0.33			0.01			0.85	
v/c Ratio	1.24			1.43			0.05			1.34	
Uniform Delay, d1	81.0			65.5			51.1			31.0	
Progression Factor	1.00			1.00			1.00			1.00	
Incremental Delay, d2	179.9			208.8			0.3			154.3	
Delay (s)	260.9			274.3			51.4			185.3	
Level of Service	F			F			D			F	
Approach Delay (s)	260.9			274.3			51.4			185.3	
Approach LOS	F			F			D			F	

Intersection Summary			
HCM Average Control Delay	196.7	HCM Level of Service	F
HCM Volume to Capacity ratio	1.36		
Actuated Cycle Length (s)	170.0	Sum of lost time (s)	15.0
Intersection Capacity Utilization	119.1%	ICU Level of Service	H
Analysis Period (min)	15		

c Critical Lane Group

Movement	EBL	EBR	NBL	NBT	SBT	SBR
Lane Configurations						
Volume (veh/h)	8	30	32	447	78	0
Sign Control	Stop			Free	Free	
Grade	0%			0%	0%	
Peak Hour Factor	0.90	0.90	0.90	0.90	0.90	0.90
Hourly flow rate (vph)	10	39	42	581	101	0
Pedestrians						
Lane Width (ft)						
Walking Speed (ft/s)						
Percent Blockage						
Right turn flare (veh)						
Median type				None	None	
Median storage veh)						
Upstream signal (ft)					1121	
pX, platoon unblocked						
vC, conflicting volume	766	101	101			
vC1, stage 1 conf vol						
vC2, stage 2 conf vol						
vCu, unblocked vol	766	101	101			
tC, single (s)	6.4	6.2	4.1			
tC, 2 stage (s)						
tF (s)	3.5	3.3	2.2			
p0 queue free %	97	96	97			
cM capacity (veh/h)	361	954	1491			

Direction, Lane #	EB 1	NB 1	SB 1
Volume Total	49	623	101
Volume Left	10	42	0
Volume Right	39	0	0
cSH	709	1491	1700
Volume to Capacity	0.07	0.03	0.06
Queue Length 95th (ft)	6	2	0
Control Delay (s)	10.5	0.8	0.0
Lane LOS	B	A	
Approach Delay (s)	10.5	0.8	0.0
Approach LOS	B		

Intersection Summary			
Average Delay	1.3		
Intersection Capacity Utilization	46.3%	ICU Level of Service	A
Analysis Period (min)	15		

Movement	WBL	WBR	NBT	NBR	SBL	SBT
Lane Configurations						
Volume (veh/h)	37	45	469	26	11	90
Sign Control	Stop		Free			Free
Grade	0%		0%			0%
Peak Hour Factor	0.89	0.89	0.89	0.89	0.89	0.89
Hourly flow rate (vph)	49	59	617	34	14	118
Pedestrians						
Lane Width (ft)						
Walking Speed (ft/s)						
Percent Blockage						
Right turn flare (veh)						
Median type			None			None
Median storage veh)						
Upstream signal (ft)						
pX, platoon unblocked						
vC, conflicting volume	781	634			651	
vC1, stage 1 conf vol						
vC2, stage 2 conf vol						
vCu, unblocked vol	781	634			651	
tC, single (s)	6.4	6.2			4.1	
tC, 2 stage (s)						
tF (s)	3.5	3.3			2.2	
p0 queue free %	86	88			98	
cM capacity (veh/h)	358	479			936	

Direction, Lane #	WB 1	NB 1	SB 1
Volume Total	108	651	133
Volume Left	49	0	14
Volume Right	59	34	0
cSH	416	1700	936
Volume to Capacity	0.26	0.38	0.02
Queue Length 95th (ft)	26	0	1
Control Delay (s)	16.7	0.0	1.1
Lane LOS	C		A
Approach Delay (s)	16.7	0.0	1.1
Approach LOS	C		

Intersection Summary			
Average Delay	2.2		
Intersection Capacity Utilization	43.0%	ICU Level of Service	A
Analysis Period (min)	15		

Movement	EBL	EBR	NBL	NBT	SBT	SBR
Lane Configurations						
Volume (veh/h)	5	21	15	526	123	0
Sign Control	Stop			Free	Free	
Grade	0%			0%	0%	
Peak Hour Factor	0.95	0.95	0.95	0.95	0.95	0.95
Hourly flow rate (vph)	6	26	18	648	151	0
Pedestrians						
Lane Width (ft)						
Walking Speed (ft/s)						
Percent Blockage						
Right turn flare (veh)						
Median type				None	None	
Median storage veh)						
Upstream signal (ft)				1230		
pX, platoon unblocked	0.79					
vC, conflicting volume	836	151	151			
vC1, stage 1 conf vol						
vC2, stage 2 conf vol						
vCu, unblocked vol	660	151	151			
tC, single (s)	6.4	6.2	4.1			
tC, 2 stage (s)						
tF (s)	3.5	3.3	2.2			
p0 queue free %	98	97	99			
cM capacity (veh/h)	334	895	1429			

Direction, Lane #	EB 1	NB 1	SB 1
Volume Total	32	666	151
Volume Left	6	18	0
Volume Right	26	0	0
cSH	676	1429	1700
Volume to Capacity	0.05	0.01	0.09
Queue Length 95th (ft)	4	1	0
Control Delay (s)	10.6	0.4	0.0
Lane LOS	B	A	
Approach Delay (s)	10.6	0.4	0.0
Approach LOS	B		

Intersection Summary			
Average Delay	0.7		
Intersection Capacity Utilization	54.3%	ICU Level of Service	A
Analysis Period (min)	15		

Movement	EBL	EBT	EBR	WBL	WBT	WBR	NBL	NBT	NBR	SBL	SBT	SBR
Lane Configurations												
Volume (veh/h)	11	3	7	5	8	30	10	511	0	8	140	6
Sign Control		Stop			Stop			Free			Free	
Grade		0%			0%			0%			0%	
Peak Hour Factor	0.93	0.93	0.93	0.93	0.93	0.93	0.93	0.93	0.93	0.93	0.93	0.93
Hourly flow rate (vph)	14	4	9	6	10	38	13	643	0	10	176	8
Pedestrians												
Lane Width (ft)												
Walking Speed (ft/s)												
Percent Blockage												
Right turn flare (veh)												
Median type								None			None	
Median storage veh)												
Upstream signal (ft)								904				
pX, platoon unblocked	0.78	0.78		0.78	0.78	0.78				0.78		
vC, conflicting volume	911	868	180	879	872	643	184			643		
vC1, stage 1 conf vol												
vC2, stage 2 conf vol												
vCu, unblocked vol	747	692	180	706	697	404	184			404		
tC, single (s)	7.1	6.5	6.2	7.1	6.5	6.2	4.1			4.1		
tC, 2 stage (s)												
tF (s)	3.5	4.0	3.3	3.5	4.0	3.3	2.2			2.2		
p0 queue free %	94	99	99	98	96	93	99			99		
cM capacity (veh/h)	228	281	863	265	280	506	1391			903		

Direction, Lane #	EB 1	WB 1	NB 1	SB 1
Volume Total	26	54	655	194
Volume Left	14	6	13	10
Volume Right	9	38	0	8
cSH	314	402	1391	903
Volume to Capacity	0.08	0.13	0.01	0.01
Queue Length 95th (ft)	7	12	1	1
Control Delay (s)	17.5	15.3	0.3	0.6
Lane LOS	C	C	A	A
Approach Delay (s)	17.5	15.3	0.3	0.6
Approach LOS	C	C		

Intersection Summary			
Average Delay	1.7		
Intersection Capacity Utilization	46.2%	ICU Level of Service	A
Analysis Period (min)	15		

Movement	EBL	EBT	EBR	WBL	WBT	WBR	NBL	NBT	NBR	SBL	SBT	SBR
Lane Configurations												
Volume (veh/h)	5	1	2	1	4	3	2	519	2	1	142	5
Sign Control		Stop			Stop			Free			Free	
Grade		0%			0%			0%			0%	
Peak Hour Factor	0.91	0.91	0.91	0.91	0.91	0.91	0.91	0.91	0.91	0.91	0.91	0.91
Hourly flow rate (vph)	6	1	3	1	5	4	3	667	3	1	183	6
Pedestrians												
Lane Width (ft)												
Walking Speed (ft/s)												
Percent Blockage												
Right turn flare (veh)												
Median type								None			None	
Median storage veh)												
Upstream signal (ft)								601				
pX, platoon unblocked	0.79	0.79		0.79	0.79	0.79				0.79		
vC, conflicting volume	869	863	186	865	865	669	189			670		
vC1, stage 1 conf vol												
vC2, stage 2 conf vol												
vCu, unblocked vol	696	690	186	692	692	442	189			444		
tC, single (s)	7.1	6.5	6.2	7.1	6.5	6.2	4.1			4.1		
tC, 2 stage (s)												
tF (s)	3.5	4.0	3.3	3.5	4.0	3.3	2.2			2.2		
p0 queue free %	98	100	100	100	98	99	100			100		
cM capacity (veh/h)	273	288	856	279	288	484	1385			877		

Direction, Lane #	EB 1	WB 1	NB 1	SB 1
Volume Total	10	10	672	190
Volume Left	6	1	3	1
Volume Right	3	4	3	6
cSH	332	338	1385	877
Volume to Capacity	0.03	0.03	0.00	0.00
Queue Length 95th (ft)	2	2	0	0
Control Delay (s)	16.2	16.0	0.1	0.1
Lane LOS	C	C	A	A
Approach Delay (s)	16.2	16.0	0.1	0.1
Approach LOS	C	C		

Intersection Summary			
Average Delay	0.4		
Intersection Capacity Utilization	43.6%	ICU Level of Service	A
Analysis Period (min)	15		

Movement	EBL	EBT	EBR	WBL	WBT	WBR	NBL	NBT	NBR	SBL	SBT	SBR
Lane Configurations												
Volume (veh/h)	2	3	29	0	1	3	15	504	3	3	140	6
Sign Control		Stop			Stop			Free			Free	
Grade		0%			0%			0%			0%	
Peak Hour Factor	0.94	0.94	0.94	0.94	0.94	0.94	0.94	0.94	0.94	0.94	0.94	0.94
Hourly flow rate (vph)	2	4	36	0	1	4	19	627	4	4	174	7
Pedestrians												
Lane Width (ft)												
Walking Speed (ft/s)												
Percent Blockage												
Right turn flare (veh)												
Median type								None			None	
Median storage veh)												
Upstream signal (ft)								300				
pX, platoon unblocked	0.79	0.79		0.79	0.79	0.79				0.79		
vC, conflicting volume	856	854	178	890	856	629	182			631		
vC1, stage 1 conf vol												
vC2, stage 2 conf vol												
vCu, unblocked vol	690	687	178	732	689	404	182			407		
tC, single (s)	7.1	6.5	6.2	7.1	6.5	6.2	4.1			4.1		
tC, 2 stage (s)												
tF (s)	3.5	4.0	3.3	3.5	4.0	3.3	2.2			2.2		
p0 queue free %	99	99	96	100	100	99	99			100		
cM capacity (veh/h)	279	289	865	250	288	514	1393			916		

Direction, Lane #	EB 1	WB 1	NB 1	SB 1
Volume Total	42	5	650	185
Volume Left	2	0	19	4
Volume Right	36	4	4	7
cSH	665	429	1393	916
Volume to Capacity	0.06	0.01	0.01	0.00
Queue Length 95th (ft)	5	1	1	0
Control Delay (s)	10.8	13.5	0.4	0.2
Lane LOS	B	B	A	A
Approach Delay (s)	10.8	13.5	0.4	0.2
Approach LOS	B	B		

Intersection Summary			
Average Delay	0.9		
Intersection Capacity Utilization	51.3%	ICU Level of Service	A
Analysis Period (min)	15		

Lane Group	EBL	EBT	EBR	WBL	WBT	NBL	NBT	SBL	SBT
Lane Group Flow (vph)	53	468	123	80	637	243	632	33	162
v/c Ratio	0.13	0.77	0.24	0.22	0.53	0.43	0.71	0.08	0.20
Control Delay	16.4	40.6	8.2	17.5	29.2	22.6	40.5	19.0	34.0
Queue Delay	0.0	0.0	0.0	0.0	0.0	0.0	0.0	0.0	0.0
Total Delay	16.4	40.6	8.2	17.5	29.2	22.6	40.5	19.0	34.0
Queue Length 50th (ft)	20	265	3	31	194	112	198	13	49
Queue Length 95th (ft)	42	374	49	58	251	176	263	33	80
Internal Link Dist (ft)		1915			422		229		156
Turn Bay Length (ft)	130			95		155		130	
Base Capacity (vph)	443	724	599	365	1423	567	1023	418	943
Starvation Cap Reductn	0	0	0	0	0	0	0	0	0
Spillback Cap Reductn	0	0	0	0	0	0	0	0	0
Storage Cap Reductn	0	0	0	0	0	0	0	0	0
Reduced v/c Ratio	0.12	0.65	0.21	0.22	0.45	0.43	0.62	0.08	0.17

Intersection Summary

Movement	EBL	EBT	EBR	WBL	WBT	WBR	NBL	NBT	NBR	SBL	SBT	SBR
Lane Configurations												
Volume (vph)	43	380	100	65	466	51	197	440	73	27	130	2
Ideal Flow (vphpl)	1900	1900	1900	1900	1900	1900	1900	1900	1900	1900	1900	1900
Total Lost time (s)	3.0	3.0	5.0	3.0	3.0		3.0	3.0		3.0	3.0	
Lane Util. Factor	1.00	1.00	1.00	1.00	0.95		1.00	0.95		1.00	0.95	
Frt	1.00	1.00	0.85	1.00	0.99		1.00	0.98		1.00	1.00	
Flt Protected	0.95	1.00	1.00	0.95	1.00		0.95	1.00		0.95	1.00	
Satd. Flow (prot)	1770	1863	1583	1770	3487		1770	3464		1770	3533	
Flt Permitted	0.31	1.00	1.00	0.33	1.00		0.65	1.00		0.37	1.00	
Satd. Flow (perm)	582	1863	1583	618	3487		1210	3464		687	3533	
Peak-hour factor, PHF	0.95	0.95	0.95	0.95	0.95	0.95	0.95	0.95	0.95	0.95	0.95	0.95
Growth Factor (vph)	117%	117%	117%	117%	117%	117%	117%	117%	117%	117%	117%	117%
Adj. Flow (vph)	53	468	123	80	574	63	243	542	90	33	160	2
RTOR Reduction (vph)	0	0	87	0	7	0	0	11	0	0	1	0
Lane Group Flow (vph)	53	468	36	80	630	0	243	621	0	33	161	0
Turn Type	custom	NA	custom	custom	NA		custom	NA		custom	NA	
Protected Phases	1 2	2 4		1 3	3 4		5 6	6 8		5 7	7 8	
Permitted Phases	4		4	4			8			8		
Actuated Green, G (s)	39.6	31.3	27.2	36.2	33.9		36.7	22.2		31.0	22.5	
Effective Green, g (s)	39.6	31.3	27.2	36.2	33.9		36.7	22.2		31.0	22.5	
Actuated g/C Ratio	0.38	0.30	0.26	0.35	0.32		0.35	0.21		0.30	0.22	
Clearance Time (s)			5.0									
Vehicle Extension (s)			3.0									
Lane Grp Cap (vph)	361	557	412	313	1130		531	735		350	760	
v/s Ratio Prot	0.02	c0.25		c0.02	c0.18		c0.09	c0.18		0.01	c0.05	
v/s Ratio Perm	0.04		0.02	0.07			0.07			0.02		
v/c Ratio	0.15	0.84	0.09	0.26	0.56		0.46	0.84		0.09	0.21	
Uniform Delay, d1	21.0	34.3	29.3	23.8	29.2		25.5	39.5		26.4	33.8	
Progression Factor	1.00	1.00	1.00	1.00	1.00		1.00	1.00		1.00	1.00	
Incremental Delay, d2	0.2	11.0	0.1	0.4	0.6		0.6	8.8		0.1	0.1	
Delay (s)	21.2	45.3	29.4	24.3	29.8		26.2	48.4		26.5	33.9	
Level of Service	C	D	C	C	C		C	D		C	C	
Approach Delay (s)		40.3			29.1			42.2			32.7	
Approach LOS		D			C			D			C	

Intersection Summary			
HCM Average Control Delay	37.1	HCM Level of Service	D
HCM Volume to Capacity ratio	0.68		
Actuated Cycle Length (s)	104.6	Sum of lost time (s)	24.0
Intersection Capacity Utilization	62.1%	ICU Level of Service	B
Analysis Period (min)	15		

c Critical Lane Group

Movement	EBL	EBT	WBT	WBR	SBL	SBR
Lane Configurations						
Volume (veh/h)	5	494	619	27	5	4
Sign Control		Free	Free		Stop	
Grade		0%	0%		0%	
Peak Hour Factor	0.88	0.88	0.88	0.88	0.88	0.88
Hourly flow rate (vph)	7	657	823	36	7	5
Pedestrians						
Lane Width (ft)						
Walking Speed (ft/s)						
Percent Blockage						
Right turn flare (veh)						
Median type		None	None			
Median storage veh)						
Upstream signal (ft)		502				
pX, platoon unblocked					0.76	
vC, conflicting volume	859				1511	841
vC1, stage 1 conf vol						
vC2, stage 2 conf vol						
vCu, unblocked vol	859				1515	841
tC, single (s)	4.1				6.4	6.2
tC, 2 stage (s)						
tF (s)	2.2				3.5	3.3
p0 queue free %	99				93	99
cM capacity (veh/h)	782				99	365

Direction, Lane #	EB 1	EB 2	WB 1	SB 1
Volume Total	7	657	859	12
Volume Left	7	0	0	7
Volume Right	0	0	36	5
cSH	782	1700	1700	146
Volume to Capacity	0.01	0.39	0.51	0.08
Queue Length 95th (ft)	1	0	0	7
Control Delay (s)	9.6	0.0	0.0	31.8
Lane LOS	A			D
Approach Delay (s)	0.1		0.0	31.8
Approach LOS				D

Intersection Summary			
Average Delay	0.3		
Intersection Capacity Utilization	50.0%	ICU Level of Service	A
Analysis Period (min)	15		

Lane Group	EBL	EBT	WBL	WBT	NBL	NBT	SBL	SBT
Lane Group Flow (vph)	489	609	192	659	71	2377	141	1796
v/c Ratio	1.07	0.66	0.70	1.14	0.61	1.14	1.02	0.84
Control Delay	119.2	60.5	81.0	143.3	48.0	113.5	120.9	48.1
Queue Delay	0.0	0.0	0.0	0.0	0.0	0.0	0.0	0.0
Total Delay	119.2	60.5	81.0	143.3	48.0	113.5	120.9	48.1
Queue Length 50th (ft)	~600	322	224	~470	41	~1128	~114	649
Queue Length 95th (ft)	#742	361	303	#544	75	#1068	#237	639
Internal Link Dist (ft)		364		1915		469		768
Turn Bay Length (ft)			286		160		130	
Base Capacity (vph)	458	916	275	577	118	2089	138	2133
Starvation Cap Reductn	0	0	0	0	0	0	0	0
Spillback Cap Reductn	0	0	0	0	0	0	0	0
Storage Cap Reductn	0	0	0	0	0	0	0	0
Reduced v/c Ratio	1.07	0.66	0.70	1.14	0.60	1.14	1.02	0.84

Intersection Summary

~ Volume exceeds capacity, queue is theoretically infinite.
Queue shown is maximum after two cycles.

95th percentile volume exceeds capacity, queue may be longer.
Queue shown is maximum after two cycles.

Movement	EBL	EBT	EBR	WBL	WBT	WBR	NBL	NBT	NBR	SBL	SBT	SBR
Lane Configurations												
Volume (vph)	351	433	4	153	452	6	51	1668	39	101	1168	121
Ideal Flow (vphpl)	1900	1900	1900	1900	1900	1900	1900	1900	1900	1900	1900	1900
Total Lost time (s)	5.0	5.0		5.0	5.0		3.0	5.0		3.0	5.0	
Lane Util. Factor	1.00	0.95		0.91	0.91		1.00	0.91		1.00	0.91	
Frt	1.00	1.00		1.00	1.00		1.00	1.00		1.00	0.99	
Flt Protected	0.95	1.00		0.95	1.00		0.95	1.00		0.95	1.00	
Satd. Flow (prot)	1770	3534		1610	3379		1770	5068		1770	5014	
Flt Permitted	0.95	1.00		0.95	1.00		0.06	1.00		0.06	1.00	
Satd. Flow (perm)	1770	3534		1610	3379		106	5068		103	5014	
Peak-hour factor, PHF	0.84	0.84	0.84	0.84	0.84	0.84	0.84	0.84	0.84	0.84	0.84	0.84
Growth Factor (vph)	117%	117%	117%	117%	117%	117%	117%	117%	117%	117%	117%	117%
Adj. Flow (vph)	489	603	6	213	630	8	71	2323	54	141	1627	169
RTOR Reduction (vph)	0	1	0	0	1	0	0	1	0	0	7	0
Lane Group Flow (vph)	489	608	0	192	658	0	71	2376	0	141	1789	0
Turn Type	Split	NA		Split	NA		pm+pt	NA		pm+pt	NA	
Protected Phases	4	4		8	8		5	2		1	6	
Permitted Phases							2			6		
Actuated Green, G (s)	44.0	44.0		29.0	29.0		76.9	70.0		81.1	72.1	
Effective Green, g (s)	44.0	44.0		29.0	29.0		76.9	70.0		81.1	72.1	
Actuated g/C Ratio	0.26	0.26		0.17	0.17		0.45	0.41		0.48	0.42	
Clearance Time (s)	5.0	5.0		5.0	5.0		3.0	5.0		3.0	5.0	
Vehicle Extension (s)	3.0	3.0		3.0	3.0		3.0	3.0		3.0	3.0	
Lane Grp Cap (vph)	458	915		275	576		115	2087		137	2127	
v/s Ratio Prot	c0.28	0.17		0.12	c0.19		0.02	c0.47		c0.05	0.36	
v/s Ratio Perm							0.25			0.43		
v/c Ratio	1.07	0.66		0.70	1.14		0.62	1.14		1.03	0.84	
Uniform Delay, d1	63.0	56.4		66.4	70.5		35.5	50.0		50.0	43.8	
Progression Factor	1.00	1.00		1.00	1.00		1.00	1.00		1.00	1.00	
Incremental Delay, d2	61.3	1.8		7.5	83.5		9.5	68.7		84.9	3.2	
Delay (s)	124.3	58.2		73.9	154.0		44.9	118.7		134.8	47.0	
Level of Service	F	E		E	F		D	F		F	D	
Approach Delay (s)		87.6			135.9			116.6			53.4	
Approach LOS		F			F			F			D	

Intersection Summary			
HCM Average Control Delay	94.8	HCM Level of Service	F
HCM Volume to Capacity ratio	1.13		
Actuated Cycle Length (s)	170.0	Sum of lost time (s)	21.0
Intersection Capacity Utilization	98.5%	ICU Level of Service	F
Analysis Period (min)	15		

c Critical Lane Group

Movement	EBL	EBT	EBR	WBL	WBT	WBR	NBL	NBT	NBR	SBL	SBT	SBR
Lane Configurations												
Volume (vph)	351	433	4	153	452	6	51	1668	39	101	1168	121
Movement Number	7	4	14	3	8	18	5	2	12	1	6	16
Initial Queue, veh	0	0	0	0	0	0	0	0	0	0	0	0
Ped-Bike Adj. Factor (A_pbT)	1.00		1.00	1.00		1.00	1.00		1.00	1.00		1.00
Parking, Bus Adj. Factors	1.00	1.00	1.00	1.00	1.00	1.00	1.00	1.00	1.00	1.00	1.00	1.00
Adj. Sat. Flow Rate, veh/h/ln	1863	1863	1863	1863	1863	1863	1863	1863	1863	1863	1863	1863
Lanes	1	2	0	1	2	0	1	3	0	1	3	0
Lane Assignment												
Capacity, veh/h	447	928	9	288	595	8	168	2187	51	143	2090	217
Proportion Arriving On Green	0.25	0.25	0.25	0.16	0.16	0.16	0.03	0.43	0.43	0.05	0.45	0.45
Movement Delay, s/veh	85.0	54.4	54.4	67.6	93.0	93.3	30.9	53.6	60.1	68.7	36.8	37.8
Movement LOS	F	D	D	E	F	F	C	D	E	E	D	D
Approach Volume, veh/h		938			727			2093			1655	
Approach Delay, s/veh		68.0			86.7			55.2			39.4	
Approach LOS		E			F			E			D	

Timer:	1	2	3	4	5	6	7	8
Assigned Phase	1	2	8	4	5	6		
Case No	1.1	4.0	10.0	10.0	1.1	4.0		
Phase Duration (G+Y+Rc), s	10.87	75.00	31.53	46.21	7.84	78.03		
Change Period (Y+Rc), s	3.00	5.00	5.00	5.00	3.00	5.00		
Max. Allowable Headway (MAH), s	4.00	3.92	3.93	3.95	4.00	3.92		
Maximum Green Setting (Gmax), s	9.00	70.00	29.00	44.00	7.00	72.00		
Max. Queue Clearance Time (g_c+I1), s	7.87	61.56	25.58	39.71	5.15	40.26		
Green Extension Time (g_e), s	0.03	7.51	0.95	1.50	0.02	22.56		
Probability of Phase Call (p_c)	0.996	1.000	1.000	1.000	0.937	1.000		
Probability of Max Out (p_x)	1.000	0.933	1.000	0.924	1.000	0.651		

Left-Turn Movement Data					
Assigned Movement	1		3	7	5
Mvmt. Sat Flow, veh/h	1774.04		1774.04	1774.04	1774.04

Through Movement Data					
Assigned Movement		2	8	4	6
Mvmt. Sat Flow, veh/h		5112.47	3668.23	3685.45	4682.32

Right-Turn Movement Data					
Assigned Movement		12	18	14	16
Mvmt. Sat Flow, veh/h		119.40	48.67	34.03	485.03

Left Lane Group Data								
Assigned Movement	1	0	3	7	5	0	0	0
Lane Assignment	L (Pr/Pm)		L	LL (Pr/Pm)				
Lanes in Group	1	0	1	1	1	0	0	0
Group Volume (v), veh/h	120.2	0.0	182.1	417.9	60.7	0.0	0.0	0.0
Group Sat. Flow (s), veh/h/ln	1774.0	0.0	1774.0	1774.0	1774.0	0.0	0.0	0.0
Queue Serve Time (g_s), s	5.9	0.0	15.7	37.7	3.1	0.0	0.0	0.0
Cycle Queue Clear Time (g_c), s	5.9	0.0	15.7	37.7	3.1	0.0	0.0	0.0

Perm LT Sat Flow Rate (s_l), veh/h/ln	207.8	0.0	1774.0	1774.0	337.1	0.0	0.0	0.0
Shared LT Sat Flow (s_sh), veh/h/ln	0.0	0.0	0.0	0.0	0.0	0.0	0.0	0.0
Perm LT Eff. Green (g_p), s	75.0	0.0	0.0	0.0	70.0	0.0	0.0	0.0
Perm LT Serve Time (g_u), s	10.4	0.0	0.0	0.0	34.8	0.0	0.0	0.0
Perm LT Que Serve Time (g_ps), s	10.4	0.0	0.0	0.0	7.7	0.0	0.0	0.0
Time to First Blk (g_f), s	0.0	0.0	0.0	0.0	0.0	0.0	0.0	0.0
Serve Time pre Blk (g_fs), s	0.0	0.0	0.0	0.0	0.0	0.0	0.0	0.0
Proportion LT Inside Lane (P_L)	1.000	0.000	1.000	1.000	1.000	0.000	0.000	0.000
Lane Group Capacity (c), veh/h	142.6	0.0	287.6	446.9	168.1	0.0	0.0	0.0
Volume-to-Capacity Ratio (X)	0.843	0.000	0.633	0.935	0.361	0.000	0.000	0.000
Available Capacity (c_a), veh/h	154.9	0.0	314.5	477.1	191.5	0.0	0.0	0.0
Upstream Filter Factor (I)	1.000	0.000	1.000	1.000	1.000	0.000	0.000	0.000
Uniform Delay (d1), s/veh	38.0	0.0	64.0	59.9	29.6	0.0	0.0	0.0
Incremental Delay (d2), s/veh	30.7	0.0	3.6	25.1	1.3	0.0	0.0	0.0
Initial Queue Delay (d3), s/veh	0.0	0.0	0.0	0.0	0.0	0.0	0.0	0.0
Control Delay (d), s/veh	68.7	0.0	67.6	85.0	30.9	0.0	0.0	0.0
First-Term Queue (Q1), veh/ln	2.5	0.0	7.1	17.0	1.4	0.0	0.0	0.0
Second-Term Queue (Q2), veh/ln	1.2	0.0	0.3	3.1	0.1	0.0	0.0	0.0
Third-Term Queue (Q3), veh/ln	0.0	0.0	0.0	0.0	0.0	0.0	0.0	0.0
Percentile bk-of-que factor (f_B%)	1.000	0.000	1.000	1.000	1.000	0.000	0.000	0.000
Percentile Back of Queue (Q%), veh/ln	3.7	0.0	7.4	20.1	1.4	0.0	0.0	0.0
Percentile Storage Ratio (RQ%)	0.73	0.00	0.66	1.48	0.23	0.00	0.00	0.00
Initial Queue (Qb), veh	0.0	0.0	0.0	0.0	0.0	0.0	0.0	0.0
Final (Residual) Queue (Qe), veh	0.0	0.0	0.0	0.0	0.0	0.0	0.0	0.0
Saturated Delay (ds), s/veh	0.0	0.0	0.0	0.0	0.0	0.0	0.0	0.0
Saturated Queue (Qs), veh	0.0	0.0	0.0	0.0	0.0	0.0	0.0	0.0
Saturated Capacity (cs), veh/h	0.0	0.0	0.0	0.0	0.0	0.0	0.0	0.0
Initial Queue Clear Time (tc), h	0.0	0.0	0.0	0.0	0.0	0.0	0.0	0.0
Middle Lane Group Data								
Assigned Movement	0	2	8	4	0	6	0	0
Lane Assignment		T	T	T		T		
Lanes in Group	0	2	1	1	0	2	0	0
Group Volume (v), veh/h	0.0	1316.0	273.1	260.4	0.0	1006.7	0.0	0.0
Group Sat. Flow (s), veh/h/ln	0.0	1695.1	1862.7	1862.7	0.0	1695.1	0.0	0.0
Queue Serve Time (g_s), s	0.0	59.4	23.6	19.9	0.0	38.3	0.0	0.0
Cycle Queue Clear Time (g_c), s	0.0	59.4	23.6	19.9	0.0	38.3	0.0	0.0
Lane Group Capacity (c), veh/h	0.0	1450.5	302.0	469.2	0.0	1513.3	0.0	0.0
Volume-to-Capacity Ratio (X)	0.000	0.907	0.904	0.555	0.000	0.665	0.000	0.000
Available Capacity (c_a), veh/h	0.0	1450.5	330.2	501.0	0.0	1513.3	0.0	0.0
Upstream Filter Factor (I)	0.000	1.000	1.000	1.000	0.000	1.000	0.000	0.000
Uniform Delay (d1), s/veh	0.0	43.8	67.3	53.2	0.0	35.7	0.0	0.0
Incremental Delay (d2), s/veh	0.0	9.8	25.7	1.2	0.0	1.1	0.0	0.0
Initial Queue Delay (d3), s/veh	0.0	0.0	0.0	0.0	0.0	0.0	0.0	0.0
Control Delay (d), s/veh	0.0	53.6	93.0	54.4	0.0	36.8	0.0	0.0
First-Term Queue (Q1), veh/ln	0.0	24.9	11.3	9.4	0.0	15.9	0.0	0.0
Second-Term Queue (Q2), veh/ln	0.0	2.0	2.2	0.2	0.0	0.2	0.0	0.0
Third-Term Queue (Q3), veh/ln	0.0	0.0	0.0	0.0	0.0	0.0	0.0	0.0
Percentile bk-of-que factor (f_B%)	0.000	1.000	1.000	1.000	0.000	1.000	0.000	0.000
Percentile Back of Queue (Q%), veh/ln	0.0	26.8	13.4	9.6	0.0	16.2	0.0	0.0
Percentile Storage Ratio (RQ%)	0.00	1.49	0.18	0.70	0.00	0.56	0.00	0.00

Initial Queue (Qb), veh	0.0	0.0	0.0	0.0	0.0	0.0	0.0	0.0
Final (Residual) Queue (Qe), veh	0.0	0.0	0.0	0.0	0.0	0.0	0.0	0.0
Saturated Delay (ds), s/veh	0.0	0.0	0.0	0.0	0.0	0.0	0.0	0.0
Saturated Queue (Qs), veh	0.0	0.0	0.0	0.0	0.0	0.0	0.0	0.0
Saturated Capacity (cs), veh/h	0.0	0.0	0.0	0.0	0.0	0.0	0.0	0.0
Initial Queue Clear Time (tc), h	0.0	0.0	0.0	0.0	0.0	0.0	0.0	0.0

Right Lane Group Data								
Assigned Movement	0	12	18	14	0	16	0	0
Lane Assignment		T+R	T+R	T+R		T+R		
Lanes in Group	0	1	1	1	0	1	0	0
Group Volume (v), veh/h	0.0	716.1	272.1	259.8	0.0	527.8	0.0	0.0
Group Sat. Flow (s), veh/h/ln	0.0	1841.7	1854.2	1856.7	0.0	1777.2	0.0	0.0
Queue Serve Time (g_s), s	0.0	59.6	23.6	19.9	0.0	38.3	0.0	0.0
Cycle Queue Clear Time (g_c), s	0.0	59.6	23.6	19.9	0.0	38.3	0.0	0.0
Prot RT Sat Flow Rate (s_R), veh/h/ln	0.0	0.0	0.0	0.0	0.0	0.0	0.0	0.0
Prot RT Eff. Green (g_R), s	0.0	0.0	0.0	0.0	0.0	0.0	0.0	0.0
Proportion RT Outside Lane (P_R)	0.000	0.065	0.026	0.018	0.000	0.273	0.000	0.000
Lane Group Capacity (c), veh/h	0.0	788.0	300.6	467.7	0.0	793.3	0.0	0.0
Volume-to-Capacity Ratio (X)	0.000	0.909	0.905	0.555	0.000	0.665	0.000	0.000
Available Capacity (c_a), veh/h	0.0	788.0	328.7	499.3	0.0	793.3	0.0	0.0
Upstream Filter Factor (I)	0.000	1.000	1.000	1.000	0.000	1.000	0.000	0.000
Uniform Delay (d1), s/veh	0.0	43.8	67.3	53.2	0.0	35.7	0.0	0.0
Incremental Delay (d2), s/veh	0.0	16.3	25.9	1.2	0.0	2.1	0.0	0.0
Initial Queue Delay (d3), s/veh	0.0	0.0	0.0	0.0	0.0	0.0	0.0	0.0
Control Delay (d), s/veh	0.0	60.1	93.3	54.4	0.0	37.8	0.0	0.0
First-Term Queue (Q1), veh/ln	0.0	27.1	11.2	9.4	0.0	16.7	0.0	0.0
Second-Term Queue (Q2), veh/ln	0.0	3.6	2.2	0.2	0.0	0.5	0.0	0.0
Third-Term Queue (Q3), veh/ln	0.0	0.0	0.0	0.0	0.0	0.0	0.0	0.0
Percentile bk-of-que factor (f_B%)	0.000	1.000	1.000	1.000	0.000	1.000	0.000	0.000
Percentile Back of Queue (Q%), veh/ln	0.0	30.7	13.4	9.6	0.0	17.2	0.0	0.0
Percentile Storage Ratio (RQ%)	0.00	1.70	0.18	0.70	0.00	0.60	0.00	0.00
Initial Queue (Qb), veh	0.0	0.0	0.0	0.0	0.0	0.0	0.0	0.0
Final (Residual) Queue (Qe), veh	0.0	0.0	0.0	0.0	0.0	0.0	0.0	0.0
Saturated Delay (ds), s/veh	0.0	0.0	0.0	0.0	0.0	0.0	0.0	0.0
Saturated Queue (Qs), veh	0.0	0.0	0.0	0.0	0.0	0.0	0.0	0.0
Saturated Capacity (cs), veh/h	0.0	0.0	0.0	0.0	0.0	0.0	0.0	0.0
Initial Queue Clear Time (tc), h	0.0	0.0	0.0	0.0	0.0	0.0	0.0	0.0

Intersection Summary	
HCM Average Control Delay	56.8
HCM Level of Service	E

Movement	EBL	EBT	EBR	WBL	WBT	WBR	NEL	NET	NER	SWL	SWT	SWR
Lane Configurations												
Volume (veh/h)	13	4	0	0	5	9	32	2305	19	0	0	0
Sign Control		Stop			Stop			Free			Free	
Grade		0%			0%			0%			0%	
Peak Hour Factor	0.96	0.96	0.96	0.96	0.96	0.96	0.96	0.96	0.96	0.96	0.96	0.96
Hourly flow rate (vph)	16	5	0	0	6	11	39	2809	23	0	0	0
Pedestrians												
Lane Width (ft)												
Walking Speed (ft/s)												
Percent Blockage												
Right turn flare (veh)												
Median type								None			None	
Median storage veh)												
Upstream signal (ft)												
pX, platoon unblocked												
vC, conflicting volume	1028	2910	0	2901	2899	948	0			2832		
vC1, stage 1 conf vol												
vC2, stage 2 conf vol												
vCu, unblocked vol	1028	2910	0	2901	2899	948	0			2832		
tC, single (s)	7.5	6.5	6.9	7.5	6.5	6.9	4.1			4.1		
tC, 2 stage (s)												
tF (s)	3.5	4.0	3.3	3.5	4.0	3.3	2.2			2.2		
p0 queue free %	87	67	100	100	60	96	98			100		
cM capacity (veh/h)	122	15	1084	5	15	262	1622			132		

Direction, Lane #	EB 1	WB 1	NE 1	NE 2	NE 3
Volume Total	21	17	741	1405	725
Volume Left	16	0	39	0	0
Volume Right	0	11	0	0	23
cSH	45	39	1622	1700	1700
Volume to Capacity	0.46	0.44	0.02	0.83	0.43
Queue Length 95th (ft)	41	38	2	0	0
Control Delay (s)	138.7	158.3	0.7	0.0	0.0
Lane LOS	F	F	A		
Approach Delay (s)	138.7	158.3	0.2		
Approach LOS	F	F			

Intersection Summary			
Average Delay	2.1		
Intersection Capacity Utilization	67.8%	ICU Level of Service	C
Analysis Period (min)	15		

Movement	EBL	EBT	EBR	WBL	WBT	WBR	NEL	NET	NER	SWL	SWT	SWR
Lane Configurations												
Volume (veh/h)	2	10	0	0	10	11	5	2325	21	0	0	0
Sign Control		Stop			Stop			Free			Free	
Grade		0%			0%			0%			0%	
Peak Hour Factor	0.93	0.93	0.93	0.93	0.93	0.93	0.93	0.93	0.93	0.93	0.93	0.93
Hourly flow rate (vph)	3	13	0	0	13	14	6	2925	26	0	0	0
Pedestrians												
Lane Width (ft)												
Walking Speed (ft/s)												
Percent Blockage												
Right turn flare (veh)												
Median type								None			None	
Median storage veh)												
Upstream signal (ft)												
pX, platoon unblocked												
vC, conflicting volume	1008	2964	0	2957	2951	988	0			2951		
vC1, stage 1 conf vol												
vC2, stage 2 conf vol												
vCu, unblocked vol	1008	2964	0	2957	2951	988	0			2951		
tC, single (s)	7.5	6.5	6.9	7.5	6.5	6.9	4.1			4.1		
tC, 2 stage (s)												
tF (s)	3.5	4.0	3.3	3.5	4.0	3.3	2.2			2.2		
p0 queue free %	95	10	100	100	12	94	100			100		
cM capacity (veh/h)	46	14	1084	1	14	246	1622			118		

Direction, Lane #	EB 1	WB 1	NE 1	NE 2	NE 3
Volume Total	15	26	738	1462	758
Volume Left	3	0	6	0	0
Volume Right	0	14	0	0	26
cSH	16	28	1622	1700	1700
Volume to Capacity	0.95	0.93	0.00	0.86	0.45
Queue Length 95th (ft)	58	76	0	0	0
Control Delay (s)	531.5	348.9	0.1	0.0	0.0
Lane LOS	F	F	A		
Approach Delay (s)	531.5	348.9	0.0		
Approach LOS	F	F			

Intersection Summary			
Average Delay	5.8		
Intersection Capacity Utilization	63.2%	ICU Level of Service	B
Analysis Period (min)	15		

HCM Unsignalized Intersection Capacity Analysis
1: SW 97th Ave. & SW 174th St.

2/11/2015

Movement	EBL	EBT	EBR	WBL	WBT	WBR	NBL	NBT	NBR	SBL	SBT	SBR
Lane Configurations												
Sign Control		Stop			Stop			Stop			Stop	
Volume (vph)	6	114	60	54	98	4	44	7	24	4	7	8
Peak Hour Factor	0.84	0.84	0.84	0.84	0.84	0.84	0.84	0.84	0.84	0.84	0.84	0.84
Hourly flow rate (vph)	8	159	84	75	136	6	61	10	33	6	10	11

Direction, Lane #	EB 1	WB 1	NB 1	SB 1
Volume Total (vph)	251	217	104	26
Volume Left (vph)	8	75	61	6
Volume Right (vph)	84	6	33	11
Hadj (s)	-0.16	0.09	-0.04	-0.18
Departure Headway (s)	4.3	4.6	5.0	4.9
Degree Utilization, x	0.30	0.28	0.14	0.04
Capacity (veh/h)	801	747	662	644
Control Delay (s)	9.2	9.4	8.8	8.1
Approach Delay (s)	9.2	9.4	8.8	8.1
Approach LOS	A	A	A	A

Intersection Summary			
Delay	9.1		
HCM Level of Service	A		
Intersection Capacity Utilization	43.2%	ICU Level of Service	A
Analysis Period (min)	15		

Lane Group	EBL	NBT	SBT	NET
Lane Group Flow (vph)	145	312	32	2466
v/c Ratio	0.73	0.64	0.10	0.83
Control Delay	78.3	21.6	48.5	26.8
Queue Delay	0.0	0.0	0.0	0.0
Total Delay	78.3	21.6	48.5	26.8
Queue Length 50th (ft)	125	66	24	628
Queue Length 95th (ft)	201	176	56	741
Internal Link Dist (ft)	257	1041	665	1300
Turn Bay Length (ft)				
Base Capacity (vph)	250	486	320	2955
Starvation Cap Reductn	0	0	0	0
Spillback Cap Reductn	0	0	0	0
Storage Cap Reductn	0	0	0	0
Reduced v/c Ratio	0.58	0.64	0.10	0.83

Intersection Summary

Movement	EBL	EBR	NBL	NBT	NBR	SBT	SBR	NEL2	NEL	NET	NER
Lane Configurations											
Volume (vph)	2	116	4	21	228	13	13	4	5	1968	25
Ideal Flow (vphpl)	1900	1900	1900	1900	1900	1900	1900	1900	1900	1900	1900
Total Lost time (s)	5.0			5.0		5.0				5.0	
Lane Util. Factor	1.00			1.00		1.00				0.91	
Frt	0.87			0.88		0.93				1.00	
Flt Protected	1.00			1.00		1.00				1.00	
Satd. Flow (prot)	1614			1635		1737				5075	
Flt Permitted	1.00			1.00		1.00				1.00	
Satd. Flow (perm)	1614			1631		1737				5075	
Peak-hour factor, PHF	0.95	0.95	0.95	0.95	0.95	0.95	0.95	0.95	0.95	0.95	0.95
Growth Factor (vph)	117%	117%	117%	117%	117%	117%	117%	117%	117%	117%	117%
Adj. Flow (vph)	2	143	5	26	281	16	16	5	6	2424	31
RTOR Reduction (vph)	0	0	0	185	0	0	0	0	0	1	0
Lane Group Flow (vph)	145	0	0	127	0	32	0	0	0	2465	0
Turn Type	NA		Perm	NA		NA		Perm	Perm	NA	
Protected Phases	3			4		8				6	
Permitted Phases			4					6	6		
Actuated Green, G (s)	16.7			25.0		25.0				79.1	
Effective Green, g (s)	16.7			25.0		25.0				79.1	
Actuated g/C Ratio	0.12			0.18		0.18				0.58	
Clearance Time (s)	5.0			5.0		5.0				5.0	
Vehicle Extension (s)	3.0			3.0		3.0				3.0	
Lane Grp Cap (vph)	198			300		320				2956	
v/s Ratio Prot	c0.09					0.02					
v/s Ratio Perm				c0.08						0.49	
v/c Ratio	0.73			0.42		0.10				0.83	
Uniform Delay, d1	57.4			49.0		46.0				23.0	
Progression Factor	1.00			1.00		1.00				1.00	
Incremental Delay, d2	13.1			4.3		0.6				2.9	
Delay (s)	70.5			53.3		46.7				26.0	
Level of Service	E			D		D				C	
Approach Delay (s)	70.5			53.3		46.7				26.0	
Approach LOS	E			D		D				C	

Intersection Summary			
HCM Average Control Delay	31.3	HCM Level of Service	C
HCM Volume to Capacity ratio	0.73		
Actuated Cycle Length (s)	135.8	Sum of lost time (s)	15.0
Intersection Capacity Utilization	88.4%	ICU Level of Service	E
Analysis Period (min)	15		

c Critical Lane Group

Movement	EBL	EBR	NBL	NBT	SBT	SBR
Lane Configurations						
Volume (veh/h)	6	32	28	264	140	5
Sign Control	Stop			Free	Free	
Grade	0%			0%	0%	
Peak Hour Factor	0.93	0.93	0.93	0.93	0.93	0.93
Hourly flow rate (vph)	8	40	35	332	176	6
Pedestrians						
Lane Width (ft)						
Walking Speed (ft/s)						
Percent Blockage						
Right turn flare (veh)						
Median type				None	None	
Median storage veh)						
Upstream signal (ft)					1121	
pX, platoon unblocked						
vC, conflicting volume	582	179	182			
vC1, stage 1 conf vol						
vC2, stage 2 conf vol						
vCu, unblocked vol	582	179	182			
tC, single (s)	6.4	6.2	4.1			
tC, 2 stage (s)						
tF (s)	3.5	3.3	2.2			
p0 queue free %	98	95	97			
cM capacity (veh/h)	463	864	1393			

Direction, Lane #	EB 1	NB 1	SB 1
Volume Total	48	367	182
Volume Left	8	35	0
Volume Right	40	0	6
cSH	760	1393	1700
Volume to Capacity	0.06	0.03	0.11
Queue Length 95th (ft)	5	2	0
Control Delay (s)	10.1	1.0	0.0
Lane LOS	B	A	
Approach Delay (s)	10.1	1.0	0.0
Approach LOS	B		

Intersection Summary			
Average Delay	1.4		
Intersection Capacity Utilization	40.4%	ICU Level of Service	A
Analysis Period (min)	15		

Movement	WBL	WBR	NBT	NBR	SBL	SBT
Lane Configurations						
Volume (veh/h)	39	32	268	11	24	136
Sign Control	Stop		Free			Free
Grade	0%		0%			0%
Peak Hour Factor	0.97	0.97	0.97	0.97	0.97	0.97
Hourly flow rate (vph)	47	39	323	13	29	164
Pedestrians						
Lane Width (ft)						
Walking Speed (ft/s)						
Percent Blockage						
Right turn flare (veh)						
Median type			None			None
Median storage veh)						
Upstream signal (ft)						
pX, platoon unblocked						
vC, conflicting volume	552	330			337	
vC1, stage 1 conf vol						
vC2, stage 2 conf vol						
vCu, unblocked vol	552	330			337	
tC, single (s)	6.4	6.2			4.1	
tC, 2 stage (s)						
tF (s)	3.5	3.3			2.2	
p0 queue free %	90	95			98	
cM capacity (veh/h)	483	712			1223	

Direction, Lane #	WB 1	NB 1	SB 1
Volume Total	86	337	193
Volume Left	47	0	29
Volume Right	39	13	0
cSH	565	1700	1223
Volume to Capacity	0.15	0.20	0.02
Queue Length 95th (ft)	13	0	2
Control Delay (s)	12.5	0.0	1.4
Lane LOS	B		A
Approach Delay (s)	12.5	0.0	1.4
Approach LOS	B		

Intersection Summary			
Average Delay	2.2		
Intersection Capacity Utilization	42.0%	ICU Level of Service	A
Analysis Period (min)	15		

Movement	EBL	EBR	NBL	NBT	SBT	SBR
Lane Configurations						
Volume (veh/h)	9	23	6	291	166	2
Sign Control	Stop			Free	Free	
Grade	0%			0%	0%	
Peak Hour Factor	0.94	0.94	0.94	0.94	0.94	0.94
Hourly flow rate (vph)	11	29	7	362	207	2
Pedestrians						
Lane Width (ft)						
Walking Speed (ft/s)						
Percent Blockage						
Right turn flare (veh)						
Median type				None	None	
Median storage veh)						
Upstream signal (ft)				1230		
pX, platoon unblocked	0.92					
vC, conflicting volume	585	208	209			
vC1, stage 1 conf vol						
vC2, stage 2 conf vol						
vCu, unblocked vol	503	208	209			
tC, single (s)	6.4	6.2	4.1			
tC, 2 stage (s)						
tF (s)	3.5	3.3	2.2			
p0 queue free %	98	97	99			
cM capacity (veh/h)	482	833	1362			

Direction, Lane #	EB 1	NB 1	SB 1
Volume Total	40	370	209
Volume Left	11	7	0
Volume Right	29	0	2
cSH	691	1362	1700
Volume to Capacity	0.06	0.01	0.12
Queue Length 95th (ft)	5	0	0
Control Delay (s)	10.5	0.2	0.0
Lane LOS	B	A	
Approach Delay (s)	10.5	0.2	0.0
Approach LOS	B		

Intersection Summary			
Average Delay	0.8		
Intersection Capacity Utilization	33.5%	ICU Level of Service	A
Analysis Period (min)	15		

Movement	EBL	EBT	EBR	WBL	WBT	WBR	NBL	NBT	NBR	SBL	SBT	SBR
Lane Configurations												
Volume (veh/h)	1	0	6	5	2	3	5	303	5	2	193	6
Sign Control		Stop			Stop			Free			Free	
Grade		0%			0%			0%			0%	
Peak Hour Factor	0.92	0.92	0.92	0.92	0.92	0.92	0.92	0.92	0.92	0.92	0.92	0.92
Hourly flow rate (vph)	1	0	8	6	3	4	6	385	6	3	245	8
Pedestrians												
Lane Width (ft)												
Walking Speed (ft/s)												
Percent Blockage												
Right turn flare (veh)												
Median type								None			None	
Median storage veh)												
Upstream signal (ft)								904				
pX, platoon unblocked	0.89	0.89		0.89	0.89	0.89				0.89		
vC, conflicting volume	661	659	249	663	659	389	253			392		
vC1, stage 1 conf vol												
vC2, stage 2 conf vol												
vCu, unblocked vol	552	550	249	555	551	245	253			248		
tC, single (s)	7.1	6.5	6.2	7.1	6.5	6.2	4.1			4.1		
tC, 2 stage (s)												
tF (s)	3.5	4.0	3.3	3.5	4.0	3.3	2.2			2.2		
p0 queue free %	100	100	99	98	99	99	100			100		
cM capacity (veh/h)	387	389	789	386	389	703	1312			1167		

Direction, Lane #	EB 1	WB 1	NB 1	SB 1
Volume Total	9	13	398	256
Volume Left	1	6	6	3
Volume Right	8	4	6	8
cSH	687	447	1312	1167
Volume to Capacity	0.01	0.03	0.00	0.00
Queue Length 95th (ft)	1	2	0	0
Control Delay (s)	10.3	13.3	0.2	0.1
Lane LOS	B	B	A	A
Approach Delay (s)	10.3	13.3	0.2	0.1
Approach LOS	B	B		

Intersection Summary			
Average Delay	0.5		
Intersection Capacity Utilization	32.6%	ICU Level of Service	A
Analysis Period (min)	15		

Movement	EBL	EBT	EBR	WBL	WBT	WBR	NBL	NBT	NBR	SBL	SBT	SBR
Lane Configurations												
Volume (veh/h)	0	0	2	1	1	2	2	311	1	1	211	2
Sign Control		Stop			Stop			Free			Free	
Grade		0%			0%			0%			0%	
Peak Hour Factor	0.95	0.95	0.95	0.95	0.95	0.95	0.95	0.95	0.95	0.95	0.95	0.95
Hourly flow rate (vph)	0	0	2	1	1	2	2	383	1	1	260	2
Pedestrians												
Lane Width (ft)												
Walking Speed (ft/s)												
Percent Blockage												
Right turn flare (veh)												
Median type								None			None	
Median storage veh)												
Upstream signal (ft)								601				
pX, platoon unblocked	0.88	0.88		0.88	0.88	0.88				0.88		
vC, conflicting volume	655	653	261	655	653	384	262			384		
vC1, stage 1 conf vol												
vC2, stage 2 conf vol												
vCu, unblocked vol	541	538	261	540	539	233	262			234		
tC, single (s)	7.1	6.5	6.2	7.1	6.5	6.2	4.1			4.1		
tC, 2 stage (s)												
tF (s)	3.5	4.0	3.3	3.5	4.0	3.3	2.2			2.2		
p0 queue free %	100	100	100	100	100	100	100			100		
cM capacity (veh/h)	395	395	778	396	395	710	1302			1175		

Direction, Lane #	EB 1	WB 1	NB 1	SB 1
Volume Total	2	5	387	264
Volume Left	0	1	2	1
Volume Right	2	2	1	2
cSH	778	508	1302	1175
Volume to Capacity	0.00	0.01	0.00	0.00
Queue Length 95th (ft)	0	1	0	0
Control Delay (s)	9.6	12.2	0.1	0.0
Lane LOS	A	B	A	A
Approach Delay (s)	9.6	12.2	0.1	0.0
Approach LOS	A	B		

Intersection Summary			
Average Delay	0.2		
Intersection Capacity Utilization	30.9%	ICU Level of Service	A
Analysis Period (min)	15		

Movement	EBL	EBT	EBR	WBL	WBT	WBR	NBL	NBT	NBR	SBL	SBT	SBR
Lane Configurations												
Volume (veh/h)	4	0	21	3	1	2	5	307	2	0	212	1
Sign Control		Stop			Stop			Free			Free	
Grade		0%			0%			0%			0%	
Peak Hour Factor	0.97	0.97	0.97	0.97	0.97	0.97	0.97	0.97	0.97	0.97	0.97	0.97
Hourly flow rate (vph)	5	0	25	4	1	2	6	370	2	0	256	1
Pedestrians												
Lane Width (ft)												
Walking Speed (ft/s)												
Percent Blockage												
Right turn flare (veh)												
Median type								None			None	
Median storage veh)												
Upstream signal (ft)								300				
pX, platoon unblocked	0.87	0.87		0.87	0.87	0.87				0.87		
vC, conflicting volume	643	641	256	665	640	372	257			373		
vC1, stage 1 conf vol												
vC2, stage 2 conf vol												
vCu, unblocked vol	520	518	256	545	517	210	257			211		
tC, single (s)	7.1	6.5	6.2	7.1	6.5	6.2	4.1			4.1		
tC, 2 stage (s)												
tF (s)	3.5	4.0	3.3	3.5	4.0	3.3	2.2			2.2		
p0 queue free %	99	100	97	99	100	100	100			100		
cM capacity (veh/h)	404	402	782	379	402	726	1308			1189		

Direction, Lane #	EB 1	WB 1	NB 1	SB 1
Volume Total	30	7	379	257
Volume Left	5	4	6	0
Volume Right	25	2	2	1
cSH	681	456	1308	1189
Volume to Capacity	0.04	0.02	0.00	0.00
Queue Length 95th (ft)	3	1	0	0
Control Delay (s)	10.5	13.0	0.2	0.0
Lane LOS	B	B	A	
Approach Delay (s)	10.5	13.0	0.2	0.0
Approach LOS	B	B		

Intersection Summary			
Average Delay	0.7		
Intersection Capacity Utilization	33.7%	ICU Level of Service	A
Analysis Period (min)	15		

Lane Group	EBL	EBT	EBR	WBL	WBT	NBL	NBT	SBL	SBT
Lane Group Flow (vph)	78	428	68	96	503	141	327	27	258
v/c Ratio	0.16	0.69	0.15	0.22	0.41	0.28	0.43	0.07	0.39
Control Delay	13.6	32.3	8.0	14.4	24.0	21.6	32.3	20.0	34.2
Queue Delay	0.0	0.0	0.0	0.0	0.0	0.0	0.0	0.0	0.0
Total Delay	13.6	32.3	8.0	14.4	24.0	21.6	32.3	20.0	34.2
Queue Length 50th (ft)	23	186	0	28	121	54	80	10	68
Queue Length 95th (ft)	52	306	33	61	182	110	135	30	118
Internal Link Dist (ft)		1915			422		229		156
Turn Bay Length (ft)	130			95		155		130	
Base Capacity (vph)	540	879	679	441	1729	493	1068	443	965
Starvation Cap Reductn	0	0	0	0	0	0	0	0	0
Spillback Cap Reductn	0	0	0	0	0	0	0	0	0
Storage Cap Reductn	0	0	0	0	0	0	0	0	0
Reduced v/c Ratio	0.14	0.49	0.10	0.22	0.29	0.29	0.31	0.06	0.27

Intersection Summary

Movement	EBL	EBT	EBR	WBL	WBT	WBR	NBL	NBT	NBR	SBL	SBT	SBR
Lane Configurations												
Volume (vph)	61	333	53	75	374	17	110	217	37	21	168	33
Ideal Flow (vphpl)	1900	1900	1900	1900	1900	1900	1900	1900	1900	1900	1900	1900
Total Lost time (s)	3.0	3.0	5.0	3.0	3.0		3.0	3.0		3.0	3.0	
Lane Util. Factor	1.00	1.00	1.00	1.00	0.95		1.00	0.95		1.00	0.95	
Frt	1.00	1.00	0.85	1.00	0.99		1.00	0.98		1.00	0.98	
Flt Protected	0.95	1.00	1.00	0.95	1.00		0.95	1.00		0.95	1.00	
Satd. Flow (prot)	1770	1863	1583	1770	3516		1770	3461		1770	3453	
Flt Permitted	0.45	1.00	1.00	0.44	1.00		0.59	1.00		0.55	1.00	
Satd. Flow (perm)	829	1863	1583	817	3516		1103	3461		1032	3453	
Peak-hour factor, PHF	0.91	0.91	0.91	0.91	0.91	0.91	0.91	0.91	0.91	0.91	0.91	0.91
Growth Factor (vph)	117%	117%	117%	117%	117%	117%	117%	117%	117%	117%	117%	117%
Adj. Flow (vph)	78	428	68	96	481	22	141	279	48	27	216	42
RTOR Reduction (vph)	0	0	51	0	3	0	0	12	0	0	14	0
Lane Group Flow (vph)	78	428	17	96	500	0	141	315	0	27	244	0
Turn Type	custom	NA	custom	custom	NA		custom	NA		custom	NA	
Protected Phases	1 2	2 4		1 3	3 4		5 6	6 8		5 7	7 8	
Permitted Phases	4		4	4			8			8		
Actuated Green, G (s)	36.6	28.3	24.1	33.1	30.8		28.8	16.2		23.1	16.5	
Effective Green, g (s)	36.6	28.3	24.1	33.1	30.8		28.8	16.2		23.1	16.5	
Actuated g/C Ratio	0.39	0.30	0.26	0.35	0.33		0.31	0.17		0.25	0.18	
Clearance Time (s)			5.0									
Vehicle Extension (s)			3.0									
Lane Grp Cap (vph)	449	563	407	380	1156		466	598		351	608	
v/s Ratio Prot	0.02	c0.23		c0.02	c0.14		c0.06	c0.09		0.01	c0.07	
v/s Ratio Perm	0.04		0.01	0.06			0.04			0.01		
v/c Ratio	0.17	0.76	0.04	0.25	0.43		0.30	0.53		0.08	0.40	
Uniform Delay, d1	18.2	29.6	26.1	20.8	24.6		24.4	35.3		27.0	34.2	
Progression Factor	1.00	1.00	1.00	1.00	1.00		1.00	1.00		1.00	1.00	
Incremental Delay, d2	0.2	6.0	0.0	0.4	0.3		0.4	0.8		0.1	0.4	
Delay (s)	18.4	35.6	26.2	21.1	24.9		24.8	36.1		27.1	34.7	
Level of Service	B	D	C	C	C		C	D		C	C	
Approach Delay (s)		32.2			24.3			32.7			33.9	
Approach LOS		C			C			C			C	

Intersection Summary			
HCM Average Control Delay	30.1	HCM Level of Service	C
HCM Volume to Capacity ratio	0.54		
Actuated Cycle Length (s)	93.7	Sum of lost time (s)	24.0
Intersection Capacity Utilization	52.5%	ICU Level of Service	A
Analysis Period (min)	15		

c Critical Lane Group

Movement	EBL	EBT	WBT	WBR	SBL	SBR
Lane Configurations						
Volume (veh/h)	3	403	477	8	6	1
Sign Control		Free	Free		Stop	
Grade		0%	0%		0%	
Peak Hour Factor	0.94	0.94	0.94	0.94	0.94	0.94
Hourly flow rate (vph)	4	502	594	10	7	1
Pedestrians						
Lane Width (ft)						
Walking Speed (ft/s)						
Percent Blockage						
Right turn flare (veh)						
Median type		None	None			
Median storage veh)						
Upstream signal (ft)		502				
pX, platoon unblocked					0.79	
vC, conflicting volume	604				1108	599
vC1, stage 1 conf vol						
vC2, stage 2 conf vol						
vCu, unblocked vol	604				1001	599
tC, single (s)	4.1				6.4	6.2
tC, 2 stage (s)						
tF (s)	2.2				3.5	3.3
p0 queue free %	100				96	100
cM capacity (veh/h)	974				211	502

Direction, Lane #	EB 1	EB 2	WB 1	SB 1
Volume Total	4	502	604	9
Volume Left	4	0	0	7
Volume Right	0	0	10	1
cSH	974	1700	1700	230
Volume to Capacity	0.00	0.30	0.36	0.04
Queue Length 95th (ft)	0	0	0	3
Control Delay (s)	8.7	0.0	0.0	21.3
Lane LOS	A			C
Approach Delay (s)	0.1		0.0	21.3
Approach LOS				C

Intersection Summary			
Average Delay	0.2		
Intersection Capacity Utilization	39.9%	ICU Level of Service	A
Analysis Period (min)	15		

Lane Group	EBL	EBT	WBL	WBT	NBL	NBT	SBL	SBT
Lane Group Flow (vph)	319	491	276	567	143	1890	219	2195
v/c Ratio	0.97	0.75	0.96	0.95	0.92	0.92	0.94	0.97
Control Delay	98.7	58.7	100.0	82.7	83.5	47.5	82.6	50.4
Queue Delay	0.0	0.0	0.0	0.0	0.0	0.0	0.0	0.0
Total Delay	98.7	58.7	100.0	82.7	83.5	47.5	82.6	50.4
Queue Length 50th (ft)	292	212	276	282	78	589	147	699
Queue Length 95th (ft)	#485	277	#478	#405	#215	661	#311	#824
Internal Link Dist (ft)		364		1915		469		768
Turn Bay Length (ft)			286		160		130	
Base Capacity (vph)	329	656	288	597	156	2054	232	2262
Starvation Cap Reductn	0	0	0	0	0	0	0	0
Spillback Cap Reductn	0	0	0	0	0	0	0	0
Storage Cap Reductn	0	0	0	0	0	0	0	0
Reduced v/c Ratio	0.97	0.75	0.96	0.95	0.92	0.92	0.94	0.97

Intersection Summary

95th percentile volume exceeds capacity, queue may be longer.
Queue shown is maximum after two cycles.

Movement	EBL	EBT	EBR	WBL	WBT	WBR	NBL	NBT	NBR	SBL	SBT	SBR
Lane Configurations												
Volume (vph)	256	296	99	321	340	16	115	1405	113	176	1558	206
Ideal Flow (vphpl)	1900	1900	1900	1900	1900	1900	1900	1900	1900	1900	1900	1900
Total Lost time (s)	5.0	5.0		5.0	5.0		3.0	5.0		3.0	5.0	
Lane Util. Factor	1.00	0.95		0.91	0.91		1.00	0.91		1.00	0.91	
Frt	1.00	0.96		1.00	0.99		1.00	0.99		1.00	0.98	
Flt Protected	0.95	1.00		0.95	0.99		0.95	1.00		0.95	1.00	
Satd. Flow (prot)	1770	3406		1610	3336		1770	5028		1770	4996	
Flt Permitted	0.95	1.00		0.95	0.99		0.07	1.00		0.07	1.00	
Satd. Flow (perm)	1770	3406		1610	3336		131	5028		124	4996	
Peak-hour factor, PHF	0.94	0.94	0.94	0.94	0.94	0.94	0.94	0.94	0.94	0.94	0.94	0.94
Growth Factor (vph)	117%	117%	117%	117%	117%	117%	117%	117%	117%	117%	117%	117%
Adj. Flow (vph)	319	368	123	400	423	20	143	1749	141	219	1939	256
RTOR Reduction (vph)	0	24	0	0	2	0	0	7	0	0	12	0
Lane Group Flow (vph)	319	467	0	276	565	0	143	1883	0	219	2183	0
Turn Type	Split	NA		Split	NA		pm+pt	NA		pm+pt	NA	
Protected Phases	4	4		8	8		5	2		1	6	
Permitted Phases							2			6		
Actuated Green, G (s)	26.0	26.0		25.0	25.0		65.0	57.0		74.0	63.0	
Effective Green, g (s)	26.0	26.0		25.0	25.0		65.0	57.0		74.0	63.0	
Actuated g/C Ratio	0.19	0.19		0.18	0.18		0.46	0.41		0.53	0.45	
Clearance Time (s)	5.0	5.0		5.0	5.0		3.0	5.0		3.0	5.0	
Vehicle Extension (s)	3.0	3.0		3.0	3.0		3.0	3.0		3.0	3.0	
Lane Grp Cap (vph)	329	633		288	596		154	2047		230	2248	
v/s Ratio Prot	c0.18	0.14		c0.17	0.17		0.05	0.37		c0.10	c0.44	
v/s Ratio Perm							0.38			0.41		
v/c Ratio	0.97	0.74		0.96	0.95		0.93	0.92		0.95	0.97	
Uniform Delay, d1	56.6	53.8		57.0	56.9		35.2	39.3		43.7	37.6	
Progression Factor	1.00	1.00		1.00	1.00		1.00	1.00		1.00	1.00	
Incremental Delay, d2	40.9	4.5		41.3	24.5		51.1	8.2		45.8	12.9	
Delay (s)	97.5	58.3		98.3	81.3		86.4	47.6		89.5	50.5	
Level of Service	F	E		F	F		F	D		F	D	
Approach Delay (s)		73.7			86.9			50.3			54.0	
Approach LOS		E			F			D			D	

Intersection Summary			
HCM Average Control Delay	59.9	HCM Level of Service	E
HCM Volume to Capacity ratio	0.95		
Actuated Cycle Length (s)	140.0	Sum of lost time (s)	13.0
Intersection Capacity Utilization	95.5%	ICU Level of Service	F
Analysis Period (min)	15		

c Critical Lane Group

Movement	EBL	EBT	EBR	WBL	WBT	WBR	NBL	NBT	NBR	SBL	SBT	SBR
Lane Configurations												
Volume (vph)	256	296	99	321	340	16	115	1405	113	176	1558	206
Movement Number	7	4	14	3	8	18	5	2	12	1	6	16
Initial Queue, veh	0	0	0	0	0	0	0	0	0	0	0	0
Ped-Bike Adj. Factor (A_pbT)	1.00		1.00	1.00		1.00	1.00		1.00	1.00		1.00
Parking, Bus Adj. Factors	1.00	1.00	1.00	1.00	1.00	1.00	1.00	1.00	1.00	1.00	1.00	1.00
Adj. Sat. Flow Rate, veh/h/ln	1863	1863	1863	1863	1863	1863	1863	1863	1863	1863	1863	1863
Lanes	1	2	0	1	2	0	1	3	0	1	3	0
Lane Assignment												
Capacity, veh/h	307	465	153	335	666	31	180	2065	166	236	2043	269
Proportion Arriving On Green	0.17	0.17	0.17	0.19	0.19	0.19	0.05	0.43	0.43	0.07	0.45	0.45
Movement Delay, s/veh	74.8	55.2	56.5	108.0	50.2	50.3	37.4	34.4	37.0	38.1	34.7	37.6
Movement LOS	E	E	E	F	D	D	D	C	D	D	C	D
Approach Volume, veh/h		693			720			1737			2064	
Approach Delay, s/veh		63.3			77.7			35.4			35.9	
Approach LOS		E			E			D			D	

Timer:	1	2	3	4	5	6	7	8
Assigned Phase	1	2	8	4	5	6		
Case No	1.1	4.0	10.0	10.0	1.1	4.0		
Phase Duration (G+Y+Rc), s	12.52	62.00	30.00	27.92	10.02	64.50		
Change Period (Y+Rc), s	3.00	5.00	5.00	5.00	3.00	5.00		
Max. Allowable Headway (MAH), s	4.00	3.94	3.96	3.99	4.00	3.94		
Maximum Green Setting (Gmax), s	14.00	57.00	25.00	26.00	8.00	63.00		
Max. Queue Clearance Time (g_c+I1), s	9.31	36.14	27.00	21.86	7.07	44.05		
Green Extension Time (g_e), s	0.23	16.17	0.00	1.06	0.03	14.98		
Probability of Phase Call (p_c)	0.999	1.000	1.000	1.000	0.989	1.000		
Probability of Max Out (p_x)	0.592	0.754	1.000	0.955	1.000	0.779		

Left-Turn Movement Data					
Assigned Movement	1		3	7	5
Mvmt. Sat Flow, veh/h	1774.04		1774.04	1774.04	1774.04

Through Movement Data					
Assigned Movement		2	8	4	6
Mvmt. Sat Flow, veh/h		4798.99	3530.63	2687.70	4547.94

Right-Turn Movement Data					
Assigned Movement		12	18	14	16
Mvmt. Sat Flow, veh/h		385.86	165.63	882.12	599.25

Left Lane Group Data								
Assigned Movement	1	0	3	7	5	0	0	0
Lane Assignment	L (Pr/Pm)		L	LL (Pr/Pm)				
Lanes in Group	1	0	1	1	1	0	0	0
Group Volume (v), veh/h	187.2	0.0	341.5	272.3	122.3	0.0	0.0	0.0
Group Sat. Flow (s), veh/h/ln	1774.0	0.0	1774.0	1774.0	1774.0	0.0	0.0	0.0
Queue Serve Time (g_s), s	7.3	0.0	25.0	19.9	5.1	0.0	0.0	0.0
Cycle Queue Clear Time (g_c), s	7.3	0.0	25.0	19.9	5.1	0.0	0.0	0.0

Perm LT Sat Flow Rate (s_l), veh/h/ln	311.9	0.0	1774.0	1774.0	241.9	0.0	0.0	0.0
Shared LT Sat Flow (s_sh), veh/h/ln	0.0	0.0	0.0	0.0	0.0	0.0	0.0	0.0
Perm LT Eff. Green (g_p), s	61.0	0.0	0.0	0.0	57.0	0.0	0.0	0.0
Perm LT Serve Time (g_u), s	22.9	0.0	0.0	0.0	17.4	0.0	0.0	0.0
Perm LT Que Serve Time (g_ps), s	22.9	0.0	0.0	0.0	17.4	0.0	0.0	0.0
Time to First Blk (g_f), s	0.0	0.0	0.0	0.0	0.0	0.0	0.0	0.0
Serve Time pre Blk (g_fs), s	0.0	0.0	0.0	0.0	0.0	0.0	0.0	0.0
Proportion LT Inside Lane (P_L)	1.000	0.000	1.000	1.000	1.000	0.000	0.000	0.000
Lane Group Capacity (c), veh/h	235.7	0.0	334.9	307.1	180.2	0.0	0.0	0.0
Volume-to-Capacity Ratio (X)	0.794	0.000	1.020	0.887	0.679	0.000	0.000	0.000
Available Capacity (c_a), veh/h	295.7	0.0	334.9	348.3	193.4	0.0	0.0	0.0
Upstream Filter Factor (I)	1.000	0.000	1.000	1.000	1.000	0.000	0.000	0.000
Uniform Delay (d1), s/veh	26.9	0.0	53.7	53.5	29.0	0.0	0.0	0.0
Incremental Delay (d2), s/veh	11.2	0.0	54.3	21.3	8.5	0.0	0.0	0.0
Initial Queue Delay (d3), s/veh	0.0	0.0	0.0	0.0	0.0	0.0	0.0	0.0
Control Delay (d), s/veh	38.1	0.0	108.0	74.8	37.4	0.0	0.0	0.0
First-Term Queue (Q1), veh/ln	3.2	0.0	11.1	8.9	2.1	0.0	0.0	0.0
Second-Term Queue (Q2), veh/ln	0.7	0.0	5.1	1.8	0.4	0.0	0.0	0.0
Third-Term Queue (Q3), veh/ln	0.0	0.0	0.0	0.0	0.0	0.0	0.0	0.0
Percentile bk-of-que factor (f_B%)	1.000	0.000	1.000	1.000	1.000	0.000	0.000	0.000
Percentile Back of Queue (Q%), veh/ln	3.9	0.0	16.2	10.7	2.5	0.0	0.0	0.0
Percentile Storage Ratio (RQ%)	0.76	0.00	1.44	0.79	0.40	0.00	0.00	0.00
Initial Queue (Qb), veh	0.0	0.0	0.0	0.0	0.0	0.0	0.0	0.0
Final (Residual) Queue (Qe), veh	0.0	0.0	1.7	0.0	0.0	0.0	0.0	0.0
Saturated Delay (ds), s/veh	0.0	0.0	0.0	0.0	0.0	0.0	0.0	0.0
Saturated Queue (Qs), veh	0.0	0.0	0.0	0.0	0.0	0.0	0.0	0.0
Saturated Capacity (cs), veh/h	0.0	0.0	0.0	0.0	0.0	0.0	0.0	0.0
Initial Queue Clear Time (tc), h	0.0	0.0	0.3	0.0	0.0	0.0	0.0	0.0
Middle Lane Group Data								
Assigned Movement	0	2	8	4	0	6	0	0
Lane Assignment		T	T	T		T		
Lanes in Group	0	2	1	1	0	2	0	0
Group Volume (v), veh/h	0.0	1055.8	190.3	216.4	0.0	1234.1	0.0	0.0
Group Sat. Flow (s), veh/h/ln	0.0	1695.1	1862.7	1862.7	0.0	1695.1	0.0	0.0
Queue Serve Time (g_s), s	0.0	34.1	12.2	14.4	0.0	41.7	0.0	0.0
Cycle Queue Clear Time (g_c), s	0.0	34.1	12.2	14.4	0.0	41.7	0.0	0.0
Lane Group Capacity (c), veh/h	0.0	1459.0	351.6	322.4	0.0	1523.1	0.0	0.0
Volume-to-Capacity Ratio (X)	0.000	0.724	0.541	0.671	0.000	0.810	0.000	0.000
Available Capacity (c_a), veh/h	0.0	1459.0	351.6	365.7	0.0	1612.6	0.0	0.0
Upstream Filter Factor (I)	0.000	1.000	1.000	1.000	0.000	1.000	0.000	0.000
Uniform Delay (d1), s/veh	0.0	31.2	48.5	51.2	0.0	31.6	0.0	0.0
Incremental Delay (d2), s/veh	0.0	3.2	1.7	4.0	0.0	3.1	0.0	0.0
Initial Queue Delay (d3), s/veh	0.0	0.0	0.0	0.0	0.0	0.0	0.0	0.0
Control Delay (d), s/veh	0.0	34.4	50.2	55.2	0.0	34.7	0.0	0.0
First-Term Queue (Q1), veh/ln	0.0	13.9	5.7	6.7	0.0	16.9	0.0	0.0
Second-Term Queue (Q2), veh/ln	0.0	0.6	0.2	0.4	0.0	0.7	0.0	0.0
Third-Term Queue (Q3), veh/ln	0.0	0.0	0.0	0.0	0.0	0.0	0.0	0.0
Percentile bk-of-que factor (f_B%)	0.000	1.000	1.000	1.000	0.000	1.000	0.000	0.000
Percentile Back of Queue (Q%), veh/ln	0.0	14.5	5.9	7.1	0.0	17.5	0.0	0.0
Percentile Storage Ratio (RQ%)	0.00	0.81	0.08	0.52	0.00	0.61	0.00	0.00

Initial Queue (Qb), veh	0.0	0.0	0.0	0.0	0.0	0.0	0.0	0.0
Final (Residual) Queue (Qe), veh	0.0	0.0	0.0	0.0	0.0	0.0	0.0	0.0
Saturated Delay (ds), s/veh	0.0	0.0	0.0	0.0	0.0	0.0	0.0	0.0
Saturated Queue (Qs), veh	0.0	0.0	0.0	0.0	0.0	0.0	0.0	0.0
Saturated Capacity (cs), veh/h	0.0	0.0	0.0	0.0	0.0	0.0	0.0	0.0
Initial Queue Clear Time (tc), h	0.0	0.0	0.0	0.0	0.0	0.0	0.0	0.0

Right Lane Group Data								
Assigned Movement	0	12	18	14	0	16	0	0
Lane Assignment		T+R	T+R	T+R		T+R		
Lanes in Group	0	1	1	1	0	1	0	0
Group Volume (v), veh/h	0.0	559.1	188.4	203.8	0.0	642.5	0.0	0.0
Group Sat. Flow (s), veh/h/ln	0.0	1794.7	1833.5	1707.1	0.0	1757.0	0.0	0.0
Queue Serve Time (g_s), s	0.0	34.1	12.3	14.8	0.0	42.1	0.0	0.0
Cycle Queue Clear Time (g_c), s	0.0	34.1	12.3	14.8	0.0	42.1	0.0	0.0
Prot RT Sat Flow Rate (s_R), veh/h/ln	0.0	0.0	0.0	0.0	0.0	0.0	0.0	0.0
Prot RT Eff. Green (g_R), s	0.0	0.0	0.0	0.0	0.0	0.0	0.0	0.0
Proportion RT Outside Lane (P_R)	0.000	0.215	0.090	0.517	0.000	0.341	0.000	0.000
Lane Group Capacity (c), veh/h	0.0	772.4	346.1	295.5	0.0	789.4	0.0	0.0
Volume-to-Capacity Ratio (X)	0.000	0.724	0.544	0.690	0.000	0.814	0.000	0.000
Available Capacity (c_a), veh/h	0.0	772.4	346.1	335.1	0.0	835.7	0.0	0.0
Upstream Filter Factor (I)	0.000	1.000	1.000	1.000	0.000	1.000	0.000	0.000
Uniform Delay (d1), s/veh	0.0	31.2	48.6	51.4	0.0	31.7	0.0	0.0
Incremental Delay (d2), s/veh	0.0	5.8	1.8	5.0	0.0	5.9	0.0	0.0
Initial Queue Delay (d3), s/veh	0.0	0.0	0.0	0.0	0.0	0.0	0.0	0.0
Control Delay (d), s/veh	0.0	37.0	50.3	56.5	0.0	37.6	0.0	0.0
First-Term Queue (Q1), veh/ln	0.0	14.7	5.7	6.4	0.0	17.6	0.0	0.0
Second-Term Queue (Q2), veh/ln	0.0	1.3	0.2	0.4	0.0	1.3	0.0	0.0
Third-Term Queue (Q3), veh/ln	0.0	0.0	0.0	0.0	0.0	0.0	0.0	0.0
Percentile bk-of-que factor (f_B%)	0.000	1.000	1.000	1.000	0.000	1.000	0.000	0.000
Percentile Back of Queue (Q%), veh/ln	0.0	15.9	5.8	6.8	0.0	18.9	0.0	0.0
Percentile Storage Ratio (RQ%)	0.00	0.89	0.08	0.50	0.00	0.66	0.00	0.00
Initial Queue (Qb), veh	0.0	0.0	0.0	0.0	0.0	0.0	0.0	0.0
Final (Residual) Queue (Qe), veh	0.0	0.0	0.0	0.0	0.0	0.0	0.0	0.0
Saturated Delay (ds), s/veh	0.0	0.0	0.0	0.0	0.0	0.0	0.0	0.0
Saturated Queue (Qs), veh	0.0	0.0	0.0	0.0	0.0	0.0	0.0	0.0
Saturated Capacity (cs), veh/h	0.0	0.0	0.0	0.0	0.0	0.0	0.0	0.0
Initial Queue Clear Time (tc), h	0.0	0.0	0.0	0.0	0.0	0.0	0.0	0.0

Intersection Summary	
HCM Average Control Delay	45.2
HCM Level of Service	D

Movement	EBL	EBT	EBR	WBL	WBT	WBR	NEL	NET	NER	SWL	SWT	SWR
Lane Configurations												
Volume (veh/h)	33	5	0	0	4	11	58	1866	19	0	0	0
Sign Control		Stop			Stop			Free			Free	
Grade		0%			0%			0%			0%	
Peak Hour Factor	0.95	0.95	0.95	0.95	0.95	0.95	0.95	0.95	0.95	0.95	0.95	0.95
Hourly flow rate (vph)	41	6	0	0	5	14	71	2298	23	0	0	0
Pedestrians												
Lane Width (ft)												
Walking Speed (ft/s)												
Percent Blockage												
Right turn flare (veh)												
Median type								None			None	
Median storage veh)												
Upstream signal (ft)												
pX, platoon unblocked												
vC, conflicting volume	925	2464	0	2456	2453	778	0			2322		
vC1, stage 1 conf vol												
vC2, stage 2 conf vol												
vCu, unblocked vol	925	2464	0	2456	2453	778	0			2322		
tC, single (s)	7.5	6.5	6.9	7.5	6.5	6.9	4.1			4.1		
tC, 2 stage (s)												
tF (s)	3.5	4.0	3.3	3.5	4.0	3.3	2.2			2.2		
p0 queue free %	78	78	100	100	83	96	96			100		
cM capacity (veh/h)	181	29	1084	13	29	339	1622			211		

Direction, Lane #	EB 1	WB 1	NE 1	NE 2	NE 3
Volume Total	47	18	646	1149	598
Volume Left	41	0	71	0	0
Volume Right	0	14	0	0	23
cSH	106	88	1622	1700	1700
Volume to Capacity	0.44	0.21	0.04	0.68	0.35
Queue Length 95th (ft)	47	18	3	0	0
Control Delay (s)	63.1	56.2	1.2	0.0	0.0
Lane LOS	F	F	A		
Approach Delay (s)	63.1	56.2	0.3		
Approach LOS	F	F			

Intersection Summary			
Average Delay	2.0		
Intersection Capacity Utilization	59.8%	ICU Level of Service	B
Analysis Period (min)	15		

Movement	EBL	EBT	EBR	WBL	WBT	WBR	NEL	NET	NER	SWL	SWT	SWR
Lane Configurations												
Volume (veh/h)	0	4	0	0	4	0	2	2038	4	0	0	0
Sign Control		Stop			Stop			Free			Free	
Grade		0%			0%			0%			0%	
Peak Hour Factor	0.89	0.89	0.89	0.89	0.89	0.89	0.89	0.89	0.89	0.89	0.89	0.89
Hourly flow rate (vph)	0	5	0	0	5	0	3	2679	5	0	0	0
Pedestrians												
Lane Width (ft)												
Walking Speed (ft/s)												
Percent Blockage												
Right turn flare (veh)												
Median type								None			None	
Median storage veh)												
Upstream signal (ft)												
pX, platoon unblocked												
vC, conflicting volume	901	2690	0	2690	2687	896	0			2684		
vC1, stage 1 conf vol												
vC2, stage 2 conf vol												
vCu, unblocked vol	901	2690	0	2690	2687	896	0			2684		
tC, single (s)	7.5	6.5	6.9	7.5	6.5	6.9	4.1			4.1		
tC, 2 stage (s)												
tF (s)	3.5	4.0	3.3	3.5	4.0	3.3	2.2			2.2		
p0 queue free %	100	75	100	100	75	100	100			100		
cM capacity (veh/h)	189	21	1084	8	21	283	1622			151		

Direction, Lane #	EB 1	WB 1	NE 1	NE 2	NE 3
Volume Total	5	5	672	1340	675
Volume Left	0	0	3	0	0
Volume Right	0	0	0	0	5
cSH	21	21	1622	1700	1700
Volume to Capacity	0.25	0.25	0.00	0.79	0.40
Queue Length 95th (ft)	18	18	0	0	0
Control Delay (s)	222.1	221.0	0.0	0.0	0.0
Lane LOS	F	F	A		
Approach Delay (s)	222.1	221.0	0.0		
Approach LOS	F	F			

Intersection Summary			
Average Delay	0.9		
Intersection Capacity Utilization	56.2%	ICU Level of Service	B
Analysis Period (min)	15		

HCM Unsignalized Intersection Capacity Analysis
1: SW 97th Ave. & SW 174th St.

2/11/2015

Movement	EBL	EBT	EBR	WBL	WBT	WBR	NBL	NBT	NBR	SBL	SBT	SBR
Lane Configurations												
Sign Control		Stop			Stop			Stop			Stop	
Volume (vph)	5	124	74	61	134	1	56	9	25	3	2	7
Peak Hour Factor	0.90	0.90	0.90	0.90	0.90	0.90	0.90	0.90	0.90	0.90	0.90	0.90
Hourly flow rate (vph)	6	161	96	79	174	1	73	12	32	4	3	9

Direction, Lane #	EB 1	WB 1	NB 1	SB 1
Volume Total (vph)	264	255	117	16
Volume Left (vph)	7	79	73	4
Volume Right (vph)	96	1	33	9
Hadj (s)	-0.18	0.09	-0.01	-0.27
Departure Headway (s)	4.4	4.6	5.1	5.0
Degree Utilization, x	0.32	0.33	0.17	0.02
Capacity (veh/h)	793	743	643	627
Control Delay (s)	9.4	9.9	9.1	8.1
Approach Delay (s)	9.4	9.9	9.1	8.1
Approach LOS	A	A	A	A

Intersection Summary			
Delay	9.5		
HCM Level of Service	A		
Intersection Capacity Utilization	48.1%	ICU Level of Service	A
Analysis Period (min)	15		

Lane Group	EBL	NBT	SBT	NET
Lane Group Flow (vph)	143	355	85	2618
v/c Ratio	0.81	0.69	0.21	0.88
Control Delay	112.3	38.4	61.3	38.4
Queue Delay	0.0	0.0	0.0	0.0
Total Delay	112.3	38.4	61.3	38.4
Queue Length 50th (ft)	174	197	87	1005
Queue Length 95th (ft)	#265	331	145	1090
Internal Link Dist (ft)	257	1041	665	1300
Turn Bay Length (ft)				
Base Capacity (vph)	208	511	401	2962
Starvation Cap Reductn	0	0	0	0
Spillback Cap Reductn	0	0	0	0
Storage Cap Reductn	0	0	0	0
Reduced v/c Ratio	0.69	0.69	0.21	0.88

Intersection Summary

95th percentile volume exceeds capacity, queue may be longer.
Queue shown is maximum after two cycles.

Movement	EBL	EBR	NBL	NBT	NBR	SBT	SBR	NEL2	NEL	NET	NER
Lane Configurations											
Volume (vph)	4	113	7	15	269	47	23	4	19	2085	40
Ideal Flow (vphpl)	1900	1900	1900	1900	1900	1900	1900	1900	1900	1900	1900
Total Lost time (s)	5.0			5.0		5.0				5.0	
Lane Util. Factor	1.00			1.00		1.00				0.91	
Frt	0.87			0.88		0.96				1.00	
Flt Protected	1.00			1.00		1.00				1.00	
Satd. Flow (prot)	1617			1628		1780				5068	
Flt Permitted	1.00			0.99		1.00				1.00	
Satd. Flow (perm)	1617			1619		1780				5068	
Peak-hour factor, PHF	0.96	0.96	0.96	0.96	0.96	0.96	0.96	0.96	0.96	0.96	0.96
Growth Factor (vph)	117%	117%	117%	117%	117%	117%	117%	117%	117%	117%	117%
Adj. Flow (vph)	5	138	9	18	328	57	28	5	23	2541	49
RTOR Reduction (vph)	0	0	0	146	0	0	0	0	0	1	0
Lane Group Flow (vph)	143	0	0	209	0	85	0	0	0	2617	0
Parking (#/hr)		0									
Turn Type	NA		Perm	NA		NA		Perm	Perm	NA	
Protected Phases	3			4		8				6	
Permitted Phases			4					6	6		
Actuated Green, G (s)	20.4			42.0		42.0				109.0	
Effective Green, g (s)	20.4			42.0		42.0				109.0	
Actuated g/C Ratio	0.11			0.23		0.23				0.58	
Clearance Time (s)	5.0			5.0		5.0				5.0	
Vehicle Extension (s)	3.0			3.0		3.0				3.0	
Lane Grp Cap (vph)	177			365		401				2964	
v/s Ratio Prot	c0.09					0.05					
v/s Ratio Perm				c0.13						0.52	
v/c Ratio	0.81			0.57		0.21				0.88	
Uniform Delay, d1	81.1			64.2		58.7				33.2	
Progression Factor	1.00			1.00		1.00				1.00	
Incremental Delay, d2	23.0			6.4		1.2				4.2	
Delay (s)	104.1			70.6		59.9				37.5	
Level of Service	F			E		E				D	
Approach Delay (s)	104.1			70.6		59.9				37.5	
Approach LOS	F			E		E				D	

Intersection Summary			
HCM Average Control Delay	44.7	HCM Level of Service	D
HCM Volume to Capacity ratio	0.80		
Actuated Cycle Length (s)	186.4	Sum of lost time (s)	15.0
Intersection Capacity Utilization	97.2%	ICU Level of Service	F
Analysis Period (min)	15		
c Critical Lane Group			

Movement	EBL	EBR	NBL	NBT	SBT	SBR
Lane Configurations						
Volume (veh/h)	5	74	19	269	203	9
Sign Control	Stop			Free	Free	
Grade	0%			0%	0%	
Peak Hour Factor	0.92	0.92	0.92	0.92	0.92	0.92
Hourly flow rate (vph)	6	94	24	342	258	11
Pedestrians						
Lane Width (ft)						
Walking Speed (ft/s)						
Percent Blockage						
Right turn flare (veh)						
Median type				None	None	
Median storage veh)						
Upstream signal (ft)					1121	
pX, platoon unblocked						
vC, conflicting volume	654	264	270			
vC1, stage 1 conf vol						
vC2, stage 2 conf vol						
vCu, unblocked vol	654	264	270			
tC, single (s)	6.4	6.2	4.1			
tC, 2 stage (s)						
tF (s)	3.5	3.3	2.2			
p0 queue free %	98	88	98			
cM capacity (veh/h)	423	775	1294			

Direction, Lane #	EB 1	NB 1	SB 1
Volume Total	100	366	270
Volume Left	6	24	0
Volume Right	94	0	11
cSH	736	1294	1700
Volume to Capacity	0.14	0.02	0.16
Queue Length 95th (ft)	12	1	0
Control Delay (s)	10.7	0.7	0.0
Lane LOS	B	A	
Approach Delay (s)	10.7	0.7	0.0
Approach LOS	B		

Intersection Summary			
Average Delay	1.8		
Intersection Capacity Utilization	46.6%	ICU Level of Service	A
Analysis Period (min)	15		

Movement	WBL	WBR	NBT	NBR	SBL	SBT
Lane Configurations						
Volume (veh/h)	49	47	261	36	26	240
Sign Control	Stop		Free			Free
Grade	0%		0%			0%
Peak Hour Factor	0.94	0.94	0.94	0.94	0.94	0.94
Hourly flow rate (vph)	61	58	325	45	32	299
Pedestrians						
Lane Width (ft)						
Walking Speed (ft/s)						
Percent Blockage						
Right turn flare (veh)						
Median type			None			None
Median storage veh)						
Upstream signal (ft)						
pX, platoon unblocked						
vC, conflicting volume	711	347			370	
vC1, stage 1 conf vol						
vC2, stage 2 conf vol						
vCu, unblocked vol	711	347			370	
tC, single (s)	6.4	6.2			4.1	
tC, 2 stage (s)						
tF (s)	3.5	3.3			2.2	
p0 queue free %	84	92			97	
cM capacity (veh/h)	389	696			1189	

Direction, Lane #	WB 1	NB 1	SB 1
Volume Total	119	370	331
Volume Left	61	0	32
Volume Right	58	45	0
cSH	496	1700	1189
Volume to Capacity	0.24	0.22	0.03
Queue Length 95th (ft)	23	0	2
Control Delay (s)	14.5	0.0	1.0
Lane LOS	B		A
Approach Delay (s)	14.5	0.0	1.0
Approach LOS	B		

Intersection Summary			
Average Delay	2.5		
Intersection Capacity Utilization	51.6%	ICU Level of Service	A
Analysis Period (min)	15		

Movement	EBL	EBR	NBL	NBT	SBT	SBR
Lane Configurations						
Volume (veh/h)	5	46	14	312	295	4
Sign Control	Stop			Free	Free	
Grade	0%			0%	0%	
Peak Hour Factor	0.93	0.93	0.93	0.93	0.93	0.93
Hourly flow rate (vph)	6	58	18	393	371	5
Pedestrians						
Lane Width (ft)						
Walking Speed (ft/s)						
Percent Blockage						
Right turn flare (veh)						
Median type				None	None	
Median storage veh)						
Upstream signal (ft)				1230		
pX, platoon unblocked	0.86					
vC, conflicting volume	801	374	376			
vC1, stage 1 conf vol						
vC2, stage 2 conf vol						
vCu, unblocked vol	687	374	376			
tC, single (s)	6.4	6.2	4.1			
tC, 2 stage (s)						
tF (s)	3.5	3.3	2.2			
p0 queue free %	98	91	99			
cM capacity (veh/h)	349	673	1182			

Direction, Lane #	EB 1	NB 1	SB 1
Volume Total	64	410	376
Volume Left	6	18	0
Volume Right	58	0	5
cSH	617	1182	1700
Volume to Capacity	0.10	0.01	0.22
Queue Length 95th (ft)	9	1	0
Control Delay (s)	11.5	0.5	0.0
Lane LOS	B	A	
Approach Delay (s)	11.5	0.5	0.0
Approach LOS	B		

Intersection Summary			
Average Delay	1.1		
Intersection Capacity Utilization	42.8%	ICU Level of Service	A
Analysis Period (min)	15		

Movement	EBL	EBT	EBR	WBL	WBT	WBR	NBL	NBT	NBR	SBL	SBT	SBR
Lane Configurations												
Volume (veh/h)	5	4	26	7	1	12	4	329	2	4	355	7
Sign Control		Stop			Stop			Free			Free	
Grade		0%			0%			0%			0%	
Peak Hour Factor	0.87	0.87	0.87	0.87	0.87	0.87	0.87	0.87	0.87	0.87	0.87	0.87
Hourly flow rate (vph)	7	5	35	9	1	16	5	442	3	5	477	9
Pedestrians												
Lane Width (ft)												
Walking Speed (ft/s)												
Percent Blockage												
Right turn flare (veh)												
Median type								None			None	
Median storage veh)												
Upstream signal (ft)								904				
pX, platoon unblocked	0.84	0.84		0.84	0.84	0.84				0.84		
vC, conflicting volume	964	949	482	985	952	444	487			445		
vC1, stage 1 conf vol												
vC2, stage 2 conf vol												
vCu, unblocked vol	863	844	482	888	848	244	487			246		
tC, single (s)	7.1	6.5	6.2	7.1	6.5	6.2	4.1			4.1		
tC, 2 stage (s)												
tF (s)	3.5	4.0	3.3	3.5	4.0	3.3	2.2			2.2		
p0 queue free %	97	98	94	95	99	98	100			100		
cM capacity (veh/h)	223	250	584	204	248	668	1076			1110		

Direction, Lane #	EB 1	WB 1	NB 1	SB 1
Volume Total	47	27	451	492
Volume Left	7	9	5	5
Volume Right	35	16	3	9
cSH	422	355	1076	1110
Volume to Capacity	0.11	0.08	0.00	0.00
Queue Length 95th (ft)	9	6	0	0
Control Delay (s)	14.6	16.0	0.2	0.1
Lane LOS	B	C	A	A
Approach Delay (s)	14.6	16.0	0.2	0.1
Approach LOS	B	C		

Intersection Summary			
Average Delay	1.2		
Intersection Capacity Utilization	35.1%	ICU Level of Service	A
Analysis Period (min)	15		

Movement	EBL	EBT	EBR	WBL	WBT	WBR	NBL	NBT	NBR	SBL	SBT	SBR
Lane Configurations												
Volume (veh/h)	1	0	2	0	0	0	1	346	0	2	399	2
Sign Control		Stop			Stop			Free			Free	
Grade		0%			0%			0%			0%	
Peak Hour Factor	0.91	0.91	0.91	0.91	0.91	0.91	0.91	0.91	0.91	0.91	0.91	0.91
Hourly flow rate (vph)	1	0	3	0	0	0	1	445	0	3	513	3
Pedestrians												
Lane Width (ft)												
Walking Speed (ft/s)												
Percent Blockage												
Right turn flare (veh)												
Median type								None			None	
Median storage veh)												
Upstream signal (ft)								601				
pX, platoon unblocked	0.85	0.85		0.85	0.85	0.85				0.85		
vC, conflicting volume	967	967	514	969	968	445	516			445		
vC1, stage 1 conf vol												
vC2, stage 2 conf vol												
vCu, unblocked vol	871	871	514	874	873	255	516			255		
tC, single (s)	7.1	6.5	6.2	7.1	6.5	6.2	4.1			4.1		
tC, 2 stage (s)												
tF (s)	3.5	4.0	3.3	3.5	4.0	3.3	2.2			2.2		
p0 queue free %	99	100	100	100	100	100	100			100		
cM capacity (veh/h)	229	244	560	227	244	664	1050			1110		

Direction, Lane #	EB 1	WB 1	NB 1	SB 1
Volume Total	4	0	446	518
Volume Left	1	0	1	3
Volume Right	3	0	0	3
cSH	378	1700	1050	1110
Volume to Capacity	0.01	0.00	0.00	0.00
Queue Length 95th (ft)	1	0	0	0
Control Delay (s)	14.6	0.0	0.0	0.1
Lane LOS	B	A	A	A
Approach Delay (s)	14.6	0.0	0.0	0.1
Approach LOS	B	A		

Intersection Summary			
Average Delay	0.1		
Intersection Capacity Utilization	36.4%	ICU Level of Service	A
Analysis Period (min)	15		

Movement	EBL	EBT	EBR	WBL	WBT	WBR	NBL	NBT	NBR	SBL	SBT	SBR
Lane Configurations												
Volume (veh/h)	7	1	61	2	2	2	9	337	1	3	393	1
Sign Control		Stop			Stop			Free			Free	
Grade		0%			0%			0%			0%	
Peak Hour Factor	0.93	0.93	0.93	0.93	0.93	0.93	0.93	0.93	0.93	0.93	0.93	0.93
Hourly flow rate (vph)	9	1	77	3	3	3	11	424	1	4	494	1
Pedestrians												
Lane Width (ft)												
Walking Speed (ft/s)												
Percent Blockage												
Right turn flare (veh)												
Median type								None			None	
Median storage veh)												
Upstream signal (ft)								300				
pX, platoon unblocked	0.85	0.85		0.85	0.85	0.85				0.85		
vC, conflicting volume	954	950	495	1027	950	425	496			425		
vC1, stage 1 conf vol												
vC2, stage 2 conf vol												
vCu, unblocked vol	860	857	495	947	857	241	496			242		
tC, single (s)	7.1	6.5	6.2	7.1	6.5	6.2	4.1			4.1		
tC, 2 stage (s)												
tF (s)	3.5	4.0	3.3	3.5	4.0	3.3	2.2			2.2		
p0 queue free %	96	99	87	99	99	100	99			100		
cM capacity (veh/h)	231	248	574	176	248	682	1068			1132		

Direction, Lane #	EB 1	WB 1	NB 1	SB 1
Volume Total	87	8	437	499
Volume Left	9	3	11	4
Volume Right	77	3	1	1
cSH	491	268	1068	1132
Volume to Capacity	0.18	0.03	0.01	0.00
Queue Length 95th (ft)	16	2	1	0
Control Delay (s)	13.9	18.8	0.3	0.1
Lane LOS	B	C	A	A
Approach Delay (s)	13.9	18.8	0.3	0.1
Approach LOS	B	C		

Intersection Summary			
Average Delay	1.5		
Intersection Capacity Utilization	39.6%	ICU Level of Service	A
Analysis Period (min)	15		

Lane Group	EBL	EBT	EBR	WBL	WBT	NBL	NBT	SBL	SBT
Lane Group Flow (vph)	45	554	203	233	662	172	474	41	573
v/c Ratio	0.09	0.83	0.35	0.59	0.48	0.51	0.60	0.11	0.72
Control Delay	16.6	55.1	18.4	24.2	36.8	38.4	54.2	32.5	60.6
Queue Delay	0.0	0.0	0.0	0.0	0.0	0.0	0.0	0.0	0.0
Total Delay	16.6	55.1	18.4	24.2	36.8	38.4	54.2	32.5	60.6
Queue Length 50th (ft)	20	451	61	118	270	114	200	25	279
Queue Length 95th (ft)	42	642	139	176	357	199	296	59	397
Internal Link Dist (ft)		1915			422		229		156
Turn Bay Length (ft)	130			95		155		130	
Base Capacity (vph)	534	850	726	437	1710	343	874	436	880
Starvation Cap Reductn	0	0	0	0	0	0	0	0	0
Spillback Cap Reductn	0	0	0	0	0	0	0	0	0
Storage Cap Reductn	0	0	0	0	0	0	0	0	0
Reduced v/c Ratio	0.08	0.65	0.28	0.53	0.39	0.50	0.54	0.09	0.65

Intersection Summary

Movement	EBL	EBT	EBR	WBL	WBT	WBR	NBL	NBT	NBR	SBL	SBT	SBR
Lane Configurations												
Volume (vph)	35	436	160	183	510	10	135	283	90	32	409	42
Ideal Flow (vphpl)	1900	1900	1900	1900	1900	1900	1900	1900	1900	1900	1900	1900
Total Lost time (s)	3.0	3.0	5.0	3.0	3.0		3.0	3.0		3.0	3.0	
Lane Util. Factor	1.00	1.00	1.00	1.00	0.95		1.00	0.95		1.00	0.95	
Frt	1.00	1.00	0.85	1.00	1.00		1.00	0.96		1.00	0.99	
Flt Protected	0.95	1.00	1.00	0.95	1.00		0.95	1.00		0.95	1.00	
Satd. Flow (prot)	1770	1863	1583	1770	3529		1770	3412		1770	3490	
Flt Permitted	0.30	1.00	1.00	0.21	1.00		0.20	1.00		0.46	1.00	
Satd. Flow (perm)	566	1863	1583	396	3529		371	3412		856	3490	
Peak-hour factor, PHF	0.92	0.92	0.92	0.92	0.92	0.92	0.92	0.92	0.92	0.92	0.92	0.92
Growth Factor (vph)	117%	117%	117%	117%	117%	117%	117%	117%	117%	117%	117%	117%
Adj. Flow (vph)	45	554	203	233	649	13	172	360	114	41	520	53
RTOR Reduction (vph)	0	0	83	0	1	0	0	17	0	0	4	0
Lane Group Flow (vph)	45	554	120	233	661	0	172	457	0	41	569	0
Turn Type	pm+pt	NA	custom	pm+pt	NA		custom	NA		custom	NA	
Protected Phases	1 2	2 4		1 3	3 4		5 6	6 8		5 7	7 8	
Permitted Phases	2 4		4	3 4			8			8		
Actuated Green, G (s)	69.8	51.0	46.8	67.8	55.0		47.9	30.5		43.4	32.0	
Effective Green, g (s)	69.8	51.0	46.8	67.8	55.0		47.9	30.5		43.4	32.0	
Actuated g/C Ratio	0.47	0.34	0.31	0.46	0.37		0.32	0.21		0.29	0.22	
Clearance Time (s)			5.0									
Vehicle Extension (s)			3.0									
Lane Grp Cap (vph)	452	639	499	375	1306		332	700		361	752	
v/s Ratio Prot	0.02	c0.30		c0.09	0.19		c0.08	0.13		0.01	c0.16	
v/s Ratio Perm	0.03		0.08	0.20			0.09			0.02		
v/c Ratio	0.10	0.87	0.24	0.62	0.51		0.52	0.65		0.11	0.76	
Uniform Delay, d1	21.9	45.6	37.7	28.2	36.3		38.6	54.2		38.1	54.7	
Progression Factor	1.00	1.00	1.00	1.00	1.00		1.00	1.00		1.00	1.00	
Incremental Delay, d2	0.1	11.9	0.3	3.2	0.3		1.4	2.2		0.1	4.4	
Delay (s)	22.0	57.5	38.0	31.4	36.6		40.0	56.4		38.3	59.0	
Level of Service	C	E	D	C	D		D	E		D	E	
Approach Delay (s)		50.6			35.2			52.0			57.6	
Approach LOS		D			D			D			E	

Intersection Summary			
HCM Average Control Delay	47.7	HCM Level of Service	D
HCM Volume to Capacity ratio	0.71		
Actuated Cycle Length (s)	148.6	Sum of lost time (s)	18.0
Intersection Capacity Utilization	75.6%	ICU Level of Service	D
Analysis Period (min)	15		

c Critical Lane Group

Movement	EBL	EBT	WBT	WBR	SBL	SBR
Lane Configurations						
Volume (veh/h)	4	582	718	9	5	1
Sign Control		Free	Free		Stop	
Grade		0%	0%		0%	
Peak Hour Factor	0.96	0.96	0.96	0.96	0.96	0.96
Hourly flow rate (vph)	5	709	875	11	6	1
Pedestrians						
Lane Width (ft)						
Walking Speed (ft/s)						
Percent Blockage						
Right turn flare (veh)						
Median type		None	None			
Median storage veh)						
Upstream signal (ft)		502				
pX, platoon unblocked					0.71	
vC, conflicting volume	886				1600	881
vC1, stage 1 conf vol						
vC2, stage 2 conf vol						
vCu, unblocked vol	886				1640	881
tC, single (s)	4.1				6.4	6.2
tC, 2 stage (s)						
tF (s)	2.2				3.5	3.3
p0 queue free %	99				92	100
cM capacity (veh/h)	764				78	346

Direction, Lane #	EB 1	EB 2	WB 1	SB 1
Volume Total	5	709	886	7
Volume Left	5	0	0	6
Volume Right	0	0	11	1
cSH	764	1700	1700	90
Volume to Capacity	0.01	0.42	0.52	0.08
Queue Length 95th (ft)	0	0	0	6
Control Delay (s)	9.7	0.0	0.0	48.6
Lane LOS	A			E
Approach Delay (s)	0.1		0.0	48.6
Approach LOS				E

Intersection Summary			
Average Delay	0.3		
Intersection Capacity Utilization	54.9%	ICU Level of Service	A
Analysis Period (min)	15		

Lane Group	EBL	EBT	WBL	WBT	NBL	NBT	SBL	SBT
Lane Group Flow (vph)	237	579	257	529	93	1919	244	2584
v/c Ratio	0.79	0.97	0.94	0.93	0.89	0.88	0.91	0.97
Control Delay	94.6	107.1	116.4	100.7	100.0	53.7	94.6	55.2
Queue Delay	0.0	0.0	0.0	0.0	0.0	0.0	0.0	0.0
Total Delay	94.6	107.1	116.4	100.7	100.0	53.7	94.6	55.2
Queue Length 50th (ft)	289	381	352	361	67	804	250	1134
Queue Length 95th (ft)	#421	#515	#553	#475	#193	869	#411	#1213
Internal Link Dist (ft)		364		1915		469		768
Turn Bay Length (ft)			286		160		130	
Base Capacity (vph)	299	594	281	583	105	2183	283	2651
Starvation Cap Reductn	0	0	0	0	0	0	0	0
Spillback Cap Reductn	0	0	0	0	0	0	0	0
Storage Cap Reductn	0	0	0	0	0	0	0	0
Reduced v/c Ratio	0.79	0.97	0.91	0.91	0.89	0.88	0.86	0.97

Intersection Summary

95th percentile volume exceeds capacity, queue may be longer.
Queue shown is maximum after two cycles.

Movement	EBL	EBT	EBR	WBL	WBT	WBR	NBL	NBT	NBR	SBL	SBT	SBR
Lane Configurations												
Volume (vph)	186	405	50	306	301	11	73	1202	307	192	1801	231
Ideal Flow (vphpl)	1900	1900	1900	1900	1900	1900	1900	1900	1900	1900	1900	1900
Total Lost time (s)	5.0	5.0		5.0	5.0		3.0	5.0		3.0	5.0	
Lane Util. Factor	1.00	0.95		0.91	0.91		1.00	0.91		1.00	0.91	
Frt	1.00	0.98		1.00	1.00		1.00	0.97		1.00	0.98	
Flt Protected	0.95	1.00		0.95	0.99		0.95	1.00		0.95	1.00	
Satd. Flow (prot)	1770	3481		1610	3335		1770	4930		1770	4999	
Flt Permitted	0.95	1.00		0.95	0.99		0.05	1.00		0.05	1.00	
Satd. Flow (perm)	1770	3481		1610	3335		90	4930		87	4999	
Peak-hour factor, PHF	0.92	0.92	0.92	0.92	0.92	0.92	0.92	0.92	0.92	0.92	0.92	0.92
Growth Factor (vph)	117%	117%	117%	117%	117%	117%	117%	117%	117%	117%	117%	117%
Adj. Flow (vph)	237	515	64	389	383	14	93	1529	390	244	2290	294
RTOR Reduction (vph)	0	5	0	0	1	0	0	23	0	0	8	0
Lane Group Flow (vph)	237	574	0	257	528	0	93	1896	0	244	2576	0
Turn Type	Split	NA		Split	NA		pm+pt	NA		pm+pt	NA	
Protected Phases	4	4		8	8		5	2		1	6	
Permitted Phases							2			6		
Actuated Green, G (s)	32.0	32.0		32.2	32.2		89.8	82.8		110.0	100.0	
Effective Green, g (s)	32.0	32.0		32.2	32.2		89.8	82.8		110.0	100.0	
Actuated g/C Ratio	0.17	0.17		0.17	0.17		0.47	0.44		0.58	0.53	
Clearance Time (s)	5.0	5.0		5.0	5.0		3.0	5.0		3.0	5.0	
Vehicle Extension (s)	3.0	3.0		3.0	3.0		3.0	3.0		3.0	3.0	
Lane Grp Cap (vph)	299	589		274	568		105	2158		266	2642	
v/s Ratio Prot	0.13	c0.16		c0.16	0.16		0.03	0.38		c0.12	c0.52	
v/s Ratio Perm							0.39			0.42		
v/c Ratio	0.79	0.97		0.94	0.93		0.89	0.88		0.92	0.97	
Uniform Delay, d1	75.4	78.2		77.5	77.4		45.9	48.6		65.2	43.4	
Progression Factor	1.00	1.00		1.00	1.00		1.00	1.00		1.00	1.00	
Incremental Delay, d2	13.4	30.5		37.6	21.7		52.9	5.5		33.7	12.1	
Delay (s)	88.8	108.6		115.1	99.1		98.8	54.1		98.9	55.5	
Level of Service	F	F		F	F		F	D		F	E	
Approach Delay (s)		102.9			104.3			56.2			59.3	
Approach LOS		F			F			E			E	

Intersection Summary			
HCM Average Control Delay	69.3	HCM Level of Service	E
HCM Volume to Capacity ratio	0.95		
Actuated Cycle Length (s)	189.2	Sum of lost time (s)	13.0
Intersection Capacity Utilization	96.0%	ICU Level of Service	F
Analysis Period (min)	15		

c Critical Lane Group

Movement	EBL	EBT	EBR	WBL	WBT	WBR	NBL	NBT	NBR	SBL	SBT	SBR
Lane Configurations												
Volume (vph)	186	405	50	306	301	11	73	1202	307	192	1801	231
Movement Number	7	4	14	3	8	18	5	2	12	1	6	16
Initial Queue, veh	0	0	0	0	0	0	0	0	0	0	0	0
Ped-Bike Adj. Factor (A_pbT)	1.00		1.00	1.00		1.00	1.00		1.00	1.00		1.00
Parking, Bus Adj. Factors	1.00	1.00	1.00	1.00	1.00	1.00	1.00	1.00	1.00	1.00	1.00	1.00
Adj. Sat. Flow Rate, veh/h/ln	1863	1863	1863	1863	1863	1863	1863	1863	1863	1863	1863	1863
Lanes	1	2	0	1	2	0	1	3	0	1	3	0
Lane Assignment												
Capacity, veh/h	272	499	61	338	680	25	127	1956	499	235	2371	301
Proportion Arriving On Green	0.15	0.15	0.15	0.19	0.19	0.19	0.03	0.48	0.48	0.07	0.52	0.52
Movement Delay, s/veh	77.3	91.1	93.1	114.5	63.5	63.5	44.3	36.2	38.4	47.2	37.7	41.0
Movement LOS	E	F	F	F	E	E	D	D	D	D	D	D
Approach Volume, veh/h		697			672			1720			2417	
Approach Delay, s/veh		87.8			88.8			37.3			39.6	
Approach LOS		F			F			D			D	

Timer:	1	2	3	4	5	6	7	8
Assigned Phase	1	2	8	4	5	6		
Case No	1.1	4.0	10.0	10.0	1.1	4.0		
Phase Duration (G+Y+Rc), s	14.82	88.88	38.00	31.57	8.80	94.90		
Change Period (Y+Rc), s	3.00	5.00	5.00	5.00	3.00	5.00		
Max. Allowable Headway (MAH), s	4.00	3.96	3.96	3.96	4.00	3.96		
Maximum Green Setting (Gmax), s	26.00	81.00	33.00	32.00	7.00	100.00		
Max. Queue Clearance Time (g_c+I1), s	11.27	44.80	34.37	25.08	5.91	65.65		
Green Extension Time (g_e), s	0.54	27.36	0.00	1.49	0.02	24.25		
Probability of Phase Call (p_c)	1.000	1.000	1.000	1.000	0.978	1.000		
Probability of Max Out (p_x)	0.000	0.707	1.000	0.392	1.000	0.721		

Left-Turn Movement Data					
Assigned Movement	1		3	7	5
Mvmt. Sat Flow, veh/h	1774.04		1774.04	1774.04	1774.04

Through Movement Data					
Assigned Movement		2	8	4	6
Mvmt. Sat Flow, veh/h		4040.41	3572.32	3255.17	4570.65

Right-Turn Movement Data					
Assigned Movement		12	18	14	16
Mvmt. Sat Flow, veh/h		1030.65	130.19	399.77	579.95

Left Lane Group Data								
Assigned Movement	1	0	3	7	5	0	0	0
Lane Assignment	L (Pr/Pm)		L	LL (Pr/Pm)				
Lanes in Group	1	0	1	1	1	0	0	0
Group Volume (v), veh/h	208.7	0.0	332.6	202.2	79.3	0.0	0.0	0.0
Group Sat. Flow (s), veh/h/ln	1774.0	0.0	1774.0	1774.0	1774.0	0.0	0.0	0.0
Queue Serve Time (g_s), s	9.3	0.0	32.4	18.9	3.9	0.0	0.0	0.0
Cycle Queue Clear Time (g_c), s	9.3	0.0	32.4	18.9	3.9	0.0	0.0	0.0

Perm LT Sat Flow Rate (s_l), veh/h/ln	304.4	0.0	1774.0	1774.0	174.6	0.0	0.0	0.0
Shared LT Sat Flow (s_sh), veh/h/ln	0.0	0.0	0.0	0.0	0.0	0.0	0.0	0.0
Perm LT Eff. Green (g_p), s	91.9	0.0	0.0	0.0	83.9	0.0	0.0	0.0
Perm LT Serve Time (g_u), s	41.1	0.0	0.0	0.0	26.2	0.0	0.0	0.0
Perm LT Que Serve Time (g_ps), s	41.1	0.0	0.0	0.0	26.2	0.0	0.0	0.0
Time to First Blk (g_f), s	0.0	0.0	0.0	0.0	0.0	0.0	0.0	0.0
Serve Time pre Blk (g_fs), s	0.0	0.0	0.0	0.0	0.0	0.0	0.0	0.0
Proportion LT Inside Lane (P_L)	1.000	0.000	1.000	1.000	1.000	0.000	0.000	0.000
Lane Group Capacity (c), veh/h	234.7	0.0	337.9	272.1	127.4	0.0	0.0	0.0
Volume-to-Capacity Ratio (X)	0.889	0.000	0.984	0.743	0.623	0.000	0.000	0.000
Available Capacity (c_a), veh/h	379.9	0.0	337.9	327.6	139.7	0.0	0.0	0.0
Upstream Filter Factor (I)	1.000	0.000	1.000	1.000	1.000	0.000	0.000	0.000
Uniform Delay (d1), s/veh	33.1	0.0	69.9	70.1	37.0	0.0	0.0	0.0
Incremental Delay (d2), s/veh	14.1	0.0	44.6	7.2	7.2	0.0	0.0	0.0
Initial Queue Delay (d3), s/veh	0.0	0.0	0.0	0.0	0.0	0.0	0.0	0.0
Control Delay (d), s/veh	47.2	0.0	114.5	77.3	44.3	0.0	0.0	0.0
First-Term Queue (Q1), veh/ln	5.3	0.0	14.8	8.6	1.8	0.0	0.0	0.0
Second-Term Queue (Q2), veh/ln	0.9	0.0	4.2	0.5	0.3	0.0	0.0	0.0
Third-Term Queue (Q3), veh/ln	0.0	0.0	0.0	0.0	0.0	0.0	0.0	0.0
Percentile bk-of-que factor (f_B%)	1.000	0.000	1.000	1.000	1.000	0.000	0.000	0.000
Percentile Back of Queue (Q%), veh/ln	6.2	0.0	19.0	9.2	2.1	0.0	0.0	0.0
Percentile Storage Ratio (RQ%)	1.22	0.00	1.68	0.68	0.33	0.00	0.00	0.00
Initial Queue (Qb), veh	0.0	0.0	0.0	0.0	0.0	0.0	0.0	0.0
Final (Residual) Queue (Qe), veh	0.0	0.0	0.0	0.0	0.0	0.0	0.0	0.0
Saturated Delay (ds), s/veh	0.0	0.0	0.0	0.0	0.0	0.0	0.0	0.0
Saturated Queue (Qs), veh	0.0	0.0	0.0	0.0	0.0	0.0	0.0	0.0
Saturated Capacity (cs), veh/h	0.0	0.0	0.0	0.0	0.0	0.0	0.0	0.0
Initial Queue Clear Time (tc), h	0.0	0.0	0.0	0.0	0.0	0.0	0.0	0.0
Middle Lane Group Data								
Assigned Movement	0	2	8	4	0	6	0	0
Lane Assignment		T	T	T		T		
Lanes in Group	0	2	1	1	0	2	0	0
Group Volume (v), veh/h	0.0	1096.0	170.2	250.9	0.0	1446.5	0.0	0.0
Group Sat. Flow (s), veh/h/ln	0.0	1695.1	1862.7	1862.7	0.0	1695.1	0.0	0.0
Queue Serve Time (g_s), s	0.0	42.7	14.1	22.8	0.0	62.0	0.0	0.0
Cycle Queue Clear Time (g_c), s	0.0	42.7	14.1	22.8	0.0	62.0	0.0	0.0
Lane Group Capacity (c), veh/h	0.0	1641.2	354.8	285.7	0.0	1759.0	0.0	0.0
Volume-to-Capacity Ratio (X)	0.000	0.668	0.480	0.878	0.000	0.822	0.000	0.000
Available Capacity (c_a), veh/h	0.0	1641.2	354.8	344.0	0.0	1956.6	0.0	0.0
Upstream Filter Factor (I)	0.000	1.000	1.000	1.000	0.000	1.000	0.000	0.000
Uniform Delay (d1), s/veh	0.0	34.1	62.5	71.8	0.0	35.0	0.0	0.0
Incremental Delay (d2), s/veh	0.0	2.2	1.0	19.4	0.0	2.7	0.0	0.0
Initial Queue Delay (d3), s/veh	0.0	0.0	0.0	0.0	0.0	0.0	0.0	0.0
Control Delay (d), s/veh	0.0	36.2	63.5	91.1	0.0	37.7	0.0	0.0
First-Term Queue (Q1), veh/ln	0.0	17.8	6.8	11.0	0.0	25.6	0.0	0.0
Second-Term Queue (Q2), veh/ln	0.0	0.5	0.1	1.5	0.0	0.7	0.0	0.0
Third-Term Queue (Q3), veh/ln	0.0	0.0	0.0	0.0	0.0	0.0	0.0	0.0
Percentile bk-of-que factor (f_B%)	0.000	1.000	1.000	1.000	0.000	1.000	0.000	0.000
Percentile Back of Queue (Q%), veh/ln	0.0	18.3	6.9	12.5	0.0	26.2	0.0	0.0
Percentile Storage Ratio (RQ%)	0.00	1.02	0.09	0.92	0.00	0.91	0.00	0.00

Initial Queue (Qb), veh	0.0	0.0	0.0	0.0	0.0	0.0	0.0	0.0
Final (Residual) Queue (Qe), veh	0.0	0.0	0.0	0.0	0.0	0.0	0.0	0.0
Saturated Delay (ds), s/veh	0.0	0.0	0.0	0.0	0.0	0.0	0.0	0.0
Saturated Queue (Qs), veh	0.0	0.0	0.0	0.0	0.0	0.0	0.0	0.0
Saturated Capacity (cs), veh/h	0.0	0.0	0.0	0.0	0.0	0.0	0.0	0.0
Initial Queue Clear Time (tc), h	0.0	0.0	0.0	0.0	0.0	0.0	0.0	0.0

Right Lane Group Data								
Assigned Movement	0	12	18	14	0	16	0	0
Lane Assignment		T+R	T+R	T+R		T+R		
Lanes in Group	0	1	1	1	0	1	0	0
Group Volume (v), veh/h	0.0	544.2	169.0	243.6	0.0	762.2	0.0	0.0
Group Sat. Flow (s), veh/h/ln	0.0	1680.9	1839.8	1792.2	0.0	1760.4	0.0	0.0
Queue Serve Time (g_s), s	0.0	42.8	14.2	23.1	0.0	63.7	0.0	0.0
Cycle Queue Clear Time (g_c), s	0.0	42.8	14.2	23.1	0.0	63.7	0.0	0.0
Prot RT Sat Flow Rate (s_R), veh/h/ln	0.0	0.0	0.0	0.0	0.0	0.0	0.0	0.0
Prot RT Eff. Green (g_R), s	0.0	0.0	0.0	0.0	0.0	0.0	0.0	0.0
Proportion RT Outside Lane (P_R)	0.000	0.613	0.071	0.223	0.000	0.329	0.000	0.000
Lane Group Capacity (c), veh/h	0.0	813.7	350.4	274.8	0.0	913.4	0.0	0.0
Volume-to-Capacity Ratio (X)	0.000	0.669	0.482	0.887	0.000	0.834	0.000	0.000
Available Capacity (c_a), veh/h	0.0	813.7	350.4	331.0	0.0	1016.0	0.0	0.0
Upstream Filter Factor (I)	0.000	1.000	1.000	1.000	0.000	1.000	0.000	0.000
Uniform Delay (d1), s/veh	0.0	34.1	62.5	71.9	0.0	35.4	0.0	0.0
Incremental Delay (d2), s/veh	0.0	4.3	1.0	21.2	0.0	5.6	0.0	0.0
Initial Queue Delay (d3), s/veh	0.0	0.0	0.0	0.0	0.0	0.0	0.0	0.0
Control Delay (d), s/veh	0.0	38.4	63.5	93.1	0.0	41.0	0.0	0.0
First-Term Queue (Q1), veh/ln	0.0	17.7	6.7	10.7	0.0	27.3	0.0	0.0
Second-Term Queue (Q2), veh/ln	0.0	1.0	0.1	1.6	0.0	1.4	0.0	0.0
Third-Term Queue (Q3), veh/ln	0.0	0.0	0.0	0.0	0.0	0.0	0.0	0.0
Percentile bk-of-que factor (f_B%)	0.000	1.000	1.000	1.000	0.000	1.000	0.000	0.000
Percentile Back of Queue (Q%), veh/ln	0.0	18.6	6.8	12.3	0.0	28.7	0.0	0.0
Percentile Storage Ratio (RQ%)	0.00	1.04	0.09	0.91	0.00	0.99	0.00	0.00
Initial Queue (Qb), veh	0.0	0.0	0.0	0.0	0.0	0.0	0.0	0.0
Final (Residual) Queue (Qe), veh	0.0	0.0	0.0	0.0	0.0	0.0	0.0	0.0
Saturated Delay (ds), s/veh	0.0	0.0	0.0	0.0	0.0	0.0	0.0	0.0
Saturated Queue (Qs), veh	0.0	0.0	0.0	0.0	0.0	0.0	0.0	0.0
Saturated Capacity (cs), veh/h	0.0	0.0	0.0	0.0	0.0	0.0	0.0	0.0
Initial Queue Clear Time (tc), h	0.0	0.0	0.0	0.0	0.0	0.0	0.0	0.0

Intersection Summary	
HCM Average Control Delay	51.0
HCM Level of Service	D

Movement	EBL	EBT	EBR	WBL	WBT	WBR	NEL	NET	NER	SWL	SWT	SWR
Lane Configurations												
Volume (veh/h)	27	21	0	0	8	14	36	1689	18	0	0	0
Sign Control		Stop			Stop			Free			Free	
Grade		0%			0%			0%			0%	
Peak Hour Factor	0.93	0.93	0.93	0.93	0.93	0.93	0.93	0.93	0.93	0.93	0.93	0.93
Hourly flow rate (vph)	34	26	0	0	10	18	45	2125	23	0	0	0
Pedestrians												
Lane Width (ft)												
Walking Speed (ft/s)												
Percent Blockage												
Right turn flare (veh)												
Median type								None			None	
Median storage veh)												
Upstream signal (ft)												
pX, platoon unblocked												
vC, conflicting volume	822	2238	0	2240	2227	720	0			2148		
vC1, stage 1 conf vol												
vC2, stage 2 conf vol												
vCu, unblocked vol	822	2238	0	2240	2227	720	0			2148		
tC, single (s)	7.5	6.5	6.9	7.5	6.5	6.9	4.1			4.1		
tC, 2 stage (s)												
tF (s)	3.5	4.0	3.3	3.5	4.0	3.3	2.2			2.2		
p0 queue free %	83	35	100	100	76	95	97			100		
cM capacity (veh/h)	202	41	1084	11	41	371	1622			248		

Direction, Lane #	EB 1	WB 1	NE 1	NE 2	NE 3
Volume Total	60	28	577	1062	554
Volume Left	34	0	45	0	0
Volume Right	0	18	0	0	23
cSH	74	95	1622	1700	1700
Volume to Capacity	0.82	0.29	0.03	0.62	0.33
Queue Length 95th (ft)	100	27	2	0	0
Control Delay (s)	153.0	57.7	0.8	0.0	0.0
Lane LOS	F	F	A		
Approach Delay (s)	153.0	57.7	0.2		
Approach LOS	F	F			

Intersection Summary			
Average Delay	5.0		
Intersection Capacity Utilization	55.9%	ICU Level of Service	B
Analysis Period (min)	15		

Movement	EBL	EBT	EBR	WBL	WBT	WBR	NEL	NET	NER	SWL	SWT	SWR
Lane Configurations												
Volume (veh/h)	0	24	0	0	3	0	1	1803	7	0	0	0
Sign Control		Stop			Stop			Free			Free	
Grade		0%			0%			0%			0%	
Peak Hour Factor	0.91	0.91	0.91	0.91	0.91	0.91	0.91	0.91	0.91	0.91	0.91	0.91
Hourly flow rate (vph)	0	31	0	0	4	0	1	2318	9	0	0	0
Pedestrians												
Lane Width (ft)												
Walking Speed (ft/s)												
Percent Blockage												
Right turn flare (veh)												
Median type								None			None	
Median storage veh)												
Upstream signal (ft)												
pX, platoon unblocked												
vC, conflicting volume	777	2330	0	2341	2325	777	0			2327		
vC1, stage 1 conf vol												
vC2, stage 2 conf vol												
vCu, unblocked vol	777	2330	0	2341	2325	777	0			2327		
tC, single (s)	7.5	6.5	6.9	7.5	6.5	6.9	4.1			4.1		
tC, 2 stage (s)												
tF (s)	3.5	4.0	3.3	3.5	4.0	3.3	2.2			2.2		
p0 queue free %	100	15	100	100	90	100	100			100		
cM capacity (veh/h)	263	37	1084	6	37	340	1622			210		

Direction, Lane #	EB 1	WB 1	NE 1	NE 2	NE 3
Volume Total	31	4	581	1159	589
Volume Left	0	0	1	0	0
Volume Right	0	0	0	0	9
cSH	37	37	1622	1700	1700
Volume to Capacity	0.85	0.10	0.00	0.68	0.35
Queue Length 95th (ft)	77	8	0	0	0
Control Delay (s)	265.6	114.1	0.0	0.0	0.0
Lane LOS	F	F	A		
Approach Delay (s)	265.6	114.1	0.0		
Approach LOS	F	F			

Intersection Summary			
Average Delay	3.7		
Intersection Capacity Utilization	51.0%	ICU Level of Service	A
Analysis Period (min)	15		

Appendix G

2025 Background Traffic w/ Link

2035 Background Traffic w/ Link

2045 Background Traffic w/ Link

Synchro Output Sheets

HCM Unsignalized Intersection Capacity Analysis
1: SW 97th Ave. & SW 174th St.

2/11/2015

Movement	EBL	EBT	EBR	WBL	WBT	WBR	NBL	NBT	NBR	SBL	SBT	SBR
Lane Configurations												
Sign Control		Stop			Stop			Stop			Stop	
Volume (vph)	3	129	25	26	96	0	20	14	11	1	0	1
Peak Hour Factor	0.84	0.84	0.84	0.84	0.84	0.84	0.84	0.84	0.84	0.84	0.84	0.84
Hourly flow rate (vph)	4	154	30	31	114	0	24	17	13	1	0	1

Direction, Lane #	EB 1	WB 1	NB 1	SB 1
Volume Total (vph)	187	145	54	2
Volume Left (vph)	4	31	24	1
Volume Right (vph)	30	0	13	1
Hadj (s)	-0.06	0.08	-0.02	-0.17
Departure Headway (s)	4.1	4.3	4.6	4.5
Degree Utilization, x	0.21	0.17	0.07	0.00
Capacity (veh/h)	853	819	726	724
Control Delay (s)	8.3	8.2	7.9	7.5
Approach Delay (s)	8.3	8.2	7.9	7.5
Approach LOS	A	A	A	A

Intersection Summary			
Delay	8.2		
HCM Level of Service	A		
Intersection Capacity Utilization	28.3%	ICU Level of Service	A
Analysis Period (min)	15		

Lane Group	EBL	NBT	SBT	NET
Lane Group Flow (vph)	86	269	10	3915
v/c Ratio	1.01	1.10	0.07	1.03
Control Delay	176.3	135.6	69.1	45.0
Queue Delay	0.0	0.0	0.0	0.0
Total Delay	176.3	135.6	69.1	45.0
Queue Length 50th (ft)	~99	~265	10	~1702
Queue Length 95th (ft)	#204	#407	30	1263
Internal Link Dist (ft)	257	1041	665	1300
Turn Bay Length (ft)				
Base Capacity (vph)	85	244	142	3799
Starvation Cap Reductn	0	0	0	0
Spillback Cap Reductn	0	0	0	0
Storage Cap Reductn	0	0	0	0
Reduced v/c Ratio	1.01	1.10	0.07	1.03

Intersection Summary

~ Volume exceeds capacity, queue is theoretically infinite.
Queue shown is maximum after two cycles.

95th percentile volume exceeds capacity, queue may be longer.
Queue shown is maximum after two cycles.

Movement	EBL	EBR	NBL	NBT	NBR	SBL	SBT	NEL2	NEL	NET	NER
Lane Configurations											
Volume (vph)	1	71	3	11	212	3	5	1	2	3280	6
Ideal Flow (vphpl)	1900	1900	1900	1900	1900	1900	1900	1900	1900	1900	1900
Total Lost time (s)	5.0			5.0			5.0			5.0	
Lane Util. Factor	1.00			1.00			1.00			0.91	
Frt	0.87			0.87			1.00			1.00	
Flt Protected	1.00			1.00			0.98			1.00	
Satd. Flow (prot)	1613			1626			1826			5084	
Flt Permitted	1.00			1.00			0.68			1.00	
Satd. Flow (perm)	1613			1622			1273			5084	
Peak-hour factor, PHF	0.84	0.84	0.84	0.84	0.84	0.84	0.84	0.84	0.84	0.84	0.84
Adj. Flow (vph)	1	85	4	13	252	4	6	1	2	3905	7
RTOR Reduction (vph)	0	0	0	63	0	0	0	0	0	0	0
Lane Group Flow (vph)	86	0	0	206	0	0	10	0	0	3915	0
Turn Type	NA		Perm	NA		Perm	NA	Perm	Perm	NA	
Protected Phases	3			4			8			6	
Permitted Phases			4			8		6	6		
Actuated Green, G (s)	9.0			19.0			19.0			127.0	
Effective Green, g (s)	9.0			19.0			19.0			127.0	
Actuated g/C Ratio	0.05			0.11			0.11			0.75	
Clearance Time (s)	5.0			5.0			5.0			5.0	
Vehicle Extension (s)	3.0			3.0			3.0			3.0	
Lane Grp Cap (vph)	85			181			142			3798	
v/s Ratio Prot	c0.05										
v/s Ratio Perm				c0.13			0.01			0.77	
v/c Ratio	1.01			1.14			0.07			1.03	
Uniform Delay, d1	80.5			75.5			67.6			21.5	
Progression Factor	1.00			1.00			1.00			1.00	
Incremental Delay, d2	100.9			108.8			1.0			23.3	
Delay (s)	181.4			184.3			68.6			44.8	
Level of Service	F			F			E			D	
Approach Delay (s)	181.4			184.3			68.6			44.8	
Approach LOS	F			F			E			D	

Intersection Summary			
HCM Average Control Delay	56.4	HCM Level of Service	E
HCM Volume to Capacity ratio	1.04		
Actuated Cycle Length (s)	170.0	Sum of lost time (s)	15.0
Intersection Capacity Utilization	95.8%	ICU Level of Service	F
Analysis Period (min)	15		
c Critical Lane Group			

Movement	EBL	EBR	NBL	NBT	SBT	SBR
Lane Configurations						
Volume (veh/h)	8	32	34	237	42	0
Sign Control	Stop			Free	Free	
Grade	0%			0%	0%	
Peak Hour Factor	0.90	0.90	0.90	0.90	0.90	0.90
Hourly flow rate (vph)	9	36	38	263	47	0
Pedestrians						
Lane Width (ft)						
Walking Speed (ft/s)						
Percent Blockage						
Right turn flare (veh)						
Median type				None	None	
Median storage veh)						
Upstream signal (ft)					1121	
pX, platoon unblocked						
vC, conflicting volume	386	47	47			
vC1, stage 1 conf vol						
vC2, stage 2 conf vol						
vCu, unblocked vol	386	47	47			
tC, single (s)	6.4	6.2	4.1			
tC, 2 stage (s)						
tF (s)	3.5	3.3	2.2			
p0 queue free %	99	97	98			
cM capacity (veh/h)	603	1023	1561			

Direction, Lane #	EB 1	NB 1	SB 1
Volume Total	44	301	47
Volume Left	9	38	0
Volume Right	36	0	0
cSH	897	1561	1700
Volume to Capacity	0.05	0.02	0.03
Queue Length 95th (ft)	4	2	0
Control Delay (s)	9.2	1.1	0.0
Lane LOS	A	A	
Approach Delay (s)	9.2	1.1	0.0
Approach LOS	A		

Intersection Summary			
Average Delay	1.9		
Intersection Capacity Utilization	31.0%	ICU Level of Service	A
Analysis Period (min)	15		

Movement	WBL	WBR	NBT	NBR	SBL	SBT
Lane Configurations						
Volume (veh/h)	19	24	248	14	6	47
Sign Control	Stop		Free			Free
Grade	0%		0%			0%
Peak Hour Factor	0.89	0.89	0.89	0.89	0.89	0.89
Hourly flow rate (vph)	21	27	279	16	7	53
Pedestrians						
Lane Width (ft)						
Walking Speed (ft/s)						
Percent Blockage						
Right turn flare (veh)						
Median type			None			None
Median storage veh)						
Upstream signal (ft)						
pX, platoon unblocked						
vC, conflicting volume	353	287			294	
vC1, stage 1 conf vol						
vC2, stage 2 conf vol						
vCu, unblocked vol	353	287			294	
tC, single (s)	6.4	6.2			4.1	
tC, 2 stage (s)						
tF (s)	3.5	3.3			2.2	
p0 queue free %	97	96			99	
cM capacity (veh/h)	641	753			1267	

Direction, Lane #	WB 1	NB 1	SB 1
Volume Total	48	294	60
Volume Left	21	0	7
Volume Right	27	16	0
cSH	699	1700	1267
Volume to Capacity	0.07	0.17	0.01
Queue Length 95th (ft)	6	0	0
Control Delay (s)	10.5	0.0	0.9
Lane LOS	B		A
Approach Delay (s)	10.5	0.0	0.9
Approach LOS	B		

Intersection Summary			
Average Delay	1.4		
Intersection Capacity Utilization	23.9%	ICU Level of Service	A
Analysis Period (min)	15		

Movement	EBL	EBR	NBL	NBT	SBT	SBR
Lane Configurations						
Volume (veh/h)	5	22	16	279	65	0
Sign Control	Stop			Free	Free	
Grade	0%			0%	0%	
Peak Hour Factor	0.95	0.95	0.95	0.95	0.95	0.95
Hourly flow rate (vph)	5	23	17	294	68	0
Pedestrians						
Lane Width (ft)						
Walking Speed (ft/s)						
Percent Blockage						
Right turn flare (veh)						
Median type				None	None	
Median storage veh)						
Upstream signal (ft)				1230		
pX, platoon unblocked						
vC, conflicting volume	396	68	68			
vC1, stage 1 conf vol						
vC2, stage 2 conf vol						
vCu, unblocked vol	396	68	68			
tC, single (s)	6.4	6.2	4.1			
tC, 2 stage (s)						
tF (s)	3.5	3.3	2.2			
p0 queue free %	99	98	99			
cM capacity (veh/h)	602	995	1533			

Direction, Lane #	EB 1	NB 1	SB 1
Volume Total	28	311	68
Volume Left	5	17	0
Volume Right	23	0	0
cSH	888	1533	1700
Volume to Capacity	0.03	0.01	0.04
Queue Length 95th (ft)	2	1	0
Control Delay (s)	9.2	0.5	0.0
Lane LOS	A	A	
Approach Delay (s)	9.2	0.5	0.0
Approach LOS	A		

Intersection Summary			
Average Delay	1.0		
Intersection Capacity Utilization	32.2%	ICU Level of Service	A
Analysis Period (min)	15		

Movement	EBL	EBT	EBR	WBL	WBT	WBR	NBL	NBT	NBR	SBL	SBT	SBR
Lane Configurations												
Volume (veh/h)	12	3	7	2	8	16	11	271	0	4	74	6
Sign Control		Stop			Stop			Free			Free	
Grade		0%			0%			0%			0%	
Peak Hour Factor	0.93	0.93	0.93	0.93	0.93	0.93	0.93	0.93	0.93	0.93	0.93	0.93
Hourly flow rate (vph)	13	3	8	2	9	17	12	291	0	4	80	6
Pedestrians												
Lane Width (ft)												
Walking Speed (ft/s)												
Percent Blockage												
Right turn flare (veh)												
Median type								None			None	
Median storage veh)												
Upstream signal (ft)								904				
pX, platoon unblocked	0.97	0.97		0.97	0.97	0.97				0.97		
vC, conflicting volume	428	406	83	416	410	291	86			291		
vC1, stage 1 conf vol												
vC2, stage 2 conf vol												
vCu, unblocked vol	400	378	83	388	382	260	86			260		
tC, single (s)	7.1	6.5	6.2	7.1	6.5	6.2	4.1			4.1		
tC, 2 stage (s)												
tF (s)	3.5	4.0	3.3	3.5	4.0	3.3	2.2			2.2		
p0 queue free %	98	99	99	100	98	98	99			100		
cM capacity (veh/h)	523	534	977	545	531	759	1510			1271		

Direction, Lane #	EB 1	WB 1	NB 1	SB 1
Volume Total	24	28	303	90
Volume Left	13	2	12	4
Volume Right	8	17	0	6
cSH	615	653	1510	1271
Volume to Capacity	0.04	0.04	0.01	0.00
Queue Length 95th (ft)	3	3	1	0
Control Delay (s)	11.1	10.8	0.4	0.4
Lane LOS	B	B	A	A
Approach Delay (s)	11.1	10.8	0.4	0.4
Approach LOS	B	B		

Intersection Summary			
Average Delay	1.6		
Intersection Capacity Utilization	29.8%	ICU Level of Service	A
Analysis Period (min)	15		

Movement	EBL	EBT	EBR	WBL	WBT	WBR	NBL	NBT	NBR	SBL	SBT	SBR
Lane Configurations												
Volume (veh/h)	5	1	2	0	4	1	2	275	2	0	75	5
Sign Control		Stop			Stop			Free			Free	
Grade		0%			0%			0%			0%	
Peak Hour Factor	0.91	0.91	0.91	0.91	0.91	0.91	0.91	0.91	0.91	0.91	0.91	0.91
Hourly flow rate (vph)	5	1	2	0	4	1	2	302	2	0	82	5
Pedestrians												
Lane Width (ft)												
Walking Speed (ft/s)												
Percent Blockage												
Right turn flare (veh)												
Median type								None			None	
Median storage veh)												
Upstream signal (ft)								601				
pX, platoon unblocked	0.91	0.91		0.91	0.91	0.91				0.91		
vC, conflicting volume	396	394	85	396	396	303	88			304		
vC1, stage 1 conf vol												
vC2, stage 2 conf vol												
vCu, unblocked vol	292	289	85	291	291	190	88			191		
tC, single (s)	7.1	6.5	6.2	7.1	6.5	6.2	4.1			4.1		
tC, 2 stage (s)												
tF (s)	3.5	4.0	3.3	3.5	4.0	3.3	2.2			2.2		
p0 queue free %	99	100	100	100	99	100	100			100		
cM capacity (veh/h)	598	566	974	601	565	778	1508			1263		

Direction, Lane #	EB 1	WB 1	NB 1	SB 1
Volume Total	9	5	307	88
Volume Left	5	0	2	0
Volume Right	2	1	2	5
cSH	657	598	1508	1263
Volume to Capacity	0.01	0.01	0.00	0.00
Queue Length 95th (ft)	1	1	0	0
Control Delay (s)	10.6	11.1	0.1	0.0
Lane LOS	B	B	A	
Approach Delay (s)	10.6	11.1	0.1	0.0
Approach LOS	B	B		

Intersection Summary			
Average Delay	0.4		
Intersection Capacity Utilization	27.6%	ICU Level of Service	A
Analysis Period (min)	15		

Movement	EBL	EBT	EBR	WBL	WBT	WBR	NBL	NBT	NBR	SBL	SBT	SBR
Lane Configurations												
Volume (veh/h)	2	3	31	0	1	1	16	267	3	1	74	6
Sign Control		Stop			Stop			Free			Free	
Grade		0%			0%			0%			0%	
Peak Hour Factor	0.94	0.94	0.94	0.94	0.94	0.94	0.94	0.94	0.94	0.94	0.94	0.94
Hourly flow rate (vph)	2	3	33	0	1	1	17	284	3	1	79	6
Pedestrians												
Lane Width (ft)												
Walking Speed (ft/s)												
Percent Blockage												
Right turn flare (veh)												
Median type								None			None	
Median storage veh)												
Upstream signal (ft)								300				
pX, platoon unblocked	0.86	0.86		0.86	0.86	0.86				0.86		
vC, conflicting volume	405	405	82	438	407	286	85			287		
vC1, stage 1 conf vol												
vC2, stage 2 conf vol												
vCu, unblocked vol	231	231	82	269	232	92	85			94		
tC, single (s)	7.1	6.5	6.2	7.1	6.5	6.2	4.1			4.1		
tC, 2 stage (s)												
tF (s)	3.5	4.0	3.3	3.5	4.0	3.3	2.2			2.2		
p0 queue free %	100	99	97	100	100	100	99			100		
cM capacity (veh/h)	617	570	978	562	569	833	1511			1294		

Direction, Lane #	EB 1	WB 1	NB 1	SB 1
Volume Total	38	2	304	86
Volume Left	2	0	17	1
Volume Right	33	1	3	6
cSH	895	676	1511	1294
Volume to Capacity	0.04	0.00	0.01	0.00
Queue Length 95th (ft)	3	0	1	0
Control Delay (s)	9.2	10.3	0.5	0.1
Lane LOS	A	B	A	A
Approach Delay (s)	9.2	10.3	0.5	0.1
Approach LOS	A	B		

Intersection Summary			
Average Delay	1.2		
Intersection Capacity Utilization	32.4%	ICU Level of Service	A
Analysis Period (min)	15		

Lane Group	EBL	EBT	EBR	WBL	WBT	NBL	NBT	SBL	SBT
Lane Group Flow (vph)	48	424	112	145	577	220	572	15	75
v/c Ratio	0.10	0.72	0.23	0.31	0.46	0.40	0.66	0.04	0.12
Control Delay	14.1	36.6	7.6	16.2	26.5	23.1	28.0	19.4	34.5
Queue Delay	0.0	0.0	0.0	0.0	0.0	0.0	0.0	0.0	0.0
Total Delay	14.1	36.6	7.6	16.2	26.5	23.1	28.0	19.4	34.5
Queue Length 50th (ft)	13	180	0	41	137	91	113	6	20
Queue Length 95th (ft)	38	332	44	94	225	162	181	19	43
Internal Link Dist (ft)		1915			531		229		156
Turn Bay Length (ft)	130			95		155		130	
Base Capacity (vph)	537	731	594	448	1518	540	1065	406	844
Starvation Cap Reductn	0	0	0	0	0	0	0	0	0
Spillback Cap Reductn	0	0	0	0	0	0	0	0	0
Storage Cap Reductn	0	0	0	0	0	0	0	0	0
Reduced v/c Ratio	0.09	0.58	0.19	0.32	0.38	0.41	0.54	0.04	0.09

Intersection Summary

Movement	EBL	EBT	EBR	WBL	WBT	WBR	NBL	NBT	NBR	SBL	SBT	SBR
Lane Configurations												
Volume (vph)	46	403	106	138	494	54	209	280	263	14	69	2
Ideal Flow (vphpl)	1900	1900	1900	1900	1900	1900	1900	1900	1900	1900	1900	1900
Total Lost time (s)	3.0	3.0	5.0	3.0	3.0		3.0	3.0		3.0	3.0	
Lane Util. Factor	1.00	1.00	1.00	1.00	0.95		1.00	0.95		1.00	0.95	
Frt	1.00	1.00	0.85	1.00	0.99		1.00	0.93		1.00	1.00	
Flt Protected	0.95	1.00	1.00	0.95	1.00		0.95	1.00		0.95	1.00	
Satd. Flow (prot)	1770	1863	1583	1770	3487		1770	3282		1770	3525	
Flt Permitted	0.39	1.00	1.00	0.44	1.00		0.71	1.00		0.42	1.00	
Satd. Flow (perm)	731	1863	1583	823	3487		1314	3282		775	3525	
Peak-hour factor, PHF	0.95	0.95	0.95	0.95	0.95	0.95	0.95	0.95	0.95	0.95	0.95	0.95
Adj. Flow (vph)	48	424	112	145	520	57	220	295	277	15	73	2
RTOR Reduction (vph)	0	0	84	0	7	0	0	147	0	0	2	0
Lane Group Flow (vph)	48	424	28	145	570	0	220	425	0	15	73	0
Turn Type	custom	NA	custom	custom	NA		custom	NA		custom	NA	
Protected Phases	1 2	2 4		1 3	3 4		5 6	6 8		5 7	7 8	
Permitted Phases	4		4	4			8			8		
Actuated Green, G (s)	38.9	28.7	24.5	36.9	32.7		31.9	17.6		25.4	17.1	
Effective Green, g (s)	38.9	28.7	24.5	36.9	32.7		31.9	17.6		25.4	17.1	
Actuated g/C Ratio	0.39	0.29	0.25	0.37	0.33		0.32	0.18		0.25	0.17	
Clearance Time (s)			5.0									
Vehicle Extension (s)			3.0									
Lane Grp Cap (vph)	435	536	389	422	1144		510	579		327	605	
v/s Ratio Prot	0.02	c0.23		c0.04	c0.16		c0.08	c0.13		0.01	c0.02	
v/s Ratio Perm	0.03		0.02	0.08			0.05			0.01		
v/c Ratio	0.11	0.79	0.07	0.34	0.50		0.43	0.73		0.05	0.12	
Uniform Delay, d1	19.1	32.7	28.9	21.6	26.9		26.3	38.8		27.9	34.9	
Progression Factor	1.00	1.00	1.00	1.00	1.00		1.00	1.00		1.00	1.00	
Incremental Delay, d2	0.1	7.8	0.1	0.5	0.3		0.6	4.8		0.1	0.1	
Delay (s)	19.2	40.6	28.9	22.1	27.2		26.9	43.7		28.0	35.0	
Level of Service	B	D	C	C	C		C	D		C	D	
Approach Delay (s)		36.6			26.2			39.0			33.9	
Approach LOS		D			C			D			C	

Intersection Summary			
HCM Average Control Delay	33.9	HCM Level of Service	C
HCM Volume to Capacity ratio	0.61		
Actuated Cycle Length (s)	99.7	Sum of lost time (s)	24.0
Intersection Capacity Utilization	57.1%	ICU Level of Service	B
Analysis Period (min)	15		
c Critical Lane Group			

Movement	EBL	EBT	WBT	WBR	SBL	SBR
Lane Configurations						
Volume (veh/h)	268	524	656	29	20	73
Sign Control		Free	Free		Stop	
Grade		0%	0%		0%	
Peak Hour Factor	0.88	0.88	0.88	0.88	0.88	0.88
Hourly flow rate (vph)	305	595	745	33	23	83
Pedestrians						
Lane Width (ft)						
Walking Speed (ft/s)						
Percent Blockage						
Right turn flare (veh)						
Median type		None	None			
Median storage veh)						
Upstream signal (ft)		611				
pX, platoon unblocked					0.87	
vC, conflicting volume	778				1966	762
vC1, stage 1 conf vol						
vC2, stage 2 conf vol						
vCu, unblocked vol	778				2038	762
tC, single (s)	4.1				6.4	6.2
tC, 2 stage (s)						
tF (s)	2.2				3.5	3.3
p0 queue free %	64				34	80
cM capacity (veh/h)	838				34	405

Direction, Lane #	EB 1	EB 2	WB 1	SB 1
Volume Total	305	595	778	106
Volume Left	305	0	0	23
Volume Right	0	0	33	83
cSH	838	1700	1700	122
Volume to Capacity	0.36	0.35	0.46	0.87
Queue Length 95th (ft)	42	0	0	134
Control Delay (s)	11.7	0.0	0.0	115.5
Lane LOS	B			F
Approach Delay (s)	4.0		0.0	115.5
Approach LOS				F

Intersection Summary			
Average Delay	8.8		
Intersection Capacity Utilization	66.7%	ICU Level of Service	C
Analysis Period (min)	15		

Lane Group	EBL	EBT	WBL	WBT	NBL	NBT	SBL	SBT
Lane Group Flow (vph)	443	551	174	596	64	2154	127	1626
v/c Ratio	1.01	0.63	0.63	1.03	0.50	0.99	0.99	0.75
Control Delay	108.2	60.9	77.0	112.8	36.4	64.4	113.9	42.9
Queue Delay	0.0	0.0	0.0	0.0	0.0	0.0	0.0	0.0
Total Delay	108.2	60.9	77.0	112.8	36.4	64.4	113.9	42.9
Queue Length 50th (ft)	~517	291	201	~389	36	865	92	552
Queue Length 95th (ft)	#663	330	276	#466	60	831	#212	550
Internal Link Dist (ft)		364		1915		469		768
Turn Bay Length (ft)			286		160		130	
Base Capacity (vph)	437	874	275	577	132	2178	128	2172
Starvation Cap Reductn	0	0	0	0	0	0	0	0
Spillback Cap Reductn	0	0	0	0	0	0	0	0
Storage Cap Reductn	0	0	0	0	0	0	0	0
Reduced v/c Ratio	1.01	0.63	0.63	1.03	0.48	0.99	0.99	0.75

Intersection Summary

~ Volume exceeds capacity, queue is theoretically infinite.
Queue shown is maximum after two cycles.

95th percentile volume exceeds capacity, queue may be longer.
Queue shown is maximum after two cycles.

Movement	EBL	EBT	EBR	WBL	WBT	WBR	NBL	NBT	NBR	SBL	SBT	SBR
Lane Configurations												
Volume (vph)	372	459	4	162	479	6	54	1768	41	107	1238	128
Ideal Flow (vphpl)	1900	1900	1900	1900	1900	1900	1900	1900	1900	1900	1900	1900
Total Lost time (s)	5.0	5.0		5.0	5.0		3.0	5.0		3.0	5.0	
Lane Util. Factor	1.00	0.95		0.91	0.91		1.00	0.91		1.00	0.91	
Frt	1.00	1.00		1.00	1.00		1.00	1.00		1.00	0.99	
Flt Protected	0.95	1.00		0.95	1.00		0.95	1.00		0.95	1.00	
Satd. Flow (prot)	1770	3534		1610	3379		1770	5068		1770	5014	
Flt Permitted	0.95	1.00		0.95	1.00		0.06	1.00		0.05	1.00	
Satd. Flow (perm)	1770	3534		1610	3379		111	5068		102	5014	
Peak-hour factor, PHF	0.84	0.84	0.84	0.84	0.84	0.84	0.84	0.84	0.84	0.84	0.84	0.84
Adj. Flow (vph)	443	546	5	193	570	7	64	2105	49	127	1474	152
RTOR Reduction (vph)	0	0	0	0	1	0	0	1	0	0	7	0
Lane Group Flow (vph)	443	551	0	174	595	0	64	2153	0	127	1619	0
Turn Type	Split	NA		Split	NA		pm+pt	NA		pm+pt	NA	
Protected Phases	4	4		8	8		5	2		1	6	
Permitted Phases							2			6		
Actuated Green, G (s)	42.0	42.0		29.0	29.0		80.6	73.0		81.4	73.4	
Effective Green, g (s)	42.0	42.0		29.0	29.0		80.6	73.0		81.4	73.4	
Actuated g/C Ratio	0.25	0.25		0.17	0.17		0.47	0.43		0.48	0.43	
Clearance Time (s)	5.0	5.0		5.0	5.0		3.0	5.0		3.0	5.0	
Vehicle Extension (s)	3.0	3.0		3.0	3.0		3.0	3.0		3.0	3.0	
Lane Grp Cap (vph)	437	873		275	576		127	2176		127	2165	
v/s Ratio Prot	c0.25	0.16		0.11	c0.18		0.02	0.42		c0.05	0.32	
v/s Ratio Perm							0.22			c0.43		
v/c Ratio	1.01	0.63		0.63	1.03		0.50	0.99		1.00	0.75	
Uniform Delay, d1	64.0	57.1		65.5	70.5		31.4	48.1		48.3	40.5	
Progression Factor	1.00	1.00		1.00	1.00		1.00	1.00		1.00	1.00	
Incremental Delay, d2	46.5	1.5		4.7	46.3		3.1	16.9		79.9	1.4	
Delay (s)	110.5	58.6		70.2	116.8		34.5	65.1		128.2	42.0	
Level of Service	F	E		E	F		C	E		F	D	
Approach Delay (s)		81.7			106.3			64.2			48.2	
Approach LOS		F			F			E			D	

Intersection Summary			
HCM Average Control Delay	68.0	HCM Level of Service	E
HCM Volume to Capacity ratio	0.98		
Actuated Cycle Length (s)	170.0	Sum of lost time (s)	13.0
Intersection Capacity Utilization	90.7%	ICU Level of Service	E
Analysis Period (min)	15		
c Critical Lane Group			

Movement	EBL	EBT	EBR	WBL	WBT	WBR	NBL	NBT	NBR	SBL	SBT	SBR
Lane Configurations												
Volume (vph)	372	459	4	162	479	6	54	1768	41	107	1238	128
Movement Number	7	4	14	3	8	18	5	2	12	1	6	16
Initial Queue, veh	0	0	0	0	0	0	0	0	0	0	0	0
Ped-Bike Adj. Factor (A_pbT)	1.00		1.00	1.00		1.00	1.00		1.00	1.00		1.00
Parking, Bus Adj. Factors	1.00	1.00	1.00	1.00	1.00	1.00	1.00	1.00	1.00	1.00	1.00	1.00
Adj. Sat. Flow Rate, veh/h/ln	1863	1863	1863	1863	1863	1863	1863	1863	1863	1863	1863	1863
Lanes	1	2	0	1	2	0	1	3	0	1	3	0
Lane Assignment												
Capacity, veh/h	440	915	8	297	614	8	157	2205	51	132	2097	217
Proportion Arriving On Green	0.25	0.25	0.25	0.17	0.17	0.17	0.03	0.43	0.43	0.05	0.45	0.45
Movement Delay, s/veh	108.1	58.3	58.3	70.6	101.6	101.9	33.2	61.4	69.5	113.7	39.1	40.5
Movement LOS	F	E	E	E	F	F	C	E	E	F	D	D
Approach Volume, veh/h		994			770			2218			1754	
Approach Delay, s/veh		80.5			93.9			63.3			45.0	
Approach LOS		F			F			E			D	

Timer:	1	2	3	4	5	6	7	8
Assigned Phase	1	2	8	4	5	6		
Case No	1.1	4.0	10.0	10.0	1.1	4.0		
Phase Duration (G+Y+Rc), s	11.00	78.00	33.30	47.00	8.19	80.81		
Change Period (Y+Rc), s	3.00	5.00	5.00	5.00	3.00	5.00		
Max. Allowable Headway (MAH), s	4.00	3.92	3.93	3.95	4.00	3.92		
Maximum Green Setting (Gmax), s	8.00	73.00	29.00	42.00	8.00	73.00		
Max. Queue Clearance Time (g_c+I1), s	9.50	69.56	27.94	44.00	5.43	44.96		
Green Extension Time (g_e), s	0.00	3.26	0.37	0.00	0.03	21.83		
Probability of Phase Call (p_c)	0.997	1.000	1.000	1.000	0.951	1.000		
Probability of Max Out (p_x)	1.000	1.000	1.000	1.000	1.000	0.746		

Left-Turn Movement Data					
Assigned Movement	1		3	7	5
Mvmt. Sat Flow, veh/h	1774.04		1774.04	1774.04	1774.04

Through Movement Data					
Assigned Movement		2	8	4	6
Mvmt. Sat Flow, veh/h		5113.66	3671.41	3687.69	4683.49

Right-Turn Movement Data					
Assigned Movement		12	18	14	16
Mvmt. Sat Flow, veh/h		118.39	45.97	32.13	484.03

Left Lane Group Data								
Assigned Movement	1	0	3	7	5	0	0	0
Lane Assignment	L (Pr/Pm)		L		LL (Pr/Pm)			
Lanes in Group	1	0	1	1	1	0	0	0
Group Volume (v), veh/h	127.4	0.0	192.9	442.9	64.3	0.0	0.0	0.0
Group Sat. Flow (s), veh/h/ln	1774.0	0.0	1774.0	1774.0	1774.0	0.0	0.0	0.0
Queue Serve Time (g_s), s	7.5	0.0	17.2	42.0	3.4	0.0	0.0	0.0
Cycle Queue Clear Time (g_c), s	7.5	0.0	17.2	42.0	3.4	0.0	0.0	0.0

Perm LT Sat Flow Rate (s_l), veh/h/ln	184.4	0.0	1774.0	1774.0	308.6	0.0	0.0	0.0
Shared LT Sat Flow (s_sh), veh/h/ln	0.0	0.0	0.0	0.0	0.0	0.0	0.0	0.0
Perm LT Eff. Green (g_p), s	77.6	0.0	0.0	0.0	73.0	0.0	0.0	0.0
Perm LT Serve Time (g_u), s	5.4	0.0	0.0	0.0	32.9	0.0	0.0	0.0
Perm LT Que Serve Time (g_ps), s	5.4	0.0	0.0	0.0	10.6	0.0	0.0	0.0
Time to First Blk (g_f), s	0.0	0.0	0.0	0.0	0.0	0.0	0.0	0.0
Serve Time pre Blk (g_fs), s	0.0	0.0	0.0	0.0	0.0	0.0	0.0	0.0
Proportion LT Inside Lane (P_L)	1.000	0.000	1.000	1.000	1.000	0.000	0.000	0.000
Lane Group Capacity (c), veh/h	132.3	0.0	296.6	440.1	156.8	0.0	0.0	0.0
Volume-to-Capacity Ratio (X)	0.963	0.000	0.650	1.006	0.410	0.000	0.000	0.000
Available Capacity (c_a), veh/h	132.3	0.0	303.9	440.1	186.2	0.0	0.0	0.0
Upstream Filter Factor (I)	1.000	0.000	1.000	1.000	1.000	0.000	0.000	0.000
Uniform Delay (d1), s/veh	47.0	0.0	65.9	63.7	31.5	0.0	0.0	0.0
Incremental Delay (d2), s/veh	66.7	0.0	4.7	44.5	1.7	0.0	0.0	0.0
Initial Queue Delay (d3), s/veh	0.0	0.0	0.0	0.0	0.0	0.0	0.0	0.0
Control Delay (d), s/veh	113.7	0.0	70.6	108.1	33.2	0.0	0.0	0.0
First-Term Queue (Q1), veh/ln	3.3	0.0	7.9	19.0	1.5	0.0	0.0	0.0
Second-Term Queue (Q2), veh/ln	2.4	0.0	0.4	5.4	0.1	0.0	0.0	0.0
Third-Term Queue (Q3), veh/ln	0.0	0.0	0.0	0.0	0.0	0.0	0.0	0.0
Percentile bk-of-que factor (f_B%)	1.000	0.000	1.000	1.000	1.000	0.000	0.000	0.000
Percentile Back of Queue (Q%), veh/ln	5.7	0.0	8.2	24.4	1.6	0.0	0.0	0.0
Percentile Storage Ratio (RQ%)	1.12	0.00	0.73	1.80	0.25	0.00	0.00	0.00
Initial Queue (Qb), veh	0.0	0.0	0.0	0.0	0.0	0.0	0.0	0.0
Final (Residual) Queue (Qe), veh	0.0	0.0	0.0	0.7	0.0	0.0	0.0	0.0
Saturated Delay (ds), s/veh	0.0	0.0	0.0	0.0	0.0	0.0	0.0	0.0
Saturated Queue (Qs), veh	0.0	0.0	0.0	0.0	0.0	0.0	0.0	0.0
Saturated Capacity (cs), veh/h	0.0	0.0	0.0	0.0	0.0	0.0	0.0	0.0
Initial Queue Clear Time (tc), h	0.0	0.0	0.0	0.3	0.0	0.0	0.0	0.0

Middle Lane Group Data								
Assigned Movement	0	2	8	4	0	6	0	0
Lane Assignment		T	T	T		T		
Lanes in Group	0	2	1	1	0	2	0	0
Group Volume (v), veh/h	0.0	1394.2	289.2	275.9	0.0	1066.7	0.0	0.0
Group Sat. Flow (s), veh/h/ln	0.0	1695.1	1862.7	1862.7	0.0	1695.1	0.0	0.0
Queue Serve Time (g_s), s	0.0	67.3	25.9	22.1	0.0	42.9	0.0	0.0
Cycle Queue Clear Time (g_c), s	0.0	67.3	25.9	22.1	0.0	42.9	0.0	0.0
Lane Group Capacity (c), veh/h	0.0	1461.8	311.4	462.1	0.0	1518.1	0.0	0.0
Volume-to-Capacity Ratio (X)	0.000	0.954	0.929	0.597	0.000	0.703	0.000	0.000
Available Capacity (c_a), veh/h	0.0	1461.8	319.1	462.1	0.0	1518.1	0.0	0.0
Upstream Filter Factor (I)	0.000	1.000	1.000	1.000	0.000	1.000	0.000	0.000
Uniform Delay (d1), s/veh	0.0	46.5	69.5	56.2	0.0	37.7	0.0	0.0
Incremental Delay (d2), s/veh	0.0	14.8	32.1	2.1	0.0	1.5	0.0	0.0
Initial Queue Delay (d3), s/veh	0.0	0.0	0.0	0.0	0.0	0.0	0.0	0.0
Control Delay (d), s/veh	0.0	61.4	101.6	58.3	0.0	39.1	0.0	0.0
First-Term Queue (Q1), veh/ln	0.0	28.3	12.4	10.5	0.0	18.0	0.0	0.0
Second-Term Queue (Q2), veh/ln	0.0	3.0	2.8	0.3	0.0	0.3	0.0	0.0
Third-Term Queue (Q3), veh/ln	0.0	0.0	0.0	0.0	0.0	0.0	0.0	0.0
Percentile bk-of-que factor (f_B%)	0.000	1.000	1.000	1.000	0.000	1.000	0.000	0.000
Percentile Back of Queue (Q%), veh/ln	0.0	31.3	15.2	10.8	0.0	18.3	0.0	0.0
Percentile Storage Ratio (RQ%)	0.00	1.74	0.21	0.79	0.00	0.63	0.00	0.00

Initial Queue (Qb), veh	0.0	0.0	0.0	0.0	0.0	0.0	0.0	0.0
Final (Residual) Queue (Qe), veh	0.0	0.0	0.0	0.0	0.0	0.0	0.0	0.0
Saturated Delay (ds), s/veh	0.0	0.0	0.0	0.0	0.0	0.0	0.0	0.0
Saturated Queue (Qs), veh	0.0	0.0	0.0	0.0	0.0	0.0	0.0	0.0
Saturated Capacity (cs), veh/h	0.0	0.0	0.0	0.0	0.0	0.0	0.0	0.0
Initial Queue Clear Time (tc), h	0.0	0.0	0.0	0.0	0.0	0.0	0.0	0.0

Right Lane Group Data								
Assigned Movement	0	12	18	14	0	16	0	0
Lane Assignment		T+R	T+R	T+R		T+R		
Lanes in Group	0	1	1	1	0	1	0	0
Group Volume (v), veh/h	0.0	759.4	288.2	275.3	0.0	559.5	0.0	0.0
Group Sat. Flow (s), veh/h/ln	0.0	1841.9	1854.6	1857.1	0.0	1777.3	0.0	0.0
Queue Serve Time (g_s), s	0.0	67.6	25.9	22.2	0.0	43.0	0.0	0.0
Cycle Queue Clear Time (g_c), s	0.0	67.6	25.9	22.2	0.0	43.0	0.0	0.0
Prot RT Sat Flow Rate (s_R), veh/h/ln	0.0	0.0	0.0	0.0	0.0	0.0	0.0	0.0
Prot RT Eff. Green (g_R), s	0.0	0.0	0.0	0.0	0.0	0.0	0.0	0.0
Proportion RT Outside Lane (P_R)	0.000	0.064	0.025	0.017	0.000	0.272	0.000	0.000
Lane Group Capacity (c), veh/h	0.0	794.2	310.1	460.7	0.0	795.9	0.0	0.0
Volume-to-Capacity Ratio (X)	0.000	0.956	0.929	0.597	0.000	0.703	0.000	0.000
Available Capacity (c_a), veh/h	0.0	794.2	317.7	460.7	0.0	795.9	0.0	0.0
Upstream Filter Factor (I)	0.000	1.000	1.000	1.000	0.000	1.000	0.000	0.000
Uniform Delay (d1), s/veh	0.0	46.6	69.5	56.2	0.0	37.7	0.0	0.0
Incremental Delay (d2), s/veh	0.0	22.9	32.3	2.1	0.0	2.8	0.0	0.0
Initial Queue Delay (d3), s/veh	0.0	0.0	0.0	0.0	0.0	0.0	0.0	0.0
Control Delay (d), s/veh	0.0	69.5	101.9	58.3	0.0	40.5	0.0	0.0
First-Term Queue (Q1), veh/ln	0.0	30.8	12.4	10.5	0.0	18.9	0.0	0.0
Second-Term Queue (Q2), veh/ln	0.0	5.1	2.8	0.3	0.0	0.6	0.0	0.0
Third-Term Queue (Q3), veh/ln	0.0	0.0	0.0	0.0	0.0	0.0	0.0	0.0
Percentile bk-of-que factor (f_B%)	0.000	1.000	1.000	1.000	0.000	1.000	0.000	0.000
Percentile Back of Queue (Q%), veh/ln	0.0	35.9	15.2	10.8	0.0	19.5	0.0	0.0
Percentile Storage Ratio (RQ%)	0.00	1.99	0.21	0.79	0.00	0.67	0.00	0.00
Initial Queue (Qb), veh	0.0	0.0	0.0	0.0	0.0	0.0	0.0	0.0
Final (Residual) Queue (Qe), veh	0.0	0.0	0.0	0.0	0.0	0.0	0.0	0.0
Saturated Delay (ds), s/veh	0.0	0.0	0.0	0.0	0.0	0.0	0.0	0.0
Saturated Queue (Qs), veh	0.0	0.0	0.0	0.0	0.0	0.0	0.0	0.0
Saturated Capacity (cs), veh/h	0.0	0.0	0.0	0.0	0.0	0.0	0.0	0.0
Initial Queue Clear Time (tc), h	0.0	0.0	0.0	0.0	0.0	0.0	0.0	0.0

Intersection Summary	
HCM Average Control Delay	64.8
HCM Level of Service	E

Movement	EBL	EBT	EBR	WBL	WBT	WBR	NEL	NET	NER	SWL	SWT	SWR
Lane Configurations												
Volume (veh/h)	14	4	0	0	5	10	34	2443	20	0	0	0
Sign Control		Stop			Stop			Free			Free	
Grade		0%			0%			0%			0%	
Peak Hour Factor	0.96	0.96	0.96	0.96	0.96	0.96	0.96	0.96	0.96	0.96	0.96	0.96
Hourly flow rate (vph)	15	4	0	0	5	10	35	2545	21	0	0	0
Pedestrians												
Lane Width (ft)												
Walking Speed (ft/s)												
Percent Blockage												
Right turn flare (veh)												
Median type								None			None	
Median storage veh)												
Upstream signal (ft)												
pX, platoon unblocked												
vC, conflicting volume	932	2636	0	2628	2626	859	0			2566		
vC1, stage 1 conf vol												
vC2, stage 2 conf vol												
vCu, unblocked vol	932	2636	0	2628	2626	859	0			2566		
tC, single (s)	7.5	6.5	6.9	7.5	6.5	6.9	4.1			4.1		
tC, 2 stage (s)												
tF (s)	3.5	4.0	3.3	3.5	4.0	3.3	2.2			2.2		
p0 queue free %	92	82	100	100	77	97	98			100		
cM capacity (veh/h)	173	23	1084	10	23	300	1622			169		

Direction, Lane #	EB 1	WB 1	NE 1	NE 2	NE 3
Volume Total	19	16	672	1272	657
Volume Left	15	0	35	0	0
Volume Right	0	10	0	0	21
cSH	70	60	1622	1700	1700
Volume to Capacity	0.27	0.26	0.02	0.75	0.39
Queue Length 95th (ft)	24	23	2	0	0
Control Delay (s)	74.4	85.3	0.6	0.0	0.0
Lane LOS	F	F	A		
Approach Delay (s)	74.4	85.3	0.2		
Approach LOS	F	F			

Intersection Summary			
Average Delay	1.2		
Intersection Capacity Utilization	62.7%	ICU Level of Service	B
Analysis Period (min)	15		

Movement	EBL	EBT	EBR	WBL	WBT	WBR	NEL	NET	NER	SWL	SWT	SWR
Lane Configurations												
Volume (veh/h)	2	11	0	0	11	12	5	2465	22	0	0	0
Sign Control		Stop			Stop			Free			Free	
Grade		0%			0%			0%			0%	
Peak Hour Factor	0.93	0.93	0.93	0.93	0.93	0.93	0.93	0.93	0.93	0.93	0.93	0.93
Hourly flow rate (vph)	2	12	0	0	12	13	5	2651	24	0	0	0
Pedestrians												
Lane Width (ft)												
Walking Speed (ft/s)												
Percent Blockage												
Right turn flare (veh)												
Median type								None			None	
Median storage veh)												
Upstream signal (ft)												
pX, platoon unblocked												
vC, conflicting volume	913	2685	0	2679	2673	895	0			2674		
vC1, stage 1 conf vol												
vC2, stage 2 conf vol												
vCu, unblocked vol	913	2685	0	2679	2673	895	0			2674		
tC, single (s)	7.5	6.5	6.9	7.5	6.5	6.9	4.1			4.1		
tC, 2 stage (s)												
tF (s)	3.5	4.0	3.3	3.5	4.0	3.3	2.2			2.2		
p0 queue free %	98	45	100	100	46	95	100			100		
cM capacity (veh/h)	124	21	1084	6	22	284	1622			153		

Direction, Lane #	EB 1	WB 1	NE 1	NE 2	NE 3
Volume Total	14	25	668	1325	686
Volume Left	2	0	5	0	0
Volume Right	0	13	0	0	24
cSH	25	42	1622	1700	1700
Volume to Capacity	0.57	0.59	0.00	0.78	0.40
Queue Length 95th (ft)	43	54	0	0	0
Control Delay (s)	271.0	174.3	0.1	0.0	0.0
Lane LOS	F	F	A		
Approach Delay (s)	271.0	174.3	0.0		
Approach LOS	F	F			

Intersection Summary			
Average Delay	3.0		
Intersection Capacity Utilization	58.2%	ICU Level of Service	B
Analysis Period (min)	15		

Movement	EBL	EBR	NBL	NBT	SBT	SBR
Lane Configurations						
Volume (veh/h)	2	0	2	267	74	2
Sign Control	Stop			Free	Free	
Grade	0%			0%	0%	
Peak Hour Factor	0.92	0.92	0.92	0.92	0.92	0.92
Hourly flow rate (vph)	2	0	2	290	80	2
Pedestrians						
Lane Width (ft)						
Walking Speed (ft/s)						
Percent Blockage						
Right turn flare (veh)						
Median type				None	None	
Median storage veh)						
Upstream signal (ft)						
pX, platoon unblocked						
vC, conflicting volume	376	82	83			
vC1, stage 1 conf vol						
vC2, stage 2 conf vol						
vCu, unblocked vol	376	82	83			
tC, single (s)	6.4	6.2	4.1			
tC, 2 stage (s)						
tF (s)	3.5	3.3	2.2			
p0 queue free %	100	100	100			
cM capacity (veh/h)	624	978	1515			

Direction, Lane #	EB 1	NB 1	SB 1
Volume Total	2	292	83
Volume Left	2	2	0
Volume Right	0	0	2
cSH	624	1515	1700
Volume to Capacity	0.00	0.00	0.05
Queue Length 95th (ft)	0	0	0
Control Delay (s)	10.8	0.1	0.0
Lane LOS	B	A	
Approach Delay (s)	10.8	0.1	0.0
Approach LOS	B		

Intersection Summary			
Average Delay	0.1		
Intersection Capacity Utilization	25.6%	ICU Level of Service	A
Analysis Period (min)	15		

Movement	EBL	EBR	NBL	NBT	SBT	SBR
Lane Configurations						
Volume (veh/h)	2	1	1	275	76	1
Sign Control	Stop			Free	Free	
Grade	0%			0%	0%	
Peak Hour Factor	0.92	0.92	0.92	0.92	0.92	0.92
Hourly flow rate (vph)	2	1	1	299	83	1
Pedestrians						
Lane Width (ft)						
Walking Speed (ft/s)						
Percent Blockage						
Right turn flare (veh)						
Median type				None	None	
Median storage veh)						
Upstream signal (ft)						
pX, platoon unblocked						
vC, conflicting volume	384	83	84			
vC1, stage 1 conf vol						
vC2, stage 2 conf vol						
vCu, unblocked vol	384	83	84			
tC, single (s)	6.4	6.2	4.1			
tC, 2 stage (s)						
tF (s)	3.5	3.3	2.2			
p0 queue free %	100	100	100			
cM capacity (veh/h)	618	976	1513			

Direction, Lane #	EB 1	NB 1	SB 1
Volume Total	3	300	84
Volume Left	2	1	0
Volume Right	1	0	1
cSH	704	1513	1700
Volume to Capacity	0.00	0.00	0.05
Queue Length 95th (ft)	0	0	0
Control Delay (s)	10.1	0.0	0.0
Lane LOS	B	A	
Approach Delay (s)	10.1	0.0	0.0
Approach LOS	B		

Intersection Summary			
Average Delay	0.1		
Intersection Capacity Utilization	25.3%	ICU Level of Service	A
Analysis Period (min)	15		

Movement	EBL	EBR	NBL	NBT	SBT	SBR
Lane Configurations						
Volume (veh/h)	16	3	0	271	74	4
Sign Control	Stop			Free	Free	
Grade	0%			0%	0%	
Peak Hour Factor	0.92	0.92	0.92	0.92	0.92	0.92
Hourly flow rate (vph)	17	3	0	295	80	4
Pedestrians						
Lane Width (ft)						
Walking Speed (ft/s)						
Percent Blockage						
Right turn flare (veh)						
Median type				None	None	
Median storage veh)						
Upstream signal (ft)						
pX, platoon unblocked						
vC, conflicting volume	377	83	85			
vC1, stage 1 conf vol						
vC2, stage 2 conf vol						
vCu, unblocked vol	377	83	85			
tC, single (s)	6.4	6.2	4.1			
tC, 2 stage (s)						
tF (s)	3.5	3.3	2.2			
p0 queue free %	97	100	100			
cM capacity (veh/h)	624	977	1512			

Direction, Lane #	EB 1	NB 1	SB 1
Volume Total	21	295	85
Volume Left	17	0	0
Volume Right	3	0	4
cSH	662	1512	1700
Volume to Capacity	0.03	0.00	0.05
Queue Length 95th (ft)	2	0	0
Control Delay (s)	10.6	0.0	0.0
Lane LOS	B		
Approach Delay (s)	10.6	0.0	0.0
Approach LOS	B		

Intersection Summary			
Average Delay	0.5		
Intersection Capacity Utilization	24.3%	ICU Level of Service	A
Analysis Period (min)	15		

Movement	EBL	EBR	NBL	NBT	SBT	SBR
Lane Configurations						
Volume (veh/h)	24	20	14	249	48	6
Sign Control	Stop			Free	Free	
Grade	0%			0%	0%	
Peak Hour Factor	0.92	0.92	0.92	0.92	0.92	0.92
Hourly flow rate (vph)	26	22	15	271	52	7
Pedestrians						
Lane Width (ft)						
Walking Speed (ft/s)						
Percent Blockage						
Right turn flare (veh)						
Median type				None	None	
Median storage veh)						
Upstream signal (ft)						
pX, platoon unblocked						
vC, conflicting volume	357	55	59			
vC1, stage 1 conf vol						
vC2, stage 2 conf vol						
vCu, unblocked vol	357	55	59			
tC, single (s)	6.4	6.2	4.1			
tC, 2 stage (s)						
tF (s)	3.5	3.3	2.2			
p0 queue free %	96	98	99			
cM capacity (veh/h)	635	1011	1545			

Direction, Lane #	EB 1	NB 1	SB 1
Volume Total	48	286	59
Volume Left	26	15	0
Volume Right	22	0	7
cSH	765	1545	1700
Volume to Capacity	0.06	0.01	0.03
Queue Length 95th (ft)	5	1	0
Control Delay (s)	10.0	0.5	0.0
Lane LOS	B	A	
Approach Delay (s)	10.0	0.5	0.0
Approach LOS	B		

Intersection Summary			
Average Delay	1.6		
Intersection Capacity Utilization	30.5%	ICU Level of Service	A
Analysis Period (min)	15		

Movement	EBL	EBT	EBR	WBL	WBT	WBR	NBL	NBT	NBR	SBL	SBT	SBR
Lane Configurations												
Sign Control		Stop			Stop			Stop			Stop	
Volume (vph)	4	111	26	27	94	1	20	212	11	1	1	1
Peak Hour Factor	0.92	0.92	0.92	0.92	0.92	0.92	0.92	0.92	0.92	0.92	0.92	0.92
Hourly flow rate (vph)	4	121	28	29	102	1	22	230	12	1	1	1

Direction, Lane #	EB 1	WB 1	NB 1	SB 1
Volume Total (vph)	153	133	264	3
Volume Left (vph)	4	29	22	1
Volume Right (vph)	28	1	12	1
Hadj (s)	-0.07	0.07	0.02	-0.10
Departure Headway (s)	4.7	4.8	4.6	4.8
Degree Utilization, x	0.20	0.18	0.34	0.00
Capacity (veh/h)	719	697	742	671
Control Delay (s)	8.8	8.9	10.0	7.9
Approach Delay (s)	8.8	8.9	10.0	7.9
Approach LOS	A	A	A	A

Intersection Summary			
Delay	9.4		
HCM Level of Service	A		
Intersection Capacity Utilization	37.6%	ICU Level of Service	A
Analysis Period (min)	15		

HCM Unsignalized Intersection Capacity Analysis
1: SW 97th Ave. & SW 174th St.

2/11/2015

Movement	EBL	EBT	EBR	WBL	WBT	WBR	NBL	NBT	NBR	SBL	SBT	SBR
Lane Configurations												
Sign Control		Stop			Stop			Stop			Stop	
Volume (vph)	3	121	32	28	105	2	23	7	12	2	3	4
Peak Hour Factor	0.84	0.84	0.84	0.84	0.84	0.84	0.84	0.84	0.84	0.84	0.84	0.84
Hourly flow rate (vph)	4	144	38	33	125	2	27	8	14	2	4	5

Direction, Lane #	EB 1	WB 1	NB 1	SB 1
Volume Total (vph)	186	161	50	11
Volume Left (vph)	4	33	27	2
Volume Right (vph)	38	2	14	5
Hadj (s)	-0.09	0.07	-0.03	-0.19
Departure Headway (s)	4.1	4.3	4.6	4.5
Degree Utilization, x	0.21	0.19	0.06	0.01
Capacity (veh/h)	852	819	718	722
Control Delay (s)	8.2	8.3	8.0	7.6
Approach Delay (s)	8.2	8.3	8.0	7.6
Approach LOS	A	A	A	A

Intersection Summary			
Delay	8.2		
HCM Level of Service	A		
Intersection Capacity Utilization	30.8%	ICU Level of Service	A
Analysis Period (min)	15		

Lane Group	EBL	NBT	SBT	NET
Lane Group Flow (vph)	131	143	22	2233
v/c Ratio	0.68	0.43	0.10	0.69
Control Delay	74.5	16.4	53.9	17.9
Queue Delay	0.0	0.0	0.0	0.0
Total Delay	74.5	16.4	53.9	17.9
Queue Length 50th (ft)	111	12	17	437
Queue Length 95th (ft)	181	80	46	551
Internal Link Dist (ft)	257	1041	665	1300
Turn Bay Length (ft)				
Base Capacity (vph)	265	329	227	3222
Starvation Cap Reductn	0	0	0	0
Spillback Cap Reductn	0	0	0	0
Storage Cap Reductn	0	0	0	0
Reduced v/c Ratio	0.49	0.43	0.10	0.69

Intersection Summary

Movement	EBL	EBR	NBL	NBT	NBR	SBT	SBR	NEL2	NEL	NET	NER
Lane Configurations											
Volume (vph)	2	123	4	11	121	7	14	4	5	2086	27
Ideal Flow (vphpl)	1900	1900	1900	1900	1900	1900	1900	1900	1900	1900	1900
Total Lost time (s)	5.0			5.0		5.0				5.0	
Lane Util. Factor	1.00			1.00		1.00				0.91	
Frt	0.87			0.88		0.91				1.00	
Flt Protected	1.00			1.00		1.00				1.00	
Satd. Flow (prot)	1614			1637		1691				5075	
Flt Permitted	1.00			0.99		1.00				1.00	
Satd. Flow (perm)	1614			1630		1691				5075	
Peak-hour factor, PHF	0.95	0.95	0.95	0.95	0.95	0.95	0.95	0.95	0.95	0.95	0.95
Adj. Flow (vph)	2	129	4	12	127	7	15	4	5	2196	28
RTOR Reduction (vph)	0	0	0	110	0	0	0	0	0	1	0
Lane Group Flow (vph)	131	0	0	33	0	22	0	0	0	2232	0
Turn Type	NA		Perm	NA		NA		Perm	Perm	NA	
Protected Phases	3			4		8				6	
Permitted Phases			4					6	6		
Actuated Green, G (s)	15.9			18.0		18.0				85.1	
Effective Green, g (s)	15.9			18.0		18.0				85.1	
Actuated g/C Ratio	0.12			0.13		0.13				0.64	
Clearance Time (s)	5.0			5.0		5.0				5.0	
Vehicle Extension (s)	3.0			3.0		3.0				3.0	
Lane Grp Cap (vph)	192			219		227				3223	
v/s Ratio Prot	c0.08					0.01					
v/s Ratio Perm				c0.02						0.44	
v/c Ratio	0.68			0.15		0.10				0.69	
Uniform Delay, d1	56.6			51.2		50.9				15.9	
Progression Factor	1.00			1.00		1.00				1.00	
Incremental Delay, d2	9.6			1.5		0.8				1.2	
Delay (s)	66.2			52.7		51.7				17.2	
Level of Service	E			D		D				B	
Approach Delay (s)	66.2			52.7		51.7				17.2	
Approach LOS	E			D		D				B	

Intersection Summary			
HCM Average Control Delay	22.0	HCM Level of Service	C
HCM Volume to Capacity ratio	0.61		
Actuated Cycle Length (s)	134.0	Sum of lost time (s)	15.0
Intersection Capacity Utilization	73.1%	ICU Level of Service	D
Analysis Period (min)	15		
c Critical Lane Group			

Movement	EBL	EBR	NBL	NBT	SBT	SBR
Lane Configurations						
Volume (veh/h)	6	34	30	140	74	5
Sign Control	Stop			Free	Free	
Grade	0%			0%	0%	
Peak Hour Factor	0.93	0.93	0.93	0.93	0.93	0.93
Hourly flow rate (vph)	6	37	32	151	80	5
Pedestrians						
Lane Width (ft)						
Walking Speed (ft/s)						
Percent Blockage						
Right turn flare (veh)						
Median type				None	None	
Median storage veh)						
Upstream signal (ft)					1121	
pX, platoon unblocked						
vC, conflicting volume	297	82	85			
vC1, stage 1 conf vol						
vC2, stage 2 conf vol						
vCu, unblocked vol	297	82	85			
tC, single (s)	6.4	6.2	4.1			
tC, 2 stage (s)						
tF (s)	3.5	3.3	2.2			
p0 queue free %	99	96	98			
cM capacity (veh/h)	679	977	1512			

Direction, Lane #	EB 1	NB 1	SB 1
Volume Total	43	183	85
Volume Left	6	32	0
Volume Right	37	0	5
cSH	917	1512	1700
Volume to Capacity	0.05	0.02	0.05
Queue Length 95th (ft)	4	2	0
Control Delay (s)	9.1	1.5	0.0
Lane LOS	A	A	
Approach Delay (s)	9.1	1.5	0.0
Approach LOS	A		

Intersection Summary			
Average Delay	2.1		
Intersection Capacity Utilization	25.7%	ICU Level of Service	A
Analysis Period (min)	15		

Movement	WBL	WBR	NBT	NBR	SBL	SBT
Lane Configurations						
Volume (veh/h)	20	17	142	6	12	72
Sign Control	Stop		Free			Free
Grade	0%		0%			0%
Peak Hour Factor	0.97	0.97	0.97	0.97	0.97	0.97
Hourly flow rate (vph)	21	18	146	6	12	74
Pedestrians						
Lane Width (ft)						
Walking Speed (ft/s)						
Percent Blockage						
Right turn flare (veh)						
Median type			None			None
Median storage veh)						
Upstream signal (ft)						
pX, platoon unblocked						
vC, conflicting volume	248	149			153	
vC1, stage 1 conf vol						
vC2, stage 2 conf vol						
vCu, unblocked vol	248	149			153	
tC, single (s)	6.4	6.2			4.1	
tC, 2 stage (s)						
tF (s)	3.5	3.3			2.2	
p0 queue free %	97	98			99	
cM capacity (veh/h)	734	897			1428	

Direction, Lane #	WB 1	NB 1	SB 1
Volume Total	38	153	87
Volume Left	21	0	12
Volume Right	18	6	0
cSH	801	1700	1428
Volume to Capacity	0.05	0.09	0.01
Queue Length 95th (ft)	4	0	1
Control Delay (s)	9.7	0.0	1.1
Lane LOS	A		A
Approach Delay (s)	9.7	0.0	1.1
Approach LOS	A		

Intersection Summary			
Average Delay	1.7		
Intersection Capacity Utilization	24.0%	ICU Level of Service	A
Analysis Period (min)	15		

Movement	EBL	EBR	NBL	NBT	SBT	SBR
Lane Configurations						
Volume (veh/h)	10	24	6	154	88	2
Sign Control	Stop			Free	Free	
Grade	0%			0%	0%	
Peak Hour Factor	0.94	0.94	0.94	0.94	0.94	0.94
Hourly flow rate (vph)	11	26	6	164	94	2
Pedestrians						
Lane Width (ft)						
Walking Speed (ft/s)						
Percent Blockage						
Right turn flare (veh)						
Median type				None	None	
Median storage veh)						
Upstream signal (ft)				1230		
pX, platoon unblocked						
vC, conflicting volume	271	95	96			
vC1, stage 1 conf vol						
vC2, stage 2 conf vol						
vCu, unblocked vol	271	95	96			
tC, single (s)	6.4	6.2	4.1			
tC, 2 stage (s)						
tF (s)	3.5	3.3	2.2			
p0 queue free %	99	97	100			
cM capacity (veh/h)	715	962	1498			

Direction, Lane #	EB 1	NB 1	SB 1
Volume Total	36	170	96
Volume Left	11	6	0
Volume Right	26	0	2
cSH	873	1498	1700
Volume to Capacity	0.04	0.00	0.06
Queue Length 95th (ft)	3	0	0
Control Delay (s)	9.3	0.3	0.0
Lane LOS	A	A	
Approach Delay (s)	9.3	0.3	0.0
Approach LOS	A		

Intersection Summary			
Average Delay	1.3		
Intersection Capacity Utilization	23.0%	ICU Level of Service	A
Analysis Period (min)	15		

Movement	EBL	EBT	EBR	WBL	WBT	WBR	NBL	NBT	NBR	SBL	SBT	SBR
Lane Configurations												
Volume (veh/h)	1	0	6	2	2	1	2	161	5	1	102	6
Sign Control		Stop			Stop			Free			Free	
Grade		0%			0%			0%			0%	
Peak Hour Factor	0.92	0.92	0.92	0.92	0.92	0.92	0.92	0.92	0.92	0.92	0.92	0.92
Hourly flow rate (vph)	1	0	7	2	2	1	2	175	5	1	111	7
Pedestrians												
Lane Width (ft)												
Walking Speed (ft/s)												
Percent Blockage												
Right turn flare (veh)												
Median type								None			None	
Median storage veh)												
Upstream signal (ft)								904				
pX, platoon unblocked												
vC, conflicting volume	301	301	114	305	302	178	117			180		
vC1, stage 1 conf vol												
vC2, stage 2 conf vol												
vCu, unblocked vol	301	301	114	305	302	178	117			180		
tC, single (s)	7.1	6.5	6.2	7.1	6.5	6.2	4.1			4.1		
tC, 2 stage (s)												
tF (s)	3.5	4.0	3.3	3.5	4.0	3.3	2.2			2.2		
p0 queue free %	100	100	99	100	100	100	100			100		
cM capacity (veh/h)	648	610	938	642	610	865	1471			1395		

Direction, Lane #	EB 1	WB 1	NB 1	SB 1
Volume Total	8	5	183	118
Volume Left	1	2	2	1
Volume Right	7	1	5	7
cSH	882	662	1471	1395
Volume to Capacity	0.01	0.01	0.00	0.00
Queue Length 95th (ft)	1	1	0	0
Control Delay (s)	9.1	10.5	0.1	0.1
Lane LOS	A	B	A	A
Approach Delay (s)	9.1	10.5	0.1	0.1
Approach LOS	A	B		

Intersection Summary			
Average Delay	0.5		
Intersection Capacity Utilization	20.0%	ICU Level of Service	A
Analysis Period (min)	15		

Movement	EBL	EBT	EBR	WBL	WBT	WBR	NBL	NBT	NBR	SBL	SBT	SBR
Lane Configurations												
Volume (veh/h)	0	0	2	0	1	1	2	165	1	0	112	2
Sign Control		Stop			Stop			Free			Free	
Grade		0%			0%			0%			0%	
Peak Hour Factor	0.95	0.95	0.95	0.95	0.95	0.95	0.95	0.95	0.95	0.95	0.95	0.95
Hourly flow rate (vph)	0	0	2	0	1	1	2	174	1	0	118	2
Pedestrians												
Lane Width (ft)												
Walking Speed (ft/s)												
Percent Blockage												
Right turn flare (veh)												
Median type								None			None	
Median storage veh)												
Upstream signal (ft)								601				
pX, platoon unblocked												
vC, conflicting volume	299	298	119	299	298	174	120			175		
vC1, stage 1 conf vol												
vC2, stage 2 conf vol												
vCu, unblocked vol	299	298	119	299	298	174	120			175		
tC, single (s)	7.1	6.5	6.2	7.1	6.5	6.2	4.1			4.1		
tC, 2 stage (s)												
tF (s)	3.5	4.0	3.3	3.5	4.0	3.3	2.2			2.2		
p0 queue free %	100	100	100	100	100	100	100			100		
cM capacity (veh/h)	651	613	933	651	613	869	1468			1402		

Direction, Lane #	EB 1	WB 1	NB 1	SB 1
Volume Total	2	2	177	120
Volume Left	0	0	2	0
Volume Right	2	1	1	2
cSH	933	719	1468	1402
Volume to Capacity	0.00	0.00	0.00	0.00
Queue Length 95th (ft)	0	0	0	0
Control Delay (s)	8.9	10.0	0.1	0.0
Lane LOS	A	B	A	
Approach Delay (s)	8.9	10.0	0.1	0.0
Approach LOS	A	B		

Intersection Summary			
Average Delay	0.2		
Intersection Capacity Utilization	20.3%	ICU Level of Service	A
Analysis Period (min)	15		

Movement	EBL	EBT	EBR	WBL	WBT	WBR	NBL	NBT	NBR	SBL	SBT	SBR
Lane Configurations												
Volume (veh/h)	4	0	22	1	1	1	5	163	2	0	112	1
Sign Control		Stop			Stop			Free			Free	
Grade		0%			0%			0%			0%	
Peak Hour Factor	0.97	0.97	0.97	0.97	0.97	0.97	0.97	0.97	0.97	0.97	0.97	0.97
Hourly flow rate (vph)	4	0	23	1	1	1	5	168	2	0	115	1
Pedestrians												
Lane Width (ft)												
Walking Speed (ft/s)												
Percent Blockage												
Right turn flare (veh)												
Median type								None			None	
Median storage veh)												
Upstream signal (ft)								300				
pX, platoon unblocked	0.97	0.97		0.97	0.97	0.97				0.97		
vC, conflicting volume	297	296	116	318	296	169	116			170		
vC1, stage 1 conf vol												
vC2, stage 2 conf vol												
vCu, unblocked vol	257	256	116	279	256	125	116			126		
tC, single (s)	7.1	6.5	6.2	7.1	6.5	6.2	4.1			4.1		
tC, 2 stage (s)												
tF (s)	3.5	4.0	3.3	3.5	4.0	3.3	2.2			2.2		
p0 queue free %	99	100	98	100	100	100	100			100		
cM capacity (veh/h)	670	625	936	634	625	896	1472			1414		

Direction, Lane #	EB 1	WB 1	NB 1	SB 1
Volume Total	27	3	175	116
Volume Left	4	1	5	0
Volume Right	23	1	2	1
cSH	882	699	1472	1414
Volume to Capacity	0.03	0.00	0.00	0.00
Queue Length 95th (ft)	2	0	0	0
Control Delay (s)	9.2	10.2	0.2	0.0
Lane LOS	A	B	A	
Approach Delay (s)	9.2	10.2	0.2	0.0
Approach LOS	A	B		

Intersection Summary			
Average Delay	1.0		
Intersection Capacity Utilization	22.7%	ICU Level of Service	A
Analysis Period (min)	15		

Lane Group	EBL	EBT	EBR	WBL	WBT	NBL	NBT	SBL	SBT
Lane Group Flow (vph)	71	388	62	186	455	129	296	12	136
v/c Ratio	0.12	0.68	0.15	0.32	0.37	0.27	0.37	0.04	0.28
Control Delay	9.4	30.6	8.4	11.2	22.5	24.4	17.9	23.3	28.5
Queue Delay	0.0	0.0	0.0	0.0	0.0	0.0	0.0	0.0	0.0
Total Delay	9.4	30.6	8.4	11.2	22.5	24.4	17.9	23.3	28.5
Queue Length 50th (ft)	15	142	0	42	95	49	35	4	25
Queue Length 95th (ft)	39	267	31	91	161	110	82	19	60
Internal Link Dist (ft)		1915			531		229		156
Turn Bay Length (ft)	130			95		155		130	
Base Capacity (vph)	663	837	635	601	1739	464	1124	344	836
Starvation Cap Reductn	0	0	0	0	0	0	0	0	0
Spillback Cap Reductn	0	0	0	0	0	0	0	0	0
Storage Cap Reductn	0	0	0	0	0	0	0	0	0
Reduced v/c Ratio	0.11	0.46	0.10	0.31	0.26	0.28	0.26	0.03	0.16

Intersection Summary

Movement	EBL	EBT	EBR	WBL	WBT	WBR	NBL	NBT	NBR	SBL	SBT	SBR
Lane Configurations												
Volume (vph)	65	353	56	169	396	18	117	138	131	11	89	35
Ideal Flow (vphpl)	1900	1900	1900	1900	1900	1900	1900	1900	1900	1900	1900	1900
Total Lost time (s)	3.0	3.0	5.0	3.0	3.0		3.0	3.0		3.0	3.0	
Lane Util. Factor	1.00	1.00	1.00	1.00	0.95		1.00	0.95		1.00	0.95	
Frt	1.00	1.00	0.85	1.00	0.99		1.00	0.93		1.00	0.96	
Flt Protected	0.95	1.00	1.00	0.95	1.00		0.95	1.00		0.95	1.00	
Satd. Flow (prot)	1770	1863	1583	1770	3516		1770	3281		1770	3391	
Flt Permitted	0.49	1.00	1.00	0.53	1.00		0.67	1.00		0.57	1.00	
Satd. Flow (perm)	912	1863	1583	992	3516		1240	3281		1064	3391	
Peak-hour factor, PHF	0.91	0.91	0.91	0.91	0.91	0.91	0.91	0.91	0.91	0.91	0.91	0.91
Adj. Flow (vph)	71	388	62	186	435	20	129	152	144	12	98	38
RTOR Reduction (vph)	0	0	48	0	3	0	0	123	0	0	33	0
Lane Group Flow (vph)	71	388	14	186	452	0	129	173	0	12	103	0
Turn Type	custom	NA	custom	custom	NA		custom	NA		custom	NA	
Protected Phases	1 2	2 4		1 3	3 4		5 6	6 8		5 7	7 8	
Permitted Phases	4		4	4			8			8		
Actuated Green, G (s)	37.8	24.9	20.6	35.6	28.7		24.3	13.4		17.0	12.1	
Effective Green, g (s)	37.8	24.9	20.6	35.6	28.7		24.3	13.4		17.0	12.1	
Actuated g/C Ratio	0.42	0.28	0.23	0.40	0.32		0.27	0.15		0.19	0.13	
Clearance Time (s)			5.0									
Vehicle Extension (s)			3.0									
Lane Grp Cap (vph)	547	515	362	522	1121		429	489		269	456	
v/s Ratio Prot	0.02	c0.21		c0.06	c0.13		c0.05	c0.05		0.00	c0.03	
v/s Ratio Perm	0.03		0.01	0.08			0.03			0.00		
v/c Ratio	0.13	0.75	0.04	0.36	0.40		0.30	0.35		0.04	0.23	
Uniform Delay, d1	15.8	29.7	27.0	18.4	24.0		25.9	34.4		29.8	34.8	
Progression Factor	1.00	1.00	1.00	1.00	1.00		1.00	1.00		1.00	1.00	
Incremental Delay, d2	0.1	6.2	0.0	0.4	0.2		0.4	0.4		0.1	0.3	
Delay (s)	15.9	35.9	27.0	18.8	24.2		26.3	34.9		29.9	35.0	
Level of Service	B	D	C	B	C		C	C		C	D	
Approach Delay (s)		32.1			22.6			32.2			34.6	
Approach LOS		C			C			C			C	

Intersection Summary			
HCM Average Control Delay	28.9	HCM Level of Service	C
HCM Volume to Capacity ratio	0.47		
Actuated Cycle Length (s)	90.0	Sum of lost time (s)	21.0
Intersection Capacity Utilization	53.5%	ICU Level of Service	A
Analysis Period (min)	15		
c Critical Lane Group			

Movement	EBL	EBT	WBT	WBR	SBL	SBR
Lane Configurations						
Volume (veh/h)	134	427	506	8	17	90
Sign Control		Free	Free		Stop	
Grade		0%	0%		0%	
Peak Hour Factor	0.94	0.94	0.94	0.94	0.94	0.94
Hourly flow rate (vph)	143	454	538	9	18	96
Pedestrians						
Lane Width (ft)						
Walking Speed (ft/s)						
Percent Blockage						
Right turn flare (veh)						
Median type		None	None			
Median storage veh)						
Upstream signal (ft)		611				
pX, platoon unblocked					0.86	
vC, conflicting volume	547				1282	543
vC1, stage 1 conf vol						
vC2, stage 2 conf vol						
vCu, unblocked vol	547				1246	543
tC, single (s)	4.1				6.4	6.2
tC, 2 stage (s)						
tF (s)	2.2				3.5	3.3
p0 queue free %	86				87	82
cM capacity (veh/h)	1023				142	540

Direction, Lane #	EB 1	EB 2	WB 1	SB 1
Volume Total	143	454	547	114
Volume Left	143	0	0	18
Volume Right	0	0	9	96
cSH	1023	1700	1700	373
Volume to Capacity	0.14	0.27	0.32	0.30
Queue Length 95th (ft)	12	0	0	32
Control Delay (s)	9.1	0.0	0.0	18.8
Lane LOS	A			C
Approach Delay (s)	2.2		0.0	18.8
Approach LOS				C

Intersection Summary			
Average Delay	2.7		
Intersection Capacity Utilization	51.0%	ICU Level of Service	A
Analysis Period (min)	15		

Lane Group	EBL	EBT	WBL	WBT	NBL	NBT	SBL	SBT
Lane Group Flow (vph)	288	446	250	513	130	1712	199	1988
v/c Ratio	0.88	0.69	0.85	0.84	0.75	0.85	0.84	0.91
Control Delay	81.7	54.1	79.7	66.8	52.9	42.8	61.6	43.4
Queue Delay	0.0	0.0	0.0	0.0	0.0	0.0	0.0	0.0
Total Delay	81.7	54.1	79.7	66.8	52.9	42.8	61.6	43.4
Queue Length 50th (ft)	256	186	241	246	64	531	125	623
Queue Length 95th (ft)	#409	247	#392	317	#172	599	#256	#702
Internal Link Dist (ft)		364		1915		469		768
Turn Bay Length (ft)			286		160		130	
Base Capacity (vph)	357	710	325	674	177	2006	254	2213
Starvation Cap Reductn	0	0	0	0	0	0	0	0
Spillback Cap Reductn	0	0	0	0	0	0	0	0
Storage Cap Reductn	0	0	0	0	0	0	0	0
Reduced v/c Ratio	0.81	0.63	0.77	0.76	0.73	0.85	0.78	0.90

Intersection Summary

95th percentile volume exceeds capacity, queue may be longer.
Queue shown is maximum after two cycles.

Movement	EBL	EBT	EBR	WBL	WBT	WBR	NBL	NBT	NBR	SBL	SBT	SBR
Lane Configurations												
Volume (vph)	271	314	105	340	360	17	122	1489	120	187	1651	218
Ideal Flow (vphpl)	1900	1900	1900	1900	1900	1900	1900	1900	1900	1900	1900	1900
Total Lost time (s)	5.0	5.0		5.0	5.0		3.0	5.0		3.0	5.0	
Lane Util. Factor	1.00	0.95		0.91	0.91		1.00	0.91		1.00	0.91	
Frt	1.00	0.96		1.00	0.99		1.00	0.99		1.00	0.98	
Flt Protected	0.95	1.00		0.95	0.99		0.95	1.00		0.95	1.00	
Satd. Flow (prot)	1770	3406		1610	3336		1770	5028		1770	4996	
Flt Permitted	0.95	1.00		0.95	0.99		0.07	1.00		0.07	1.00	
Satd. Flow (perm)	1770	3406		1610	3336		139	5028		132	4996	
Peak-hour factor, PHF	0.94	0.94	0.94	0.94	0.94	0.94	0.94	0.94	0.94	0.94	0.94	0.94
Adj. Flow (vph)	288	334	112	362	383	18	130	1584	128	199	1756	232
RTOR Reduction (vph)	0	24	0	0	2	0	0	7	0	0	12	0
Lane Group Flow (vph)	288	422	0	250	511	0	130	1705	0	199	1976	0
Turn Type	Split	NA		Split	NA		pm+pt	NA		pm+pt	NA	
Protected Phases	4	4		8	8		5	2		1	6	
Permitted Phases							2			6		
Actuated Green, G (s)	24.8	24.8		24.5	24.5		62.3	53.5		70.2	58.4	
Effective Green, g (s)	24.8	24.8		24.5	24.5		62.3	53.5		70.2	58.4	
Actuated g/C Ratio	0.18	0.18		0.18	0.18		0.46	0.40		0.52	0.43	
Clearance Time (s)	5.0	5.0		5.0	5.0		3.0	5.0		3.0	5.0	
Vehicle Extension (s)	3.0	3.0		3.0	3.0		3.0	3.0		3.0	3.0	
Lane Grp Cap (vph)	326	628		293	608		171	2000		236	2169	
v/s Ratio Prot	c0.16	0.12		c0.16	0.15		0.05	0.34		c0.09	c0.40	
v/s Ratio Perm							0.30			0.35		
v/c Ratio	0.88	0.67		0.85	0.84		0.76	0.85		0.84	0.91	
Uniform Delay, d1	53.4	51.1		53.3	53.1		29.1	36.9		37.5	35.6	
Progression Factor	1.00	1.00		1.00	1.00		1.00	1.00		1.00	1.00	
Incremental Delay, d2	23.4	2.8		20.7	10.2		17.9	4.9		23.0	6.3	
Delay (s)	76.8	53.9		73.9	63.3		46.9	41.8		60.5	41.9	
Level of Service	E	D		E	E		D	D		E	D	
Approach Delay (s)		62.9			66.8			42.1			43.6	
Approach LOS		E			E			D			D	

Intersection Summary			
HCM Average Control Delay	48.9	HCM Level of Service	D
HCM Volume to Capacity ratio	0.87		
Actuated Cycle Length (s)	134.5	Sum of lost time (s)	13.0
Intersection Capacity Utilization	87.9%	ICU Level of Service	E
Analysis Period (min)	15		
c Critical Lane Group			

Movement	EBL	EBT	EBR	WBL	WBT	WBR	NBL	NBT	NBR	SBL	SBT	SBR
Lane Configurations												
Volume (vph)	271	314	105	340	360	17	122	1489	120	187	1651	218
Movement Number	7	4	14	3	8	18	5	2	12	1	6	16
Initial Queue, veh	0	0	0	0	0	0	0	0	0	0	0	0
Ped-Bike Adj. Factor (A_pbT)	1.00		1.00	1.00		1.00	1.00		1.00	1.00		1.00
Parking, Bus Adj. Factors	1.00	1.00	1.00	1.00	1.00	1.00	1.00	1.00	1.00	1.00	1.00	1.00
Adj. Sat. Flow Rate, veh/h/ln	1863	1863	1863	1863	1863	1863	1863	1863	1863	1863	1863	1863
Lanes	1	2	0	1	2	0	1	3	0	1	3	0
Lane Assignment												
Capacity, veh/h	322	488	160	357	710	33	169	1940	156	225	1938	255
Proportion Arriving On Green	0.18	0.18	0.18	0.20	0.20	0.20	0.06	0.40	0.40	0.08	0.43	0.43
Movement Delay, s/veh	76.3	55.6	56.9	104.7	49.6	49.7	47.8	41.0	45.5	52.9	44.0	50.9
Movement LOS	E	E	E	F	D	D	D	D	D	D	D	D
Approach Volume, veh/h		734			763			1841			2187	
Approach Delay, s/veh		64.1			75.7			42.9			46.9	
Approach LOS		E			E			D			D	

Timer:	1	2	3	4	5	6	7	8
Assigned Phase	1	2	8	4	5	6		
Case No	1.1	4.0	10.0	10.0	1.1	4.0		
Phase Duration (G+Y+Rc), s	13.61	59.26	32.00	29.36	10.69	62.18		
Change Period (Y+Rc), s	3.00	5.00	5.00	5.00	3.00	5.00		
Max. Allowable Headway (MAH), s	4.00	3.94	3.96	3.99	4.00	3.94		
Maximum Green Setting (Gmax), s	15.00	53.00	27.00	27.00	9.00	59.00		
Max. Queue Clearance Time (g_c+I1), s	10.37	41.45	29.00	23.32	7.71	50.88		
Green Extension Time (g_e), s	0.24	10.16	0.00	1.04	0.04	6.30		
Probability of Phase Call (p_c)	0.999	1.000	1.000	1.000	0.992	1.000		
Probability of Max Out (p_x)	0.632	0.904	1.000	1.000	1.000	0.946		

Left-Turn Movement Data					
Assigned Movement	1		3	7	5
Mvmt. Sat Flow, veh/h	1774.04		1774.04	1774.04	1774.04

Through Movement Data					
Assigned Movement		2	8	4	6
Mvmt. Sat Flow, veh/h		4798.35	3529.95	2686.58	4550.04

Right-Turn Movement Data					
Assigned Movement		12	18	14	16
Mvmt. Sat Flow, veh/h		386.41	166.21	883.08	597.47

Left Lane Group Data								
Assigned Movement	1	0	3	7	5	0	0	0
Lane Assignment	L (Pr/Pm)		L	LL (Pr/Pm)				
Lanes in Group	1	0	1	1	1	0	0	0
Group Volume (v), veh/h	198.9	0.0	361.7	288.3	129.8	0.0	0.0	0.0
Group Sat. Flow (s), veh/h/ln	1774.0	0.0	1774.0	1774.0	1774.0	0.0	0.0	0.0
Queue Serve Time (g_s), s	8.4	0.0	27.0	21.3	5.7	0.0	0.0	0.0
Cycle Queue Clear Time (g_c), s	8.4	0.0	27.0	21.3	5.7	0.0	0.0	0.0

Perm LT Sat Flow Rate (s_l), veh/h/ln	284.0	0.0	1774.0	1774.0	216.9	0.0	0.0	0.0
Shared LT Sat Flow (s_sh), veh/h/ln	0.0	0.0	0.0	0.0	0.0	0.0	0.0	0.0
Perm LT Eff. Green (g_p), s	59.1	0.0	0.0	0.0	54.3	0.0	0.0	0.0
Perm LT Serve Time (g_u), s	14.8	0.0	0.0	0.0	8.3	0.0	0.0	0.0
Perm LT Que Serve Time (g_ps), s	14.8	0.0	0.0	0.0	8.3	0.0	0.0	0.0
Time to First Blk (g_f), s	0.0	0.0	0.0	0.0	0.0	0.0	0.0	0.0
Serve Time pre Blk (g_fs), s	0.0	0.0	0.0	0.0	0.0	0.0	0.0	0.0
Proportion LT Inside Lane (P_L)	1.000	0.000	1.000	1.000	1.000	0.000	0.000	0.000
Lane Group Capacity (c), veh/h	225.2	0.0	356.9	321.9	168.6	0.0	0.0	0.0
Volume-to-Capacity Ratio (X)	0.883	0.000	1.014	0.896	0.770	0.000	0.000	0.000
Available Capacity (c_a), veh/h	283.2	0.0	356.9	356.9	186.0	0.0	0.0	0.0
Upstream Filter Factor (I)	1.000	0.000	1.000	1.000	1.000	0.000	0.000	0.000
Uniform Delay (d1), s/veh	30.3	0.0	53.6	53.7	31.5	0.0	0.0	0.0
Incremental Delay (d2), s/veh	22.6	0.0	51.1	22.6	16.2	0.0	0.0	0.0
Initial Queue Delay (d3), s/veh	0.0	0.0	0.0	0.0	0.0	0.0	0.0	0.0
Control Delay (d), s/veh	52.9	0.0	104.7	76.3	47.8	0.0	0.0	0.0
First-Term Queue (Q1), veh/ln	3.5	0.0	12.0	9.5	2.4	0.0	0.0	0.0
Second-Term Queue (Q2), veh/ln	1.4	0.0	5.1	2.0	0.8	0.0	0.0	0.0
Third-Term Queue (Q3), veh/ln	0.0	0.0	0.0	0.0	0.0	0.0	0.0	0.0
Percentile bk-of-que factor (f_B%)	1.000	0.000	1.000	1.000	1.000	0.000	0.000	0.000
Percentile Back of Queue (Q%), veh/ln	4.9	0.0	17.1	11.5	3.2	0.0	0.0	0.0
Percentile Storage Ratio (RQ%)	0.96	0.00	1.52	0.85	0.50	0.00	0.00	0.00
Initial Queue (Qb), veh	0.0	0.0	0.0	0.0	0.0	0.0	0.0	0.0
Final (Residual) Queue (Qe), veh	0.0	0.0	1.2	0.0	0.0	0.0	0.0	0.0
Saturated Delay (ds), s/veh	0.0	0.0	0.0	0.0	0.0	0.0	0.0	0.0
Saturated Queue (Qs), veh	0.0	0.0	0.0	0.0	0.0	0.0	0.0	0.0
Saturated Capacity (cs), veh/h	0.0	0.0	0.0	0.0	0.0	0.0	0.0	0.0
Initial Queue Clear Time (tc), h	0.0	0.0	0.3	0.0	0.0	0.0	0.0	0.0
Middle Lane Group Data								
Assigned Movement	0	2	8	4	0	6	0	0
Lane Assignment		T	T	T		T		
Lanes in Group	0	2	1	1	0	2	0	0
Group Volume (v), veh/h	0.0	1118.8	201.6	229.8	0.0	1306.2	0.0	0.0
Group Sat. Flow (s), veh/h/ln	0.0	1695.1	1862.7	1862.7	0.0	1695.1	0.0	0.0
Queue Serve Time (g_s), s	0.0	39.4	13.0	15.5	0.0	48.3	0.0	0.0
Cycle Queue Clear Time (g_c), s	0.0	39.4	13.0	15.5	0.0	48.3	0.0	0.0
Lane Group Capacity (c), veh/h	0.0	1370.4	374.7	338.0	0.0	1444.3	0.0	0.0
Volume-to-Capacity Ratio (X)	0.000	0.816	0.538	0.680	0.000	0.904	0.000	0.000
Available Capacity (c_a), veh/h	0.0	1370.4	374.7	374.7	0.0	1490.2	0.0	0.0
Upstream Filter Factor (I)	0.000	1.000	1.000	1.000	0.000	1.000	0.000	0.000
Uniform Delay (d1), s/veh	0.0	35.6	48.0	51.3	0.0	36.0	0.0	0.0
Incremental Delay (d2), s/veh	0.0	5.5	1.5	4.3	0.0	8.0	0.0	0.0
Initial Queue Delay (d3), s/veh	0.0	0.0	0.0	0.0	0.0	0.0	0.0	0.0
Control Delay (d), s/veh	0.0	41.0	49.6	55.6	0.0	44.0	0.0	0.0
First-Term Queue (Q1), veh/ln	0.0	16.1	6.1	7.2	0.0	19.7	0.0	0.0
Second-Term Queue (Q2), veh/ln	0.0	1.0	0.2	0.4	0.0	1.6	0.0	0.0
Third-Term Queue (Q3), veh/ln	0.0	0.0	0.0	0.0	0.0	0.0	0.0	0.0
Percentile bk-of-que factor (f_B%)	0.000	1.000	1.000	1.000	0.000	1.000	0.000	0.000
Percentile Back of Queue (Q%), veh/ln	0.0	17.2	6.2	7.7	0.0	21.3	0.0	0.0
Percentile Storage Ratio (RQ%)	0.00	0.95	0.09	0.56	0.00	0.74	0.00	0.00

Initial Queue (Qb), veh	0.0	0.0	0.0	0.0	0.0	0.0	0.0	0.0
Final (Residual) Queue (Qe), veh	0.0	0.0	0.0	0.0	0.0	0.0	0.0	0.0
Saturated Delay (ds), s/veh	0.0	0.0	0.0	0.0	0.0	0.0	0.0	0.0
Saturated Queue (Qs), veh	0.0	0.0	0.0	0.0	0.0	0.0	0.0	0.0
Saturated Capacity (cs), veh/h	0.0	0.0	0.0	0.0	0.0	0.0	0.0	0.0
Initial Queue Clear Time (tc), h	0.0	0.0	0.0	0.0	0.0	0.0	0.0	0.0

Right Lane Group Data								
Assigned Movement	0	12	18	14	0	16	0	0
Lane Assignment		T+R	T+R	T+R		T+R		
Lanes in Group	0	1	1	1	0	1	0	0
Group Volume (v), veh/h	0.0	592.9	199.5	215.9	0.0	682.1	0.0	0.0
Group Sat. Flow (s), veh/h/ln	0.0	1794.6	1833.4	1706.9	0.0	1757.3	0.0	0.0
Queue Serve Time (g_s), s	0.0	39.5	13.1	15.9	0.0	48.9	0.0	0.0
Cycle Queue Clear Time (g_c), s	0.0	39.5	13.1	15.9	0.0	48.9	0.0	0.0
Prot RT Sat Flow Rate (s_R), veh/h/ln	0.0	0.0	0.0	0.0	0.0	0.0	0.0	0.0
Prot RT Eff. Green (g_R), s	0.0	0.0	0.0	0.0	0.0	0.0	0.0	0.0
Proportion RT Outside Lane (P_R)	0.000	0.215	0.091	0.517	0.000	0.340	0.000	0.000
Lane Group Capacity (c), veh/h	0.0	725.4	368.8	309.8	0.0	748.6	0.0	0.0
Volume-to-Capacity Ratio (X)	0.000	0.817	0.541	0.697	0.000	0.911	0.000	0.000
Available Capacity (c_a), veh/h	0.0	725.4	368.8	343.4	0.0	772.5	0.0	0.0
Upstream Filter Factor (I)	0.000	1.000	1.000	1.000	0.000	1.000	0.000	0.000
Uniform Delay (d1), s/veh	0.0	35.6	48.1	51.5	0.0	36.1	0.0	0.0
Incremental Delay (d2), s/veh	0.0	9.9	1.6	5.4	0.0	14.7	0.0	0.0
Initial Queue Delay (d3), s/veh	0.0	0.0	0.0	0.0	0.0	0.0	0.0	0.0
Control Delay (d), s/veh	0.0	45.5	49.7	56.9	0.0	50.9	0.0	0.0
First-Term Queue (Q1), veh/ln	0.0	17.1	6.0	6.8	0.0	20.6	0.0	0.0
Second-Term Queue (Q2), veh/ln	0.0	2.0	0.2	0.5	0.0	3.1	0.0	0.0
Third-Term Queue (Q3), veh/ln	0.0	0.0	0.0	0.0	0.0	0.0	0.0	0.0
Percentile bk-of-que factor (f_B%)	0.000	1.000	1.000	1.000	0.000	1.000	0.000	0.000
Percentile Back of Queue (Q%), veh/ln	0.0	19.1	6.2	7.3	0.0	23.7	0.0	0.0
Percentile Storage Ratio (RQ%)	0.00	1.06	0.08	0.54	0.00	0.82	0.00	0.00
Initial Queue (Qb), veh	0.0	0.0	0.0	0.0	0.0	0.0	0.0	0.0
Final (Residual) Queue (Qe), veh	0.0	0.0	0.0	0.0	0.0	0.0	0.0	0.0
Saturated Delay (ds), s/veh	0.0	0.0	0.0	0.0	0.0	0.0	0.0	0.0
Saturated Queue (Qs), veh	0.0	0.0	0.0	0.0	0.0	0.0	0.0	0.0
Saturated Capacity (cs), veh/h	0.0	0.0	0.0	0.0	0.0	0.0	0.0	0.0
Initial Queue Clear Time (tc), h	0.0	0.0	0.0	0.0	0.0	0.0	0.0	0.0

Intersection Summary	
HCM Average Control Delay	51.9
HCM Level of Service	D

Movement	EBL	EBT	EBR	WBL	WBT	WBR	NEL	NET	NER	SWL	SWT	SWR
Lane Configurations												
Volume (veh/h)	35	5	0	0	4	12	61	1978	20	0	0	0
Sign Control		Stop			Stop			Free			Free	
Grade		0%			0%			0%			0%	
Peak Hour Factor	0.95	0.95	0.95	0.95	0.95	0.95	0.95	0.95	0.95	0.95	0.95	0.95
Hourly flow rate (vph)	37	5	0	0	4	13	64	2082	21	0	0	0
Pedestrians												
Lane Width (ft)												
Walking Speed (ft/s)												
Percent Blockage												
Right turn flare (veh)												
Median type								None			None	
Median storage veh)												
Upstream signal (ft)												
pX, platoon unblocked												
vC, conflicting volume	837	2232	0	2224	2221	705	0			2103		
vC1, stage 1 conf vol												
vC2, stage 2 conf vol												
vCu, unblocked vol	837	2232	0	2224	2221	705	0			2103		
tC, single (s)	7.5	6.5	6.9	7.5	6.5	6.9	4.1			4.1		
tC, 2 stage (s)												
tF (s)	3.5	4.0	3.3	3.5	4.0	3.3	2.2			2.2		
p0 queue free %	84	87	100	100	90	97	96			100		
cM capacity (veh/h)	224	41	1084	21	41	379	1622			258		

Direction, Lane #	EB 1	WB 1	NE 1	NE 2	NE 3
Volume Total	42	17	585	1041	542
Volume Left	37	0	64	0	0
Volume Right	0	13	0	0	21
cSH	143	124	1622	1700	1700
Volume to Capacity	0.29	0.14	0.04	0.61	0.32
Queue Length 95th (ft)	29	11	3	0	0
Control Delay (s)	40.3	38.5	1.2	0.0	0.0
Lane LOS	E	E	A		
Approach Delay (s)	40.3	38.5	0.3		
Approach LOS	E	E			

Intersection Summary				
Average Delay	1.4			
Intersection Capacity Utilization	55.4%	ICU Level of Service	B	
Analysis Period (min)	15			

Movement	EBL	EBT	EBR	WBL	WBT	WBR	NEL	NET	NER	SWL	SWT	SWR
Lane Configurations												
Volume (veh/h)	0	4	0	0	4	0	2	2160	4	0	0	0
Sign Control		Stop			Stop			Free			Free	
Grade		0%			0%			0%			0%	
Peak Hour Factor	0.89	0.89	0.89	0.89	0.89	0.89	0.89	0.89	0.89	0.89	0.89	0.89
Hourly flow rate (vph)	0	4	0	0	4	0	2	2427	4	0	0	0
Pedestrians												
Lane Width (ft)												
Walking Speed (ft/s)												
Percent Blockage												
Right turn flare (veh)												
Median type								None			None	
Median storage veh)												
Upstream signal (ft)												
pX, platoon unblocked												
vC, conflicting volume	816	2436	0	2436	2434	811	0			2431		
vC1, stage 1 conf vol												
vC2, stage 2 conf vol												
vCu, unblocked vol	816	2436	0	2436	2434	811	0			2431		
tC, single (s)	7.5	6.5	6.9	7.5	6.5	6.9	4.1			4.1		
tC, 2 stage (s)												
tF (s)	3.5	4.0	3.3	3.5	4.0	3.3	2.2			2.2		
p0 queue free %	100	86	100	100	86	100	100			100		
cM capacity (veh/h)	239	31	1084	15	31	322	1622			191		

Direction, Lane #	EB 1	WB 1	NE 1	NE 2	NE 3
Volume Total	4	4	609	1213	611
Volume Left	0	0	2	0	0
Volume Right	0	0	0	0	4
cSH	31	31	1622	1700	1700
Volume to Capacity	0.14	0.14	0.00	0.71	0.36
Queue Length 95th (ft)	11	11	0	0	0
Control Delay (s)	139.0	138.5	0.0	0.0	0.0
Lane LOS	F	F	A		
Approach Delay (s)	139.0	138.5	0.0		
Approach LOS	F	F			

Intersection Summary			
Average Delay	0.5		
Intersection Capacity Utilization	51.9%	ICU Level of Service	A
Analysis Period (min)	15		

Movement	EBL	EBR	NBL	NBT	SBT	SBR
Lane Configurations						
Volume (veh/h)	1	2	1	163	113	0
Sign Control	Stop			Free	Free	
Grade	0%			0%	0%	
Peak Hour Factor	0.92	0.92	0.92	0.92	0.92	0.92
Hourly flow rate (vph)	1	2	1	177	123	0
Pedestrians						
Lane Width (ft)						
Walking Speed (ft/s)						
Percent Blockage						
Right turn flare (veh)						
Median type				None	None	
Median storage veh)						
Upstream signal (ft)						
pX, platoon unblocked						
vC, conflicting volume	302	123	123			
vC1, stage 1 conf vol						
vC2, stage 2 conf vol						
vCu, unblocked vol	302	123	123			
tC, single (s)	6.4	6.2	4.1			
tC, 2 stage (s)						
tF (s)	3.5	3.3	2.2			
p0 queue free %	100	100	100			
cM capacity (veh/h)	689	928	1464			

Direction, Lane #	EB 1	NB 1	SB 1
Volume Total	3	178	123
Volume Left	1	1	0
Volume Right	2	0	0
cSH	832	1464	1700
Volume to Capacity	0.00	0.00	0.07
Queue Length 95th (ft)	0	0	0
Control Delay (s)	9.3	0.1	0.0
Lane LOS	A	A	
Approach Delay (s)	9.3	0.1	0.0
Approach LOS	A		

Intersection Summary			
Average Delay	0.1		
Intersection Capacity Utilization	19.4%	ICU Level of Service	A
Analysis Period (min)	15		

Movement	EBL	EBR	NBL	NBT	SBT	SBR
Lane Configurations						
Volume (veh/h)	1	1	1	165	112	1
Sign Control	Stop			Free	Free	
Grade	0%			0%	0%	
Peak Hour Factor	0.92	0.92	0.92	0.92	0.92	0.92
Hourly flow rate (vph)	1	1	1	179	122	1
Pedestrians						
Lane Width (ft)						
Walking Speed (ft/s)						
Percent Blockage						
Right turn flare (veh)						
Median type				None	None	
Median storage veh)						
Upstream signal (ft)						
pX, platoon unblocked						
vC, conflicting volume	304	122	123			
vC1, stage 1 conf vol						
vC2, stage 2 conf vol						
vCu, unblocked vol	304	122	123			
tC, single (s)	6.4	6.2	4.1			
tC, 2 stage (s)						
tF (s)	3.5	3.3	2.2			
p0 queue free %	100	100	100			
cM capacity (veh/h)	687	929	1464			

Direction, Lane #	EB 1	NB 1	SB 1
Volume Total	2	180	123
Volume Left	1	1	0
Volume Right	1	0	1
cSH	790	1464	1700
Volume to Capacity	0.00	0.00	0.07
Queue Length 95th (ft)	0	0	0
Control Delay (s)	9.6	0.1	0.0
Lane LOS	A	A	
Approach Delay (s)	9.6	0.1	0.0
Approach LOS	A		

Intersection Summary			
Average Delay	0.1		
Intersection Capacity Utilization	19.5%	ICU Level of Service	A
Analysis Period (min)	15		

Movement	EBL	EBR	NBL	NBT	SBT	SBR
Lane Configurations						
Volume (veh/h)	2	3	3	161	103	1
Sign Control	Stop			Free	Free	
Grade	0%			0%	0%	
Peak Hour Factor	0.92	0.92	0.92	0.92	0.92	0.92
Hourly flow rate (vph)	2	3	3	175	112	1
Pedestrians						
Lane Width (ft)						
Walking Speed (ft/s)						
Percent Blockage						
Right turn flare (veh)						
Median type				None	None	
Median storage veh)						
Upstream signal (ft)						
pX, platoon unblocked						
vC, conflicting volume	294	112	113			
vC1, stage 1 conf vol						
vC2, stage 2 conf vol						
vCu, unblocked vol	294	112	113			
tC, single (s)	6.4	6.2	4.1			
tC, 2 stage (s)						
tF (s)	3.5	3.3	2.2			
p0 queue free %	100	100	100			
cM capacity (veh/h)	695	940	1476			

Direction, Lane #	EB 1	NB 1	SB 1
Volume Total	5	178	113
Volume Left	2	3	0
Volume Right	3	0	1
cSH	824	1476	1700
Volume to Capacity	0.01	0.00	0.07
Queue Length 95th (ft)	0	0	0
Control Delay (s)	9.4	0.2	0.0
Lane LOS	A	A	
Approach Delay (s)	9.4	0.2	0.0
Approach LOS	A		

Intersection Summary			
Average Delay	0.3		
Intersection Capacity Utilization	20.9%	ICU Level of Service	A
Analysis Period (min)	15		

Movement	EBL	EBR	NBL	NBT	SBT	SBR
Lane Configurations						
Volume (veh/h)	17	21	6	142	72	13
Sign Control	Stop			Free	Free	
Grade	0%			0%	0%	
Peak Hour Factor	0.92	0.92	0.92	0.92	0.92	0.92
Hourly flow rate (vph)	18	23	7	154	78	14
Pedestrians						
Lane Width (ft)						
Walking Speed (ft/s)						
Percent Blockage						
Right turn flare (veh)						
Median type				None	None	
Median storage veh)						
Upstream signal (ft)						
pX, platoon unblocked						
vC, conflicting volume	253	85	92			
vC1, stage 1 conf vol						
vC2, stage 2 conf vol						
vCu, unblocked vol	253	85	92			
tC, single (s)	6.4	6.2	4.1			
tC, 2 stage (s)						
tF (s)	3.5	3.3	2.2			
p0 queue free %	97	98	100			
cM capacity (veh/h)	733	974	1502			

Direction, Lane #	EB 1	NB 1	SB 1
Volume Total	41	161	92
Volume Left	18	7	0
Volume Right	23	0	14
cSH	849	1502	1700
Volume to Capacity	0.05	0.00	0.05
Queue Length 95th (ft)	4	0	0
Control Delay (s)	9.5	0.3	0.0
Lane LOS	A	A	
Approach Delay (s)	9.5	0.3	0.0
Approach LOS	A		

Intersection Summary			
Average Delay	1.5		
Intersection Capacity Utilization	22.3%	ICU Level of Service	A
Analysis Period (min)	15		

Movement	EBL	EBT	EBR	WBL	WBT	WBR	NBL	NBT	NBR	SBL	SBT	SBR
Lane Configurations												
Sign Control		Stop			Stop			Stop			Stop	
Volume (vph)	3	100	32	29	104	2	24	121	13	2	4	4
Peak Hour Factor	0.92	0.92	0.92	0.92	0.92	0.92	0.92	0.92	0.92	0.92	0.92	0.92
Hourly flow rate (vph)	3	109	35	32	113	2	26	132	14	2	4	4

Direction, Lane #	EB 1	WB 1	NB 1	SB 1
Volume Total (vph)	147	147	172	11
Volume Left (vph)	3	32	26	2
Volume Right (vph)	35	2	14	4
Hadj (s)	-0.10	0.07	0.02	-0.17
Departure Headway (s)	4.4	4.6	4.6	4.6
Degree Utilization, x	0.18	0.19	0.22	0.01
Capacity (veh/h)	777	743	737	707
Control Delay (s)	8.4	8.6	8.9	7.7
Approach Delay (s)	8.4	8.6	8.9	7.7
Approach LOS	A	A	A	A

Intersection Summary			
Delay	8.6		
HCM Level of Service	A		
Intersection Capacity Utilization	35.1%	ICU Level of Service	A
Analysis Period (min)	15		

HCM Unsignalized Intersection Capacity Analysis
1: SW 97th Ave. & SW 174th St.

2/11/2015

Movement	EBL	EBT	EBR	WBL	WBT	WBR	NBL	NBT	NBR	SBL	SBT	SBR
Lane Configurations												
Sign Control		Stop			Stop			Stop			Stop	
Volume (vph)	2	131	39	32	144	0	29	10	13	1	1	3
Peak Hour Factor	0.90	0.90	0.90	0.90	0.90	0.90	0.90	0.90	0.90	0.90	0.90	0.90
Hourly flow rate (vph)	2	146	43	36	160	0	32	11	14	1	1	3

Direction, Lane #	EB 1	WB 1	NB 1	SB 1
Volume Total (vph)	191	196	58	6
Volume Left (vph)	2	36	32	1
Volume Right (vph)	43	0	14	3
Hadj (s)	-0.10	0.07	0.00	-0.29
Departure Headway (s)	4.2	4.3	4.7	4.5
Degree Utilization, x	0.22	0.23	0.08	0.01
Capacity (veh/h)	844	806	699	715
Control Delay (s)	8.3	8.6	8.1	7.6
Approach Delay (s)	8.3	8.6	8.1	7.6
Approach LOS	A	A	A	A

Intersection Summary			
Delay	8.4		
HCM Level of Service	A		
Intersection Capacity Utilization	38.2%	ICU Level of Service	A
Analysis Period (min)	15		

Lane Group	EBL	NBT	SBT	NET
Lane Group Flow (vph)	129	163	51	2371
v/c Ratio	0.73	0.45	0.20	0.71
Control Delay	100.9	17.0	71.6	21.2
Queue Delay	0.0	0.0	0.0	0.0
Total Delay	100.9	17.0	71.6	21.2
Queue Length 50th (ft)	150	16	54	618
Queue Length 95th (ft)	230	96	105	752
Internal Link Dist (ft)	257	1041	665	1300
Turn Bay Length (ft)				
Base Capacity (vph)	270	361	252	3357
Starvation Cap Reductn	0	0	0	0
Spillback Cap Reductn	0	0	0	0
Storage Cap Reductn	0	0	0	0
Reduced v/c Ratio	0.48	0.45	0.20	0.71

Intersection Summary

Movement	EBL	EBR	NBL	NBT	NBR	SBT	SBR	NEL2	NEL	NET	NER
Lane Configurations											
Volume (vph)	4	120	7	8	142	25	24	4	20	2210	42
Ideal Flow (vphpl)	1900	1900	1900	1900	1900	1900	1900	1900	1900	1900	1900
Total Lost time (s)	5.0			5.0		5.0				5.0	
Lane Util. Factor	1.00			1.00		1.00				0.91	
Frt	0.87			0.88		0.93				1.00	
Flt Protected	1.00			1.00		1.00				1.00	
Satd. Flow (prot)	1617			1631		1739				5068	
Flt Permitted	1.00			0.99		1.00				1.00	
Satd. Flow (perm)	1617			1617		1739				5068	
Peak-hour factor, PHF	0.96	0.96	0.96	0.96	0.96	0.96	0.96	0.96	0.96	0.96	0.96
Adj. Flow (vph)	4	125	7	8	148	26	25	4	21	2302	44
RTOR Reduction (vph)	0	0	0	127	0	0	0	0	0	1	0
Lane Group Flow (vph)	129	0	0	36	0	51	0	0	0	2370	0
Parking (#/hr)		0									
Turn Type	NA		Perm	NA		NA		Perm	Perm	NA	
Protected Phases	3			4		8				6	
Permitted Phases			4					6	6		
Actuated Green, G (s)	19.6			26.0		26.0				119.1	
Effective Green, g (s)	19.6			26.0		26.0				119.1	
Actuated g/C Ratio	0.11			0.14		0.14				0.66	
Clearance Time (s)	5.0			5.0		5.0				5.0	
Vehicle Extension (s)	3.0			3.0		3.0				3.0	
Lane Grp Cap (vph)	176			234		252				3359	
v/s Ratio Prot	c0.08					c0.03					
v/s Ratio Perm				0.02						0.47	
v/c Ratio	0.73			0.16		0.20				0.71	
Uniform Delay, d1	77.5			67.2		67.7				19.2	
Progression Factor	1.00			1.00		1.00				1.00	
Incremental Delay, d2	14.6			1.4		1.8				1.3	
Delay (s)	92.1			68.7		69.5				20.5	
Level of Service	F			E		E				C	
Approach Delay (s)	92.1			68.7		69.5				20.5	
Approach LOS	F			E		E				C	

Intersection Summary			
HCM Average Control Delay	27.7	HCM Level of Service	C
HCM Volume to Capacity ratio	0.63		
Actuated Cycle Length (s)	179.7	Sum of lost time (s)	15.0
Intersection Capacity Utilization	80.0%	ICU Level of Service	D
Analysis Period (min)	15		

c Critical Lane Group

Movement	EBL	EBR	NBL	NBT	SBT	SBR
Lane Configurations						
Volume (veh/h)	5	78	20	143	108	10
Sign Control	Stop			Free	Free	
Grade	0%			0%	0%	
Peak Hour Factor	0.92	0.92	0.92	0.92	0.92	0.92
Hourly flow rate (vph)	5	85	22	155	117	11
Pedestrians						
Lane Width (ft)						
Walking Speed (ft/s)						
Percent Blockage						
Right turn flare (veh)						
Median type				None	None	
Median storage veh)						
Upstream signal (ft)					1121	
pX, platoon unblocked						
vC, conflicting volume	322	123	128			
vC1, stage 1 conf vol						
vC2, stage 2 conf vol						
vCu, unblocked vol	322	123	128			
tC, single (s)	6.4	6.2	4.1			
tC, 2 stage (s)						
tF (s)	3.5	3.3	2.2			
p0 queue free %	99	91	99			
cM capacity (veh/h)	662	928	1458			

Direction, Lane #	EB 1	NB 1	SB 1
Volume Total	90	177	128
Volume Left	5	22	0
Volume Right	85	0	11
cSH	906	1458	1700
Volume to Capacity	0.10	0.01	0.08
Queue Length 95th (ft)	8	1	0
Control Delay (s)	9.4	1.0	0.0
Lane LOS	A	A	
Approach Delay (s)	9.4	1.0	0.0
Approach LOS	A		

Intersection Summary			
Average Delay	2.6		
Intersection Capacity Utilization	27.1%	ICU Level of Service	A
Analysis Period (min)	15		

Movement	WBL	WBR	NBT	NBR	SBL	SBT
Lane Configurations						
Volume (veh/h)	26	25	138	19	14	127
Sign Control	Stop		Free			Free
Grade	0%		0%			0%
Peak Hour Factor	0.94	0.94	0.94	0.94	0.94	0.94
Hourly flow rate (vph)	28	27	147	20	15	135
Pedestrians						
Lane Width (ft)						
Walking Speed (ft/s)						
Percent Blockage						
Right turn flare (veh)						
Median type			None			None
Median storage veh)						
Upstream signal (ft)						
pX, platoon unblocked						
vC, conflicting volume	322	157			167	
vC1, stage 1 conf vol						
vC2, stage 2 conf vol						
vCu, unblocked vol	322	157			167	
tC, single (s)	6.4	6.2			4.1	
tC, 2 stage (s)						
tF (s)	3.5	3.3			2.2	
p0 queue free %	96	97			99	
cM capacity (veh/h)	665	889			1411	

Direction, Lane #	WB 1	NB 1	SB 1
Volume Total	54	167	150
Volume Left	28	0	15
Volume Right	27	20	0
cSH	758	1700	1411
Volume to Capacity	0.07	0.10	0.01
Queue Length 95th (ft)	6	0	1
Control Delay (s)	10.1	0.0	0.8
Lane LOS	B		A
Approach Delay (s)	10.1	0.0	0.8
Approach LOS	B		

Intersection Summary			
Average Delay	1.8		
Intersection Capacity Utilization	28.4%	ICU Level of Service	A
Analysis Period (min)	15		

Movement	EBL	EBR	NBL	NBT	SBT	SBR
Lane Configurations						
Volume (veh/h)	5	49	15	166	157	4
Sign Control	Stop			Free	Free	
Grade	0%			0%	0%	
Peak Hour Factor	0.93	0.93	0.93	0.93	0.93	0.93
Hourly flow rate (vph)	5	53	16	178	169	4
Pedestrians						
Lane Width (ft)						
Walking Speed (ft/s)						
Percent Blockage						
Right turn flare (veh)						
Median type				None	None	
Median storage veh)						
Upstream signal (ft)				1230		
pX, platoon unblocked						
vC, conflicting volume	382	171	173			
vC1, stage 1 conf vol						
vC2, stage 2 conf vol						
vCu, unblocked vol	382	171	173			
tC, single (s)	6.4	6.2	4.1			
tC, 2 stage (s)						
tF (s)	3.5	3.3	2.2			
p0 queue free %	99	94	99			
cM capacity (veh/h)	614	873	1404			

Direction, Lane #	EB 1	NB 1	SB 1
Volume Total	58	195	173
Volume Left	5	16	0
Volume Right	53	0	4
cSH	840	1404	1700
Volume to Capacity	0.07	0.01	0.10
Queue Length 95th (ft)	6	1	0
Control Delay (s)	9.6	0.7	0.0
Lane LOS	A	A	
Approach Delay (s)	9.6	0.7	0.0
Approach LOS	A		

Intersection Summary			
Average Delay	1.6		
Intersection Capacity Utilization	31.2%	ICU Level of Service	A
Analysis Period (min)	15		

Movement	EBL	EBT	EBR	WBL	WBT	WBR	NBL	NBT	NBR	SBL	SBT	SBR
Lane Configurations												
Volume (veh/h)	5	4	28	3	1	6	3	175	2	2	188	7
Sign Control		Stop			Stop			Free			Free	
Grade		0%			0%			0%			0%	
Peak Hour Factor	0.87	0.87	0.87	0.87	0.87	0.87	0.87	0.87	0.87	0.87	0.87	0.87
Hourly flow rate (vph)	6	5	32	3	1	7	3	201	2	2	216	8
Pedestrians												
Lane Width (ft)												
Walking Speed (ft/s)												
Percent Blockage												
Right turn flare (veh)												
Median type								None			None	
Median storage veh)												
Upstream signal (ft)								904				
pX, platoon unblocked	0.98	0.98		0.98	0.98	0.98				0.98		
vC, conflicting volume	441	435	220	468	438	202	224			203		
vC1, stage 1 conf vol												
vC2, stage 2 conf vol												
vCu, unblocked vol	424	417	220	451	420	181	224			182		
tC, single (s)	7.1	6.5	6.2	7.1	6.5	6.2	4.1			4.1		
tC, 2 stage (s)												
tF (s)	3.5	4.0	3.3	3.5	4.0	3.3	2.2			2.2		
p0 queue free %	99	99	96	99	100	99	100			100		
cM capacity (veh/h)	525	516	820	485	514	848	1345			1371		

Direction, Lane #	EB 1	WB 1	NB 1	SB 1
Volume Total	43	11	207	226
Volume Left	6	3	3	2
Volume Right	32	7	2	8
cSH	719	657	1345	1371
Volume to Capacity	0.06	0.02	0.00	0.00
Queue Length 95th (ft)	5	1	0	0
Control Delay (s)	10.3	10.6	0.2	0.1
Lane LOS	B	B	A	A
Approach Delay (s)	10.3	10.6	0.2	0.1
Approach LOS	B	B		

Intersection Summary			
Average Delay	1.3		
Intersection Capacity Utilization	21.4%	ICU Level of Service	A
Analysis Period (min)	15		

Movement	EBL	EBT	EBR	WBL	WBT	WBR	NBL	NBT	NBR	SBL	SBT	SBR
Lane Configurations												
Volume (veh/h)	1	0	2	0	0	0	1	184	0	1	211	2
Sign Control		Stop			Stop			Free			Free	
Grade		0%			0%			0%			0%	
Peak Hour Factor	0.91	0.91	0.91	0.91	0.91	0.91	0.91	0.91	0.91	0.91	0.91	0.91
Hourly flow rate (vph)	1	0	2	0	0	0	1	202	0	1	232	2
Pedestrians												
Lane Width (ft)												
Walking Speed (ft/s)												
Percent Blockage												
Right turn flare (veh)												
Median type								None			None	
Median storage veh)												
Upstream signal (ft)								601				
pX, platoon unblocked	0.94	0.94		0.94	0.94	0.94				0.94		
vC, conflicting volume	440	440	233	442	441	202	234			202		
vC1, stage 1 conf vol												
vC2, stage 2 conf vol												
vCu, unblocked vol	376	376	233	378	377	125	234			125		
tC, single (s)	7.1	6.5	6.2	7.1	6.5	6.2	4.1			4.1		
tC, 2 stage (s)												
tF (s)	3.5	4.0	3.3	3.5	4.0	3.3	2.2			2.2		
p0 queue free %	100	100	100	100	100	100	100			100		
cM capacity (veh/h)	548	523	806	544	522	874	1333			1380		

Direction, Lane #	EB 1	WB 1	NB 1	SB 1
Volume Total	3	0	203	235
Volume Left	1	0	1	1
Volume Right	2	0	0	2
cSH	697	1700	1333	1380
Volume to Capacity	0.00	0.00	0.00	0.00
Queue Length 95th (ft)	0	0	0	0
Control Delay (s)	10.2	0.0	0.0	0.0
Lane LOS	B	A	A	A
Approach Delay (s)	10.2	0.0	0.0	0.0
Approach LOS	B	A		

Intersection Summary			
Average Delay	0.1		
Intersection Capacity Utilization	21.9%	ICU Level of Service	A
Analysis Period (min)	15		

Movement	EBL	EBT	EBR	WBL	WBT	WBR	NBL	NBT	NBR	SBL	SBT	SBR
Lane Configurations												
Volume (veh/h)	7	1	65	1	2	1	10	179	1	1	208	1
Sign Control		Stop			Stop			Free			Free	
Grade		0%			0%			0%			0%	
Peak Hour Factor	0.93	0.93	0.93	0.93	0.93	0.93	0.93	0.93	0.93	0.93	0.93	0.93
Hourly flow rate (vph)	8	1	70	1	2	1	11	192	1	1	224	1
Pedestrians												
Lane Width (ft)												
Walking Speed (ft/s)												
Percent Blockage												
Right turn flare (veh)												
Median type								None			None	
Median storage veh)												
Upstream signal (ft)								300				
pX, platoon unblocked	0.90	0.90		0.90	0.90	0.90				0.90		
vC, conflicting volume	443	441	224	511	441	193	225			194		
vC1, stage 1 conf vol												
vC2, stage 2 conf vol												
vCu, unblocked vol	327	325	224	403	325	50	225			50		
tC, single (s)	7.1	6.5	6.2	7.1	6.5	6.2	4.1			4.1		
tC, 2 stage (s)												
tF (s)	3.5	4.0	3.3	3.5	4.0	3.3	2.2			2.2		
p0 queue free %	99	100	91	100	100	100	99			100		
cM capacity (veh/h)	558	529	815	456	529	918	1344			1402		

Direction, Lane #	EB 1	WB 1	NB 1	SB 1
Volume Total	78	4	204	226
Volume Left	8	1	11	1
Volume Right	70	1	1	1
cSH	775	567	1344	1402
Volume to Capacity	0.10	0.01	0.01	0.00
Queue Length 95th (ft)	8	1	1	0
Control Delay (s)	10.2	11.4	0.5	0.0
Lane LOS	B	B	A	A
Approach Delay (s)	10.2	11.4	0.5	0.0
Approach LOS	B	B		

Intersection Summary			
Average Delay	1.9		
Intersection Capacity Utilization	28.2%	ICU Level of Service	A
Analysis Period (min)	15		

Lane Group	EBL	EBT	EBR	WBL	WBT	NBL	NBT	SBL	SBT
Lane Group Flow (vph)	40	502	185	447	600	155	430	18	285
v/c Ratio	0.06	0.81	0.34	0.78	0.45	0.41	0.62	0.06	0.51
Control Delay	11.1	54.3	18.7	26.2	36.2	42.9	41.9	39.8	57.9
Queue Delay	0.0	0.0	0.0	0.0	0.0	0.0	0.0	0.0	0.0
Total Delay	11.1	54.3	18.7	26.2	36.2	42.9	41.9	39.8	57.9
Queue Length 50th (ft)	14	380	50	207	231	108	127	12	125
Queue Length 95th (ft)	30	601	131	334	338	206	220	37	205
Internal Link Dist (ft)		1915			531		229		156
Turn Bay Length (ft)	130			95		155		130	
Base Capacity (vph)	786	818	698	757	1693	371	781	339	655
Starvation Cap Reductn	0	0	0	0	0	0	0	0	0
Spillback Cap Reductn	0	0	0	0	0	0	0	0	0
Storage Cap Reductn	0	0	0	0	0	0	0	0	0
Reduced v/c Ratio	0.05	0.61	0.27	0.59	0.35	0.42	0.55	0.05	0.44

Intersection Summary

Movement	EBL	EBT	EBR	WBL	WBT	WBR	NBL	NBT	NBR	SBL	SBT	SBR
Lane Configurations												
Volume (vph)	37	462	170	411	541	11	143	180	215	17	217	45
Ideal Flow (vphpl)	1900	1900	1900	1900	1900	1900	1900	1900	1900	1900	1900	1900
Total Lost time (s)	3.0	3.0	5.0	3.0	3.0		3.0	3.0		3.0	3.0	
Lane Util. Factor	1.00	1.00	1.00	1.00	0.95		1.00	0.95		1.00	0.95	
Frt	1.00	1.00	0.85	1.00	1.00		1.00	0.92		1.00	0.97	
Flt Protected	0.95	1.00	1.00	0.95	1.00		0.95	1.00		0.95	1.00	
Satd. Flow (prot)	1770	1863	1583	1770	3529		1770	3250		1770	3448	
Flt Permitted	0.35	1.00	1.00	0.27	1.00		0.49	1.00		0.49	1.00	
Satd. Flow (perm)	655	1863	1583	496	3529		920	3250		912	3448	
Peak-hour factor, PHF	0.92	0.92	0.92	0.92	0.92	0.92	0.92	0.92	0.92	0.92	0.92	0.92
Adj. Flow (vph)	40	502	185	447	588	12	155	196	234	18	236	49
RTOR Reduction (vph)	0	0	82	0	1	0	0	119	0	0	10	0
Lane Group Flow (vph)	40	502	103	447	599	0	155	311	0	18	275	0
Turn Type	pm+pt	NA	custom	pm+pt	NA		custom	NA		custom	NA	
Protected Phases	1 2	2 4		1 3	3 4		5 6	6 8		5 7	7 8	
Permitted Phases	2 4		4	3 4			8			8		
Actuated Green, G (s)	74.3	44.9	41.1	73.8	50.4		36.3	21.3		30.6	21.6	
Effective Green, g (s)	74.3	44.9	41.1	73.8	50.4		36.3	21.3		30.6	21.6	
Actuated g/C Ratio	0.53	0.32	0.29	0.52	0.36		0.26	0.15		0.22	0.15	
Clearance Time (s)			5.0									
Vehicle Extension (s)			3.0									
Lane Grp Cap (vph)	606	591	460	553	1257		358	489		286	526	
v/s Ratio Prot	0.02	c0.27		c0.19	0.17		c0.06	c0.10		0.01	c0.08	
v/s Ratio Perm	0.02		0.07	0.23			0.05			0.01		
v/c Ratio	0.07	0.85	0.22	0.81	0.48		0.43	0.64		0.06	0.52	
Uniform Delay, d1	16.5	45.1	38.1	24.0	35.3		42.9	56.5		43.9	55.2	
Progression Factor	1.00	1.00	1.00	1.00	1.00		1.00	1.00		1.00	1.00	
Incremental Delay, d2	0.0	11.0	0.2	8.5	0.3		0.8	2.7		0.1	0.9	
Delay (s)	16.6	56.1	38.4	32.5	35.6		43.7	59.2		44.0	56.1	
Level of Service	B	E	D	C	D		D	E		D	E	
Approach Delay (s)		49.4			34.3			55.1			55.4	
Approach LOS		D			C			E			E	

Intersection Summary			
HCM Average Control Delay	45.4	HCM Level of Service	D
HCM Volume to Capacity ratio	0.71		
Actuated Cycle Length (s)	141.5	Sum of lost time (s)	21.0
Intersection Capacity Utilization	76.5%	ICU Level of Service	D
Analysis Period (min)	15		
c Critical Lane Group			

Movement	EBL	EBT	WBT	WBR	SBL	SBR
Lane Configurations						
Volume (veh/h)	219	617	761	10	22	218
Sign Control		Free	Free		Stop	
Grade		0%	0%		0%	
Peak Hour Factor	0.96	0.96	0.96	0.96	0.96	0.96
Hourly flow rate (vph)	228	643	793	10	23	227
Pedestrians						
Lane Width (ft)						
Walking Speed (ft/s)						
Percent Blockage						
Right turn flare (veh)						
Median type		None	None			
Median storage veh)						
Upstream signal (ft)		611				
pX, platoon unblocked					0.78	
vC, conflicting volume	803				1897	798
vC1, stage 1 conf vol						
vC2, stage 2 conf vol						
vCu, unblocked vol	803				2009	798
tC, single (s)	4.1				6.4	6.2
tC, 2 stage (s)						
tF (s)	2.2				3.5	3.3
p0 queue free %	72				37	41
cM capacity (veh/h)	821				37	386

Direction, Lane #	EB 1	EB 2	WB 1	SB 1
Volume Total	228	643	803	250
Volume Left	228	0	0	23
Volume Right	0	0	10	227
cSH	821	1700	1700	206
Volume to Capacity	0.28	0.38	0.47	1.21
Queue Length 95th (ft)	28	0	0	321
Control Delay (s)	11.1	0.0	0.0	179.7
Lane LOS	B			F
Approach Delay (s)	2.9		0.0	179.7
Approach LOS				F

Intersection Summary			
Average Delay	24.7		
Intersection Capacity Utilization	77.5%	ICU Level of Service	D
Analysis Period (min)	15		

Lane Group	EBL	EBT	WBL	WBT	NBL	NBT	SBL	SBT
Lane Group Flow (vph)	214	524	232	480	84	1738	222	2341
v/c Ratio	0.73	0.90	0.85	0.85	0.67	0.79	0.87	0.90
Control Delay	88.2	92.9	100.0	87.7	61.2	46.4	84.8	45.9
Queue Delay	0.0	0.0	0.0	0.0	0.0	0.0	0.0	0.0
Total Delay	88.2	92.9	100.0	87.7	61.2	46.4	84.8	45.9
Queue Length 50th (ft)	255	335	307	318	50	683	218	964
Queue Length 95th (ft)	361	#436	#450	392	#136	753	#361	1040
Internal Link Dist (ft)		364		1915		469		768
Turn Bay Length (ft)			286		160		130	
Base Capacity (vph)	314	623	313	648	131	2212	286	2670
Starvation Cap Reductn	0	0	0	0	0	0	0	0
Spillback Cap Reductn	0	0	0	0	0	0	0	0
Storage Cap Reductn	0	0	0	0	0	0	0	0
Reduced v/c Ratio	0.68	0.84	0.74	0.74	0.64	0.79	0.78	0.88

Intersection Summary

95th percentile volume exceeds capacity, queue may be longer.
Queue shown is maximum after two cycles.

Movement	EBL	EBT	EBR	WBL	WBT	WBR	NBL	NBT	NBR	SBL	SBT	SBR
Lane Configurations												
Volume (vph)	197	429	53	324	319	12	77	1274	325	204	1909	245
Ideal Flow (vphpl)	1900	1900	1900	1900	1900	1900	1900	1900	1900	1900	1900	1900
Total Lost time (s)	5.0	5.0		5.0	5.0		3.0	5.0		3.0	5.0	
Lane Util. Factor	1.00	0.95		0.91	0.91		1.00	0.91		1.00	0.91	
Frt	1.00	0.98		1.00	1.00		1.00	0.97		1.00	0.98	
Flt Protected	0.95	1.00		0.95	0.99		0.95	1.00		0.95	1.00	
Satd. Flow (prot)	1770	3480		1610	3335		1770	4930		1770	4999	
Flt Permitted	0.95	1.00		0.95	0.99		0.05	1.00		0.05	1.00	
Satd. Flow (perm)	1770	3480		1610	3335		93	4930		89	4999	
Peak-hour factor, PHF	0.92	0.92	0.92	0.92	0.92	0.92	0.92	0.92	0.92	0.92	0.92	0.92
Adj. Flow (vph)	214	466	58	352	347	13	84	1385	353	222	2075	266
RTOR Reduction (vph)	0	5	0	0	1	0	0	23	0	0	8	0
Lane Group Flow (vph)	214	519	0	232	479	0	84	1715	0	222	2333	0
Turn Type	Split	NA		Split	NA		pm+pt	NA		pm+pt	NA	
Protected Phases	4	4		8	8		5	2		1	6	
Permitted Phases							2			6		
Actuated Green, G (s)	30.0	30.0		30.8	30.8		88.9	80.4		105.3	93.8	
Effective Green, g (s)	30.0	30.0		30.8	30.8		88.9	80.4		105.3	93.8	
Actuated g/C Ratio	0.17	0.17		0.17	0.17		0.49	0.44		0.58	0.52	
Clearance Time (s)	5.0	5.0		5.0	5.0		3.0	5.0		3.0	5.0	
Vehicle Extension (s)	3.0	3.0		3.0	3.0		3.0	3.0		3.0	3.0	
Lane Grp Cap (vph)	293	576		274	567		124	2189		255	2589	
v/s Ratio Prot	0.12	c0.15		c0.14	0.14		0.03	0.35		c0.11	c0.47	
v/s Ratio Perm							0.30			0.40		
v/c Ratio	0.73	0.90		0.85	0.85		0.68	0.78		0.87	0.90	
Uniform Delay, d1	71.7	74.1		72.9	72.8		37.8	42.9		59.4	39.5	
Progression Factor	1.00	1.00		1.00	1.00		1.00	1.00		1.00	1.00	
Incremental Delay, d2	9.0	17.2		20.8	11.1		13.7	2.9		26.0	4.8	
Delay (s)	80.7	91.3		93.6	84.0		51.5	45.8		85.4	44.3	
Level of Service	F	F		F	F		D	D		F	D	
Approach Delay (s)		88.3			87.1			46.1			47.8	
Approach LOS		F			F			D			D	

Intersection Summary			
HCM Average Control Delay	57.2	HCM Level of Service	E
HCM Volume to Capacity ratio	0.87		
Actuated Cycle Length (s)	181.1	Sum of lost time (s)	13.0
Intersection Capacity Utilization	88.4%	ICU Level of Service	E
Analysis Period (min)	15		
c Critical Lane Group			

Movement	EBL	EBT	EBR	WBL	WBT	WBR	NBL	NBT	NBR	SBL	SBT	SBR
Lane Configurations												
Volume (vph)	197	429	53	324	319	12	77	1274	325	204	1909	245
Movement Number	7	4	14	3	8	18	5	2	12	1	6	16
Initial Queue, veh	0	0	0	0	0	0	0	0	0	0	0	0
Ped-Bike Adj. Factor (A_pbT)	1.00		1.00	1.00		1.00	1.00		1.00	1.00		1.00
Parking, Bus Adj. Factors	1.00	1.00	1.00	1.00	1.00	1.00	1.00	1.00	1.00	1.00	1.00	1.00
Adj. Sat. Flow Rate, veh/h/ln	1863	1863	1863	1863	1863	1863	1863	1863	1863	1863	1863	1863
Lanes	1	2	0	1	2	0	1	3	0	1	3	0
Lane Assignment												
Capacity, veh/h	282	518	64	345	694	26	118	1858	472	243	2335	295
Proportion Arriving On Green	0.16	0.16	0.16	0.19	0.19	0.19	0.04	0.46	0.46	0.09	0.51	0.51
Movement Delay, s/veh	81.5	98.3	100.4	126.4	65.7	65.8	53.7	43.3	46.6	69.5	44.7	51.5
Movement LOS	F	F	F	F	E	E	D	D	D	E	D	D
Approach Volume, veh/h		738			712			1822			2563	
Approach Delay, s/veh		94.1			95.8			44.8			49.0	
Approach LOS		F			F			D			D	

Timer:	1	2	3	4	5	6	7	8
Assigned Phase	1	2	8	4	5	6		
Case No	1.1	4.0	10.0	10.0	1.1	4.0		
Phase Duration (G+Y+Rc), s	18.65	87.69	40.00	33.65	9.44	96.91		
Change Period (Y+Rc), s	3.00	5.00	5.00	5.00	3.00	5.00		
Max. Allowable Headway (MAH), s	4.00	3.96	3.96	3.96	4.00	3.96		
Maximum Green Setting (Gmax), s	25.00	80.00	35.00	32.00	9.00	96.00		
Max. Queue Clearance Time (g_c+I1), s	15.17	52.92	37.00	27.45	6.50	77.22		
Green Extension Time (g_e), s	0.48	22.82	0.00	1.21	0.04	14.68		
Probability of Phase Call (p_c)	1.000	1.000	1.000	1.000	0.985	1.000		
Probability of Max Out (p_x)	0.018	0.827	1.000	0.837	1.000	0.885		

Left-Turn Movement Data					
Assigned Movement	1		3	7	5
Mvmt. Sat Flow, veh/h	1774.04		1774.04	1774.04	1774.04

Through Movement Data					
Assigned Movement		2	8	4	6
Mvmt. Sat Flow, veh/h		4043.13	3568.00	3254.63	4572.75

Right-Turn Movement Data					
Assigned Movement		12	18	14	16
Mvmt. Sat Flow, veh/h		1028.34	133.87	400.23	578.16

Left Lane Group Data								
Assigned Movement	1	0	3	7	5	0	0	0
Lane Assignment	L (Pr/Pm)		L	LL (Pr/Pm)				
Lanes in Group	1	0	1	1	1	0	0	0
Group Volume (v), veh/h	221.7	0.0	352.2	214.1	83.7	0.0	0.0	0.0
Group Sat. Flow (s), veh/h/ln	1774.0	0.0	1774.0	1774.0	1774.0	0.0	0.0	0.0
Queue Serve Time (g_s), s	13.2	0.0	35.0	20.8	4.5	0.0	0.0	0.0
Cycle Queue Clear Time (g_c), s	13.2	0.0	35.0	20.8	4.5	0.0	0.0	0.0

Perm LT Sat Flow Rate (s_l), veh/h/ln	276.9	0.0	1774.0	1774.0	153.1	0.0	0.0	0.0
Shared LT Sat Flow (s_sh), veh/h/ln	0.0	0.0	0.0	0.0	0.0	0.0	0.0	0.0
Perm LT Eff. Green (g_p), s	93.9	0.0	0.0	0.0	82.7	0.0	0.0	0.0
Perm LT Serve Time (g_u), s	31.8	0.0	0.0	0.0	16.7	0.0	0.0	0.0
Perm LT Que Serve Time (g_ps), s	31.8	0.0	0.0	0.0	16.7	0.0	0.0	0.0
Time to First Blk (g_f), s	0.0	0.0	0.0	0.0	0.0	0.0	0.0	0.0
Serve Time pre Blk (g_fs), s	0.0	0.0	0.0	0.0	0.0	0.0	0.0	0.0
Proportion LT Inside Lane (P_L)	1.000	0.000	1.000	1.000	1.000	0.000	0.000	0.000
Lane Group Capacity (c), veh/h	243.1	0.0	345.0	282.4	117.6	0.0	0.0	0.0
Volume-to-Capacity Ratio (X)	0.912	0.000	1.021	0.758	0.711	0.000	0.000	0.000
Available Capacity (c_a), veh/h	335.3	0.0	345.0	315.4	142.9	0.0	0.0	0.0
Upstream Filter Factor (I)	1.000	0.000	1.000	1.000	1.000	0.000	0.000	0.000
Uniform Delay (d1), s/veh	46.7	0.0	72.5	72.4	41.7	0.0	0.0	0.0
Incremental Delay (d2), s/veh	22.8	0.0	53.9	9.2	12.1	0.0	0.0	0.0
Initial Queue Delay (d3), s/veh	0.0	0.0	0.0	0.0	0.0	0.0	0.0	0.0
Control Delay (d), s/veh	69.5	0.0	126.4	81.5	53.7	0.0	0.0	0.0
First-Term Queue (Q1), veh/ln	5.8	0.0	16.0	9.5	2.0	0.0	0.0	0.0
Second-Term Queue (Q2), veh/ln	1.5	0.0	5.2	0.7	0.4	0.0	0.0	0.0
Third-Term Queue (Q3), veh/ln	0.0	0.0	0.0	0.0	0.0	0.0	0.0	0.0
Percentile bk-of-que factor (f_B%)	1.000	0.000	1.000	1.000	1.000	0.000	0.000	0.000
Percentile Back of Queue (Q%), veh/ln	7.3	0.0	21.2	10.3	2.4	0.0	0.0	0.0
Percentile Storage Ratio (RQ%)	1.43	0.00	1.88	0.75	0.37	0.00	0.00	0.00
Initial Queue (Qb), veh	0.0	0.0	0.0	0.0	0.0	0.0	0.0	0.0
Final (Residual) Queue (Qe), veh	0.0	0.0	1.8	0.0	0.0	0.0	0.0	0.0
Saturated Delay (ds), s/veh	0.0	0.0	0.0	0.0	0.0	0.0	0.0	0.0
Saturated Queue (Qs), veh	0.0	0.0	0.0	0.0	0.0	0.0	0.0	0.0
Saturated Capacity (cs), veh/h	0.0	0.0	0.0	0.0	0.0	0.0	0.0	0.0
Initial Queue Clear Time (tc), h	0.0	0.0	0.3	0.0	0.0	0.0	0.0	0.0
Middle Lane Group Data								
Assigned Movement	0	2	8	4	0	6	0	0
Lane Assignment		T	T	T		T		
Lanes in Group	0	2	1	1	0	2	0	0
Group Volume (v), veh/h	0.0	1160.5	180.6	266.0	0.0	1530.3	0.0	0.0
Group Sat. Flow (s), veh/h/ln	0.0	1695.1	1862.7	1862.7	0.0	1695.1	0.0	0.0
Queue Serve Time (g_s), s	0.0	50.6	15.6	25.2	0.0	72.5	0.0	0.0
Cycle Queue Clear Time (g_c), s	0.0	50.6	15.6	25.2	0.0	72.5	0.0	0.0
Lane Group Capacity (c), veh/h	0.0	1557.5	362.2	296.5	0.0	1731.0	0.0	0.0
Volume-to-Capacity Ratio (X)	0.000	0.745	0.499	0.897	0.000	0.884	0.000	0.000
Available Capacity (c_a), veh/h	0.0	1557.5	362.2	331.2	0.0	1808.1	0.0	0.0
Upstream Filter Factor (I)	0.000	1.000	1.000	1.000	0.000	1.000	0.000	0.000
Uniform Delay (d1), s/veh	0.0	40.0	64.7	74.2	0.0	39.3	0.0	0.0
Incremental Delay (d2), s/veh	0.0	3.3	1.1	24.0	0.0	5.4	0.0	0.0
Initial Queue Delay (d3), s/veh	0.0	0.0	0.0	0.0	0.0	0.0	0.0	0.0
Control Delay (d), s/veh	0.0	43.3	65.7	98.3	0.0	44.7	0.0	0.0
First-Term Queue (Q1), veh/ln	0.0	21.3	7.5	12.1	0.0	30.1	0.0	0.0
Second-Term Queue (Q2), veh/ln	0.0	0.7	0.1	2.0	0.0	1.3	0.0	0.0
Third-Term Queue (Q3), veh/ln	0.0	0.0	0.0	0.0	0.0	0.0	0.0	0.0
Percentile bk-of-que factor (f_B%)	0.000	1.000	1.000	1.000	0.000	1.000	0.000	0.000
Percentile Back of Queue (Q%), veh/ln	0.0	22.0	7.6	14.1	0.0	31.4	0.0	0.0
Percentile Storage Ratio (RQ%)	0.00	1.22	0.10	1.04	0.00	1.09	0.00	0.00

Initial Queue (Qb), veh	0.0	0.0	0.0	0.0	0.0	0.0	0.0	0.0
Final (Residual) Queue (Qe), veh	0.0	0.0	0.0	0.0	0.0	0.0	0.0	0.0
Saturated Delay (ds), s/veh	0.0	0.0	0.0	0.0	0.0	0.0	0.0	0.0
Saturated Queue (Qs), veh	0.0	0.0	0.0	0.0	0.0	0.0	0.0	0.0
Saturated Capacity (cs), veh/h	0.0	0.0	0.0	0.0	0.0	0.0	0.0	0.0
Initial Queue Clear Time (tc), h	0.0	0.0	0.0	0.0	0.0	0.0	0.0	0.0
Right Lane Group Data								
Assigned Movement	0	12	18	14	0	16	0	0
Lane Assignment		T+R	T+R	T+R		T+R		
Lanes in Group	0	1	1	1	0	1	0	0
Group Volume (v), veh/h	0.0	577.6	179.2	258.0	0.0	811.0	0.0	0.0
Group Sat. Flow (s), veh/h/ln	0.0	1681.3	1839.1	1792.1	0.0	1760.7	0.0	0.0
Queue Serve Time (g_s), s	0.0	50.9	15.7	25.4	0.0	75.2	0.0	0.0
Cycle Queue Clear Time (g_c), s	0.0	50.9	15.7	25.4	0.0	75.2	0.0	0.0
Prot RT Sat Flow Rate (s_R), veh/h/ln	0.0	0.0	0.0	0.0	0.0	0.0	0.0	0.0
Prot RT Eff. Green (g_R), s	0.0	0.0	0.0	0.0	0.0	0.0	0.0	0.0
Proportion RT Outside Lane (P_R)	0.000	0.612	0.073	0.223	0.000	0.328	0.000	0.000
Lane Group Capacity (c), veh/h	0.0	772.4	357.6	285.3	0.0	899.0	0.0	0.0
Volume-to-Capacity Ratio (X)	0.000	0.748	0.501	0.904	0.000	0.902	0.000	0.000
Available Capacity (c_a), veh/h	0.0	772.4	357.6	318.6	0.0	939.1	0.0	0.0
Upstream Filter Factor (I)	0.000	1.000	1.000	1.000	0.000	1.000	0.000	0.000
Uniform Delay (d1), s/veh	0.0	40.1	64.7	74.3	0.0	40.0	0.0	0.0
Incremental Delay (d2), s/veh	0.0	6.5	1.1	26.0	0.0	11.5	0.0	0.0
Initial Queue Delay (d3), s/veh	0.0	0.0	0.0	0.0	0.0	0.0	0.0	0.0
Control Delay (d), s/veh	0.0	46.6	65.8	100.4	0.0	51.5	0.0	0.0
First-Term Queue (Q1), veh/ln	0.0	21.2	7.4	11.8	0.0	32.5	0.0	0.0
Second-Term Queue (Q2), veh/ln	0.0	1.4	0.1	2.1	0.0	2.9	0.0	0.0
Third-Term Queue (Q3), veh/ln	0.0	0.0	0.0	0.0	0.0	0.0	0.0	0.0
Percentile bk-of-que factor (f_B%)	0.000	1.000	1.000	1.000	0.000	1.000	0.000	0.000
Percentile Back of Queue (Q%), veh/ln	0.0	22.6	7.5	13.9	0.0	35.3	0.0	0.0
Percentile Storage Ratio (RQ%)	0.00	1.26	0.10	1.02	0.00	1.22	0.00	0.00
Initial Queue (Qb), veh	0.0	0.0	0.0	0.0	0.0	0.0	0.0	0.0
Final (Residual) Queue (Qe), veh	0.0	0.0	0.0	0.0	0.0	0.0	0.0	0.0
Saturated Delay (ds), s/veh	0.0	0.0	0.0	0.0	0.0	0.0	0.0	0.0
Saturated Queue (Qs), veh	0.0	0.0	0.0	0.0	0.0	0.0	0.0	0.0
Saturated Capacity (cs), veh/h	0.0	0.0	0.0	0.0	0.0	0.0	0.0	0.0
Initial Queue Clear Time (tc), h	0.0	0.0	0.0	0.0	0.0	0.0	0.0	0.0

Intersection Summary	
HCM Average Control Delay	59.1
HCM Level of Service	E

Movement	EBL	EBT	EBR	WBL	WBT	WBR	NEL	NET	NER	SWL	SWT	SWR
Lane Configurations												
Volume (veh/h)	29	22	0	0	8	15	38	1790	19	0	0	0
Sign Control		Stop			Stop			Free			Free	
Grade		0%			0%			0%			0%	
Peak Hour Factor	0.93	0.93	0.93	0.93	0.93	0.93	0.93	0.93	0.93	0.93	0.93	0.93
Hourly flow rate (vph)	31	24	0	0	9	16	41	1925	20	0	0	0
Pedestrians												
Lane Width (ft)												
Walking Speed (ft/s)												
Percent Blockage												
Right turn flare (veh)												
Median type								None			None	
Median storage veh)												
Upstream signal (ft)												
pX, platoon unblocked												
vC, conflicting volume	744	2027	0	2028	2017	652	0			1945		
vC1, stage 1 conf vol												
vC2, stage 2 conf vol												
vCu, unblocked vol	744	2027	0	2028	2017	652	0			1945		
tC, single (s)	7.5	6.5	6.9	7.5	6.5	6.9	4.1			4.1		
tC, 2 stage (s)												
tF (s)	3.5	4.0	3.3	3.5	4.0	3.3	2.2			2.2		
p0 queue free %	88	57	100	100	85	96	97			100		
cM capacity (veh/h)	252	55	1084	22	56	411	1622			297		

Direction, Lane #	EB 1	WB 1	NE 1	NE 2	NE 3
Volume Total	55	25	522	962	502
Volume Left	31	0	41	0	0
Volume Right	0	16	0	0	20
cSH	100	129	1622	1700	1700
Volume to Capacity	0.55	0.19	0.03	0.57	0.30
Queue Length 95th (ft)	63	17	2	0	0
Control Delay (s)	78.3	39.5	0.8	0.0	0.0
Lane LOS	F	E	A		
Approach Delay (s)	78.3	39.5	0.2		
Approach LOS	F	E			

Intersection Summary			
Average Delay	2.8		
Intersection Capacity Utilization	51.9%	ICU Level of Service	A
Analysis Period (min)	15		

Movement	EBL	EBT	EBR	WBL	WBT	WBR	NEL	NET	NER	SWL	SWT	SWR
Lane Configurations												
Volume (veh/h)	0	25	0	0	3	0	1	1911	7	0	0	0
Sign Control		Stop			Stop			Free			Free	
Grade		0%			0%			0%			0%	
Peak Hour Factor	0.91	0.91	0.91	0.91	0.91	0.91	0.91	0.91	0.91	0.91	0.91	0.91
Hourly flow rate (vph)	0	27	0	0	3	0	1	2100	8	0	0	0
Pedestrians												
Lane Width (ft)												
Walking Speed (ft/s)												
Percent Blockage												
Right turn flare (veh)												
Median type								None			None	
Median storage veh)												
Upstream signal (ft)												
pX, platoon unblocked												
vC, conflicting volume	704	2110	0	2120	2106	704	0			2108		
vC1, stage 1 conf vol												
vC2, stage 2 conf vol												
vCu, unblocked vol	704	2110	0	2120	2106	704	0			2108		
tC, single (s)	7.5	6.5	6.9	7.5	6.5	6.9	4.1			4.1		
tC, 2 stage (s)												
tF (s)	3.5	4.0	3.3	3.5	4.0	3.3	2.2			2.2		
p0 queue free %	100	46	100	100	93	100	100			100		
cM capacity (veh/h)	308	50	1084	16	51	380	1622			257		

Direction, Lane #	EB 1	WB 1	NE 1	NE 2	NE 3
Volume Total	27	3	526	1050	533
Volume Left	0	0	1	0	0
Volume Right	0	0	0	0	8
cSH	50	51	1622	1700	1700
Volume to Capacity	0.54	0.07	0.00	0.62	0.31
Queue Length 95th (ft)	52	5	0	0	0
Control Delay (s)	141.3	80.9	0.0	0.0	0.0
Lane LOS	F	F	A		
Approach Delay (s)	141.3	80.9	0.0		
Approach LOS	F	F			

Intersection Summary			
Average Delay	1.9		
Intersection Capacity Utilization	47.1%	ICU Level of Service	A
Analysis Period (min)	15		

Movement	EBL	EBR	NBL	NBT	SBT	SBR
Lane Configurations						
Volume (veh/h)	1	1	1	179	209	2
Sign Control	Stop			Free	Free	
Grade	0%			0%	0%	
Peak Hour Factor	0.92	0.92	0.92	0.92	0.92	0.92
Hourly flow rate (vph)	1	1	1	195	227	2
Pedestrians						
Lane Width (ft)						
Walking Speed (ft/s)						
Percent Blockage						
Right turn flare (veh)						
Median type				None	None	
Median storage veh)						
Upstream signal (ft)						
pX, platoon unblocked						
vC, conflicting volume	425	228	229			
vC1, stage 1 conf vol						
vC2, stage 2 conf vol						
vCu, unblocked vol	425	228	229			
tC, single (s)	6.4	6.2	4.1			
tC, 2 stage (s)						
tF (s)	3.5	3.3	2.2			
p0 queue free %	100	100	100			
cM capacity (veh/h)	586	811	1339			

Direction, Lane #	EB 1	NB 1	SB 1
Volume Total	2	196	229
Volume Left	1	1	0
Volume Right	1	0	2
cSH	680	1339	1700
Volume to Capacity	0.00	0.00	0.13
Queue Length 95th (ft)	0	0	0
Control Delay (s)	10.3	0.0	0.0
Lane LOS	B	A	
Approach Delay (s)	10.3	0.0	0.0
Approach LOS	B		

Intersection Summary			
Average Delay	0.1		
Intersection Capacity Utilization	21.1%	ICU Level of Service	A
Analysis Period (min)	15		

Movement	EBL	EBR	NBL	NBT	SBT	SBR
Lane Configurations						
Volume (veh/h)	0	0	0	184	212	1
Sign Control	Stop			Free	Free	
Grade	0%			0%	0%	
Peak Hour Factor	0.92	0.92	0.92	0.92	0.92	0.92
Hourly flow rate (vph)	0	0	0	200	230	1
Pedestrians						
Lane Width (ft)						
Walking Speed (ft/s)						
Percent Blockage						
Right turn flare (veh)						
Median type				None	None	
Median storage veh)						
Upstream signal (ft)						
pX, platoon unblocked						
vC, conflicting volume	431	231	232			
vC1, stage 1 conf vol						
vC2, stage 2 conf vol						
vCu, unblocked vol	431	231	232			
tC, single (s)	6.4	6.2	4.1			
tC, 2 stage (s)						
tF (s)	3.5	3.3	2.2			
p0 queue free %	100	100	100			
cM capacity (veh/h)	581	808	1336			

Direction, Lane #	EB 1	NB 1	SB 1
Volume Total	0	200	232
Volume Left	0	0	0
Volume Right	0	0	1
cSH	1700	1336	1700
Volume to Capacity	0.00	0.00	0.14
Queue Length 95th (ft)	0	0	0
Control Delay (s)	0.0	0.0	0.0
Lane LOS	A		
Approach Delay (s)	0.0	0.0	0.0
Approach LOS	A		

Intersection Summary			
Average Delay	0.0		
Intersection Capacity Utilization	14.6%	ICU Level of Service	A
Analysis Period (min)	15		

Movement	EBL	EBR	NBL	NBT	SBT	SBR
Lane Configurations						
Volume (veh/h)	7	4	1	175	188	2
Sign Control	Stop			Free	Free	
Grade	0%			0%	0%	
Peak Hour Factor	0.92	0.92	0.92	0.92	0.92	0.92
Hourly flow rate (vph)	8	4	1	190	204	2
Pedestrians						
Lane Width (ft)						
Walking Speed (ft/s)						
Percent Blockage						
Right turn flare (veh)						
Median type				None	None	
Median storage veh)						
Upstream signal (ft)						
pX, platoon unblocked						
vC, conflicting volume	398	205	207			
vC1, stage 1 conf vol						
vC2, stage 2 conf vol						
vCu, unblocked vol	398	205	207			
tC, single (s)	6.4	6.2	4.1			
tC, 2 stage (s)						
tF (s)	3.5	3.3	2.2			
p0 queue free %	99	99	100			
cM capacity (veh/h)	607	835	1365			

Direction, Lane #	EB 1	NB 1	SB 1
Volume Total	12	191	207
Volume Left	8	1	0
Volume Right	4	0	2
cSH	674	1365	1700
Volume to Capacity	0.02	0.00	0.12
Queue Length 95th (ft)	1	0	0
Control Delay (s)	10.4	0.1	0.0
Lane LOS	B	A	
Approach Delay (s)	10.4	0.1	0.0
Approach LOS	B		

Intersection Summary			
Average Delay	0.3		
Intersection Capacity Utilization	20.0%	ICU Level of Service	A
Analysis Period (min)	15		

Movement	EBL	EBR	NBL	NBT	SBT	SBR
Lane Configurations						
Volume (veh/h)	25	26	19	139	127	14
Sign Control	Stop			Free	Free	
Grade	0%			0%	0%	
Peak Hour Factor	0.92	0.92	0.92	0.92	0.92	0.92
Hourly flow rate (vph)	27	28	21	151	138	15
Pedestrians						
Lane Width (ft)						
Walking Speed (ft/s)						
Percent Blockage						
Right turn flare (veh)						
Median type				None	None	
Median storage veh)						
Upstream signal (ft)						
pX, platoon unblocked						
vC, conflicting volume	338	146	153			
vC1, stage 1 conf vol						
vC2, stage 2 conf vol						
vCu, unblocked vol	338	146	153			
tC, single (s)	6.4	6.2	4.1			
tC, 2 stage (s)						
tF (s)	3.5	3.3	2.2			
p0 queue free %	96	97	99			
cM capacity (veh/h)	648	901	1427			

Direction, Lane #	EB 1	NB 1	SB 1
Volume Total	55	172	153
Volume Left	27	21	0
Volume Right	28	0	15
cSH	756	1427	1700
Volume to Capacity	0.07	0.01	0.09
Queue Length 95th (ft)	6	1	0
Control Delay (s)	10.1	1.0	0.0
Lane LOS	B	A	
Approach Delay (s)	10.1	1.0	0.0
Approach LOS	B		

Intersection Summary			
Average Delay	1.9		
Intersection Capacity Utilization	29.2%	ICU Level of Service	A
Analysis Period (min)	15		

Movement	EBL	EBT	EBR	WBL	WBT	WBR	NBL	NBT	NBR	SBL	SBT	SBR
Lane Configurations												
Sign Control		Stop			Stop			Stop			Stop	
Volume (vph)	3	103	39	33	142	1	30	143	14	2	1	4
Peak Hour Factor	0.92	0.92	0.92	0.92	0.92	0.92	0.92	0.92	0.92	0.92	0.92	0.92
Hourly flow rate (vph)	3	112	42	36	154	1	33	155	15	2	1	4

Direction, Lane #	EB 1	WB 1	NB 1	SB 1
Volume Total (vph)	158	191	203	8
Volume Left (vph)	3	36	33	2
Volume Right (vph)	42	1	15	4
Hadj (s)	-0.12	0.07	0.02	-0.25
Departure Headway (s)	4.5	4.7	4.8	4.8
Degree Utilization, x	0.20	0.25	0.27	0.01
Capacity (veh/h)	751	726	712	675
Control Delay (s)	8.7	9.2	9.5	7.8
Approach Delay (s)	8.7	9.2	9.5	7.8
Approach LOS	A	A	A	A

Intersection Summary			
Delay	9.2		
HCM Level of Service	A		
Intersection Capacity Utilization	38.8%	ICU Level of Service	A
Analysis Period (min)	15		

HCM Unsignalized Intersection Capacity Analysis
1: SW 97th Ave. & SW 174th St.

2/11/2015

Movement	EBL	EBT	EBR	WBL	WBT	WBR	NBL	NBT	NBR	SBL	SBT	SBR
Lane Configurations												
Sign Control		Stop			Stop			Stop			Stop	
Volume (vph)	4	135	26	28	100	0	21	14	11	1	0	1
Peak Hour Factor	0.84	0.84	0.84	0.84	0.84	0.84	0.84	0.84	0.84	0.84	0.84	0.84
Hourly flow rate (vph)	5	161	31	33	119	0	25	17	13	1	0	1

Direction, Lane #	EB 1	WB 1	NB 1	SB 1
Volume Total (vph)	196	152	55	2
Volume Left (vph)	5	33	25	1
Volume Right (vph)	31	0	13	1
Hadj (s)	-0.06	0.08	-0.02	-0.17
Departure Headway (s)	4.1	4.3	4.6	4.6
Degree Utilization, x	0.23	0.18	0.07	0.00
Capacity (veh/h)	850	816	718	716
Control Delay (s)	8.3	8.3	8.0	7.6
Approach Delay (s)	8.3	8.3	8.0	7.6
Approach LOS	A	A	A	A

Intersection Summary			
Delay	8.3		
HCM Level of Service	A		
Intersection Capacity Utilization	29.0%	ICU Level of Service	A
Analysis Period (min)	15		

Lane Group	EBL	NBT	SBT	NET
Lane Group Flow (vph)	89	281	10	4099
v/c Ratio	1.05	1.15	0.07	1.08
Control Delay	183.5	151.1	69.1	63.6
Queue Delay	0.0	0.0	0.0	0.0
Total Delay	183.5	151.1	69.1	63.6
Queue Length 50th (ft)	~107	~293	10	~1858
Queue Length 95th (ft)	#211	#438	30	#1648
Internal Link Dist (ft)	257	1041	665	1300
Turn Bay Length (ft)				
Base Capacity (vph)	85	244	142	3799
Starvation Cap Reductn	0	0	0	0
Spillback Cap Reductn	0	0	0	0
Storage Cap Reductn	0	0	0	0
Reduced v/c Ratio	1.05	1.15	0.07	1.08

Intersection Summary

~ Volume exceeds capacity, queue is theoretically infinite.
Queue shown is maximum after two cycles.

95th percentile volume exceeds capacity, queue may be longer.
Queue shown is maximum after two cycles.

Movement	EBL	EBR	NBL	NBT	NBR	SBL	SBT	NEL2	NEL	NET	NER
Lane Configurations											
Volume (vph)	1	74	3	11	222	3	5	1	2	3434	7
Ideal Flow (vphpl)	1900	1900	1900	1900	1900	1900	1900	1900	1900	1900	1900
Total Lost time (s)	5.0			5.0			5.0			5.0	
Lane Util. Factor	1.00			1.00			1.00			0.91	
Frt	0.87			0.87			1.00			1.00	
Flt Protected	1.00			1.00			0.98			1.00	
Satd. Flow (prot)	1613			1625			1826			5084	
Flt Permitted	1.00			1.00			0.68			1.00	
Satd. Flow (perm)	1613			1622			1273			5084	
Peak-hour factor, PHF	0.84	0.84	0.84	0.84	0.84	0.84	0.84	0.84	0.84	0.84	0.84
Adj. Flow (vph)	1	88	4	13	264	4	6	1	2	4088	8
RTOR Reduction (vph)	0	0	0	63	0	0	0	0	0	0	0
Lane Group Flow (vph)	89	0	0	218	0	0	10	0	0	4099	0
Turn Type	NA		Perm	NA		Perm	NA	Perm	Perm	NA	
Protected Phases	3			4			8			6	
Permitted Phases			4			8		6	6		
Actuated Green, G (s)	9.0			19.0			19.0			127.0	
Effective Green, g (s)	9.0			19.0			19.0			127.0	
Actuated g/C Ratio	0.05			0.11			0.11			0.75	
Clearance Time (s)	5.0			5.0			5.0			5.0	
Vehicle Extension (s)	3.0			3.0			3.0			3.0	
Lane Grp Cap (vph)	85			181			142			3798	
v/s Ratio Prot	c0.06										
v/s Ratio Perm				c0.13			0.01			0.81	
v/c Ratio	1.05			1.20			0.07			1.08	
Uniform Delay, d1	80.5			75.5			67.6			21.5	
Progression Factor	1.00			1.00			1.00			1.00	
Incremental Delay, d2	111.0			132.5			1.0			41.2	
Delay (s)	191.5			208.0			68.6			62.7	
Level of Service	F			F			E			E	
Approach Delay (s)	191.5			208.0			68.6			62.7	
Approach LOS	F			F			E			E	

Intersection Summary			
HCM Average Control Delay	74.4	HCM Level of Service	E
HCM Volume to Capacity ratio	1.09		
Actuated Cycle Length (s)	170.0	Sum of lost time (s)	15.0
Intersection Capacity Utilization	99.4%	ICU Level of Service	F
Analysis Period (min)	15		
c Critical Lane Group			

Movement	EBL	EBR	NBL	NBT	SBT	SBR
Lane Configurations						
Volume (veh/h)	9	33	36	248	44	0
Sign Control	Stop			Free	Free	
Grade	0%			0%	0%	
Peak Hour Factor	0.90	0.90	0.90	0.90	0.90	0.90
Hourly flow rate (vph)	10	37	40	276	49	0
Pedestrians						
Lane Width (ft)						
Walking Speed (ft/s)						
Percent Blockage						
Right turn flare (veh)						
Median type				None	None	
Median storage veh)						
Upstream signal (ft)					1121	
pX, platoon unblocked						
vC, conflicting volume	404	49	49			
vC1, stage 1 conf vol						
vC2, stage 2 conf vol						
vCu, unblocked vol	404	49	49			
tC, single (s)	6.4	6.2	4.1			
tC, 2 stage (s)						
tF (s)	3.5	3.3	2.2			
p0 queue free %	98	96	97			
cM capacity (veh/h)	587	1020	1558			

Direction, Lane #	EB 1	NB 1	SB 1
Volume Total	47	316	49
Volume Left	10	40	0
Volume Right	37	0	0
cSH	881	1558	1700
Volume to Capacity	0.05	0.03	0.03
Queue Length 95th (ft)	4	2	0
Control Delay (s)	9.3	1.1	0.0
Lane LOS	A	A	
Approach Delay (s)	9.3	1.1	0.0
Approach LOS	A		

Intersection Summary			
Average Delay	1.9		
Intersection Capacity Utilization	31.7%	ICU Level of Service	A
Analysis Period (min)	15		

Movement	WBL	WBR	NBT	NBR	SBL	SBT
Lane Configurations						
Volume (veh/h)	20	25	260	14	6	50
Sign Control	Stop		Free			Free
Grade	0%		0%			0%
Peak Hour Factor	0.89	0.89	0.89	0.89	0.89	0.89
Hourly flow rate (vph)	22	28	292	16	7	56
Pedestrians						
Lane Width (ft)						
Walking Speed (ft/s)						
Percent Blockage						
Right turn flare (veh)						
Median type			None			None
Median storage veh)						
Upstream signal (ft)						
pX, platoon unblocked						
vC, conflicting volume	370	300			308	
vC1, stage 1 conf vol						
vC2, stage 2 conf vol						
vCu, unblocked vol	370	300			308	
tC, single (s)	6.4	6.2			4.1	
tC, 2 stage (s)						
tF (s)	3.5	3.3			2.2	
p0 queue free %	96	96			99	
cM capacity (veh/h)	627	740			1253	

Direction, Lane #	WB 1	NB 1	SB 1
Volume Total	51	308	63
Volume Left	22	0	7
Volume Right	28	16	0
cSH	685	1700	1253
Volume to Capacity	0.07	0.18	0.01
Queue Length 95th (ft)	6	0	0
Control Delay (s)	10.7	0.0	0.9
Lane LOS	B		A
Approach Delay (s)	10.7	0.0	0.9
Approach LOS	B		

Intersection Summary			
Average Delay	1.4		
Intersection Capacity Utilization	24.5%	ICU Level of Service	A
Analysis Period (min)	15		

Movement	EBL	EBR	NBL	NBT	SBT	SBR
Lane Configurations						
Volume (veh/h)	6	23	17	292	69	0
Sign Control	Stop			Free	Free	
Grade	0%			0%	0%	
Peak Hour Factor	0.95	0.95	0.95	0.95	0.95	0.95
Hourly flow rate (vph)	6	24	18	307	73	0
Pedestrians						
Lane Width (ft)						
Walking Speed (ft/s)						
Percent Blockage						
Right turn flare (veh)						
Median type				None	None	
Median storage veh)						
Upstream signal (ft)				1230		
pX, platoon unblocked						
vC, conflicting volume	416	73	73			
vC1, stage 1 conf vol						
vC2, stage 2 conf vol						
vCu, unblocked vol	416	73	73			
tC, single (s)	6.4	6.2	4.1			
tC, 2 stage (s)						
tF (s)	3.5	3.3	2.2			
p0 queue free %	99	98	99			
cM capacity (veh/h)	586	989	1527			

Direction, Lane #	EB 1	NB 1	SB 1
Volume Total	31	325	73
Volume Left	6	18	0
Volume Right	24	0	0
cSH	866	1527	1700
Volume to Capacity	0.04	0.01	0.04
Queue Length 95th (ft)	3	1	0
Control Delay (s)	9.3	0.5	0.0
Lane LOS	A	A	
Approach Delay (s)	9.3	0.5	0.0
Approach LOS	A		

Intersection Summary			
Average Delay	1.0		
Intersection Capacity Utilization	33.0%	ICU Level of Service	A
Analysis Period (min)	15		

Movement	EBL	EBT	EBR	WBL	WBT	WBR	NBL	NBT	NBR	SBL	SBT	SBR
Lane Configurations												
Volume (veh/h)	12	3	8	3	9	16	11	284	0	4	77	7
Sign Control		Stop			Stop			Free			Free	
Grade		0%			0%			0%			0%	
Peak Hour Factor	0.93	0.93	0.93	0.93	0.93	0.93	0.93	0.93	0.93	0.93	0.93	0.93
Hourly flow rate (vph)	13	3	9	3	10	17	12	305	0	4	83	8
Pedestrians												
Lane Width (ft)												
Walking Speed (ft/s)												
Percent Blockage												
Right turn flare (veh)												
Median type								None			None	
Median storage veh)												
Upstream signal (ft)								904				
pX, platoon unblocked	0.96	0.96		0.96	0.96	0.96				0.96		
vC, conflicting volume	446	424	87	434	428	305	90			305		
vC1, stage 1 conf vol												
vC2, stage 2 conf vol												
vCu, unblocked vol	400	377	87	388	381	253	90			253		
tC, single (s)	7.1	6.5	6.2	7.1	6.5	6.2	4.1			4.1		
tC, 2 stage (s)												
tF (s)	3.5	4.0	3.3	3.5	4.0	3.3	2.2			2.2		
p0 queue free %	97	99	99	99	98	98	99			100		
cM capacity (veh/h)	513	525	972	535	523	753	1505			1257		

Direction, Lane #	EB 1	WB 1	NB 1	SB 1
Volume Total	25	30	317	95
Volume Left	13	3	12	4
Volume Right	9	17	0	8
cSH	616	635	1505	1257
Volume to Capacity	0.04	0.05	0.01	0.00
Queue Length 95th (ft)	3	4	1	0
Control Delay (s)	11.1	11.0	0.3	0.4
Lane LOS	B	B	A	A
Approach Delay (s)	11.1	11.0	0.3	0.4
Approach LOS	B	B		

Intersection Summary			
Average Delay	1.6		
Intersection Capacity Utilization	29.7%	ICU Level of Service	A
Analysis Period (min)	15		

Movement	EBL	EBT	EBR	WBL	WBT	WBR	NBL	NBT	NBR	SBL	SBT	SBR
Lane Configurations												
Volume (veh/h)	6	1	2	0	4	1	2	288	2	0	79	6
Sign Control		Stop			Stop			Free			Free	
Grade		0%			0%			0%			0%	
Peak Hour Factor	0.91	0.91	0.91	0.91	0.91	0.91	0.91	0.91	0.91	0.91	0.91	0.91
Hourly flow rate (vph)	7	1	2	0	4	1	2	316	2	0	87	7
Pedestrians												
Lane Width (ft)												
Walking Speed (ft/s)												
Percent Blockage												
Right turn flare (veh)												
Median type								None			None	
Median storage veh)												
Upstream signal (ft)								601				
pX, platoon unblocked	0.90	0.90		0.90	0.90	0.90				0.90		
vC, conflicting volume	415	413	90	415	415	318	93			319		
vC1, stage 1 conf vol												
vC2, stage 2 conf vol												
vCu, unblocked vol	296	293	90	295	296	187	93			188		
tC, single (s)	7.1	6.5	6.2	7.1	6.5	6.2	4.1			4.1		
tC, 2 stage (s)												
tF (s)	3.5	4.0	3.3	3.5	4.0	3.3	2.2			2.2		
p0 queue free %	99	100	100	100	99	100	100			100		
cM capacity (veh/h)	586	555	968	589	554	770	1501			1248		

Direction, Lane #	EB 1	WB 1	NB 1	SB 1
Volume Total	10	5	321	93
Volume Left	7	0	2	0
Volume Right	2	1	2	7
cSH	638	587	1501	1248
Volume to Capacity	0.02	0.01	0.00	0.00
Queue Length 95th (ft)	1	1	0	0
Control Delay (s)	10.7	11.2	0.1	0.0
Lane LOS	B	B	A	
Approach Delay (s)	10.7	11.2	0.1	0.0
Approach LOS	B	B		

Intersection Summary			
Average Delay	0.4		
Intersection Capacity Utilization	29.2%	ICU Level of Service	A
Analysis Period (min)	15		

Movement	EBL	EBT	EBR	WBL	WBT	WBR	NBL	NBT	NBR	SBL	SBT	SBR
Lane Configurations												
Volume (veh/h)	2	3	32	0	1	1	17	280	3	1	77	7
Sign Control		Stop			Stop			Free			Free	
Grade		0%			0%			0%			0%	
Peak Hour Factor	0.94	0.94	0.94	0.94	0.94	0.94	0.94	0.94	0.94	0.94	0.94	0.94
Hourly flow rate (vph)	2	3	34	0	1	1	18	298	3	1	82	7
Pedestrians												
Lane Width (ft)												
Walking Speed (ft/s)												
Percent Blockage												
Right turn flare (veh)												
Median type								None			None	
Median storage veh)												
Upstream signal (ft)								300				
pX, platoon unblocked	0.85	0.85		0.85	0.85	0.85				0.85		
vC, conflicting volume	425	425	86	459	427	299	89			301		
vC1, stage 1 conf vol												
vC2, stage 2 conf vol												
vCu, unblocked vol	242	242	86	281	244	95	89			97		
tC, single (s)	7.1	6.5	6.2	7.1	6.5	6.2	4.1			4.1		
tC, 2 stage (s)												
tF (s)	3.5	4.0	3.3	3.5	4.0	3.3	2.2			2.2		
p0 queue free %	100	99	97	100	100	100	99			100		
cM capacity (veh/h)	601	557	973	545	555	822	1506			1279		

Direction, Lane #	EB 1	WB 1	NB 1	SB 1
Volume Total	39	2	319	90
Volume Left	2	0	18	1
Volume Right	34	1	3	7
cSH	889	662	1506	1279
Volume to Capacity	0.04	0.00	0.01	0.00
Queue Length 95th (ft)	3	0	1	0
Control Delay (s)	9.2	10.5	0.5	0.1
Lane LOS	A	B	A	A
Approach Delay (s)	9.2	10.5	0.5	0.1
Approach LOS	A	B		

Intersection Summary			
Average Delay	1.2		
Intersection Capacity Utilization	33.2%	ICU Level of Service	A
Analysis Period (min)	15		

Lane Group	EBL	EBT	EBR	WBL	WBT	NBL	NBT	SBL	SBT
Lane Group Flow (vph)	51	444	117	152	604	231	599	16	78
v/c Ratio	0.11	0.75	0.24	0.34	0.48	0.42	0.68	0.04	0.12
Control Delay	14.2	39.0	7.6	16.4	27.5	24.2	29.6	19.9	35.1
Queue Delay	0.0	0.0	0.0	0.0	0.0	0.0	0.0	0.0	0.0
Total Delay	14.2	39.0	7.6	16.4	27.5	24.2	29.6	19.9	35.1
Queue Length 50th (ft)	14	205	0	46	154	104	128	6	22
Queue Length 95th (ft)	39	356	45	97	240	172	194	20	44
Internal Link Dist (ft)		1915			531		229		156
Turn Bay Length (ft)	130			95		155		130	
Base Capacity (vph)	518	708	583	441	1472	547	1039	388	820
Starvation Cap Reductn	0	0	0	0	0	0	0	0	0
Spillback Cap Reductn	0	0	0	0	0	0	0	0	0
Storage Cap Reductn	0	0	0	0	0	0	0	0	0
Reduced v/c Ratio	0.10	0.63	0.20	0.34	0.41	0.42	0.58	0.04	0.10

Intersection Summary

Movement	EBL	EBT	EBR	WBL	WBT	WBR	NBL	NBT	NBR	SBL	SBT	SBR
Lane Configurations												
Volume (vph)	48	422	111	144	517	57	219	293	276	15	72	2
Ideal Flow (vphpl)	1900	1900	1900	1900	1900	1900	1900	1900	1900	1900	1900	1900
Total Lost time (s)	3.0	3.0	5.0	3.0	3.0		3.0	3.0		3.0	3.0	
Lane Util. Factor	1.00	1.00	1.00	1.00	0.95		1.00	0.95		1.00	0.95	
Frt	1.00	1.00	0.85	1.00	0.99		1.00	0.93		1.00	1.00	
Flt Protected	0.95	1.00	1.00	0.95	1.00		0.95	1.00		0.95	1.00	
Satd. Flow (prot)	1770	1863	1583	1770	3486		1770	3281		1770	3526	
Flt Permitted	0.36	1.00	1.00	0.40	1.00		0.70	1.00		0.36	1.00	
Satd. Flow (perm)	680	1863	1583	743	3486		1311	3281		673	3526	
Peak-hour factor, PHF	0.95	0.95	0.95	0.95	0.95	0.95	0.95	0.95	0.95	0.95	0.95	0.95
Adj. Flow (vph)	51	444	117	152	544	60	231	308	291	16	76	2
RTOR Reduction (vph)	0	0	88	0	7	0	0	149	0	0	2	0
Lane Group Flow (vph)	51	444	29	152	597	0	231	450	0	16	76	0
Turn Type	custom	NA	custom	custom	NA		custom	NA		custom	NA	
Protected Phases	1 2	2 4		1 3	3 4		5 6	6 8		5 7	7 8	
Permitted Phases	4		4	4			8			8		
Actuated Green, G (s)	40.9	29.9	25.7	38.9	33.9		32.9	18.4		26.4	17.9	
Effective Green, g (s)	40.9	29.9	25.7	38.9	33.9		32.9	18.4		26.4	17.9	
Actuated g/C Ratio	0.40	0.29	0.25	0.38	0.33		0.32	0.18		0.26	0.17	
Clearance Time (s)			5.0									
Vehicle Extension (s)			3.0									
Lane Grp Cap (vph)	432	542	396	413	1151		508	588		314	615	
v/s Ratio Prot	0.02	c0.24		c0.05	c0.17		c0.09	c0.14		0.01	c0.02	
v/s Ratio Perm	0.03		0.02	0.09			0.06			0.01		
v/c Ratio	0.12	0.82	0.07	0.37	0.52		0.45	0.77		0.05	0.12	
Uniform Delay, d1	19.2	33.9	29.4	21.9	27.8		27.3	40.1		28.6	35.8	
Progression Factor	1.00	1.00	1.00	1.00	1.00		1.00	1.00		1.00	1.00	
Incremental Delay, d2	0.1	9.4	0.1	0.6	0.4		0.6	5.9		0.1	0.1	
Delay (s)	19.3	43.3	29.5	22.4	28.2		27.9	46.0		28.7	35.9	
Level of Service	B	D	C	C	C		C	D		C	D	
Approach Delay (s)		38.6			27.0			41.0			34.7	
Approach LOS		D			C			D			C	

Intersection Summary			
HCM Average Control Delay	35.5	HCM Level of Service	D
HCM Volume to Capacity ratio	0.64		
Actuated Cycle Length (s)	102.7	Sum of lost time (s)	24.0
Intersection Capacity Utilization	59.0%	ICU Level of Service	B
Analysis Period (min)	15		
c Critical Lane Group			

Movement	EBL	EBT	WBT	WBR	SBL	SBR
Lane Configurations						
Volume (veh/h)	282	548	687	30	21	76
Sign Control		Free	Free		Stop	
Grade		0%	0%		0%	
Peak Hour Factor	0.88	0.88	0.88	0.88	0.88	0.88
Hourly flow rate (vph)	320	623	781	34	24	86
Pedestrians						
Lane Width (ft)						
Walking Speed (ft/s)						
Percent Blockage						
Right turn flare (veh)						
Median type		None	None			
Median storage veh)						
Upstream signal (ft)		611				
pX, platoon unblocked					0.85	
vC, conflicting volume	815				2061	798
vC1, stage 1 conf vol						
vC2, stage 2 conf vol						
vCu, unblocked vol	815				2158	798
tC, single (s)	4.1				6.4	6.2
tC, 2 stage (s)						
tF (s)	2.2				3.5	3.3
p0 queue free %	61				12	78
cM capacity (veh/h)	813				27	386

Direction, Lane #	EB 1	EB 2	WB 1	SB 1
Volume Total	320	623	815	110
Volume Left	320	0	0	24
Volume Right	0	0	34	86
cSH	813	1700	1700	100
Volume to Capacity	0.39	0.37	0.48	1.11
Queue Length 95th (ft)	47	0	0	178
Control Delay (s)	12.3	0.0	0.0	201.6
Lane LOS	B			F
Approach Delay (s)	4.2		0.0	201.6
Approach LOS				F

Intersection Summary			
Average Delay	14.0		
Intersection Capacity Utilization	69.4%	ICU Level of Service	C
Analysis Period (min)	15		

Lane Group	EBL	EBT	WBL	WBT	NBL	NBT	SBL	SBT
Lane Group Flow (vph)	464	578	182	626	68	2255	133	1703
v/c Ratio	1.04	0.65	0.64	1.05	0.55	1.08	0.96	0.81
Control Delay	112.1	60.7	76.4	115.4	42.2	91.8	105.0	46.7
Queue Delay	0.0	0.0	0.0	0.0	0.0	0.0	0.0	0.0
Total Delay	112.1	60.7	76.4	115.4	42.2	91.8	105.0	46.7
Queue Length 50th (ft)	~554	305	209	~414	39	~1023	98	605
Queue Length 95th (ft)	#699	344	286	#490	69	#973	#216	600
Internal Link Dist (ft)		364		1915		469		768
Turn Bay Length (ft)			286		160		130	
Base Capacity (vph)	448	894	284	597	128	2089	138	2113
Starvation Cap Reductn	0	0	0	0	0	0	0	0
Spillback Cap Reductn	0	0	0	0	0	0	0	0
Storage Cap Reductn	0	0	0	0	0	0	0	0
Reduced v/c Ratio	1.04	0.65	0.64	1.05	0.53	1.08	0.96	0.81

Intersection Summary

~ Volume exceeds capacity, queue is theoretically infinite.
Queue shown is maximum after two cycles.

95th percentile volume exceeds capacity, queue may be longer.
Queue shown is maximum after two cycles.

Movement	EBL	EBT	EBR	WBL	WBT	WBR	NBL	NBT	NBR	SBL	SBT	SBR
Lane Configurations												
Volume (vph)	390	481	4	170	502	7	57	1851	43	112	1296	134
Ideal Flow (vphpl)	1900	1900	1900	1900	1900	1900	1900	1900	1900	1900	1900	1900
Total Lost time (s)	5.0	5.0		5.0	5.0		3.0	5.0		3.0	5.0	
Lane Util. Factor	1.00	0.95		0.91	0.91		1.00	0.91		1.00	0.91	
Frt	1.00	1.00		1.00	1.00		1.00	1.00		1.00	0.99	
Flt Protected	0.95	1.00		0.95	1.00		0.95	1.00		0.95	1.00	
Satd. Flow (prot)	1770	3535		1610	3378		1770	5068		1770	5014	
Flt Permitted	0.95	1.00		0.95	1.00		0.06	1.00		0.06	1.00	
Satd. Flow (perm)	1770	3535		1610	3378		106	5068		104	5014	
Peak-hour factor, PHF	0.84	0.84	0.84	0.84	0.84	0.84	0.84	0.84	0.84	0.84	0.84	0.84
Adj. Flow (vph)	464	573	5	202	598	8	68	2204	51	133	1543	160
RTOR Reduction (vph)	0	0	0	0	1	0	0	1	0	0	8	0
Lane Group Flow (vph)	464	578	0	182	625	0	68	2254	0	133	1695	0
Turn Type	Split	NA		Split	NA		pm+pt	NA		pm+pt	NA	
Protected Phases	4	4		8	8		5	2		1	6	
Permitted Phases							2			6		
Actuated Green, G (s)	43.0	43.0		30.0	30.0		77.6	70.0		80.4	71.4	
Effective Green, g (s)	43.0	43.0		30.0	30.0		77.6	70.0		80.4	71.4	
Actuated g/C Ratio	0.25	0.25		0.18	0.18		0.46	0.41		0.47	0.42	
Clearance Time (s)	5.0	5.0		5.0	5.0		3.0	5.0		3.0	5.0	
Vehicle Extension (s)	3.0	3.0		3.0	3.0		3.0	3.0		3.0	3.0	
Lane Grp Cap (vph)	448	894		284	596		123	2087		137	2106	
v/s Ratio Prot	c0.26	0.16		0.11	c0.19		0.02	c0.44		c0.05	0.34	
v/s Ratio Perm							0.23			0.41		
v/c Ratio	1.04	0.65		0.64	1.05		0.55	1.08		0.97	0.81	
Uniform Delay, d1	63.5	56.7		65.0	70.0		34.1	50.0		48.7	43.2	
Progression Factor	1.00	1.00		1.00	1.00		1.00	1.00		1.00	1.00	
Incremental Delay, d2	52.0	1.6		4.9	50.3		5.3	45.2		67.6	2.3	
Delay (s)	115.5	58.3		69.9	120.3		39.3	95.2		116.3	45.5	
Level of Service	F	E		E	F		D	F		F	D	
Approach Delay (s)		83.8			109.0			93.6			50.7	
Approach LOS		F			F			F			D	

Intersection Summary			
HCM Average Control Delay	80.9	HCM Level of Service	F
HCM Volume to Capacity ratio	1.08		
Actuated Cycle Length (s)	170.0	Sum of lost time (s)	21.0
Intersection Capacity Utilization	94.3%	ICU Level of Service	F
Analysis Period (min)	15		
c Critical Lane Group			

Movement	EBL	EBT	EBR	WBL	WBT	WBR	NBL	NBT	NBR	SBL	SBT	SBR
Lane Configurations												
Volume (vph)	390	481	4	170	502	7	57	1851	43	112	1296	134
Movement Number	7	4	14	3	8	18	5	2	12	1	6	16
Initial Queue, veh	0	0	0	0	0	0	0	0	0	0	0	0
Ped-Bike Adj. Factor (A_pbT)	1.00		1.00	1.00		1.00	1.00		1.00	1.00		1.00
Parking, Bus Adj. Factors	1.00	1.00	1.00	1.00	1.00	1.00	1.00	1.00	1.00	1.00	1.00	1.00
Adj. Sat. Flow Rate, veh/h/ln	1863	1863	1863	1863	1863	1863	1863	1863	1863	1863	1863	1863
Lanes	1	2	0	1	2	0	1	3	0	1	3	0
Lane Assignment												
Capacity, veh/h	450	936	8	309	639	9	145	2111	49	137	2030	210
Proportion Arriving On Green	0.25	0.25	0.25	0.17	0.17	0.17	0.03	0.41	0.41	0.05	0.43	0.43
Movement Delay, s/veh	114.2	58.2	58.2	70.0	102.0	102.2	36.9	85.7	95.1	121.0	43.0	45.1
Movement LOS	F	E	E	E	F	F	D	F	F	F	D	D
Approach Volume, veh/h		1042			808			2323			1836	
Approach Delay, s/veh		83.2			94.1			87.5			49.3	
Approach LOS		F			F			F			D	

Timer:	1	2	3	4	5	6	7	8
Assigned Phase	1	2	8	4	5	6		
Case No	1.1	4.0	10.0	10.0	1.1	4.0		
Phase Duration (G+Y+Rc), s	12.00	75.00	34.55	48.00	8.53	78.47		
Change Period (Y+Rc), s	3.00	5.00	5.00	5.00	3.00	5.00		
Max. Allowable Headway (MAH), s	4.00	3.92	3.93	3.95	4.00	3.92		
Maximum Green Setting (Gmax), s	9.00	70.00	30.00	43.00	8.00	71.00		
Max. Queue Clearance Time (g_c+I1), s	10.66	72.00	29.28	45.00	5.74	49.26		
Green Extension Time (g_e), s	0.00	0.00	0.27	0.00	0.02	18.38		
Probability of Phase Call (p_c)	0.998	1.000	1.000	1.000	0.959	1.000		
Probability of Max Out (p_x)	1.000	1.000	1.000	1.000	1.000	0.838		

Left-Turn Movement Data					
Assigned Movement	1		3	7	5
Mvmt. Sat Flow, veh/h	1774.04		1774.04	1774.04	1774.04

Through Movement Data					
Assigned Movement		2	8	4	6
Mvmt. Sat Flow, veh/h		5113.50	3665.38	3689.40	4683.73

Right-Turn Movement Data					
Assigned Movement		12	18	14	16
Mvmt. Sat Flow, veh/h		118.53	51.09	30.67	483.83

Left Lane Group Data								
Assigned Movement	1	0	3	7	5	0	0	0
Lane Assignment	L (Pr/Pm)		L	LL (Pr/Pm)				
Lanes in Group	1	0	1	1	1	0	0	0
Group Volume (v), veh/h	133.3	0.0	202.4	464.3	67.9	0.0	0.0	0.0
Group Sat. Flow (s), veh/h/ln	1774.0	0.0	1774.0	1774.0	1774.0	0.0	0.0	0.0
Queue Serve Time (g_s), s	8.7	0.0	18.0	43.0	3.7	0.0	0.0	0.0
Cycle Queue Clear Time (g_c), s	8.7	0.0	18.0	43.0	3.7	0.0	0.0	0.0

Perm LT Sat Flow Rate (s_l), veh/h/ln	166.8	0.0	1774.0	1774.0	286.6	0.0	0.0	0.0
Shared LT Sat Flow (s_sh), veh/h/ln	0.0	0.0	0.0	0.0	0.0	0.0	0.0	0.0
Perm LT Eff. Green (g_p), s	75.5	0.0	0.0	0.0	70.0	0.0	0.0	0.0
Perm LT Serve Time (g_u), s	0.0	0.0	0.0	0.0	26.2	0.0	0.0	0.0
Perm LT Que Serve Time (g_ps), s	0.0	0.0	0.0	0.0	13.6	0.0	0.0	0.0
Time to First Blk (g_f), s	0.0	0.0	0.0	0.0	0.0	0.0	0.0	0.0
Serve Time pre Blk (g_fs), s	0.0	0.0	0.0	0.0	0.0	0.0	0.0	0.0
Proportion LT Inside Lane (P_L)	1.000	0.000	1.000	1.000	1.000	0.000	0.000	0.000
Lane Group Capacity (c), veh/h	136.6	0.0	309.2	449.9	144.6	0.0	0.0	0.0
Volume-to-Capacity Ratio (X)	0.976	0.000	0.655	1.032	0.469	0.000	0.000	0.000
Available Capacity (c_a), veh/h	136.6	0.0	313.9	449.9	170.5	0.0	0.0	0.0
Upstream Filter Factor (I)	1.000	0.000	1.000	1.000	1.000	0.000	0.000	0.000
Uniform Delay (d1), s/veh	51.6	0.0	65.2	63.3	34.5	0.0	0.0	0.0
Incremental Delay (d2), s/veh	69.4	0.0	4.7	50.9	2.4	0.0	0.0	0.0
Initial Queue Delay (d3), s/veh	0.0	0.0	0.0	0.0	0.0	0.0	0.0	0.0
Control Delay (d), s/veh	121.0	0.0	70.0	114.2	36.9	0.0	0.0	0.0
First-Term Queue (Q1), veh/ln	3.9	0.0	8.2	19.5	1.6	0.0	0.0	0.0
Second-Term Queue (Q2), veh/ln	2.6	0.0	0.4	6.4	0.1	0.0	0.0	0.0
Third-Term Queue (Q3), veh/ln	0.0	0.0	0.0	0.0	0.0	0.0	0.0	0.0
Percentile bk-of-que factor (f_B%)	1.000	0.000	1.000	1.000	1.000	0.000	0.000	0.000
Percentile Back of Queue (Q%), veh/ln	6.5	0.0	8.6	25.8	1.7	0.0	0.0	0.0
Percentile Storage Ratio (RQ%)	1.27	0.00	0.77	1.90	0.28	0.00	0.00	0.00
Initial Queue (Qb), veh	0.0	0.0	0.0	0.0	0.0	0.0	0.0	0.0
Final (Residual) Queue (Qe), veh	0.0	0.0	0.0	3.6	0.0	0.0	0.0	0.0
Saturated Delay (ds), s/veh	0.0	0.0	0.0	0.0	0.0	0.0	0.0	0.0
Saturated Queue (Qs), veh	0.0	0.0	0.0	0.0	0.0	0.0	0.0	0.0
Saturated Capacity (cs), veh/h	0.0	0.0	0.0	0.0	0.0	0.0	0.0	0.0
Initial Queue Clear Time (tc), h	0.0	0.0	0.0	0.3	0.0	0.0	0.0	0.0
Middle Lane Group Data								
Assigned Movement	0	2	8	4	0	6	0	0
Lane Assignment		T	T	T		T		
Lanes in Group	0	2	1	1	0	2	0	0
Group Volume (v), veh/h	0.0	1459.3	303.6	289.0	0.0	1116.4	0.0	0.0
Group Sat. Flow (s), veh/h/ln	0.0	1695.1	1862.7	1862.7	0.0	1695.1	0.0	0.0
Queue Serve Time (g_s), s	0.0	70.0	27.3	23.2	0.0	47.2	0.0	0.0
Cycle Queue Clear Time (g_c), s	0.0	70.0	27.3	23.2	0.0	47.2	0.0	0.0
Lane Group Capacity (c), veh/h	0.0	1399.7	324.7	472.4	0.0	1469.1	0.0	0.0
Volume-to-Capacity Ratio (X)	0.000	1.043	0.935	0.612	0.000	0.760	0.000	0.000
Available Capacity (c_a), veh/h	0.0	1399.7	329.6	472.4	0.0	1469.1	0.0	0.0
Upstream Filter Factor (I)	0.000	1.000	1.000	1.000	0.000	1.000	0.000	0.000
Uniform Delay (d1), s/veh	0.0	49.8	69.1	55.9	0.0	40.6	0.0	0.0
Incremental Delay (d2), s/veh	0.0	36.0	32.9	2.3	0.0	2.4	0.0	0.0
Initial Queue Delay (d3), s/veh	0.0	0.0	0.0	0.0	0.0	0.0	0.0	0.0
Control Delay (d), s/veh	0.0	85.7	102.0	58.2	0.0	43.0	0.0	0.0
First-Term Queue (Q1), veh/ln	0.0	29.5	13.1	11.0	0.0	19.8	0.0	0.0
Second-Term Queue (Q2), veh/ln	0.0	7.0	3.0	0.3	0.0	0.5	0.0	0.0
Third-Term Queue (Q3), veh/ln	0.0	0.0	0.0	0.0	0.0	0.0	0.0	0.0
Percentile bk-of-que factor (f_B%)	0.000	1.000	1.000	1.000	0.000	1.000	0.000	0.000
Percentile Back of Queue (Q%), veh/ln	0.0	36.5	16.0	11.3	0.0	20.3	0.0	0.0
Percentile Storage Ratio (RQ%)	0.00	2.03	0.22	0.84	0.00	0.70	0.00	0.00

Initial Queue (Qb), veh	0.0	0.0	0.0	0.0	0.0	0.0	0.0	0.0
Final (Residual) Queue (Qe), veh	0.0	14.9	0.0	0.0	0.0	0.0	0.0	0.0
Saturated Delay (ds), s/veh	0.0	0.0	0.0	0.0	0.0	0.0	0.0	0.0
Saturated Queue (Qs), veh	0.0	0.0	0.0	0.0	0.0	0.0	0.0	0.0
Saturated Capacity (cs), veh/h	0.0	0.0	0.0	0.0	0.0	0.0	0.0	0.0
Initial Queue Clear Time (tc), h	0.0	0.3	0.0	0.0	0.0	0.0	0.0	0.0

Right Lane Group Data								
Assigned Movement	0	12	18	14	0	16	0	0
Lane Assignment		T+R	T+R	T+R		T+R		
Lanes in Group	0	1	1	1	0	1	0	0
Group Volume (v), veh/h	0.0	795.5	302.3	288.3	0.0	586.0	0.0	0.0
Group Sat. Flow (s), veh/h/ln	0.0	1841.8	1853.7	1857.3	0.0	1777.4	0.0	0.0
Queue Serve Time (g_s), s	0.0	70.0	27.3	23.3	0.0	47.3	0.0	0.0
Cycle Queue Clear Time (g_c), s	0.0	70.0	27.3	23.3	0.0	47.3	0.0	0.0
Prot RT Sat Flow Rate (s_R), veh/h/ln	0.0	0.0	0.0	0.0	0.0	0.0	0.0	0.0
Prot RT Eff. Green (g_R), s	0.0	0.0	0.0	0.0	0.0	0.0	0.0	0.0
Proportion RT Outside Lane (P_R)	0.000	0.064	0.028	0.017	0.000	0.272	0.000	0.000
Lane Group Capacity (c), veh/h	0.0	760.4	323.1	471.0	0.0	770.2	0.0	0.0
Volume-to-Capacity Ratio (X)	0.000	1.046	0.936	0.612	0.000	0.761	0.000	0.000
Available Capacity (c_a), veh/h	0.0	760.4	328.0	471.0	0.0	770.2	0.0	0.0
Upstream Filter Factor (I)	0.000	1.000	1.000	1.000	0.000	1.000	0.000	0.000
Uniform Delay (d1), s/veh	0.0	49.8	69.1	55.9	0.0	40.6	0.0	0.0
Incremental Delay (d2), s/veh	0.0	45.3	33.2	2.3	0.0	4.5	0.0	0.0
Initial Queue Delay (d3), s/veh	0.0	0.0	0.0	0.0	0.0	0.0	0.0	0.0
Control Delay (d), s/veh	0.0	95.1	102.2	58.2	0.0	45.1	0.0	0.0
First-Term Queue (Q1), veh/ln	0.0	32.1	13.0	11.0	0.0	20.8	0.0	0.0
Second-Term Queue (Q2), veh/ln	0.0	9.6	3.0	0.3	0.0	1.0	0.0	0.0
Third-Term Queue (Q3), veh/ln	0.0	0.0	0.0	0.0	0.0	0.0	0.0	0.0
Percentile bk-of-que factor (f_B%)	0.000	1.000	1.000	1.000	0.000	1.000	0.000	0.000
Percentile Back of Queue (Q%), veh/ln	0.0	41.7	16.0	11.3	0.0	21.8	0.0	0.0
Percentile Storage Ratio (RQ%)	0.00	2.32	0.22	0.83	0.00	0.75	0.00	0.00
Initial Queue (Qb), veh	0.0	0.0	0.0	0.0	0.0	0.0	0.0	0.0
Final (Residual) Queue (Qe), veh	0.0	8.8	0.0	0.0	0.0	0.0	0.0	0.0
Saturated Delay (ds), s/veh	0.0	0.0	0.0	0.0	0.0	0.0	0.0	0.0
Saturated Queue (Qs), veh	0.0	0.0	0.0	0.0	0.0	0.0	0.0	0.0
Saturated Capacity (cs), veh/h	0.0	0.0	0.0	0.0	0.0	0.0	0.0	0.0
Initial Queue Clear Time (tc), h	0.0	0.3	0.0	0.0	0.0	0.0	0.0	0.0

Intersection Summary	
HCM Average Control Delay	76.0
HCM Level of Service	E

Movement	EBL	EBT	EBR	WBL	WBT	WBR	NEL	NET	NER	SWL	SWT	SWR
Lane Configurations												
Volume (veh/h)	14	4	0	0	6	10	36	2559	21	0	0	0
Sign Control		Stop			Stop			Free			Free	
Grade		0%			0%			0%			0%	
Peak Hour Factor	0.96	0.96	0.96	0.96	0.96	0.96	0.96	0.96	0.96	0.96	0.96	0.96
Hourly flow rate (vph)	15	4	0	0	6	10	38	2666	22	0	0	0
Pedestrians												
Lane Width (ft)												
Walking Speed (ft/s)												
Percent Blockage												
Right turn flare (veh)												
Median type								None			None	
Median storage veh)												
Upstream signal (ft)												
pX, platoon unblocked												
vC, conflicting volume	977	2762	0	2754	2752	899	0			2688		
vC1, stage 1 conf vol												
vC2, stage 2 conf vol												
vCu, unblocked vol	977	2762	0	2754	2752	899	0			2688		
tC, single (s)	7.5	6.5	6.9	7.5	6.5	6.9	4.1			4.1		
tC, 2 stage (s)												
tF (s)	3.5	4.0	3.3	3.5	4.0	3.3	2.2			2.2		
p0 queue free %	90	78	100	100	67	96	98			100		
cM capacity (veh/h)	145	19	1084	8	19	282	1622			151		

Direction, Lane #	EB 1	WB 1	NE 1	NE 2	NE 3
Volume Total	19	17	704	1333	688
Volume Left	15	0	38	0	0
Volume Right	0	10	0	0	22
cSH	58	46	1622	1700	1700
Volume to Capacity	0.32	0.37	0.02	0.78	0.40
Queue Length 95th (ft)	29	32	2	0	0
Control Delay (s)	94.4	123.9	0.6	0.0	0.0
Lane LOS	F	F	A		
Approach Delay (s)	94.4	123.9	0.2		
Approach LOS	F	F			

Intersection Summary			
Average Delay	1.6		
Intersection Capacity Utilization	65.0%	ICU Level of Service	C
Analysis Period (min)	15		

Movement	EBL	EBT	EBR	WBL	WBT	WBR	NEL	NET	NER	SWL	SWT	SWR
Lane Configurations												
Volume (veh/h)	2	11	0	0	11	12	5	2581	23	0	0	0
Sign Control		Stop			Stop			Free			Free	
Grade		0%			0%			0%			0%	
Peak Hour Factor	0.93	0.93	0.93	0.93	0.93	0.93	0.93	0.93	0.93	0.93	0.93	0.93
Hourly flow rate (vph)	2	12	0	0	12	13	5	2775	25	0	0	0
Pedestrians												
Lane Width (ft)												
Walking Speed (ft/s)												
Percent Blockage												
Right turn flare (veh)												
Median type								None			None	
Median storage veh)												
Upstream signal (ft)												
pX, platoon unblocked												
vC, conflicting volume	955	2811	0	2804	2798	937	0			2800		
vC1, stage 1 conf vol												
vC2, stage 2 conf vol												
vCu, unblocked vol	955	2811	0	2804	2798	937	0			2800		
tC, single (s)	7.5	6.5	6.9	7.5	6.5	6.9	4.1			4.1		
tC, 2 stage (s)												
tF (s)	3.5	4.0	3.3	3.5	4.0	3.3	2.2			2.2		
p0 queue free %	98	33	100	100	35	95	100			100		
cM capacity (veh/h)	96	18	1084	4	18	266	1622			136		

Direction, Lane #	EB 1	WB 1	NE 1	NE 2	NE 3
Volume Total	14	25	699	1388	719
Volume Left	2	0	5	0	0
Volume Right	0	13	0	0	25
cSH	20	35	1622	1700	1700
Volume to Capacity	0.69	0.70	0.00	0.82	0.42
Queue Length 95th (ft)	48	62	0	0	0
Control Delay (s)	357.3	232.3	0.1	0.0	0.0
Lane LOS	F	F	A		
Approach Delay (s)	357.3	232.3	0.0		
Approach LOS	F	F			

Intersection Summary			
Average Delay	3.8		
Intersection Capacity Utilization	60.5%	ICU Level of Service	B
Analysis Period (min)	15		

Movement	EBL	EBR	NBL	NBT	SBT	SBR
Lane Configurations						
Volume (veh/h)	2	0	2	280	78	2
Sign Control	Stop			Free	Free	
Grade	0%			0%	0%	
Peak Hour Factor	0.92	0.92	0.92	0.92	0.92	0.92
Hourly flow rate (vph)	2	0	2	304	85	2
Pedestrians						
Lane Width (ft)						
Walking Speed (ft/s)						
Percent Blockage						
Right turn flare (veh)						
Median type				None	None	
Median storage veh)						
Upstream signal (ft)						
pX, platoon unblocked						
vC, conflicting volume	395	86	87			
vC1, stage 1 conf vol						
vC2, stage 2 conf vol						
vCu, unblocked vol	395	86	87			
tC, single (s)	6.4	6.2	4.1			
tC, 2 stage (s)						
tF (s)	3.5	3.3	2.2			
p0 queue free %	100	100	100			
cM capacity (veh/h)	609	973	1509			

Direction, Lane #	EB 1	NB 1	SB 1
Volume Total	2	307	87
Volume Left	2	2	0
Volume Right	0	0	2
cSH	609	1509	1700
Volume to Capacity	0.00	0.00	0.05
Queue Length 95th (ft)	0	0	0
Control Delay (s)	10.9	0.1	0.0
Lane LOS	B	A	
Approach Delay (s)	10.9	0.1	0.0
Approach LOS	B		

Intersection Summary			
Average Delay	0.1		
Intersection Capacity Utilization	26.3%	ICU Level of Service	A
Analysis Period (min)	15		

Movement	EBL	EBR	NBL	NBT	SBT	SBR
Lane Configurations						
Volume (veh/h)	2	1	1	288	79	1
Sign Control	Stop			Free	Free	
Grade	0%			0%	0%	
Peak Hour Factor	0.92	0.92	0.92	0.92	0.92	0.92
Hourly flow rate (vph)	2	1	1	313	86	1
Pedestrians						
Lane Width (ft)						
Walking Speed (ft/s)						
Percent Blockage						
Right turn flare (veh)						
Median type				None	None	
Median storage veh)						
Upstream signal (ft)						
pX, platoon unblocked						
vC, conflicting volume	402	86	87			
vC1, stage 1 conf vol						
vC2, stage 2 conf vol						
vCu, unblocked vol	402	86	87			
tC, single (s)	6.4	6.2	4.1			
tC, 2 stage (s)						
tF (s)	3.5	3.3	2.2			
p0 queue free %	100	100	100			
cM capacity (veh/h)	604	972	1509			

Direction, Lane #	EB 1	NB 1	SB 1
Volume Total	3	314	87
Volume Left	2	1	0
Volume Right	1	0	1
cSH	691	1509	1700
Volume to Capacity	0.00	0.00	0.05
Queue Length 95th (ft)	0	0	0
Control Delay (s)	10.2	0.0	0.0
Lane LOS	B	A	
Approach Delay (s)	10.2	0.0	0.0
Approach LOS	B		

Intersection Summary			
Average Delay	0.1		
Intersection Capacity Utilization	26.0%	ICU Level of Service	A
Analysis Period (min)	15		

Movement	EBL	EBR	NBL	NBT	SBT	SBR
Lane Configurations						
Volume (veh/h)	17	3	0	284	78	5
Sign Control	Stop			Free	Free	
Grade	0%			0%	0%	
Peak Hour Factor	0.92	0.92	0.92	0.92	0.92	0.92
Hourly flow rate (vph)	18	3	0	309	85	5
Pedestrians						
Lane Width (ft)						
Walking Speed (ft/s)						
Percent Blockage						
Right turn flare (veh)						
Median type				None	None	
Median storage veh)						
Upstream signal (ft)						
pX, platoon unblocked						
vC, conflicting volume	396	88	90			
vC1, stage 1 conf vol						
vC2, stage 2 conf vol						
vCu, unblocked vol	396	88	90			
tC, single (s)	6.4	6.2	4.1			
tC, 2 stage (s)						
tF (s)	3.5	3.3	2.2			
p0 queue free %	97	100	100			
cM capacity (veh/h)	609	971	1505			

Direction, Lane #	EB 1	NB 1	SB 1
Volume Total	22	309	90
Volume Left	18	0	0
Volume Right	3	0	5
cSH	645	1505	1700
Volume to Capacity	0.03	0.00	0.05
Queue Length 95th (ft)	3	0	0
Control Delay (s)	10.8	0.0	0.0
Lane LOS	B		
Approach Delay (s)	10.8	0.0	0.0
Approach LOS	B		

Intersection Summary			
Average Delay	0.6		
Intersection Capacity Utilization	24.9%	ICU Level of Service	A
Analysis Period (min)	15		

Movement	EBL	EBR	NBL	NBT	SBT	SBR
Lane Configurations						
Volume (veh/h)	25	21	15	261	50	6
Sign Control	Stop			Free	Free	
Grade	0%			0%	0%	
Peak Hour Factor	0.92	0.92	0.92	0.92	0.92	0.92
Hourly flow rate (vph)	27	23	16	284	54	7
Pedestrians						
Lane Width (ft)						
Walking Speed (ft/s)						
Percent Blockage						
Right turn flare (veh)						
Median type				None	None	
Median storage veh)						
Upstream signal (ft)						
pX, platoon unblocked						
vC, conflicting volume	374	58	61			
vC1, stage 1 conf vol						
vC2, stage 2 conf vol						
vCu, unblocked vol	374	58	61			
tC, single (s)	6.4	6.2	4.1			
tC, 2 stage (s)						
tF (s)	3.5	3.3	2.2			
p0 queue free %	96	98	99			
cM capacity (veh/h)	620	1009	1542			

Direction, Lane #	EB 1	NB 1	SB 1
Volume Total	50	300	61
Volume Left	27	16	0
Volume Right	23	0	7
cSH	753	1542	1700
Volume to Capacity	0.07	0.01	0.04
Queue Length 95th (ft)	5	1	0
Control Delay (s)	10.1	0.5	0.0
Lane LOS	B	A	
Approach Delay (s)	10.1	0.5	0.0
Approach LOS	B		

Intersection Summary			
Average Delay	1.6		
Intersection Capacity Utilization	31.2%	ICU Level of Service	A
Analysis Period (min)	15		

Movement	EBL	EBT	EBR	WBL	WBT	WBR	NBL	NBT	NBR	SBL	SBT	SBR
Lane Configurations												
Sign Control		Stop			Stop			Stop			Stop	
Volume (vph)	4	116	27	28	99	1	21	222	12	1	1	1
Peak Hour Factor	0.92	0.92	0.92	0.92	0.92	0.92	0.92	0.92	0.92	0.92	0.92	0.92
Hourly flow rate (vph)	4	126	29	30	108	1	23	241	13	1	1	1

Direction, Lane #	EB 1	WB 1	NB 1	SB 1
Volume Total (vph)	160	139	277	3
Volume Left (vph)	4	30	23	1
Volume Right (vph)	29	1	13	1
Hadj (s)	-0.07	0.07	0.02	-0.10
Departure Headway (s)	4.7	4.9	4.7	4.9
Degree Utilization, x	0.21	0.19	0.36	0.00
Capacity (veh/h)	711	689	736	660
Control Delay (s)	9.0	9.0	10.3	7.9
Approach Delay (s)	9.0	9.0	10.3	7.9
Approach LOS	A	A	B	A

Intersection Summary			
Delay	9.6		
HCM Level of Service	A		
Intersection Capacity Utilization	38.9%	ICU Level of Service	A
Analysis Period (min)	15		

HCM Unsignalized Intersection Capacity Analysis
1: SW 97th Ave. & SW 174th St.

2/11/2015

Movement	EBL	EBT	EBR	WBL	WBT	WBR	NBL	NBT	NBR	SBL	SBT	SBR
Lane Configurations												
Sign Control		Stop			Stop			Stop			Stop	
Volume (vph)	3	127	33	30	109	4	24	8	13	2	4	4
Peak Hour Factor	0.84	0.84	0.84	0.84	0.84	0.84	0.84	0.84	0.84	0.84	0.84	0.84
Hourly flow rate (vph)	4	151	39	36	130	5	29	10	15	2	5	5

Direction, Lane #	EB 1	WB 1	NB 1	SB 1
Volume Total (vph)	194	170	54	12
Volume Left (vph)	4	36	29	2
Volume Right (vph)	39	5	15	5
Hadj (s)	-0.08	0.06	-0.03	-0.17
Departure Headway (s)	4.2	4.3	4.7	4.6
Degree Utilization, x	0.22	0.20	0.07	0.02
Capacity (veh/h)	846	805	710	710
Control Delay (s)	8.3	8.4	8.0	7.7
Approach Delay (s)	8.3	8.4	8.0	7.7
Approach LOS	A	A	A	A

Intersection Summary			
Delay	8.3		
HCM Level of Service	A		
Intersection Capacity Utilization	32.2%	ICU Level of Service	A
Analysis Period (min)	15		

Lane Group	EBL	NBT	SBT	NET
Lane Group Flow (vph)	138	149	22	2338
v/c Ratio	0.69	0.44	0.10	0.73
Control Delay	74.2	16.1	53.8	19.3
Queue Delay	0.0	0.0	0.0	0.0
Total Delay	74.2	16.1	53.8	19.3
Queue Length 50th (ft)	116	12	17	480
Queue Length 95th (ft)	188	81	46	610
Internal Link Dist (ft)	257	1041	665	1300
Turn Bay Length (ft)				
Base Capacity (vph)	278	335	228	3195
Starvation Cap Reductn	0	0	0	0
Spillback Cap Reductn	0	0	0	0
Storage Cap Reductn	0	0	0	0
Reduced v/c Ratio	0.50	0.44	0.10	0.73

Intersection Summary

Movement	EBL	EBR	NBL	NBT	NBR	SBT	SBR	NEL2	NEL	NET	NER
Lane Configurations											
Volume (vph)	2	129	4	11	126	7	14	4	6	2184	28
Ideal Flow (vphpl)	1900	1900	1900	1900	1900	1900	1900	1900	1900	1900	1900
Total Lost time (s)	5.0			5.0		5.0				5.0	
Lane Util. Factor	1.00			1.00		1.00				0.91	
Frt	0.87			0.88		0.91				1.00	
Flt Protected	1.00			1.00		1.00				1.00	
Satd. Flow (prot)	1614			1636		1691				5075	
Flt Permitted	1.00			0.99		1.00				1.00	
Satd. Flow (perm)	1614			1629		1691				5075	
Peak-hour factor, PHF	0.95	0.95	0.95	0.95	0.95	0.95	0.95	0.95	0.95	0.95	0.95
Adj. Flow (vph)	2	136	4	12	133	7	15	4	6	2299	29
RTOR Reduction (vph)	0	0	0	115	0	0	0	0	0	1	0
Lane Group Flow (vph)	138	0	0	34	0	22	0	0	0	2337	0
Turn Type	NA		Perm	NA		NA		Perm	Perm	NA	
Protected Phases	3			4		8				6	
Permitted Phases			4					6	6		
Actuated Green, G (s)	16.5			18.0		18.0				84.1	
Effective Green, g (s)	16.5			18.0		18.0				84.1	
Actuated g/C Ratio	0.12			0.13		0.13				0.63	
Clearance Time (s)	5.0			5.0		5.0				5.0	
Vehicle Extension (s)	3.0			3.0		3.0				3.0	
Lane Grp Cap (vph)	199			219		228				3195	
v/s Ratio Prot	c0.09					0.01					
v/s Ratio Perm				c0.02						0.46	
v/c Ratio	0.69			0.15		0.10				0.73	
Uniform Delay, d1	56.1			51.1		50.7				17.0	
Progression Factor	1.00			1.00		1.00				1.00	
Incremental Delay, d2	10.0			1.5		0.8				1.5	
Delay (s)	66.1			52.6		51.5				18.5	
Level of Service	E			D		D				B	
Approach Delay (s)	66.1			52.6		51.5				18.5	
Approach LOS	E			D		D				B	

Intersection Summary			
HCM Average Control Delay	23.2	HCM Level of Service	C
HCM Volume to Capacity ratio	0.64		
Actuated Cycle Length (s)	133.6	Sum of lost time (s)	15.0
Intersection Capacity Utilization	75.7%	ICU Level of Service	D
Analysis Period (min)	15		
c Critical Lane Group			

Movement	EBL	EBR	NBL	NBT	SBT	SBR
Lane Configurations						
Volume (veh/h)	7	36	31	147	78	6
Sign Control	Stop			Free	Free	
Grade	0%			0%	0%	
Peak Hour Factor	0.93	0.93	0.93	0.93	0.93	0.93
Hourly flow rate (vph)	8	39	33	158	84	6
Pedestrians						
Lane Width (ft)						
Walking Speed (ft/s)						
Percent Blockage						
Right turn flare (veh)						
Median type				None	None	
Median storage veh)						
Upstream signal (ft)					1121	
pX, platoon unblocked						
vC, conflicting volume	312	87	90			
vC1, stage 1 conf vol						
vC2, stage 2 conf vol						
vCu, unblocked vol	312	87	90			
tC, single (s)	6.4	6.2	4.1			
tC, 2 stage (s)						
tF (s)	3.5	3.3	2.2			
p0 queue free %	99	96	98			
cM capacity (veh/h)	666	971	1505			

Direction, Lane #	EB 1	NB 1	SB 1
Volume Total	46	191	90
Volume Left	8	33	0
Volume Right	39	0	6
cSH	904	1505	1700
Volume to Capacity	0.05	0.02	0.05
Queue Length 95th (ft)	4	2	0
Control Delay (s)	9.2	1.4	0.0
Lane LOS	A	A	
Approach Delay (s)	9.2	1.4	0.0
Approach LOS	A		

Intersection Summary			
Average Delay	2.1		
Intersection Capacity Utilization	26.1%	ICU Level of Service	A
Analysis Period (min)	15		

Movement	WBL	WBR	NBT	NBR	SBL	SBT
Lane Configurations						
Volume (veh/h)	21	18	148	6	13	75
Sign Control	Stop		Free			Free
Grade	0%		0%			0%
Peak Hour Factor	0.97	0.97	0.97	0.97	0.97	0.97
Hourly flow rate (vph)	22	19	153	6	13	77
Pedestrians						
Lane Width (ft)						
Walking Speed (ft/s)						
Percent Blockage						
Right turn flare (veh)						
Median type			None			None
Median storage veh)						
Upstream signal (ft)						
pX, platoon unblocked						
vC, conflicting volume	260	156			159	
vC1, stage 1 conf vol						
vC2, stage 2 conf vol						
vCu, unblocked vol	260	156			159	
tC, single (s)	6.4	6.2			4.1	
tC, 2 stage (s)						
tF (s)	3.5	3.3			2.2	
p0 queue free %	97	98			99	
cM capacity (veh/h)	722	890			1421	

Direction, Lane #	WB 1	NB 1	SB 1
Volume Total	40	159	91
Volume Left	22	0	13
Volume Right	19	6	0
cSH	791	1700	1421
Volume to Capacity	0.05	0.09	0.01
Queue Length 95th (ft)	4	0	1
Control Delay (s)	9.8	0.0	1.2
Lane LOS	A		A
Approach Delay (s)	9.8	0.0	1.2
Approach LOS	A		

Intersection Summary			
Average Delay	1.7		
Intersection Capacity Utilization	25.0%	ICU Level of Service	A
Analysis Period (min)	15		

Movement	EBL	EBR	NBL	NBT	SBT	SBR
Lane Configurations						
Volume (veh/h)	10	26	7	162	92	2
Sign Control	Stop			Free	Free	
Grade	0%			0%	0%	
Peak Hour Factor	0.94	0.94	0.94	0.94	0.94	0.94
Hourly flow rate (vph)	11	28	7	172	98	2
Pedestrians						
Lane Width (ft)						
Walking Speed (ft/s)						
Percent Blockage						
Right turn flare (veh)						
Median type				None	None	
Median storage veh)						
Upstream signal (ft)				1230		
pX, platoon unblocked						
vC, conflicting volume	286	99	100			
vC1, stage 1 conf vol						
vC2, stage 2 conf vol						
vCu, unblocked vol	286	99	100			
tC, single (s)	6.4	6.2	4.1			
tC, 2 stage (s)						
tF (s)	3.5	3.3	2.2			
p0 queue free %	98	97	100			
cM capacity (veh/h)	701	957	1493			

Direction, Lane #	EB 1	NB 1	SB 1
Volume Total	38	180	100
Volume Left	11	7	0
Volume Right	28	0	2
cSH	869	1493	1700
Volume to Capacity	0.04	0.00	0.06
Queue Length 95th (ft)	3	0	0
Control Delay (s)	9.3	0.3	0.0
Lane LOS	A	A	
Approach Delay (s)	9.3	0.3	0.0
Approach LOS	A		

Intersection Summary			
Average Delay	1.3		
Intersection Capacity Utilization	24.2%	ICU Level of Service	A
Analysis Period (min)	15		

Movement	EBL	EBT	EBR	WBL	WBT	WBR	NBL	NBT	NBR	SBL	SBT	SBR
Lane Configurations												
Volume (veh/h)	1	0	7	3	2	1	3	168	6	1	107	7
Sign Control		Stop			Stop			Free			Free	
Grade		0%			0%			0%			0%	
Peak Hour Factor	0.92	0.92	0.92	0.92	0.92	0.92	0.92	0.92	0.92	0.92	0.92	0.92
Hourly flow rate (vph)	1	0	8	3	2	1	3	183	7	1	116	8
Pedestrians												
Lane Width (ft)												
Walking Speed (ft/s)												
Percent Blockage												
Right turn flare (veh)												
Median type								None			None	
Median storage veh)												
Upstream signal (ft)								904				
pX, platoon unblocked												
vC, conflicting volume	317	318	120	322	318	186	124			189		
vC1, stage 1 conf vol												
vC2, stage 2 conf vol												
vCu, unblocked vol	317	318	120	322	318	186	124			189		
tC, single (s)	7.1	6.5	6.2	7.1	6.5	6.2	4.1			4.1		
tC, 2 stage (s)												
tF (s)	3.5	4.0	3.3	3.5	4.0	3.3	2.2			2.2		
p0 queue free %	100	100	99	99	100	100	100			100		
cM capacity (veh/h)	632	597	931	624	596	856	1463			1385		

Direction, Lane #	EB 1	WB 1	NB 1	SB 1
Volume Total	9	7	192	125
Volume Left	1	3	3	1
Volume Right	8	1	7	8
cSH	879	643	1463	1385
Volume to Capacity	0.01	0.01	0.00	0.00
Queue Length 95th (ft)	1	1	0	0
Control Delay (s)	9.1	10.7	0.1	0.1
Lane LOS	A	B	A	A
Approach Delay (s)	9.1	10.7	0.1	0.1
Approach LOS	A	B		

Intersection Summary			
Average Delay	0.6		
Intersection Capacity Utilization	21.1%	ICU Level of Service	A
Analysis Period (min)	15		

Movement	EBL	EBT	EBR	WBL	WBT	WBR	NBL	NBT	NBR	SBL	SBT	SBR
Lane Configurations												
Volume (veh/h)	0	0	2	0	1	1	2	173	1	0	117	2
Sign Control		Stop			Stop			Free			Free	
Grade		0%			0%			0%			0%	
Peak Hour Factor	0.95	0.95	0.95	0.95	0.95	0.95	0.95	0.95	0.95	0.95	0.95	0.95
Hourly flow rate (vph)	0	0	2	0	1	1	2	182	1	0	123	2
Pedestrians												
Lane Width (ft)												
Walking Speed (ft/s)												
Percent Blockage												
Right turn flare (veh)												
Median type								None			None	
Median storage veh)												
Upstream signal (ft)								601				
pX, platoon unblocked												
vC, conflicting volume	313	312	124	313	312	183	125			183		
vC1, stage 1 conf vol												
vC2, stage 2 conf vol												
vCu, unblocked vol	313	312	124	313	312	183	125			183		
tC, single (s)	7.1	6.5	6.2	7.1	6.5	6.2	4.1			4.1		
tC, 2 stage (s)												
tF (s)	3.5	4.0	3.3	3.5	4.0	3.3	2.2			2.2		
p0 queue free %	100	100	100	100	100	100	100			100		
cM capacity (veh/h)	638	602	926	637	602	860	1461			1392		

Direction, Lane #	EB 1	WB 1	NB 1	SB 1
Volume Total	2	2	185	125
Volume Left	0	0	2	0
Volume Right	2	1	1	2
cSH	926	708	1461	1392
Volume to Capacity	0.00	0.00	0.00	0.00
Queue Length 95th (ft)	0	0	0	0
Control Delay (s)	8.9	10.1	0.1	0.0
Lane LOS	A	B	A	
Approach Delay (s)	8.9	10.1	0.1	0.0
Approach LOS	A	B		

Intersection Summary			
Average Delay	0.2		
Intersection Capacity Utilization	20.8%	ICU Level of Service	A
Analysis Period (min)	15		

Movement	EBL	EBT	EBR	WBL	WBT	WBR	NBL	NBT	NBR	SBL	SBT	SBR
Lane Configurations												
Volume (veh/h)	4	0	23	1	1	1	6	171	2	0	117	1
Sign Control		Stop			Stop			Free			Free	
Grade		0%			0%			0%			0%	
Peak Hour Factor	0.97	0.97	0.97	0.97	0.97	0.97	0.97	0.97	0.97	0.97	0.97	0.97
Hourly flow rate (vph)	4	0	24	1	1	1	6	176	2	0	121	1
Pedestrians												
Lane Width (ft)												
Walking Speed (ft/s)												
Percent Blockage												
Right turn flare (veh)												
Median type								None			None	
Median storage veh)												
Upstream signal (ft)								300				
pX, platoon unblocked	0.96	0.96		0.96	0.96	0.96				0.96		
vC, conflicting volume	312	312	121	335	311	177	122			178		
vC1, stage 1 conf vol												
vC2, stage 2 conf vol												
vCu, unblocked vol	266	266	121	289	265	126	122			127		
tC, single (s)	7.1	6.5	6.2	7.1	6.5	6.2	4.1			4.1		
tC, 2 stage (s)												
tF (s)	3.5	4.0	3.3	3.5	4.0	3.3	2.2			2.2		
p0 queue free %	99	100	97	100	100	100	100			100		
cM capacity (veh/h)	657	613	930	620	614	890	1466			1405		

Direction, Lane #	EB 1	WB 1	NB 1	SB 1
Volume Total	28	3	185	122
Volume Left	4	1	6	0
Volume Right	24	1	2	1
cSH	876	687	1466	1405
Volume to Capacity	0.03	0.00	0.00	0.00
Queue Length 95th (ft)	2	0	0	0
Control Delay (s)	9.2	10.3	0.3	0.0
Lane LOS	A	B	A	
Approach Delay (s)	9.2	10.3	0.3	0.0
Approach LOS	A	B		

Intersection Summary			
Average Delay	1.0		
Intersection Capacity Utilization	24.0%	ICU Level of Service	A
Analysis Period (min)	15		

Lane Group	EBL	EBT	EBR	WBL	WBT	NBL	NBT	SBL	SBT
Lane Group Flow (vph)	75	407	65	193	477	134	310	12	143
v/c Ratio	0.12	0.69	0.15	0.33	0.37	0.29	0.39	0.04	0.29
Control Delay	9.1	30.5	8.1	10.9	22.1	25.4	18.0	24.1	28.2
Queue Delay	0.0	0.0	0.0	0.0	0.0	0.0	0.0	0.0	0.0
Total Delay	9.1	30.5	8.1	10.9	22.1	25.4	18.0	24.1	28.2
Queue Length 50th (ft)	15	149	0	42	99	53	37	4	26
Queue Length 95th (ft)	40	278	32	92	167	115	85	19	62
Internal Link Dist (ft)		1915			531		229		156
Turn Bay Length (ft)	130			95		155		130	
Base Capacity (vph)	665	853	650	600	1768	441	1121	321	832
Starvation Cap Reductn	0	0	0	0	0	0	0	0	0
Spillback Cap Reductn	0	0	0	0	0	0	0	0	0
Storage Cap Reductn	0	0	0	0	0	0	0	0	0
Reduced v/c Ratio	0.11	0.48	0.10	0.32	0.27	0.30	0.28	0.04	0.17

Intersection Summary

Movement	EBL	EBT	EBR	WBL	WBT	WBR	NBL	NBT	NBR	SBL	SBT	SBR
Lane Configurations												
Volume (vph)	68	370	59	176	415	19	122	145	137	11	93	37
Ideal Flow (vphpl)	1900	1900	1900	1900	1900	1900	1900	1900	1900	1900	1900	1900
Total Lost time (s)	3.0	3.0	5.0	3.0	3.0		3.0	3.0		3.0	3.0	
Lane Util. Factor	1.00	1.00	1.00	1.00	0.95		1.00	0.95		1.00	0.95	
Frt	1.00	1.00	0.85	1.00	0.99		1.00	0.93		1.00	0.96	
Flt Protected	0.95	1.00	1.00	0.95	1.00		0.95	1.00		0.95	1.00	
Satd. Flow (prot)	1770	1863	1583	1770	3516		1770	3281		1770	3387	
Flt Permitted	0.48	1.00	1.00	0.51	1.00		0.66	1.00		0.56	1.00	
Satd. Flow (perm)	893	1863	1583	954	3516		1232	3281		1049	3387	
Peak-hour factor, PHF	0.91	0.91	0.91	0.91	0.91	0.91	0.91	0.91	0.91	0.91	0.91	0.91
Adj. Flow (vph)	75	407	65	193	456	21	134	159	151	12	102	41
RTOR Reduction (vph)	0	0	49	0	3	0	0	128	0	0	35	0
Lane Group Flow (vph)	75	407	16	193	474	0	134	182	0	12	108	0
Turn Type	custom	NA	custom	custom	NA		custom	NA		custom	NA	
Protected Phases	1 2	2 4		1 3	3 4		5 6	6 8		5 7	7 8	
Permitted Phases	4		4	4			8			8		
Actuated Green, G (s)	39.0	26.0	21.7	36.8	29.8		23.6	13.5		16.3	12.2	
Effective Green, g (s)	39.0	26.0	21.7	36.8	29.8		23.6	13.5		16.3	12.2	
Actuated g/C Ratio	0.43	0.29	0.24	0.41	0.33		0.26	0.15		0.18	0.13	
Clearance Time (s)			5.0									
Vehicle Extension (s)			3.0									
Lane Grp Cap (vph)	552	535	380	524	1158		412	489		252	457	
v/s Ratio Prot	0.03	c0.22		c0.06	c0.13		c0.05	c0.06		0.00	c0.03	
v/s Ratio Perm	0.03		0.01	0.09			0.03			0.00		
v/c Ratio	0.14	0.76	0.04	0.37	0.41		0.33	0.37		0.05	0.24	
Uniform Delay, d1	15.3	29.4	26.4	17.9	23.5		26.8	34.7		30.6	35.0	
Progression Factor	1.00	1.00	1.00	1.00	1.00		1.00	1.00		1.00	1.00	
Incremental Delay, d2	0.1	6.3	0.0	0.4	0.2		0.5	0.5		0.1	0.3	
Delay (s)	15.4	35.7	26.5	18.3	23.8		27.2	35.2		30.7	35.2	
Level of Service	B	D	C	B	C		C	D		C	D	
Approach Delay (s)		31.8			22.2			32.8			34.9	
Approach LOS		C			C			C			C	

Intersection Summary			
HCM Average Control Delay	28.8	HCM Level of Service	C
HCM Volume to Capacity ratio	0.49		
Actuated Cycle Length (s)	90.5	Sum of lost time (s)	21.0
Intersection Capacity Utilization	55.1%	ICU Level of Service	B
Analysis Period (min)	15		
c Critical Lane Group			

Movement	EBL	EBT	WBT	WBR	SBL	SBR
Lane Configurations						
Volume (veh/h)	140	447	529	9	19	94
Sign Control		Free	Free		Stop	
Grade		0%	0%		0%	
Peak Hour Factor	0.94	0.94	0.94	0.94	0.94	0.94
Hourly flow rate (vph)	149	476	563	10	20	100
Pedestrians						
Lane Width (ft)						
Walking Speed (ft/s)						
Percent Blockage						
Right turn flare (veh)						
Median type		None	None			
Median storage veh)						
Upstream signal (ft)		611				
pX, platoon unblocked					0.85	
vC, conflicting volume	572				1341	568
vC1, stage 1 conf vol						
vC2, stage 2 conf vol						
vCu, unblocked vol	572				1312	568
tC, single (s)	4.1				6.4	6.2
tC, 2 stage (s)						
tF (s)	2.2				3.5	3.3
p0 queue free %	85				84	81
cM capacity (veh/h)	1000				126	523

Direction, Lane #	EB 1	EB 2	WB 1	SB 1
Volume Total	149	476	572	120
Volume Left	149	0	0	20
Volume Right	0	0	10	100
cSH	1000	1700	1700	342
Volume to Capacity	0.15	0.28	0.34	0.35
Queue Length 95th (ft)	13	0	0	39
Control Delay (s)	9.2	0.0	0.0	21.1
Lane LOS	A			C
Approach Delay (s)	2.2		0.0	21.1
Approach LOS				C

Intersection Summary			
Average Delay	3.0		
Intersection Capacity Utilization	53.0%	ICU Level of Service	A
Analysis Period (min)	15		

Lane Group	EBL	EBT	WBL	WBT	NBL	NBT	SBL	SBT
Lane Group Flow (vph)	302	467	262	537	136	1793	207	2083
v/c Ratio	0.91	0.71	0.92	0.91	0.86	0.87	0.90	0.93
Control Delay	86.4	55.6	92.8	76.4	70.8	43.4	73.1	44.2
Queue Delay	0.0	0.0	0.0	0.0	0.0	0.0	0.0	0.0
Total Delay	86.4	55.6	92.8	76.4	70.8	43.4	73.1	44.2
Queue Length 50th (ft)	271	197	260	265	71	549	134	647
Queue Length 95th (ft)	#437	260	#442	#371	#198	618	#284	723
Internal Link Dist (ft)		364		1915		469		768
Turn Bay Length (ft)			286		160		130	
Base Capacity (vph)	347	692	293	608	159	2055	236	2265
Starvation Cap Reductn	0	0	0	0	0	0	0	0
Spillback Cap Reductn	0	0	0	0	0	0	0	0
Storage Cap Reductn	0	0	0	0	0	0	0	0
Reduced v/c Ratio	0.87	0.67	0.89	0.88	0.86	0.87	0.88	0.92

Intersection Summary

95th percentile volume exceeds capacity, queue may be longer.
Queue shown is maximum after two cycles.

Movement	EBL	EBT	EBR	WBL	WBT	WBR	NBL	NBT	NBR	SBL	SBT	SBR
Lane Configurations												
Volume (vph)	284	329	110	356	377	18	128	1560	125	195	1729	229
Ideal Flow (vphpl)	1900	1900	1900	1900	1900	1900	1900	1900	1900	1900	1900	1900
Total Lost time (s)	5.0	5.0		5.0	5.0		3.0	5.0		3.0	5.0	
Lane Util. Factor	1.00	0.95		0.91	0.91		1.00	0.91		1.00	0.91	
Frt	1.00	0.96		1.00	0.99		1.00	0.99		1.00	0.98	
Flt Protected	0.95	1.00		0.95	0.99		0.95	1.00		0.95	1.00	
Satd. Flow (prot)	1770	3406		1610	3336		1770	5029		1770	4996	
Flt Permitted	0.95	1.00		0.95	0.99		0.07	1.00		0.07	1.00	
Satd. Flow (perm)	1770	3406		1610	3336		133	5029		126	4996	
Peak-hour factor, PHF	0.94	0.94	0.94	0.94	0.94	0.94	0.94	0.94	0.94	0.94	0.94	0.94
Adj. Flow (vph)	302	350	117	379	401	19	136	1660	133	207	1839	244
RTOR Reduction (vph)	0	24	0	0	2	0	0	7	0	0	12	0
Lane Group Flow (vph)	302	443	0	262	535	0	136	1786	0	207	2071	0
Turn Type	Split	NA		Split	NA		pm+pt	NA		pm+pt	NA	
Protected Phases	4	4		8	8		5	2		1	6	
Permitted Phases							2			6		
Actuated Green, G (s)	25.8	25.8		24.2	24.2		64.1	56.1		72.6	61.6	
Effective Green, g (s)	25.8	25.8		24.2	24.2		64.1	56.1		72.6	61.6	
Actuated g/C Ratio	0.19	0.19		0.18	0.18		0.47	0.41		0.53	0.45	
Clearance Time (s)	5.0	5.0		5.0	5.0		3.0	5.0		3.0	5.0	
Vehicle Extension (s)	3.0	3.0		3.0	3.0		3.0	3.0		3.0	3.0	
Lane Grp Cap (vph)	332	639		283	587		157	2050		228	2237	
v/s Ratio Prot	c0.17	0.13		c0.16	0.16		0.05	0.36		c0.09	c0.41	
v/s Ratio Perm							0.35			0.39		
v/c Ratio	0.91	0.69		0.93	0.91		0.87	0.87		0.91	0.93	
Uniform Delay, d1	54.8	52.2		55.8	55.7		31.3	37.4		40.8	35.8	
Progression Factor	1.00	1.00		1.00	1.00		1.00	1.00		1.00	1.00	
Incremental Delay, d2	27.4	3.3		34.2	18.5		36.0	5.4		35.3	7.2	
Delay (s)	82.2	55.5		90.0	74.2		67.4	42.9		76.1	43.0	
Level of Service	F	E		F	E		E	D		E	D	
Approach Delay (s)		66.0			79.4			44.6			46.0	
Approach LOS		E			E			D			D	

Intersection Summary			
HCM Average Control Delay	52.8	HCM Level of Service	D
HCM Volume to Capacity ratio	0.90		
Actuated Cycle Length (s)	137.6	Sum of lost time (s)	13.0
Intersection Capacity Utilization	91.4%	ICU Level of Service	F
Analysis Period (min)	15		
c Critical Lane Group			

Movement	EBL	EBT	EBR	WBL	WBT	WBR	NBL	NBT	NBR	SBL	SBT	SBR
Lane Configurations												
Volume (vph)	284	329	110	356	377	18	128	1560	125	195	1729	229
Movement Number	7	4	14	3	8	18	5	2	12	1	6	16
Initial Queue, veh	0	0	0	0	0	0	0	0	0	0	0	0
Ped-Bike Adj. Factor (A_pbT)	1.00		1.00	1.00		1.00	1.00		1.00	1.00		1.00
Parking, Bus Adj. Factors	1.00	1.00	1.00	1.00	1.00	1.00	1.00	1.00	1.00	1.00	1.00	1.00
Adj. Sat. Flow Rate, veh/h/ln	1863	1863	1863	1863	1863	1863	1863	1863	1863	1863	1863	1863
Lanes	1	2	0	1	2	0	1	3	0	1	3	0
Lane Assignment												
Capacity, veh/h	331	501	165	323	642	31	167	1990	159	232	2012	264
Proportion Arriving On Green	0.19	0.19	0.19	0.18	0.18	0.18	0.06	0.41	0.41	0.09	0.44	0.44
Movement Delay, s/veh	81.5	57.4	58.8	161.5	55.3	55.5	57.8	41.9	46.7	62.9	44.3	51.9
Movement LOS	F	E	E	F	E	E	E	D	D	E	D	D
Approach Volume, veh/h		769			799			1929			2290	
Approach Delay, s/veh		67.3			105.7			44.5			48.4	
Approach LOS		E			F			D			D	

Timer:	1	2	3	4	5	6	7	8
Assigned Phase	1	2	8	4	5	6		
Case No	1.1	4.0	10.0	10.0	1.1	4.0		
Phase Duration (G+Y+Rc), s	14.76	61.91	30.00	30.61	10.97	65.70		
Change Period (Y+Rc), s	3.00	5.00	5.00	5.00	3.00	5.00		
Max. Allowable Headway (MAH), s	4.00	3.94	3.96	3.99	4.00	3.94		
Maximum Green Setting (Gmax), s	14.00	56.00	25.00	27.00	8.00	62.00		
Max. Queue Clearance Time (g_c+I1), s	11.62	44.54	27.00	24.92	8.02	54.66		
Green Extension Time (g_e), s	0.15	10.30	0.00	0.68	0.00	6.04		
Probability of Phase Call (p_c)	1.000	1.000	1.000	1.000	0.994	1.000		
Probability of Max Out (p_x)	1.000	0.922	1.000	1.000	1.000	0.964		

Left-Turn Movement Data					
Assigned Movement	1		3	7	5
Mvmt. Sat Flow, veh/h	1774.04		1774.04	1774.04	1774.04

Through Movement Data					
Assigned Movement		2	8	4	6
Mvmt. Sat Flow, veh/h		4800.97	3527.86	2685.67	4549.50

Right-Turn Movement Data					
Assigned Movement		12	18	14	16
Mvmt. Sat Flow, veh/h		384.18	167.98	883.84	597.92

Left Lane Group Data								
Assigned Movement	1	0	3	7	5	0	0	0
Lane Assignment	L (Pr/Pm)		L	LL (Pr/Pm)				
Lanes in Group	1	0	1	1	1	0	0	0
Group Volume (v), veh/h	207.4	0.0	378.7	302.1	136.2	0.0	0.0	0.0
Group Sat. Flow (s), veh/h/ln	1774.0	0.0	1774.0	1774.0	1774.0	0.0	0.0	0.0
Queue Serve Time (g_s), s	9.6	0.0	25.0	22.9	6.0	0.0	0.0	0.0
Cycle Queue Clear Time (g_c), s	9.6	0.0	25.0	22.9	6.0	0.0	0.0	0.0

Perm LT Sat Flow Rate (s_l), veh/h/ln	262.6	0.0	1774.0	1774.0	197.6	0.0	0.0	0.0
Shared LT Sat Flow (s_sh), veh/h/ln	0.0	0.0	0.0	0.0	0.0	0.0	0.0	0.0
Perm LT Eff. Green (g_p), s	62.7	0.0	0.0	0.0	56.9	0.0	0.0	0.0
Perm LT Serve Time (g_u), s	14.4	0.0	0.0	0.0	8.0	0.0	0.0	0.0
Perm LT Que Serve Time (g_ps), s	14.4	0.0	0.0	0.0	8.0	0.0	0.0	0.0
Time to First Blk (g_f), s	0.0	0.0	0.0	0.0	0.0	0.0	0.0	0.0
Serve Time pre Blk (g_fs), s	0.0	0.0	0.0	0.0	0.0	0.0	0.0	0.0
Proportion LT Inside Lane (P_L)	1.000	0.000	1.000	1.000	1.000	0.000	0.000	0.000
Lane Group Capacity (c), veh/h	231.9	0.0	323.1	330.9	167.1	0.0	0.0	0.0
Volume-to-Capacity Ratio (X)	0.895	0.000	1.172	0.913	0.815	0.000	0.000	0.000
Available Capacity (c_a), veh/h	260.9	0.0	323.1	348.9	167.4	0.0	0.0	0.0
Upstream Filter Factor (I)	1.000	0.000	1.000	1.000	1.000	0.000	0.000	0.000
Uniform Delay (d1), s/veh	34.8	0.0	56.1	54.7	32.1	0.0	0.0	0.0
Incremental Delay (d2), s/veh	28.1	0.0	105.4	26.8	25.7	0.0	0.0	0.0
Initial Queue Delay (d3), s/veh	0.0	0.0	0.0	0.0	0.0	0.0	0.0	0.0
Control Delay (d), s/veh	62.9	0.0	161.5	81.5	57.8	0.0	0.0	0.0
First-Term Queue (Q1), veh/ln	4.1	0.0	11.2	10.2	2.5	0.0	0.0	0.0
Second-Term Queue (Q2), veh/ln	1.8	0.0	9.5	2.5	1.2	0.0	0.0	0.0
Third-Term Queue (Q3), veh/ln	0.0	0.0	0.0	0.0	0.0	0.0	0.0	0.0
Percentile bk-of-que factor (f_B%)	1.000	0.000	1.000	1.000	1.000	0.000	0.000	0.000
Percentile Back of Queue (Q%), veh/ln	5.9	0.0	20.6	12.7	3.7	0.0	0.0	0.0
Percentile Storage Ratio (RQ%)	1.15	0.00	1.83	0.94	0.59	0.00	0.00	0.00
Initial Queue (Qb), veh	0.0	0.0	0.0	0.0	0.0	0.0	0.0	0.0
Final (Residual) Queue (Qe), veh	0.0	0.0	13.9	0.0	0.0	0.0	0.0	0.0
Saturated Delay (ds), s/veh	0.0	0.0	0.0	0.0	0.0	0.0	0.0	0.0
Saturated Queue (Qs), veh	0.0	0.0	0.0	0.0	0.0	0.0	0.0	0.0
Saturated Capacity (cs), veh/h	0.0	0.0	0.0	0.0	0.0	0.0	0.0	0.0
Initial Queue Clear Time (tc), h	0.0	0.0	0.3	0.0	0.0	0.0	0.0	0.0
Middle Lane Group Data								
Assigned Movement	0	2	8	4	0	6	0	0
Lane Assignment		T	T	T		T		
Lanes in Group	0	2	1	1	0	2	0	0
Group Volume (v), veh/h	0.0	1171.3	211.3	241.0	0.0	1367.0	0.0	0.0
Group Sat. Flow (s), veh/h/ln	0.0	1695.1	1862.7	1862.7	0.0	1695.1	0.0	0.0
Queue Serve Time (g_s), s	0.0	42.4	14.4	16.6	0.0	51.7	0.0	0.0
Cycle Queue Clear Time (g_c), s	0.0	42.4	14.4	16.6	0.0	51.7	0.0	0.0
Lane Group Capacity (c), veh/h	0.0	1405.5	339.2	347.5	0.0	1499.0	0.0	0.0
Volume-to-Capacity Ratio (X)	0.000	0.833	0.623	0.694	0.000	0.912	0.000	0.000
Available Capacity (c_a), veh/h	0.0	1405.5	339.2	366.4	0.0	1531.2	0.0	0.0
Upstream Filter Factor (I)	0.000	1.000	1.000	1.000	0.000	1.000	0.000	0.000
Uniform Delay (d1), s/veh	0.0	35.9	51.8	52.2	0.0	35.8	0.0	0.0
Incremental Delay (d2), s/veh	0.0	5.9	3.5	5.2	0.0	8.5	0.0	0.0
Initial Queue Delay (d3), s/veh	0.0	0.0	0.0	0.0	0.0	0.0	0.0	0.0
Control Delay (d), s/veh	0.0	41.9	55.3	57.4	0.0	44.3	0.0	0.0
First-Term Queue (Q1), veh/ln	0.0	17.4	6.7	7.8	0.0	21.1	0.0	0.0
Second-Term Queue (Q2), veh/ln	0.0	1.2	0.3	0.5	0.0	1.8	0.0	0.0
Third-Term Queue (Q3), veh/ln	0.0	0.0	0.0	0.0	0.0	0.0	0.0	0.0
Percentile bk-of-que factor (f_B%)	0.000	1.000	1.000	1.000	0.000	1.000	0.000	0.000
Percentile Back of Queue (Q%), veh/ln	0.0	18.6	7.1	8.3	0.0	22.8	0.0	0.0
Percentile Storage Ratio (RQ%)	0.00	1.03	0.10	0.61	0.00	0.79	0.00	0.00

Initial Queue (Qb), veh	0.0	0.0	0.0	0.0	0.0	0.0	0.0	0.0
Final (Residual) Queue (Qe), veh	0.0	0.0	0.0	0.0	0.0	0.0	0.0	0.0
Saturated Delay (ds), s/veh	0.0	0.0	0.0	0.0	0.0	0.0	0.0	0.0
Saturated Queue (Qs), veh	0.0	0.0	0.0	0.0	0.0	0.0	0.0	0.0
Saturated Capacity (cs), veh/h	0.0	0.0	0.0	0.0	0.0	0.0	0.0	0.0
Initial Queue Clear Time (tc), h	0.0	0.0	0.0	0.0	0.0	0.0	0.0	0.0

Right Lane Group Data								
Assigned Movement	0	12	18	14	0	16	0	0
Lane Assignment		T+R	T+R	T+R		T+R		
Lanes in Group	0	1	1	1	0	1	0	0
Group Volume (v), veh/h	0.0	621.3	209.0	226.0	0.0	716.0	0.0	0.0
Group Sat. Flow (s), veh/h/ln	0.0	1794.9	1833.1	1706.8	0.0	1757.2	0.0	0.0
Queue Serve Time (g_s), s	0.0	42.5	14.4	17.0	0.0	52.7	0.0	0.0
Cycle Queue Clear Time (g_c), s	0.0	42.5	14.4	17.0	0.0	52.7	0.0	0.0
Prot RT Sat Flow Rate (s_R), veh/h/ln	0.0	0.0	0.0	0.0	0.0	0.0	0.0	0.0
Prot RT Eff. Green (g_R), s	0.0	0.0	0.0	0.0	0.0	0.0	0.0	0.0
Proportion RT Outside Lane (P_R)	0.000	0.214	0.092	0.518	0.000	0.340	0.000	0.000
Lane Group Capacity (c), veh/h	0.0	744.1	333.8	318.4	0.0	777.0	0.0	0.0
Volume-to-Capacity Ratio (X)	0.000	0.835	0.626	0.710	0.000	0.921	0.000	0.000
Available Capacity (c_a), veh/h	0.0	744.1	333.8	335.7	0.0	793.6	0.0	0.0
Upstream Filter Factor (I)	0.000	1.000	1.000	1.000	0.000	1.000	0.000	0.000
Uniform Delay (d1), s/veh	0.0	36.0	51.8	52.4	0.0	36.0	0.0	0.0
Incremental Delay (d2), s/veh	0.0	10.7	3.7	6.4	0.0	15.9	0.0	0.0
Initial Queue Delay (d3), s/veh	0.0	0.0	0.0	0.0	0.0	0.0	0.0	0.0
Control Delay (d), s/veh	0.0	46.7	55.5	58.8	0.0	51.9	0.0	0.0
First-Term Queue (Q1), veh/ln	0.0	18.5	6.7	7.3	0.0	22.2	0.0	0.0
Second-Term Queue (Q2), veh/ln	0.0	2.2	0.3	0.6	0.0	3.4	0.0	0.0
Third-Term Queue (Q3), veh/ln	0.0	0.0	0.0	0.0	0.0	0.0	0.0	0.0
Percentile bk-of-que factor (f_B%)	0.000	1.000	1.000	1.000	0.000	1.000	0.000	0.000
Percentile Back of Queue (Q%), veh/ln	0.0	20.7	7.0	7.9	0.0	25.6	0.0	0.0
Percentile Storage Ratio (RQ%)	0.00	1.15	0.10	0.58	0.00	0.89	0.00	0.00
Initial Queue (Qb), veh	0.0	0.0	0.0	0.0	0.0	0.0	0.0	0.0
Final (Residual) Queue (Qe), veh	0.0	0.0	0.0	0.0	0.0	0.0	0.0	0.0
Saturated Delay (ds), s/veh	0.0	0.0	0.0	0.0	0.0	0.0	0.0	0.0
Saturated Queue (Qs), veh	0.0	0.0	0.0	0.0	0.0	0.0	0.0	0.0
Saturated Capacity (cs), veh/h	0.0	0.0	0.0	0.0	0.0	0.0	0.0	0.0
Initial Queue Clear Time (tc), h	0.0	0.0	0.0	0.0	0.0	0.0	0.0	0.0

Intersection Summary	
HCM Average Control Delay	57.5
HCM Level of Service	E

Movement	EBL	EBT	EBR	WBL	WBT	WBR	NEL	NET	NER	SWL	SWT	SWR
Lane Configurations												
Volume (veh/h)	37	6	0	0	4	12	64	2071	21	0	0	0
Sign Control		Stop			Stop			Free			Free	
Grade		0%			0%			0%			0%	
Peak Hour Factor	0.95	0.95	0.95	0.95	0.95	0.95	0.95	0.95	0.95	0.95	0.95	0.95
Hourly flow rate (vph)	39	6	0	0	4	13	67	2180	22	0	0	0
Pedestrians												
Lane Width (ft)												
Walking Speed (ft/s)												
Percent Blockage												
Right turn flare (veh)												
Median type								None			None	
Median storage veh)												
Upstream signal (ft)												
pX, platoon unblocked												
vC, conflicting volume	876	2337	0	2329	2326	738	0			2202		
vC1, stage 1 conf vol												
vC2, stage 2 conf vol												
vCu, unblocked vol	876	2337	0	2329	2326	738	0			2202		
tC, single (s)	7.5	6.5	6.9	7.5	6.5	6.9	4.1			4.1		
tC, 2 stage (s)												
tF (s)	3.5	4.0	3.3	3.5	4.0	3.3	2.2			2.2		
p0 queue free %	81	82	100	100	88	96	96			100		
cM capacity (veh/h)	206	35	1084	16	35	361	1622			236		

Direction, Lane #	EB 1	WB 1	NE 1	NE 2	NE 3
Volume Total	45	17	612	1090	567
Volume Left	39	0	67	0	0
Volume Right	0	13	0	0	22
cSH	122	109	1622	1700	1700
Volume to Capacity	0.37	0.15	0.04	0.64	0.33
Queue Length 95th (ft)	38	13	3	0	0
Control Delay (s)	51.0	44.0	1.2	0.0	0.0
Lane LOS	F	E	A		
Approach Delay (s)	51.0	44.0	0.3		
Approach LOS	F	E			

Intersection Summary			
Average Delay	1.6		
Intersection Capacity Utilization	57.5%	ICU Level of Service	B
Analysis Period (min)	15		

Movement	EBL	EBT	EBR	WBL	WBT	WBR	NEL	NET	NER	SWL	SWT	SWR
Lane Configurations												
Volume (veh/h)	0	4	0	0	4	0	2	2262	4	0	0	0
Sign Control		Stop			Stop			Free			Free	
Grade		0%			0%			0%			0%	
Peak Hour Factor	0.89	0.89	0.89	0.89	0.89	0.89	0.89	0.89	0.89	0.89	0.89	0.89
Hourly flow rate (vph)	0	4	0	0	4	0	2	2542	4	0	0	0
Pedestrians												
Lane Width (ft)												
Walking Speed (ft/s)												
Percent Blockage												
Right turn flare (veh)												
Median type								None			None	
Median storage veh)												
Upstream signal (ft)												
pX, platoon unblocked												
vC, conflicting volume	854	2551	0	2551	2548	849	0			2546		
vC1, stage 1 conf vol												
vC2, stage 2 conf vol												
vCu, unblocked vol	854	2551	0	2551	2548	849	0			2546		
tC, single (s)	7.5	6.5	6.9	7.5	6.5	6.9	4.1			4.1		
tC, 2 stage (s)												
tF (s)	3.5	4.0	3.3	3.5	4.0	3.3	2.2			2.2		
p0 queue free %	100	83	100	100	83	100	100			100		
cM capacity (veh/h)	219	26	1084	12	26	304	1622			172		

Direction, Lane #	EB 1	WB 1	NE 1	NE 2	NE 3
Volume Total	4	4	638	1271	640
Volume Left	0	0	2	0	0
Volume Right	0	0	0	0	4
cSH	26	26	1622	1700	1700
Volume to Capacity	0.17	0.17	0.00	0.75	0.38
Queue Length 95th (ft)	13	13	0	0	0
Control Delay (s)	168.4	167.7	0.0	0.0	0.0
Lane LOS	F	F	A		
Approach Delay (s)	168.4	167.7	0.0		
Approach LOS	F	F			

Intersection Summary			
Average Delay	0.6		
Intersection Capacity Utilization	53.8%	ICU Level of Service	A
Analysis Period (min)	15		

Movement	EBL	EBR	NBL	NBT	SBT	SBR
Lane Configurations						
Volume (veh/h)	1	2	1	171	118	0
Sign Control	Stop			Free	Free	
Grade	0%			0%	0%	
Peak Hour Factor	0.92	0.92	0.92	0.92	0.92	0.92
Hourly flow rate (vph)	1	2	1	186	128	0
Pedestrians						
Lane Width (ft)						
Walking Speed (ft/s)						
Percent Blockage						
Right turn flare (veh)						
Median type				None	None	
Median storage veh)						
Upstream signal (ft)						
pX, platoon unblocked						
vC, conflicting volume	316	128	128			
vC1, stage 1 conf vol						
vC2, stage 2 conf vol						
vCu, unblocked vol	316	128	128			
tC, single (s)	6.4	6.2	4.1			
tC, 2 stage (s)						
tF (s)	3.5	3.3	2.2			
p0 queue free %	100	100	100			
cM capacity (veh/h)	676	922	1458			

Direction, Lane #	EB 1	NB 1	SB 1
Volume Total	3	187	128
Volume Left	1	1	0
Volume Right	2	0	0
cSH	822	1458	1700
Volume to Capacity	0.00	0.00	0.08
Queue Length 95th (ft)	0	0	0
Control Delay (s)	9.4	0.0	0.0
Lane LOS	A	A	
Approach Delay (s)	9.4	0.0	0.0
Approach LOS	A		

Intersection Summary			
Average Delay	0.1		
Intersection Capacity Utilization	19.8%	ICU Level of Service	A
Analysis Period (min)	15		

Movement	EBL	EBR	NBL	NBT	SBT	SBR
Lane Configurations						
Volume (veh/h)	1	1	1	173	117	1
Sign Control	Stop			Free	Free	
Grade	0%			0%	0%	
Peak Hour Factor	0.92	0.92	0.92	0.92	0.92	0.92
Hourly flow rate (vph)	1	1	1	188	127	1
Pedestrians						
Lane Width (ft)						
Walking Speed (ft/s)						
Percent Blockage						
Right turn flare (veh)						
Median type				None	None	
Median storage veh)						
Upstream signal (ft)						
pX, platoon unblocked						
vC, conflicting volume	318	128	128			
vC1, stage 1 conf vol						
vC2, stage 2 conf vol						
vCu, unblocked vol	318	128	128			
tC, single (s)	6.4	6.2	4.1			
tC, 2 stage (s)						
tF (s)	3.5	3.3	2.2			
p0 queue free %	100	100	100			
cM capacity (veh/h)	675	922	1458			

Direction, Lane #	EB 1	NB 1	SB 1
Volume Total	2	189	128
Volume Left	1	1	0
Volume Right	1	0	1
cSH	779	1458	1700
Volume to Capacity	0.00	0.00	0.08
Queue Length 95th (ft)	0	0	0
Control Delay (s)	9.6	0.0	0.0
Lane LOS	A	A	
Approach Delay (s)	9.6	0.0	0.0
Approach LOS	A		

Intersection Summary			
Average Delay	0.1		
Intersection Capacity Utilization	19.9%	ICU Level of Service	A
Analysis Period (min)	15		

Movement	EBL	EBR	NBL	NBT	SBT	SBR
Lane Configurations						
Volume (veh/h)	2	3	3	168	107	1
Sign Control	Stop			Free	Free	
Grade	0%			0%	0%	
Peak Hour Factor	0.92	0.92	0.92	0.92	0.92	0.92
Hourly flow rate (vph)	2	3	3	183	116	1
Pedestrians						
Lane Width (ft)						
Walking Speed (ft/s)						
Percent Blockage						
Right turn flare (veh)						
Median type				None	None	
Median storage veh)						
Upstream signal (ft)						
pX, platoon unblocked						
vC, conflicting volume	306	117	117			
vC1, stage 1 conf vol						
vC2, stage 2 conf vol						
vCu, unblocked vol	306	117	117			
tC, single (s)	6.4	6.2	4.1			
tC, 2 stage (s)						
tF (s)	3.5	3.3	2.2			
p0 queue free %	100	100	100			
cM capacity (veh/h)	685	935	1471			

Direction, Lane #	EB 1	NB 1	SB 1
Volume Total	5	186	117
Volume Left	2	3	0
Volume Right	3	0	1
cSH	816	1471	1700
Volume to Capacity	0.01	0.00	0.07
Queue Length 95th (ft)	1	0	0
Control Delay (s)	9.4	0.1	0.0
Lane LOS	A	A	
Approach Delay (s)	9.4	0.1	0.0
Approach LOS	A		

Intersection Summary			
Average Delay	0.3		
Intersection Capacity Utilization	21.2%	ICU Level of Service	A
Analysis Period (min)	15		

Movement	EBL	EBR	NBL	NBT	SBT	SBR
Lane Configurations						
Volume (veh/h)	18	22	6	149	76	14
Sign Control	Stop			Free	Free	
Grade	0%			0%	0%	
Peak Hour Factor	0.92	0.92	0.92	0.92	0.92	0.92
Hourly flow rate (vph)	20	24	7	162	83	15
Pedestrians						
Lane Width (ft)						
Walking Speed (ft/s)						
Percent Blockage						
Right turn flare (veh)						
Median type				None	None	
Median storage veh)						
Upstream signal (ft)						
pX, platoon unblocked						
vC, conflicting volume	265	90	98			
vC1, stage 1 conf vol						
vC2, stage 2 conf vol						
vCu, unblocked vol	265	90	98			
tC, single (s)	6.4	6.2	4.1			
tC, 2 stage (s)						
tF (s)	3.5	3.3	2.2			
p0 queue free %	97	98	100			
cM capacity (veh/h)	721	968	1495			

Direction, Lane #	EB 1	NB 1	SB 1
Volume Total	43	168	98
Volume Left	20	7	0
Volume Right	24	0	15
cSH	838	1495	1700
Volume to Capacity	0.05	0.00	0.06
Queue Length 95th (ft)	4	0	0
Control Delay (s)	9.5	0.3	0.0
Lane LOS	A	A	
Approach Delay (s)	9.5	0.3	0.0
Approach LOS	A		

Intersection Summary			
Average Delay	1.5		
Intersection Capacity Utilization	22.7%	ICU Level of Service	A
Analysis Period (min)	15		

Movement	EBL	EBT	EBR	WBL	WBT	WBR	NBL	NBT	NBR	SBL	SBT	SBR
Lane Configurations												
Sign Control		Stop			Stop			Stop			Stop	
Volume (vph)	4	104	34	30	109	2	25	127	14	2	4	5
Peak Hour Factor	0.92	0.92	0.92	0.92	0.92	0.92	0.92	0.92	0.92	0.92	0.92	0.92
Hourly flow rate (vph)	4	113	37	33	118	2	27	138	15	2	4	5

Direction, Lane #	EB 1	WB 1	NB 1	SB 1
Volume Total (vph)	154	153	180	12
Volume Left (vph)	4	33	27	2
Volume Right (vph)	37	2	15	5
Hadj (s)	-0.10	0.07	0.01	-0.20
Departure Headway (s)	4.5	4.6	4.7	4.7
Degree Utilization, x	0.19	0.20	0.23	0.02
Capacity (veh/h)	770	736	730	701
Control Delay (s)	8.5	8.8	9.1	7.7
Approach Delay (s)	8.5	8.8	9.1	7.7
Approach LOS	A	A	A	A

Intersection Summary			
Delay	8.8		
HCM Level of Service	A		
Intersection Capacity Utilization	36.6%	ICU Level of Service	A
Analysis Period (min)	15		

HCM Unsignalized Intersection Capacity Analysis
1: SW 97th Ave. & SW 174th St.

2/11/2015

Movement	EBL	EBT	EBR	WBL	WBT	WBR	NBL	NBT	NBR	SBL	SBT	SBR
Lane Configurations												
Sign Control		Stop			Stop			Stop			Stop	
Volume (vph)	3	138	41	34	150	0	31	10	14	1	1	4
Peak Hour Factor	0.90	0.90	0.90	0.90	0.90	0.90	0.90	0.90	0.90	0.90	0.90	0.90
Hourly flow rate (vph)	3	153	46	38	167	0	34	11	16	1	1	4

Direction, Lane #	EB 1	WB 1	NB 1	SB 1
Volume Total (vph)	202	204	61	7
Volume Left (vph)	3	38	34	1
Volume Right (vph)	46	0	16	4
Hadj (s)	-0.10	0.07	-0.01	-0.33
Departure Headway (s)	4.2	4.3	4.8	4.5
Degree Utilization, x	0.24	0.25	0.08	0.01
Capacity (veh/h)	837	800	690	709
Control Delay (s)	8.5	8.8	8.2	7.6
Approach Delay (s)	8.5	8.8	8.2	7.6
Approach LOS	A	A	A	A

Intersection Summary			
Delay	8.6		
HCM Level of Service	A		
Intersection Capacity Utilization	37.9%	ICU Level of Service	A
Analysis Period (min)	15		

Lane Group	EBL	NBT	SBT	NET
Lane Group Flow (vph)	134	171	54	2482
v/c Ratio	0.74	0.49	0.23	0.73
Control Delay	101.1	18.0	74.4	21.2
Queue Delay	0.0	0.0	0.0	0.0
Total Delay	101.1	18.0	74.4	21.2
Queue Length 50th (ft)	156	17	58	657
Queue Length 95th (ft)	237	101	112	804
Internal Link Dist (ft)	257	1041	665	1300
Turn Bay Length (ft)				
Base Capacity (vph)	269	350	231	3403
Starvation Cap Reductn	0	0	0	0
Spillback Cap Reductn	0	0	0	0
Storage Cap Reductn	0	0	0	0
Reduced v/c Ratio	0.50	0.49	0.23	0.73

Intersection Summary

Movement	EBL	EBR	NBL	NBT	NBR	SBT	SBR	NEL2	NEL	NET	NER
Lane Configurations											
Volume (vph)	4	125	8	8	149	26	26	4	21	2314	44
Ideal Flow (vphpl)	1900	1900	1900	1900	1900	1900	1900	1900	1900	1900	1900
Total Lost time (s)	5.0			5.0		5.0				5.0	
Lane Util. Factor	1.00			1.00		1.00				0.91	
Frt	0.87			0.88		0.93				1.00	
Flt Protected	1.00			1.00		1.00				1.00	
Satd. Flow (prot)	1616			1631		1737				5069	
Flt Permitted	1.00			0.99		1.00				1.00	
Satd. Flow (perm)	1616			1615		1737				5069	
Peak-hour factor, PHF	0.96	0.96	0.96	0.96	0.96	0.96	0.96	0.96	0.96	0.96	0.96
Adj. Flow (vph)	4	130	8	8	155	27	27	4	22	2410	46
RTOR Reduction (vph)	0	0	0	134	0	0	0	0	0	1	0
Lane Group Flow (vph)	134	0	0	37	0	54	0	0	0	2481	0
Parking (#/hr)		0									
Turn Type	NA		Perm	NA		NA		Perm	Perm	NA	
Protected Phases	3			4		8				6	
Permitted Phases			4					6	6		
Actuated Green, G (s)	20.2			24.0		24.0				121.1	
Effective Green, g (s)	20.2			24.0		24.0				121.1	
Actuated g/C Ratio	0.11			0.13		0.13				0.67	
Clearance Time (s)	5.0			5.0		5.0				5.0	
Vehicle Extension (s)	3.0			3.0		3.0				3.0	
Lane Grp Cap (vph)	181			215		231				3405	
v/s Ratio Prot	c0.08					c0.03					
v/s Ratio Perm				0.02						0.49	
v/c Ratio	0.74			0.17		0.23				0.73	
Uniform Delay, d1	77.5			69.3		69.9				19.0	
Progression Factor	1.00			1.00		1.00				1.00	
Incremental Delay, d2	15.0			1.7		2.4				1.4	
Delay (s)	92.5			71.0		72.3				20.4	
Level of Service	F			E		E				C	
Approach Delay (s)	92.5			71.0		72.3				20.4	
Approach LOS	F			E		E				C	

Intersection Summary			
HCM Average Control Delay	27.9	HCM Level of Service	C
HCM Volume to Capacity ratio	0.66		
Actuated Cycle Length (s)	180.3	Sum of lost time (s)	15.0
Intersection Capacity Utilization	83.4%	ICU Level of Service	E
Analysis Period (min)	15		

c Critical Lane Group

Movement	EBL	EBR	NBL	NBT	SBT	SBR
Lane Configurations						
Volume (veh/h)	6	82	21	150	113	10
Sign Control	Stop			Free	Free	
Grade	0%			0%	0%	
Peak Hour Factor	0.92	0.92	0.92	0.92	0.92	0.92
Hourly flow rate (vph)	7	89	23	163	123	11
Pedestrians	10					
Lane Width (ft)	12.0					
Walking Speed (ft/s)	4.0					
Percent Blockage	1					
Right turn flare (veh)						
Median type				None	None	
Median storage veh)						
Upstream signal (ft)					1121	
pX, platoon unblocked						
vC, conflicting volume	347	138	144			
vC1, stage 1 conf vol						
vC2, stage 2 conf vol						
vCu, unblocked vol	347	138	144			
tC, single (s)	6.4	6.2	4.1			
tC, 2 stage (s)						
tF (s)	3.5	3.3	2.2			
p0 queue free %	99	90	98			
cM capacity (veh/h)	634	902	1427			

Direction, Lane #	EB 1	NB 1	SB 1
Volume Total	96	186	134
Volume Left	7	23	0
Volume Right	89	0	11
cSH	877	1427	1700
Volume to Capacity	0.11	0.02	0.08
Queue Length 95th (ft)	9	1	0
Control Delay (s)	9.6	1.0	0.0
Lane LOS	A	A	
Approach Delay (s)	9.6	1.0	0.0
Approach LOS	A		

Intersection Summary			
Average Delay	2.7		
Intersection Capacity Utilization	33.0%	ICU Level of Service	A
Analysis Period (min)	15		

Movement	WBL	WBR	NBT	NBR	SBL	SBT
Lane Configurations						
Volume (veh/h)	27	26	145	20	14	133
Sign Control	Stop		Free			Free
Grade	0%		0%			0%
Peak Hour Factor	0.94	0.94	0.94	0.94	0.94	0.94
Hourly flow rate (vph)	29	28	154	21	15	141
Pedestrians						
Lane Width (ft)						
Walking Speed (ft/s)						
Percent Blockage						
Right turn flare (veh)						
Median type			None			None
Median storage veh)						
Upstream signal (ft)						
pX, platoon unblocked						
vC, conflicting volume	336	165			176	
vC1, stage 1 conf vol						
vC2, stage 2 conf vol						
vCu, unblocked vol	336	165			176	
tC, single (s)	6.4	6.2			4.1	
tC, 2 stage (s)						
tF (s)	3.5	3.3			2.2	
p0 queue free %	96	97			99	
cM capacity (veh/h)	652	880			1401	

Direction, Lane #	WB 1	NB 1	SB 1
Volume Total	56	176	156
Volume Left	29	0	15
Volume Right	28	21	0
cSH	747	1700	1401
Volume to Capacity	0.08	0.10	0.01
Queue Length 95th (ft)	6	0	1
Control Delay (s)	10.2	0.0	0.8
Lane LOS	B		A
Approach Delay (s)	10.2	0.0	0.8
Approach LOS	B		

Intersection Summary			
Average Delay	1.8		
Intersection Capacity Utilization	28.7%	ICU Level of Service	A
Analysis Period (min)	15		

Movement	EBL	EBR	NBL	NBT	SBT	SBR
Lane Configurations						
Volume (veh/h)	6	51	16	173	164	4
Sign Control	Stop			Free	Free	
Grade	0%			0%	0%	
Peak Hour Factor	0.93	0.93	0.93	0.93	0.93	0.93
Hourly flow rate (vph)	6	55	17	186	176	4
Pedestrians						
Lane Width (ft)						
Walking Speed (ft/s)						
Percent Blockage						
Right turn flare (veh)						
Median type				None	None	
Median storage veh)						
Upstream signal (ft)				1230		
pX, platoon unblocked						
vC, conflicting volume	399	178	181			
vC1, stage 1 conf vol						
vC2, stage 2 conf vol						
vCu, unblocked vol	399	178	181			
tC, single (s)	6.4	6.2	4.1			
tC, 2 stage (s)						
tF (s)	3.5	3.3	2.2			
p0 queue free %	99	94	99			
cM capacity (veh/h)	599	864	1395			

Direction, Lane #	EB 1	NB 1	SB 1
Volume Total	61	203	181
Volume Left	6	17	0
Volume Right	55	0	4
cSH	826	1395	1700
Volume to Capacity	0.07	0.01	0.11
Queue Length 95th (ft)	6	1	0
Control Delay (s)	9.7	0.7	0.0
Lane LOS	A	A	
Approach Delay (s)	9.7	0.7	0.0
Approach LOS	A		

Intersection Summary			
Average Delay	1.7		
Intersection Capacity Utilization	32.3%	ICU Level of Service	A
Analysis Period (min)	15		

Movement	EBL	EBT	EBR	WBL	WBT	WBR	NBL	NBT	NBR	SBL	SBT	SBR
Lane Configurations												
Volume (veh/h)	6	4	29	4	1	6	3	183	2	2	197	8
Sign Control		Stop			Stop			Free			Free	
Grade		0%			0%			0%			0%	
Peak Hour Factor	0.87	0.87	0.87	0.87	0.87	0.87	0.87	0.87	0.87	0.87	0.87	0.87
Hourly flow rate (vph)	7	5	33	5	1	7	3	210	2	2	226	9
Pedestrians												
Lane Width (ft)												
Walking Speed (ft/s)												
Percent Blockage												
Right turn flare (veh)												
Median type								None			None	
Median storage veh)												
Upstream signal (ft)								904				
pX, platoon unblocked	0.97	0.97		0.97	0.97	0.97				0.97		
vC, conflicting volume	461	455	231	490	459	211	236			213		
vC1, stage 1 conf vol												
vC2, stage 2 conf vol												
vCu, unblocked vol	430	424	231	459	428	173	236			174		
tC, single (s)	7.1	6.5	6.2	7.1	6.5	6.2	4.1			4.1		
tC, 2 stage (s)												
tF (s)	3.5	4.0	3.3	3.5	4.0	3.3	2.2			2.2		
p0 queue free %	99	99	96	99	100	99	100			100		
cM capacity (veh/h)	513	505	808	472	502	845	1332			1362		

Direction, Lane #	EB 1	WB 1	NB 1	SB 1
Volume Total	45	13	216	238
Volume Left	7	5	3	2
Volume Right	33	7	2	9
cSH	703	626	1332	1362
Volume to Capacity	0.06	0.02	0.00	0.00
Queue Length 95th (ft)	5	2	0	0
Control Delay (s)	10.5	10.9	0.1	0.1
Lane LOS	B	B	A	A
Approach Delay (s)	10.5	10.9	0.1	0.1
Approach LOS	B	B		

Intersection Summary			
Average Delay	1.3		
Intersection Capacity Utilization	21.9%	ICU Level of Service	A
Analysis Period (min)	15		

Movement	EBL	EBT	EBR	WBL	WBT	WBR	NBL	NBT	NBR	SBL	SBT	SBR
Lane Configurations												
Volume (veh/h)	1	0	2	0	0	0	1	192	0	1	221	2
Sign Control		Stop			Stop			Free			Free	
Grade		0%			0%			0%			0%	
Peak Hour Factor	0.91	0.91	0.91	0.91	0.91	0.91	0.91	0.91	0.91	0.91	0.91	0.91
Hourly flow rate (vph)	1	0	2	0	0	0	1	211	0	1	243	2
Pedestrians												
Lane Width (ft)												
Walking Speed (ft/s)												
Percent Blockage												
Right turn flare (veh)												
Median type								None			None	
Median storage veh)												
Upstream signal (ft)								601				
pX, platoon unblocked	0.93	0.93		0.93	0.93	0.93				0.93		
vC, conflicting volume	459	459	244	462	460	211	245			211		
vC1, stage 1 conf vol												
vC2, stage 2 conf vol												
vCu, unblocked vol	385	385	244	387	386	119	245			119		
tC, single (s)	7.1	6.5	6.2	7.1	6.5	6.2	4.1			4.1		
tC, 2 stage (s)												
tF (s)	3.5	4.0	3.3	3.5	4.0	3.3	2.2			2.2		
p0 queue free %	100	100	100	100	100	100	100			100		
cM capacity (veh/h)	535	511	795	531	511	871	1321			1371		

Direction, Lane #	EB 1	WB 1	NB 1	SB 1
Volume Total	3	0	212	246
Volume Left	1	0	1	1
Volume Right	2	0	0	2
cSH	684	1700	1321	1371
Volume to Capacity	0.00	0.00	0.00	0.00
Queue Length 95th (ft)	0	0	0	0
Control Delay (s)	10.3	0.0	0.0	0.0
Lane LOS	B	A	A	A
Approach Delay (s)	10.3	0.0	0.0	0.0
Approach LOS	B	A		

Intersection Summary			
Average Delay	0.1		
Intersection Capacity Utilization	22.4%	ICU Level of Service	A
Analysis Period (min)	15		

Movement	EBL	EBT	EBR	WBL	WBT	WBR	NBL	NBT	NBR	SBL	SBT	SBR
Lane Configurations												
Volume (veh/h)	8	1	68	1	2	1	10	187	1	1	218	1
Sign Control		Stop			Stop			Free			Free	
Grade		0%			0%			0%			0%	
Peak Hour Factor	0.93	0.93	0.93	0.93	0.93	0.93	0.93	0.93	0.93	0.93	0.93	0.93
Hourly flow rate (vph)	9	1	73	1	2	1	11	201	1	1	234	1
Pedestrians												
Lane Width (ft)												
Walking Speed (ft/s)												
Percent Blockage												
Right turn flare (veh)												
Median type								None			None	
Median storage veh)												
Upstream signal (ft)								300				
pX, platoon unblocked	0.89	0.89		0.89	0.89	0.89				0.89		
vC, conflicting volume	462	461	235	534	461	202	235			202		
vC1, stage 1 conf vol												
vC2, stage 2 conf vol												
vCu, unblocked vol	338	336	235	418	336	46	235			47		
tC, single (s)	7.1	6.5	6.2	7.1	6.5	6.2	4.1			4.1		
tC, 2 stage (s)												
tF (s)	3.5	4.0	3.3	3.5	4.0	3.3	2.2			2.2		
p0 queue free %	98	100	91	100	100	100	99			100		
cM capacity (veh/h)	544	517	804	439	517	914	1332			1394		

Direction, Lane #	EB 1	WB 1	NB 1	SB 1
Volume Total	83	4	213	237
Volume Left	9	1	11	1
Volume Right	73	1	1	1
cSH	761	553	1332	1394
Volume to Capacity	0.11	0.01	0.01	0.00
Queue Length 95th (ft)	9	1	1	0
Control Delay (s)	10.3	11.6	0.5	0.0
Lane LOS	B	B	A	A
Approach Delay (s)	10.3	11.6	0.5	0.0
Approach LOS	B	B		

Intersection Summary			
Average Delay	1.9		
Intersection Capacity Utilization	29.0%	ICU Level of Service	A
Analysis Period (min)	15		

Lane Group	EBL	EBT	EBR	WBL	WBT	NBL	NBT	SBL	SBT
Lane Group Flow (vph)	42	526	193	467	627	163	450	20	298
v/c Ratio	0.06	0.83	0.35	0.83	0.48	0.46	0.65	0.07	0.54
Control Delay	10.5	57.3	20.4	33.9	38.8	46.4	44.6	42.3	60.8
Queue Delay	0.0	0.0	0.0	0.0	0.0	0.0	0.0	0.0	0.0
Total Delay	10.5	57.3	20.4	33.9	38.8	46.4	44.6	42.3	60.8
Queue Length 50th (ft)	15	425	59	257	255	124	144	14	140
Queue Length 95th (ft)	31	#676	147	404	372	223	235	41	219
Internal Link Dist (ft)		1915			531		229		156
Turn Bay Length (ft)	130			95		155		130	
Base Capacity (vph)	777	780	666	731	1582	355	761	307	632
Starvation Cap Reductn	0	0	0	0	0	0	0	0	0
Spillback Cap Reductn	0	0	0	0	0	0	0	0	0
Storage Cap Reductn	0	0	0	0	0	0	0	0	0
Reduced v/c Ratio	0.05	0.67	0.29	0.64	0.40	0.46	0.59	0.07	0.47

Intersection Summary

95th percentile volume exceeds capacity, queue may be longer.
Queue shown is maximum after two cycles.

Movement	EBL	EBT	EBR	WBL	WBT	WBR	NBL	NBT	NBR	SBL	SBT	SBR
Lane Configurations												
Volume (vph)	39	484	178	430	566	11	150	188	226	18	227	47
Ideal Flow (vphpl)	1900	1900	1900	1900	1900	1900	1900	1900	1900	1900	1900	1900
Total Lost time (s)	3.0	3.0	5.0	3.0	3.0		3.0	3.0		3.0	3.0	
Lane Util. Factor	1.00	1.00	1.00	1.00	0.95		1.00	0.95		1.00	0.95	
Frt	1.00	1.00	0.85	1.00	1.00		1.00	0.92		1.00	0.97	
Flt Protected	0.95	1.00	1.00	0.95	1.00		0.95	1.00		0.95	1.00	
Satd. Flow (prot)	1770	1863	1583	1770	3529		1770	3249		1770	3448	
Flt Permitted	0.32	1.00	1.00	0.22	1.00		0.46	1.00		0.43	1.00	
Satd. Flow (perm)	592	1863	1583	416	3529		853	3249		808	3448	
Peak-hour factor, PHF	0.92	0.92	0.92	0.92	0.92	0.92	0.92	0.92	0.92	0.92	0.92	0.92
Adj. Flow (vph)	42	526	193	467	615	12	163	204	246	20	247	51
RTOR Reduction (vph)	0	0	80	0	1	0	0	122	0	0	9	0
Lane Group Flow (vph)	42	526	113	467	626	0	163	328	0	20	289	0
Turn Type	pm+pt	NA	custom	pm+pt	NA		custom	NA		custom	NA	
Protected Phases	1 2	2 4		1 3	3 4		5 6	6 8		5 7	7 8	
Permitted Phases	2 4		4	3 4			8			8		
Actuated Green, G (s)	79.9	47.2	43.1	78.1	51.4		36.6	21.9		30.9	22.2	
Effective Green, g (s)	79.9	47.2	43.1	78.1	51.4		36.6	21.9		30.9	22.2	
Actuated g/C Ratio	0.55	0.32	0.29	0.53	0.35		0.25	0.15		0.21	0.15	
Clearance Time (s)			5.0									
Vehicle Extension (s)			3.0									
Lane Grp Cap (vph)	619	601	466	546	1239		339	486		265	523	
v/s Ratio Prot	0.02	c0.28		c0.20	0.18		c0.07	c0.10		0.01	c0.08	
v/s Ratio Perm	0.02		0.07	0.25			0.05			0.01		
v/c Ratio	0.07	0.88	0.24	0.86	0.51		0.48	0.67		0.08	0.55	
Uniform Delay, d1	15.8	46.8	39.2	28.3	37.5		45.4	58.9		46.1	57.5	
Progression Factor	1.00	1.00	1.00	1.00	1.00		1.00	1.00		1.00	1.00	
Incremental Delay, d2	0.0	13.4	0.3	12.4	0.3		1.1	3.7		0.1	1.3	
Delay (s)	15.9	60.2	39.5	40.7	37.8		46.5	62.5		46.2	58.8	
Level of Service	B	E	D	D	D		D	E		D	E	
Approach Delay (s)		52.5			39.0			58.3			58.0	
Approach LOS		D			D			E			E	

Intersection Summary			
HCM Average Control Delay	49.1	HCM Level of Service	D
HCM Volume to Capacity ratio	0.75		
Actuated Cycle Length (s)	146.4	Sum of lost time (s)	21.0
Intersection Capacity Utilization	79.3%	ICU Level of Service	D
Analysis Period (min)	15		
c Critical Lane Group			

Movement	EBL	EBT	WBT	WBR	SBL	SBR
Lane Configurations						
Volume (veh/h)	230	646	797	10	24	228
Sign Control		Free	Free		Stop	
Grade		0%	0%		0%	
Peak Hour Factor	0.96	0.96	0.96	0.96	0.96	0.96
Hourly flow rate (vph)	240	673	830	10	25	238
Pedestrians						
Lane Width (ft)						
Walking Speed (ft/s)						
Percent Blockage						
Right turn flare (veh)						
Median type		None	None			
Median storage veh)						
Upstream signal (ft)		611				
pX, platoon unblocked					0.76	
vC, conflicting volume	841				1988	835
vC1, stage 1 conf vol						
vC2, stage 2 conf vol						
vCu, unblocked vol	841				2138	835
tC, single (s)	4.1				6.4	6.2
tC, 2 stage (s)						
tF (s)	2.2				3.5	3.3
p0 queue free %	70				13	35
cM capacity (veh/h)	795				29	367

Direction, Lane #	EB 1	EB 2	WB 1	SB 1
Volume Total	240	673	841	262
Volume Left	240	0	0	25
Volume Right	0	0	10	238
cSH	795	1700	1700	173
Volume to Capacity	0.30	0.40	0.49	1.52
Queue Length 95th (ft)	32	0	0	424
Control Delay (s)	11.5	0.0	0.0	308.1
Lane LOS	B			F
Approach Delay (s)	3.0		0.0	308.1
Approach LOS				F

Intersection Summary			
Average Delay	41.5		
Intersection Capacity Utilization	80.7%	ICU Level of Service	D
Analysis Period (min)	15		

Lane Group	EBL	EBT	WBL	WBT	NBL	NBT	SBL	SBT
Lane Group Flow (vph)	224	550	244	502	88	1821	232	2451
v/c Ratio	0.74	0.92	0.90	0.90	0.75	0.83	0.90	0.94
Control Delay	89.1	95.4	110.1	95.0	73.7	49.4	91.2	49.7
Queue Delay	0.0	0.0	0.0	0.0	0.0	0.0	0.0	0.0
Total Delay	89.1	95.4	110.1	95.0	73.7	49.4	91.2	49.7
Queue Length 50th (ft)	269	356	331	340	57	738	234	1044
Queue Length 95th (ft)	376	#461	#512	#434	#162	801	#389	1108
Internal Link Dist (ft)		364		1915		469		768
Turn Bay Length (ft)			286		160		130	
Base Capacity (vph)	316	627	288	597	118	2196	280	2663
Starvation Cap Reductn	0	0	0	0	0	0	0	0
Spillback Cap Reductn	0	0	0	0	0	0	0	0
Storage Cap Reductn	0	0	0	0	0	0	0	0
Reduced v/c Ratio	0.71	0.88	0.85	0.84	0.75	0.83	0.83	0.92

Intersection Summary

95th percentile volume exceeds capacity, queue may be longer.
Queue shown is maximum after two cycles.

Movement	EBL	EBT	EBR	WBL	WBT	WBR	NBL	NBT	NBR	SBL	SBT	SBR
Lane Configurations												
Volume (vph)	206	450	56	340	334	12	81	1334	341	213	1999	256
Ideal Flow (vphpl)	1900	1900	1900	1900	1900	1900	1900	1900	1900	1900	1900	1900
Total Lost time (s)	5.0	5.0		5.0	5.0		3.0	5.0		3.0	5.0	
Lane Util. Factor	1.00	0.95		0.91	0.91		1.00	0.91		1.00	0.91	
Frt	1.00	0.98		1.00	1.00		1.00	0.97		1.00	0.98	
Flt Protected	0.95	1.00		0.95	0.99		0.95	1.00		0.95	1.00	
Satd. Flow (prot)	1770	3480		1610	3335		1770	4930		1770	4999	
Flt Permitted	0.95	1.00		0.95	0.99		0.05	1.00		0.05	1.00	
Satd. Flow (perm)	1770	3480		1610	3335		91	4930		88	4999	
Peak-hour factor, PHF	0.92	0.92	0.92	0.92	0.92	0.92	0.92	0.92	0.92	0.92	0.92	0.92
Adj. Flow (vph)	224	489	61	370	363	13	88	1450	371	232	2173	278
RTOR Reduction (vph)	0	5	0	0	1	0	0	23	0	0	9	0
Lane Group Flow (vph)	224	545	0	244	501	0	88	1798	0	232	2442	0
Turn Type	Split	NA		Split	NA		pm+pt	NA		pm+pt	NA	
Protected Phases	4	4		8	8		5	2		1	6	
Permitted Phases							2			6		
Actuated Green, G (s)	31.7	31.7		31.0	31.0		89.7	81.7		107.4	96.4	
Effective Green, g (s)	31.7	31.7		31.0	31.0		89.7	81.7		107.4	96.4	
Actuated g/C Ratio	0.17	0.17		0.17	0.17		0.48	0.44		0.58	0.52	
Clearance Time (s)	5.0	5.0		5.0	5.0		3.0	5.0		3.0	5.0	
Vehicle Extension (s)	3.0	3.0		3.0	3.0		3.0	3.0		3.0	3.0	
Lane Grp Cap (vph)	303	596		270	559		117	2176		257	2603	
v/s Ratio Prot	0.13	c0.16		c0.15	0.15		0.03	0.36		c0.11	c0.49	
v/s Ratio Perm							0.33			0.41		
v/c Ratio	0.74	0.91		0.90	0.90		0.75	0.83		0.90	0.94	
Uniform Delay, d1	72.8	75.4		75.6	75.5		40.9	45.5		62.4	41.6	
Progression Factor	1.00	1.00		1.00	1.00		1.00	1.00		1.00	1.00	
Incremental Delay, d2	9.1	18.6		30.7	16.9		23.5	3.8		31.7	7.4	
Delay (s)	81.9	94.0		106.3	92.4		64.4	49.2		94.1	48.9	
Level of Service	F	F		F	F		E	D		F	D	
Approach Delay (s)		90.5			96.9			49.9			52.8	
Approach LOS		F			F			D			D	

Intersection Summary			
HCM Average Control Delay	62.1	HCM Level of Service	E
HCM Volume to Capacity ratio	0.91		
Actuated Cycle Length (s)	185.1	Sum of lost time (s)	13.0
Intersection Capacity Utilization	91.9%	ICU Level of Service	F
Analysis Period (min)	15		
c Critical Lane Group			

Movement	EBL	EBT	EBR	WBL	WBT	WBR	NBL	NBT	NBR	SBL	SBT	SBR
Lane Configurations												
Volume (vph)	206	450	56	340	334	12	81	1334	341	213	1999	256
Movement Number	7	4	14	3	8	18	5	2	12	1	6	16
Initial Queue, veh	0	0	0	0	0	0	0	0	0	0	0	0
Ped-Bike Adj. Factor (A_pbT)	1.00		1.00	1.00		1.00	1.00		1.00	1.00		1.00
Parking, Bus Adj. Factors	1.00	1.00	1.00	1.00	1.00	1.00	1.00	1.00	1.00	1.00	1.00	1.00
Adj. Sat. Flow Rate, veh/h/ln	1863	1863	1863	1863	1863	1863	1863	1863	1863	1863	1863	1863
Lanes	1	2	0	1	2	0	1	3	0	1	3	0
Lane Assignment												
Capacity, veh/h	294	538	67	320	644	23	114	1852	471	252	2375	298
Proportion Arriving On Green	0.17	0.17	0.17	0.18	0.18	0.18	0.04	0.46	0.46	0.10	0.52	0.52
Movement Delay, s/veh	82.5	100.8	102.8	174.5	70.6	70.7	65.9	45.9	50.0	79.9	47.2	56.4
Movement LOS	F	F	F	F	E	E	E	D	D	E	D	E
Approach Volume, veh/h		774			746			1909			2683	
Approach Delay, s/veh		96.2			122.1			48.1			52.9	
Approach LOS		F			F			D			D	

Timer:	1	2	3	4	5	6	7	8
Assigned Phase	1	2	8	4	5	6		
Case No	1.1	4.0	10.0	10.0	1.1	4.0		
Phase Duration (G+Y+Rc), s	20.92	88.86	38.00	35.30	9.77	100.01		
Change Period (Y+Rc), s	3.00	5.00	5.00	5.00	3.00	5.00		
Max. Allowable Headway (MAH), s	4.00	3.96	3.96	3.96	4.00	3.96		
Maximum Green Setting (Gmax), s	25.00	81.00	33.00	33.00	8.00	98.00		
Max. Queue Clearance Time (g_c+I1), s	17.49	57.92	35.00	29.19	6.83	84.55		
Green Extension Time (g_e), s	0.43	20.45	0.00	1.12	0.02	10.46		
Probability of Phase Call (p_c)	1.000	1.000	1.000	1.000	0.989	1.000		
Probability of Max Out (p_x)	0.094	0.883	1.000	1.000	1.000	0.940		

Left-Turn Movement Data					
Assigned Movement	1		3	7	5
Mvmt. Sat Flow, veh/h	1774.04		1774.04	1774.04	1774.04

Through Movement Data					
Assigned Movement		2	8	4	6
Mvmt. Sat Flow, veh/h		4043.13	3574.75	3251.43	4576.31

Right-Turn Movement Data					
Assigned Movement		12	18	14	16
Mvmt. Sat Flow, veh/h		1028.34	128.13	402.95	575.14

Left Lane Group Data								
Assigned Movement	1	0	3	7	5	0	0	0
Lane Assignment	L (Pr/Pm)		L		LL (Pr/Pm)			
Lanes in Group	1	0	1	1	1	0	0	0
Group Volume (v), veh/h	231.5	0.0	369.6	223.9	88.0	0.0	0.0	0.0
Group Sat. Flow (s), veh/h/ln	1774.0	0.0	1774.0	1774.0	1774.0	0.0	0.0	0.0
Queue Serve Time (g_s), s	15.5	0.0	33.0	22.1	4.8	0.0	0.0	0.0
Cycle Queue Clear Time (g_c), s	15.5	0.0	33.0	22.1	4.8	0.0	0.0	0.0

Perm LT Sat Flow Rate (s_l), veh/h/ln	255.5	0.0	1774.0	1774.0	137.3	0.0	0.0	0.0
Shared LT Sat Flow (s_sh), veh/h/ln	0.0	0.0	0.0	0.0	0.0	0.0	0.0	0.0
Perm LT Eff. Green (g_p), s	97.0	0.0	0.0	0.0	83.9	0.0	0.0	0.0
Perm LT Serve Time (g_u), s	27.9	0.0	0.0	0.0	12.5	0.0	0.0	0.0
Perm LT Que Serve Time (g_ps), s	27.9	0.0	0.0	0.0	12.5	0.0	0.0	0.0
Time to First Blk (g_f), s	0.0	0.0	0.0	0.0	0.0	0.0	0.0	0.0
Serve Time pre Blk (g_fs), s	0.0	0.0	0.0	0.0	0.0	0.0	0.0	0.0
Proportion LT Inside Lane (P_L)	1.000	0.000	1.000	1.000	1.000	0.000	0.000	0.000
Lane Group Capacity (c), veh/h	252.0	0.0	319.8	293.6	114.3	0.0	0.0	0.0
Volume-to-Capacity Ratio (X)	0.919	0.000	1.156	0.763	0.770	0.000	0.000	0.000
Available Capacity (c_a), veh/h	320.6	0.0	319.8	319.8	126.2	0.0	0.0	0.0
Upstream Filter Factor (I)	1.000	0.000	1.000	1.000	1.000	0.000	0.000	0.000
Uniform Delay (d1), s/veh	53.5	0.0	75.0	73.0	43.1	0.0	0.0	0.0
Incremental Delay (d2), s/veh	26.5	0.0	99.5	9.6	22.8	0.0	0.0	0.0
Initial Queue Delay (d3), s/veh	0.0	0.0	0.0	0.0	0.0	0.0	0.0	0.0
Control Delay (d), s/veh	79.9	0.0	174.5	82.5	65.9	0.0	0.0	0.0
First-Term Queue (Q1), veh/ln	6.9	0.0	15.1	10.1	2.1	0.0	0.0	0.0
Second-Term Queue (Q2), veh/ln	1.9	0.0	8.8	0.8	0.7	0.0	0.0	0.0
Third-Term Queue (Q3), veh/ln	0.0	0.0	0.0	0.0	0.0	0.0	0.0	0.0
Percentile bk-of-que factor (f_B%)	1.000	0.000	1.000	1.000	1.000	0.000	0.000	0.000
Percentile Back of Queue (Q%), veh/ln	8.7	0.0	24.0	10.9	2.8	0.0	0.0	0.0
Percentile Storage Ratio (RQ%)	1.70	0.00	2.13	0.80	0.45	0.00	0.00	0.00
Initial Queue (Qb), veh	0.0	0.0	0.0	0.0	0.0	0.0	0.0	0.0
Final (Residual) Queue (Qe), veh	0.0	0.0	12.4	0.0	0.0	0.0	0.0	0.0
Saturated Delay (ds), s/veh	0.0	0.0	0.0	0.0	0.0	0.0	0.0	0.0
Saturated Queue (Qs), veh	0.0	0.0	0.0	0.0	0.0	0.0	0.0	0.0
Saturated Capacity (cs), veh/h	0.0	0.0	0.0	0.0	0.0	0.0	0.0	0.0
Initial Queue Clear Time (tc), h	0.0	0.0	0.3	0.0	0.0	0.0	0.0	0.0
Middle Lane Group Data								
Assigned Movement	0	2	8	4	0	6	0	0
Lane Assignment		T	T	T		T		
Lanes in Group	0	2	1	1	0	2	0	0
Group Volume (v), veh/h	0.0	1214.7	188.8	279.4	0.0	1599.0	0.0	0.0
Group Sat. Flow (s), veh/h/ln	0.0	1695.1	1862.7	1862.7	0.0	1695.1	0.0	0.0
Queue Serve Time (g_s), s	0.0	55.4	16.9	27.0	0.0	78.6	0.0	0.0
Cycle Queue Clear Time (g_c), s	0.0	55.4	16.9	27.0	0.0	78.6	0.0	0.0
Lane Group Capacity (c), veh/h	0.0	1552.8	335.8	308.3	0.0	1759.3	0.0	0.0
Volume-to-Capacity Ratio (X)	0.000	0.782	0.562	0.906	0.000	0.909	0.000	0.000
Available Capacity (c_a), veh/h	0.0	1552.8	335.8	335.8	0.0	1814.7	0.0	0.0
Upstream Filter Factor (I)	0.000	1.000	1.000	1.000	0.000	1.000	0.000	0.000
Uniform Delay (d1), s/veh	0.0	41.9	68.5	75.0	0.0	40.1	0.0	0.0
Incremental Delay (d2), s/veh	0.0	4.0	2.1	25.8	0.0	7.1	0.0	0.0
Initial Queue Delay (d3), s/veh	0.0	0.0	0.0	0.0	0.0	0.0	0.0	0.0
Control Delay (d), s/veh	0.0	45.9	70.6	100.8	0.0	47.2	0.0	0.0
First-Term Queue (Q1), veh/ln	0.0	23.4	8.2	13.0	0.0	32.7	0.0	0.0
Second-Term Queue (Q2), veh/ln	0.0	0.9	0.2	2.2	0.0	1.7	0.0	0.0
Third-Term Queue (Q3), veh/ln	0.0	0.0	0.0	0.0	0.0	0.0	0.0	0.0
Percentile bk-of-que factor (f_B%)	0.000	1.000	1.000	1.000	0.000	1.000	0.000	0.000
Percentile Back of Queue (Q%), veh/ln	0.0	24.2	8.4	15.2	0.0	34.4	0.0	0.0
Percentile Storage Ratio (RQ%)	0.00	1.35	0.11	1.12	0.00	1.19	0.00	0.00

Initial Queue (Qb), veh	0.0	0.0	0.0	0.0	0.0	0.0	0.0	0.0
Final (Residual) Queue (Qe), veh	0.0	0.0	0.0	0.0	0.0	0.0	0.0	0.0
Saturated Delay (ds), s/veh	0.0	0.0	0.0	0.0	0.0	0.0	0.0	0.0
Saturated Queue (Qs), veh	0.0	0.0	0.0	0.0	0.0	0.0	0.0	0.0
Saturated Capacity (cs), veh/h	0.0	0.0	0.0	0.0	0.0	0.0	0.0	0.0
Initial Queue Clear Time (tc), h	0.0	0.0	0.0	0.0	0.0	0.0	0.0	0.0
Right Lane Group Data								
Assigned Movement	0	12	18	14	0	16	0	0
Lane Assignment		T+R	T+R	T+R		T+R		
Lanes in Group	0	1	1	1	0	1	0	0
Group Volume (v), veh/h	0.0	606.0	187.3	270.6	0.0	852.1	0.0	0.0
Group Sat. Flow (s), veh/h/ln	0.0	1681.3	1840.1	1791.6	0.0	1761.2	0.0	0.0
Queue Serve Time (g_s), s	0.0	55.9	17.0	27.2	0.0	82.5	0.0	0.0
Cycle Queue Clear Time (g_c), s	0.0	55.9	17.0	27.2	0.0	82.5	0.0	0.0
Prot RT Sat Flow Rate (s_R), veh/h/ln	0.0	0.0	0.0	0.0	0.0	0.0	0.0	0.0
Prot RT Eff. Green (g_R), s	0.0	0.0	0.0	0.0	0.0	0.0	0.0	0.0
Proportion RT Outside Lane (P_R)	0.000	0.612	0.070	0.225	0.000	0.327	0.000	0.000
Lane Group Capacity (c), veh/h	0.0	770.1	331.7	296.5	0.0	914.0	0.0	0.0
Volume-to-Capacity Ratio (X)	0.000	0.787	0.565	0.913	0.000	0.932	0.000	0.000
Available Capacity (c_a), veh/h	0.0	770.1	331.7	322.9	0.0	942.8	0.0	0.0
Upstream Filter Factor (I)	0.000	1.000	1.000	1.000	0.000	1.000	0.000	0.000
Uniform Delay (d1), s/veh	0.0	42.0	68.5	75.1	0.0	41.0	0.0	0.0
Incremental Delay (d2), s/veh	0.0	8.0	2.2	27.7	0.0	15.3	0.0	0.0
Initial Queue Delay (d3), s/veh	0.0	0.0	0.0	0.0	0.0	0.0	0.0	0.0
Control Delay (d), s/veh	0.0	50.0	70.7	102.8	0.0	56.4	0.0	0.0
First-Term Queue (Q1), veh/ln	0.0	23.4	8.1	12.6	0.0	35.6	0.0	0.0
Second-Term Queue (Q2), veh/ln	0.0	1.7	0.2	2.3	0.0	3.9	0.0	0.0
Third-Term Queue (Q3), veh/ln	0.0	0.0	0.0	0.0	0.0	0.0	0.0	0.0
Percentile bk-of-que factor (f_B%)	0.000	1.000	1.000	1.000	0.000	1.000	0.000	0.000
Percentile Back of Queue (Q%), veh/ln	0.0	25.1	8.3	14.9	0.0	39.5	0.0	0.0
Percentile Storage Ratio (RQ%)	0.00	1.39	0.11	1.10	0.00	1.37	0.00	0.00
Initial Queue (Qb), veh	0.0	0.0	0.0	0.0	0.0	0.0	0.0	0.0
Final (Residual) Queue (Qe), veh	0.0	0.0	0.0	0.0	0.0	0.0	0.0	0.0
Saturated Delay (ds), s/veh	0.0	0.0	0.0	0.0	0.0	0.0	0.0	0.0
Saturated Queue (Qs), veh	0.0	0.0	0.0	0.0	0.0	0.0	0.0	0.0
Saturated Capacity (cs), veh/h	0.0	0.0	0.0	0.0	0.0	0.0	0.0	0.0
Initial Queue Clear Time (tc), h	0.0	0.0	0.0	0.0	0.0	0.0	0.0	0.0
Intersection Summary								
HCM Average Control Delay		65.4						
HCM Level of Service		E						

Movement	EBL	EBT	EBR	WBL	WBT	WBR	NEL	NET	NER	SWL	SWT	SWR
Lane Configurations												
Volume (veh/h)	30	23	0	0	9	16	40	1875	20	0	0	0
Sign Control		Stop			Stop			Free			Free	
Grade		0%			0%			0%			0%	
Peak Hour Factor	0.93	0.93	0.93	0.93	0.93	0.93	0.93	0.93	0.93	0.93	0.93	0.93
Hourly flow rate (vph)	32	25	0	0	10	17	43	2016	22	0	0	0
Pedestrians												
Lane Width (ft)												
Walking Speed (ft/s)												
Percent Blockage												
Right turn flare (veh)												
Median type								None			None	
Median storage veh)												
Upstream signal (ft)												
pX, platoon unblocked												
vC, conflicting volume	780	2124	0	2125	2113	683	0			2038		
vC1, stage 1 conf vol												
vC2, stage 2 conf vol												
vCu, unblocked vol	780	2124	0	2125	2113	683	0			2038		
tC, single (s)	7.5	6.5	6.9	7.5	6.5	6.9	4.1			4.1		
tC, 2 stage (s)												
tF (s)	3.5	4.0	3.3	3.5	4.0	3.3	2.2			2.2		
p0 queue free %	86	49	100	100	80	96	97			100		
cM capacity (veh/h)	227	48	1084	17	49	392	1622			273		

Direction, Lane #	EB 1	WB 1	NE 1	NE 2	NE 3
Volume Total	57	27	547	1008	526
Volume Left	32	0	43	0	0
Volume Right	0	17	0	0	22
cSH	87	111	1622	1700	1700
Volume to Capacity	0.66	0.24	0.03	0.59	0.31
Queue Length 95th (ft)	78	22	2	0	0
Control Delay (s)	104.0	47.4	0.8	0.0	0.0
Lane LOS	F	E	A		
Approach Delay (s)	104.0	47.4	0.2		
Approach LOS	F	E			

Intersection Summary			
Average Delay	3.5		
Intersection Capacity Utilization	53.7%	ICU Level of Service	A
Analysis Period (min)	15		

Movement	EBL	EBT	EBR	WBL	WBT	WBR	NEL	NET	NER	SWL	SWT	SWR
Lane Configurations												
Volume (veh/h)	0	27	0	0	3	0	1	2001	8	0	0	0
Sign Control		Stop			Stop			Free			Free	
Grade		0%			0%			0%			0%	
Peak Hour Factor	0.91	0.91	0.91	0.91	0.91	0.91	0.91	0.91	0.91	0.91	0.91	0.91
Hourly flow rate (vph)	0	30	0	0	3	0	1	2199	9	0	0	0
Pedestrians												
Lane Width (ft)												
Walking Speed (ft/s)												
Percent Blockage												
Right turn flare (veh)												
Median type								None			None	
Median storage veh)												
Upstream signal (ft)												
pX, platoon unblocked												
vC, conflicting volume	737	2210	0	2220	2205	737	0			2208		
vC1, stage 1 conf vol												
vC2, stage 2 conf vol												
vCu, unblocked vol	737	2210	0	2220	2205	737	0			2208		
tC, single (s)	7.5	6.5	6.9	7.5	6.5	6.9	4.1			4.1		
tC, 2 stage (s)												
tF (s)	3.5	4.0	3.3	3.5	4.0	3.3	2.2			2.2		
p0 queue free %	100	32	100	100	92	100	100			100		
cM capacity (veh/h)	289	44	1084	11	44	361	1622			234		

Direction, Lane #	EB 1	WB 1	NE 1	NE 2	NE 3
Volume Total	30	3	551	1099	559
Volume Left	0	0	1	0	0
Volume Right	0	0	0	0	9
cSH	44	44	1622	1700	1700
Volume to Capacity	0.68	0.08	0.00	0.65	0.33
Queue Length 95th (ft)	64	6	0	0	0
Control Delay (s)	190.5	93.7	0.0	0.0	0.0
Lane LOS	F	F	A		
Approach Delay (s)	190.5	93.7	0.0		
Approach LOS	F	F			

Intersection Summary			
Average Delay	2.7		
Intersection Capacity Utilization	48.9%	ICU Level of Service	A
Analysis Period (min)	15		

Movement	EBL	EBR	NBL	NBT	SBT	SBR
Lane Configurations						
Volume (veh/h)	1	1	1	187	218	2
Sign Control	Stop			Free	Free	
Grade	0%			0%	0%	
Peak Hour Factor	0.92	0.92	0.92	0.92	0.92	0.92
Hourly flow rate (vph)	1	1	1	203	237	2
Pedestrians						
Lane Width (ft)						
Walking Speed (ft/s)						
Percent Blockage						
Right turn flare (veh)						
Median type				None	None	
Median storage veh)						
Upstream signal (ft)						
pX, platoon unblocked						
vC, conflicting volume	443	238	239			
vC1, stage 1 conf vol						
vC2, stage 2 conf vol						
vCu, unblocked vol	443	238	239			
tC, single (s)	6.4	6.2	4.1			
tC, 2 stage (s)						
tF (s)	3.5	3.3	2.2			
p0 queue free %	100	100	100			
cM capacity (veh/h)	571	801	1328			

Direction, Lane #	EB 1	NB 1	SB 1
Volume Total	2	204	239
Volume Left	1	1	0
Volume Right	1	0	2
cSH	667	1328	1700
Volume to Capacity	0.00	0.00	0.14
Queue Length 95th (ft)	0	0	0
Control Delay (s)	10.4	0.0	0.0
Lane LOS	B	A	
Approach Delay (s)	10.4	0.0	0.0
Approach LOS	B		

Intersection Summary			
Average Delay	0.1		
Intersection Capacity Utilization	21.6%	ICU Level of Service	A
Analysis Period (min)	15		

Movement	EBL	EBR	NBL	NBT	SBT	SBR
Lane Configurations						
Volume (veh/h)	0	0	0	192	222	1
Sign Control	Stop			Free	Free	
Grade	0%			0%	0%	
Peak Hour Factor	0.92	0.92	0.92	0.92	0.92	0.92
Hourly flow rate (vph)	0	0	0	209	241	1
Pedestrians						
Lane Width (ft)						
Walking Speed (ft/s)						
Percent Blockage						
Right turn flare (veh)						
Median type				None	None	
Median storage veh)						
Upstream signal (ft)						
pX, platoon unblocked						
vC, conflicting volume	451	242	242			
vC1, stage 1 conf vol						
vC2, stage 2 conf vol						
vCu, unblocked vol	451	242	242			
tC, single (s)	6.4	6.2	4.1			
tC, 2 stage (s)						
tF (s)	3.5	3.3	2.2			
p0 queue free %	100	100	100			
cM capacity (veh/h)	566	797	1324			

Direction, Lane #	EB 1	NB 1	SB 1
Volume Total	0	209	242
Volume Left	0	0	0
Volume Right	0	0	1
cSH	1700	1324	1700
Volume to Capacity	0.00	0.00	0.14
Queue Length 95th (ft)	0	0	0
Control Delay (s)	0.0	0.0	0.0
Lane LOS	A		
Approach Delay (s)	0.0	0.0	0.0
Approach LOS	A		

Intersection Summary			
Average Delay	0.0		
Intersection Capacity Utilization	15.1%	ICU Level of Service	A
Analysis Period (min)	15		

Movement	EBL	EBR	NBL	NBT	SBT	SBR
Lane Configurations						
Volume (veh/h)	7	4	1	183	197	2
Sign Control	Stop			Free	Free	
Grade	0%			0%	0%	
Peak Hour Factor	0.92	0.92	0.92	0.92	0.92	0.92
Hourly flow rate (vph)	8	4	1	199	214	2
Pedestrians						
Lane Width (ft)						
Walking Speed (ft/s)						
Percent Blockage						
Right turn flare (veh)						
Median type				None	None	
Median storage veh)						
Upstream signal (ft)						
pX, platoon unblocked						
vC, conflicting volume	416	215	216			
vC1, stage 1 conf vol						
vC2, stage 2 conf vol						
vCu, unblocked vol	416	215	216			
tC, single (s)	6.4	6.2	4.1			
tC, 2 stage (s)						
tF (s)	3.5	3.3	2.2			
p0 queue free %	99	99	100			
cM capacity (veh/h)	592	825	1353			

Direction, Lane #	EB 1	NB 1	SB 1
Volume Total	12	200	216
Volume Left	8	1	0
Volume Right	4	0	2
cSH	660	1353	1700
Volume to Capacity	0.02	0.00	0.13
Queue Length 95th (ft)	1	0	0
Control Delay (s)	10.6	0.0	0.0
Lane LOS	B	A	
Approach Delay (s)	10.6	0.0	0.0
Approach LOS	B		

Intersection Summary			
Average Delay	0.3		
Intersection Capacity Utilization	20.5%	ICU Level of Service	A
Analysis Period (min)	15		

Movement	EBL	EBR	NBL	NBT	SBT	SBR
Lane Configurations						
Volume (veh/h)	26	27	20	145	133	15
Sign Control	Stop			Free	Free	
Grade	0%			0%	0%	
Peak Hour Factor	0.92	0.92	0.92	0.92	0.92	0.92
Hourly flow rate (vph)	28	29	22	158	145	16
Pedestrians						
Lane Width (ft)						
Walking Speed (ft/s)						
Percent Blockage						
Right turn flare (veh)						
Median type				None	None	
Median storage veh)						
Upstream signal (ft)						
pX, platoon unblocked						
vC, conflicting volume	354	153	161			
vC1, stage 1 conf vol						
vC2, stage 2 conf vol						
vCu, unblocked vol	354	153	161			
tC, single (s)	6.4	6.2	4.1			
tC, 2 stage (s)						
tF (s)	3.5	3.3	2.2			
p0 queue free %	96	97	98			
cM capacity (veh/h)	634	893	1418			

Direction, Lane #	EB 1	NB 1	SB 1
Volume Total	58	179	161
Volume Left	28	22	0
Volume Right	29	0	16
cSH	744	1418	1700
Volume to Capacity	0.08	0.02	0.09
Queue Length 95th (ft)	6	1	0
Control Delay (s)	10.2	1.0	0.0
Lane LOS	B	A	
Approach Delay (s)	10.2	1.0	0.0
Approach LOS	B		

Intersection Summary			
Average Delay	1.9		
Intersection Capacity Utilization	30.0%	ICU Level of Service	A
Analysis Period (min)	15		

Movement	EBL	EBT	EBR	WBL	WBT	WBR	NBL	NBT	NBR	SBL	SBT	SBR
Lane Configurations												
Sign Control		Stop			Stop			Stop			Stop	
Volume (vph)	3	109	41	34	149	1	31	150	14	2	1	4
Peak Hour Factor	0.92	0.92	0.92	0.92	0.92	0.92	0.92	0.92	0.92	0.92	0.92	0.92
Hourly flow rate (vph)	3	118	45	37	162	1	34	163	15	2	1	4

Direction, Lane #	EB 1	WB 1	NB 1	SB 1
Volume Total (vph)	166	200	212	8
Volume Left (vph)	3	37	34	2
Volume Right (vph)	45	1	15	4
Hadj (s)	-0.12	0.07	0.02	-0.25
Departure Headway (s)	4.6	4.7	4.8	4.8
Degree Utilization, x	0.21	0.26	0.28	0.01
Capacity (veh/h)	744	720	704	663
Control Delay (s)	8.8	9.4	9.7	7.9
Approach Delay (s)	8.8	9.4	9.7	7.9
Approach LOS	A	A	A	A

Intersection Summary			
Delay	9.3		
HCM Level of Service	A		
Intersection Capacity Utilization	40.2%	ICU Level of Service	A
Analysis Period (min)	15		

HCM Unsignalized Intersection Capacity Analysis
1: SW 97th Ave. & SW 174th St.

2/11/2015

Movement	EBL	EBT	EBR	WBL	WBT	WBR	NBL	NBT	NBR	SBL	SBT	SBR
Lane Configurations												
Sign Control		Stop			Stop			Stop			Stop	
Volume (vph)	4	143	28	29	106	0	22	15	12	1	0	1
Peak Hour Factor	0.84	0.84	0.84	0.84	0.84	0.84	0.84	0.84	0.84	0.84	0.84	0.84
Hourly flow rate (vph)	5	170	33	35	126	0	26	18	14	1	0	1

Direction, Lane #	EB 1	WB 1	NB 1	SB 1
Volume Total (vph)	208	161	58	2
Volume Left (vph)	5	35	26	1
Volume Right (vph)	33	0	14	1
Hadj (s)	-0.06	0.08	-0.02	-0.17
Departure Headway (s)	4.2	4.3	4.7	4.6
Degree Utilization, x	0.24	0.19	0.08	0.00
Capacity (veh/h)	846	802	710	705
Control Delay (s)	8.5	8.4	8.1	7.6
Approach Delay (s)	8.5	8.4	8.1	7.6
Approach LOS	A	A	A	A

Intersection Summary			
Delay	8.4		
HCM Level of Service	A		
Intersection Capacity Utilization	30.0%	ICU Level of Service	A
Analysis Period (min)	15		

Lane Group	EBL	NBT	SBT	NET
Lane Group Flow (vph)	94	298	12	4321
v/c Ratio	1.24	1.26	0.09	1.13
Control Delay	240.4	189.7	69.7	84.2
Queue Delay	0.0	0.0	0.0	0.0
Total Delay	240.4	189.7	69.7	84.2
Queue Length 50th (ft)	~129	~349	12	~2032
Queue Length 95th (ft)	#235	#494	33	#1802
Internal Link Dist (ft)	257	1041	665	1300
Turn Bay Length (ft)				
Base Capacity (vph)	76	237	135	3829
Starvation Cap Reductn	0	0	0	0
Spillback Cap Reductn	0	0	0	0
Storage Cap Reductn	0	0	0	0
Reduced v/c Ratio	1.24	1.26	0.09	1.13

Intersection Summary

~ Volume exceeds capacity, queue is theoretically infinite.
Queue shown is maximum after two cycles.

95th percentile volume exceeds capacity, queue may be longer.
Queue shown is maximum after two cycles.

Movement	EBL	EBR	NBL	NBT	NBR	SBL	SBT	NEL2	NEL	NET	NER
Lane Configurations											
Volume (vph)	1	78	4	12	234	4	6	1	2	3620	7
Ideal Flow (vphpl)	1900	1900	1900	1900	1900	1900	1900	1900	1900	1900	1900
Total Lost time (s)	5.0			5.0			5.0			5.0	
Lane Util. Factor	1.00			1.00			1.00			0.91	
Frt	0.87			0.87			1.00			1.00	
Flt Protected	1.00			1.00			0.98			1.00	
Satd. Flow (prot)	1613			1626			1825			5084	
Flt Permitted	1.00			1.00			0.65			1.00	
Satd. Flow (perm)	1613			1621			1209			5084	
Peak-hour factor, PHF	0.84	0.84	0.84	0.84	0.84	0.84	0.84	0.84	0.84	0.84	0.84
Adj. Flow (vph)	1	93	5	14	279	5	7	1	2	4310	8
RTOR Reduction (vph)	0	0	0	56	0	0	0	0	0	0	0
Lane Group Flow (vph)	94	0	0	242	0	0	12	0	0	4321	0
Turn Type	NA		Perm	NA		Perm	NA	Perm	Perm	NA	
Protected Phases	3			4			8			6	
Permitted Phases			4			8		6	6		
Actuated Green, G (s)	8.0			19.0			19.0			128.0	
Effective Green, g (s)	8.0			19.0			19.0			128.0	
Actuated g/C Ratio	0.05			0.11			0.11			0.75	
Clearance Time (s)	5.0			5.0			5.0			5.0	
Vehicle Extension (s)	3.0			3.0			3.0			3.0	
Lane Grp Cap (vph)	76			181			135			3828	
v/s Ratio Prot	c0.06										
v/s Ratio Perm				c0.15			0.01			0.85	
v/c Ratio	1.24			1.34			0.09			1.13	
Uniform Delay, d1	81.0			75.5			67.7			21.0	
Progression Factor	1.00			1.00			1.00			1.00	
Incremental Delay, d2	179.9			184.2			1.3			61.8	
Delay (s)	260.9			259.7			69.0			82.8	
Level of Service	F			F			E			F	
Approach Delay (s)	260.9			259.7			69.0			82.8	
Approach LOS	F			F			E			F	

Intersection Summary			
HCM Average Control Delay	97.5	HCM Level of Service	F
HCM Volume to Capacity ratio	1.16		
Actuated Cycle Length (s)	170.0	Sum of lost time (s)	15.0
Intersection Capacity Utilization	103.9%	ICU Level of Service	G
Analysis Period (min)	15		
c Critical Lane Group			

Movement	EBL	EBR	NBL	NBT	SBT	SBR
Lane Configurations						
Volume (veh/h)	9	35	37	262	46	0
Sign Control	Stop			Free	Free	
Grade	0%			0%	0%	
Peak Hour Factor	0.90	0.90	0.90	0.90	0.90	0.90
Hourly flow rate (vph)	10	39	41	291	51	0
Pedestrians						
Lane Width (ft)						
Walking Speed (ft/s)						
Percent Blockage						
Right turn flare (veh)						
Median type				None	None	
Median storage veh)						
Upstream signal (ft)					1121	
pX, platoon unblocked						
vC, conflicting volume	424	51	51			
vC1, stage 1 conf vol						
vC2, stage 2 conf vol						
vCu, unblocked vol	424	51	51			
tC, single (s)	6.4	6.2	4.1			
tC, 2 stage (s)						
tF (s)	3.5	3.3	2.2			
p0 queue free %	98	96	97			
cM capacity (veh/h)	571	1017	1555			

Direction, Lane #	EB 1	NB 1	SB 1
Volume Total	49	332	51
Volume Left	10	41	0
Volume Right	39	0	0
cSH	877	1555	1700
Volume to Capacity	0.06	0.03	0.03
Queue Length 95th (ft)	4	2	0
Control Delay (s)	9.3	1.1	0.0
Lane LOS	A	A	
Approach Delay (s)	9.3	1.1	0.0
Approach LOS	A		

Intersection Summary			
Average Delay	1.9		
Intersection Capacity Utilization	32.5%	ICU Level of Service	A
Analysis Period (min)	15		

Movement	WBL	WBR	NBT	NBR	SBL	SBT
Lane Configurations						
Volume (veh/h)	21	26	274	15	6	52
Sign Control	Stop		Free			Free
Grade	0%		0%			0%
Peak Hour Factor	0.89	0.89	0.89	0.89	0.89	0.89
Hourly flow rate (vph)	24	29	308	17	7	58
Pedestrians						
Lane Width (ft)						
Walking Speed (ft/s)						
Percent Blockage						
Right turn flare (veh)						
Median type			None			None
Median storage veh)						
Upstream signal (ft)						
pX, platoon unblocked						
vC, conflicting volume	388	316			325	
vC1, stage 1 conf vol						
vC2, stage 2 conf vol						
vCu, unblocked vol	388	316			325	
tC, single (s)	6.4	6.2			4.1	
tC, 2 stage (s)						
tF (s)	3.5	3.3			2.2	
p0 queue free %	96	96			99	
cM capacity (veh/h)	612	724			1235	

Direction, Lane #	WB 1	NB 1	SB 1
Volume Total	53	325	65
Volume Left	24	0	7
Volume Right	29	17	0
cSH	669	1700	1235
Volume to Capacity	0.08	0.19	0.01
Queue Length 95th (ft)	6	0	0
Control Delay (s)	10.8	0.0	0.9
Lane LOS	B		A
Approach Delay (s)	10.8	0.0	0.9
Approach LOS	B		

Intersection Summary			
Average Delay	1.4		
Intersection Capacity Utilization	25.3%	ICU Level of Service	A
Analysis Period (min)	15		

Movement	EBL	EBR	NBL	NBT	SBT	SBR
Lane Configurations						
Volume (veh/h)	6	25	18	308	72	0
Sign Control	Stop			Free	Free	
Grade	0%			0%	0%	
Peak Hour Factor	0.95	0.95	0.95	0.95	0.95	0.95
Hourly flow rate (vph)	6	26	19	324	76	0
Pedestrians						
Lane Width (ft)						
Walking Speed (ft/s)						
Percent Blockage						
Right turn flare (veh)						
Median type				None	None	
Median storage veh)						
Upstream signal (ft)				1230		
pX, platoon unblocked						
vC, conflicting volume	438	76	76			
vC1, stage 1 conf vol						
vC2, stage 2 conf vol						
vCu, unblocked vol	438	76	76			
tC, single (s)	6.4	6.2	4.1			
tC, 2 stage (s)						
tF (s)	3.5	3.3	2.2			
p0 queue free %	99	97	99			
cM capacity (veh/h)	569	985	1523			

Direction, Lane #	EB 1	NB 1	SB 1
Volume Total	33	343	76
Volume Left	6	19	0
Volume Right	26	0	0
cSH	863	1523	1700
Volume to Capacity	0.04	0.01	0.04
Queue Length 95th (ft)	3	1	0
Control Delay (s)	9.3	0.5	0.0
Lane LOS	A	A	
Approach Delay (s)	9.3	0.5	0.0
Approach LOS	A		

Intersection Summary			
Average Delay	1.1		
Intersection Capacity Utilization	33.9%	ICU Level of Service	A
Analysis Period (min)	15		

Movement	EBL	EBT	EBR	WBL	WBT	WBR	NBL	NBT	NBR	SBL	SBT	SBR
Lane Configurations												
Volume (veh/h)	13	4	8	3	9	17	12	299	0	4	82	7
Sign Control		Stop			Stop			Free			Free	
Grade		0%			0%			0%			0%	
Peak Hour Factor	0.93	0.93	0.93	0.93	0.93	0.93	0.93	0.93	0.93	0.93	0.93	0.93
Hourly flow rate (vph)	14	4	9	3	10	18	13	322	0	4	88	8
Pedestrians												
Lane Width (ft)												
Walking Speed (ft/s)												
Percent Blockage												
Right turn flare (veh)												
Median type								None			None	
Median storage veh)												
Upstream signal (ft)								904				
pX, platoon unblocked	0.93	0.93		0.93	0.93	0.93				0.93		
vC, conflicting volume	471	448	92	459	452	322	96			322		
vC1, stage 1 conf vol												
vC2, stage 2 conf vol												
vCu, unblocked vol	395	370	92	382	374	235	96			235		
tC, single (s)	7.1	6.5	6.2	7.1	6.5	6.2	4.1			4.1		
tC, 2 stage (s)												
tF (s)	3.5	4.0	3.3	3.5	4.0	3.3	2.2			2.2		
p0 queue free %	97	99	99	99	98	98	99			100		
cM capacity (veh/h)	501	515	965	524	512	749	1498			1241		

Direction, Lane #	EB 1	WB 1	NB 1	SB 1
Volume Total	27	31	334	100
Volume Left	14	3	13	4
Volume Right	9	18	0	8
cSH	595	630	1498	1241
Volume to Capacity	0.05	0.05	0.01	0.00
Queue Length 95th (ft)	4	4	1	0
Control Delay (s)	11.3	11.0	0.4	0.4
Lane LOS	B	B	A	A
Approach Delay (s)	11.3	11.0	0.4	0.4
Approach LOS	B	B		

Intersection Summary			
Average Delay	1.6		
Intersection Capacity Utilization	31.4%	ICU Level of Service	A
Analysis Period (min)	15		

Movement	EBL	EBT	EBR	WBL	WBT	WBR	NBL	NBT	NBR	SBL	SBT	SBR
Lane Configurations												
Volume (veh/h)	6	1	2	0	5	2	2	304	2	0	83	6
Sign Control		Stop			Stop			Free			Free	
Grade		0%			0%			0%			0%	
Peak Hour Factor	0.91	0.91	0.91	0.91	0.91	0.91	0.91	0.91	0.91	0.91	0.91	0.91
Hourly flow rate (vph)	7	1	2	0	5	2	2	334	2	0	91	7
Pedestrians												
Lane Width (ft)												
Walking Speed (ft/s)												
Percent Blockage												
Right turn flare (veh)												
Median type								None			None	
Median storage veh)												
Upstream signal (ft)								601				
pX, platoon unblocked	0.89	0.89		0.89	0.89	0.89				0.89		
vC, conflicting volume	439	435	95	437	437	335	98			336		
vC1, stage 1 conf vol												
vC2, stage 2 conf vol												
vCu, unblocked vol	301	297	95	299	299	184	98			185		
tC, single (s)	7.1	6.5	6.2	7.1	6.5	6.2	4.1			4.1		
tC, 2 stage (s)												
tF (s)	3.5	4.0	3.3	3.5	4.0	3.3	2.2			2.2		
p0 queue free %	99	100	100	100	99	100	100			100		
cM capacity (veh/h)	569	543	962	576	542	760	1495			1230		

Direction, Lane #	EB 1	WB 1	NB 1	SB 1
Volume Total	10	8	338	98
Volume Left	7	0	2	0
Volume Right	2	2	2	7
cSH	623	590	1495	1230
Volume to Capacity	0.02	0.01	0.00	0.00
Queue Length 95th (ft)	1	1	0	0
Control Delay (s)	10.9	11.2	0.1	0.0
Lane LOS	B	B	A	
Approach Delay (s)	10.9	11.2	0.1	0.0
Approach LOS	B	B		

Intersection Summary				
Average Delay		0.5		
Intersection Capacity Utilization		30.0%	ICU Level of Service	A
Analysis Period (min)		15		

Movement	EBL	EBT	EBR	WBL	WBT	WBR	NBL	NBT	NBR	SBL	SBT	SBR
Lane Configurations												
Volume (veh/h)	2	4	34	0	1	2	18	295	4	2	82	7
Sign Control		Stop			Stop			Free			Free	
Grade		0%			0%			0%			0%	
Peak Hour Factor	0.94	0.94	0.94	0.94	0.94	0.94	0.94	0.94	0.94	0.94	0.94	0.94
Hourly flow rate (vph)	2	4	36	0	1	2	19	314	4	2	87	7
Pedestrians												
Lane Width (ft)												
Walking Speed (ft/s)												
Percent Blockage												
Right turn flare (veh)												
Median type								None			None	
Median storage veh)												
Upstream signal (ft)								300				
pX, platoon unblocked	0.85	0.85		0.85	0.85	0.85				0.85		
vC, conflicting volume	452	452	91	488	453	316	95			318		
vC1, stage 1 conf vol												
vC2, stage 2 conf vol												
vCu, unblocked vol	264	263	91	306	265	103	95			106		
tC, single (s)	7.1	6.5	6.2	7.1	6.5	6.2	4.1			4.1		
tC, 2 stage (s)												
tF (s)	3.5	4.0	3.3	3.5	4.0	3.3	2.2			2.2		
p0 queue free %	100	99	96	100	100	100	99			100		
cM capacity (veh/h)	575	536	967	519	535	807	1499			1259		

Direction, Lane #	EB 1	WB 1	NB 1	SB 1
Volume Total	43	3	337	97
Volume Left	2	0	19	2
Volume Right	36	2	4	7
cSH	867	690	1499	1259
Volume to Capacity	0.05	0.00	0.01	0.00
Queue Length 95th (ft)	4	0	1	0
Control Delay (s)	9.4	10.2	0.5	0.2
Lane LOS	A	B	A	A
Approach Delay (s)	9.4	10.2	0.5	0.2
Approach LOS	A	B		

Intersection Summary				
Average Delay		1.3		
Intersection Capacity Utilization		34.3%	ICU Level of Service	A
Analysis Period (min)		15		

Lane Group	EBL	EBT	EBR	WBL	WBT	NBL	NBT	SBL	SBT
Lane Group Flow (vph)	53	468	123	160	637	242	631	17	82
v/c Ratio	0.11	0.79	0.25	0.37	0.51	0.45	0.73	0.05	0.13
Control Delay	14.0	41.5	8.4	16.4	28.3	25.4	32.4	20.6	35.8
Queue Delay	0.0	0.0	0.0	0.0	0.0	0.0	0.0	0.0	0.0
Total Delay	14.0	41.5	8.4	16.4	28.3	25.4	32.4	20.6	35.8
Queue Length 50th (ft)	16	232	3	51	173	115	146	7	24
Queue Length 95th (ft)	40	380	50	100	255	184	213	22	46
Internal Link Dist (ft)		1915			531		229		156
Turn Bay Length (ft)	130			95		155		130	
Base Capacity (vph)	514	690	571	431	1435	539	983	368	767
Starvation Cap Reductn	0	0	0	0	0	0	0	0	0
Spillback Cap Reductn	0	0	0	0	0	0	0	0	0
Storage Cap Reductn	0	0	0	0	0	0	0	0	0
Reduced v/c Ratio	0.10	0.68	0.22	0.37	0.44	0.45	0.64	0.05	0.11

Intersection Summary

Movement	EBL	EBT	EBR	WBL	WBT	WBR	NBL	NBT	NBR	SBL	SBT	SBR
Lane Configurations												
Volume (vph)	50	445	117	152	545	60	230	309	291	16	76	2
Ideal Flow (vphpl)	1900	1900	1900	1900	1900	1900	1900	1900	1900	1900	1900	1900
Total Lost time (s)	3.0	3.0	5.0	3.0	3.0		3.0	3.0		3.0	3.0	
Lane Util. Factor	1.00	1.00	1.00	1.00	0.95		1.00	0.95		1.00	0.95	
Frt	1.00	1.00	0.85	1.00	0.99		1.00	0.93		1.00	1.00	
Flt Protected	0.95	1.00	1.00	0.95	1.00		0.95	1.00		0.95	1.00	
Satd. Flow (prot)	1770	1863	1583	1770	3487		1770	3282		1770	3526	
Flt Permitted	0.33	1.00	1.00	0.35	1.00		0.70	1.00		0.30	1.00	
Satd. Flow (perm)	623	1863	1583	657	3487		1306	3282		560	3526	
Peak-hour factor, PHF	0.95	0.95	0.95	0.95	0.95	0.95	0.95	0.95	0.95	0.95	0.95	0.95
Adj. Flow (vph)	53	468	123	160	574	63	242	325	306	17	80	2
RTOR Reduction (vph)	0	0	87	0	7	0	0	145	0	0	2	0
Lane Group Flow (vph)	53	468	36	160	630	0	242	486	0	17	80	0
Turn Type	custom	NA	custom	custom	NA		custom	NA		custom	NA	
Protected Phases	1 2	2 4		1 3	3 4		5 6	6 8		5 7	7 8	
Permitted Phases	4		4	4			8			8		
Actuated Green, G (s)	42.7	30.9	26.7	40.6	34.8		33.3	18.7		26.9	18.3	
Effective Green, g (s)	42.7	30.9	26.7	40.6	34.8		33.3	18.7		26.9	18.3	
Actuated g/C Ratio	0.41	0.29	0.25	0.39	0.33		0.32	0.18		0.26	0.17	
Clearance Time (s)			5.0									
Vehicle Extension (s)			3.0									
Lane Grp Cap (vph)	429	549	403	402	1158		502	586		297	616	
v/s Ratio Prot	0.02	c0.25		c0.05	c0.18		c0.09	c0.15		0.01	c0.02	
v/s Ratio Perm	0.03		0.02	0.10			0.06			0.01		
v/c Ratio	0.12	0.85	0.09	0.40	0.54		0.48	0.83		0.06	0.13	
Uniform Delay, d1	19.1	34.8	29.8	22.0	28.5		28.3	41.5		29.3	36.5	
Progression Factor	1.00	1.00	1.00	1.00	1.00		1.00	1.00		1.00	1.00	
Incremental Delay, d2	0.1	12.2	0.1	0.6	0.5		0.7	9.4		0.1	0.1	
Delay (s)	19.2	47.0	29.9	22.6	29.1		29.0	50.9		29.4	36.6	
Level of Service	B	D	C	C	C		C	D		C	D	
Approach Delay (s)		41.4			27.8			44.8			35.4	
Approach LOS		D			C			D			D	

Intersection Summary			
HCM Average Control Delay	37.9	HCM Level of Service	D
HCM Volume to Capacity ratio	0.67		
Actuated Cycle Length (s)	104.8	Sum of lost time (s)	24.0
Intersection Capacity Utilization	61.3%	ICU Level of Service	B
Analysis Period (min)	15		
c Critical Lane Group			

Movement	EBL	EBT	WBT	WBR	SBL	SBR
Lane Configurations						
Volume (veh/h)	297	578	724	32	22	81
Sign Control		Free	Free		Stop	
Grade		0%	0%		0%	
Peak Hour Factor	0.88	0.88	0.88	0.88	0.88	0.88
Hourly flow rate (vph)	338	657	823	36	25	92
Pedestrians						
Lane Width (ft)						
Walking Speed (ft/s)						
Percent Blockage						
Right turn flare (veh)						
Median type		None	None			
Median storage veh)						
Upstream signal (ft)		611				
pX, platoon unblocked					0.84	
vC, conflicting volume	859				2173	841
vC1, stage 1 conf vol						
vC2, stage 2 conf vol						
vCu, unblocked vol	859				2305	841
tC, single (s)	4.1				6.4	6.2
tC, 2 stage (s)						
tF (s)	2.2				3.5	3.3
p0 queue free %	57				0	75
cM capacity (veh/h)	782				20	365

Direction, Lane #	EB 1	EB 2	WB 1	SB 1
Volume Total	338	657	859	117
Volume Left	338	0	0	25
Volume Right	0	0	36	92
cSH	782	1700	1700	78
Volume to Capacity	0.43	0.39	0.51	1.50
Queue Length 95th (ft)	55	0	0	237
Control Delay (s)	13.1	0.0	0.0	371.8
Lane LOS	B			F
Approach Delay (s)	4.4		0.0	371.8
Approach LOS				F

Intersection Summary			
Average Delay	24.3		
Intersection Capacity Utilization	72.7%	ICU Level of Service	C
Analysis Period (min)	15		

Lane Group	EBL	EBT	WBL	WBT	NBL	NBT	SBL	SBT
Lane Group Flow (vph)	489	610	192	659	71	2379	140	1796
v/c Ratio	1.09	0.68	0.70	1.14	0.61	1.11	1.09	0.83
Control Delay	126.7	61.8	81.0	143.3	47.5	100.9	141.5	46.8
Queue Delay	0.0	0.0	0.0	0.0	0.0	0.0	0.0	0.0
Total Delay	126.7	61.8	81.0	143.3	47.5	100.9	141.5	46.8
Queue Length 50th (ft)	~612	325	224	~470	41	~1104	~122	642
Queue Length 95th (ft)	#755	364	303	#544	75	#1043	#246	632
Internal Link Dist (ft)		364		1915		469		768
Turn Bay Length (ft)			286		160		130	
Base Capacity (vph)	448	895	275	577	118	2148	128	2163
Starvation Cap Reductn	0	0	0	0	0	0	0	0
Spillback Cap Reductn	0	0	0	0	0	0	0	0
Storage Cap Reductn	0	0	0	0	0	0	0	0
Reduced v/c Ratio	1.09	0.68	0.70	1.14	0.60	1.11	1.09	0.83

Intersection Summary

~ Volume exceeds capacity, queue is theoretically infinite.
Queue shown is maximum after two cycles.

95th percentile volume exceeds capacity, queue may be longer.
Queue shown is maximum after two cycles.

Movement	EBL	EBT	EBR	WBL	WBT	WBR	NBL	NBT	NBR	SBL	SBT	SBR
Lane Configurations												
Volume (vph)	411	507	5	179	529	7	60	1952	46	118	1367	142
Ideal Flow (vphpl)	1900	1900	1900	1900	1900	1900	1900	1900	1900	1900	1900	1900
Total Lost time (s)	5.0	5.0		5.0	5.0		3.0	5.0		3.0	5.0	
Lane Util. Factor	1.00	0.95		0.91	0.91		1.00	0.91		1.00	0.91	
Frt	1.00	1.00		1.00	1.00		1.00	1.00		1.00	0.99	
Flt Protected	0.95	1.00		0.95	1.00		0.95	1.00		0.95	1.00	
Satd. Flow (prot)	1770	3534		1610	3379		1770	5068		1770	5014	
Flt Permitted	0.95	1.00		0.95	1.00		0.06	1.00		0.05	1.00	
Satd. Flow (perm)	1770	3534		1610	3379		103	5068		102	5014	
Peak-hour factor, PHF	0.84	0.84	0.84	0.84	0.84	0.84	0.84	0.84	0.84	0.84	0.84	0.84
Adj. Flow (vph)	489	604	6	213	630	8	71	2324	55	140	1627	169
RTOR Reduction (vph)	0	1	0	0	1	0	0	1	0	0	7	0
Lane Group Flow (vph)	489	609	0	192	658	0	71	2378	0	140	1789	0
Turn Type	Split	NA		Split	NA		pm+pt	NA		pm+pt	NA	
Protected Phases	4	4		8	8		5	2		1	6	
Permitted Phases							2			6		
Actuated Green, G (s)	43.0	43.0		29.0	29.0		78.9	72.0		81.1	73.1	
Effective Green, g (s)	43.0	43.0		29.0	29.0		78.9	72.0		81.1	73.1	
Actuated g/C Ratio	0.25	0.25		0.17	0.17		0.46	0.42		0.48	0.43	
Clearance Time (s)	5.0	5.0		5.0	5.0		3.0	5.0		3.0	5.0	
Vehicle Extension (s)	3.0	3.0		3.0	3.0		3.0	3.0		3.0	3.0	
Lane Grp Cap (vph)	448	894		275	576		115	2146		127	2156	
v/s Ratio Prot	c0.28	0.17		0.12	c0.19		0.02	0.47		c0.05	0.36	
v/s Ratio Perm							0.26			c0.47		
v/c Ratio	1.09	0.68		0.70	1.14		0.62	1.11		1.10	0.83	
Uniform Delay, d1	63.5	57.3		66.4	70.5		34.7	49.0		48.2	42.9	
Progression Factor	1.00	1.00		1.00	1.00		1.00	1.00		1.00	1.00	
Incremental Delay, d2	69.6	2.2		7.5	83.5		9.5	56.1		110.0	2.8	
Delay (s)	133.1	59.5		73.9	154.0		44.1	105.1		158.2	45.7	
Level of Service	F	E		E	F		D	F		F	D	
Approach Delay (s)		92.2			135.9			103.3			53.9	
Approach LOS		F			F			F			D	

Intersection Summary			
HCM Average Control Delay	90.7	HCM Level of Service	F
HCM Volume to Capacity ratio	1.10		
Actuated Cycle Length (s)	170.0	Sum of lost time (s)	16.0
Intersection Capacity Utilization	98.5%	ICU Level of Service	F
Analysis Period (min)	15		
c Critical Lane Group			

Movement	EBL	EBT	EBR	WBL	WBT	WBR	NBL	NBT	NBR	SBL	SBT	SBR
Lane Configurations												
Volume (vph)	411	507	5	179	529	7	60	1952	46	118	1367	142
Movement Number	7	4	14	3	8	18	5	2	12	1	6	16
Initial Queue, veh	0	0	0	0	0	0	0	0	0	0	0	0
Ped-Bike Adj. Factor (A_pbT)	1.00		1.00	1.00		1.00	1.00		1.00	1.00		1.00
Parking, Bus Adj. Factors	1.00	1.00	1.00	1.00	1.00	1.00	1.00	1.00	1.00	1.00	1.00	1.00
Adj. Sat. Flow Rate, veh/h/ln	1863	1863	1863	1863	1863	1863	1863	1863	1863	1863	1863	1863
Lanes	1	2	0	1	2	0	1	3	0	1	3	0
Lane Assignment												
Capacity, veh/h	449	932	9	303	626	8	137	2165	51	126	2047	212
Proportion Arriving On Green	0.25	0.25	0.25	0.17	0.17	0.17	0.03	0.42	0.42	0.05	0.44	0.44
Movement Delay, s/veh	132.6	59.8	59.8	73.7	122.5	122.8	38.8	94.6	103.9	165.5	44.3	47.1
Movement LOS	F	E	E	E	F	F	D	F	F	F	D	D
Approach Volume, veh/h		1099			851			2450			1937	
Approach Delay, s/veh		92.3			110.4			96.1			54.0	
Approach LOS		F			F			F			D	

Timer:	1	2	3	4	5	6	7	8
Assigned Phase	1	2	8	4	5	6		
Case No	1.1	4.0	10.0	10.0	1.1	4.0		
Phase Duration (G+Y+Rc), s	11.00	77.00	34.00	48.00	8.68	79.32		
Change Period (Y+Rc), s	3.00	5.00	5.00	5.00	3.00	5.00		
Max. Allowable Headway (MAH), s	4.00	3.92	3.93	3.95	4.00	3.92		
Maximum Green Setting (Gmax), s	8.00	72.00	29.00	43.00	7.00	73.00		
Max. Queue Clearance Time (g_c+I1), s	10.00	74.00	31.00	45.00	5.87	53.12		
Green Extension Time (g_e), s	0.00	0.00	0.00	0.00	0.01	17.57		
Probability of Phase Call (p_c)	0.999	1.000	1.000	1.000	0.966	1.000		
Probability of Max Out (p_x)	1.000	1.000	1.000	1.000	1.000	0.885		

Left-Turn Movement Data					
Assigned Movement	1		3	7	5
Mvmt. Sat Flow, veh/h	1774.04		1774.04	1774.04	1774.04

Through Movement Data					
Assigned Movement		2	8	4	6
Mvmt. Sat Flow, veh/h		5111.65	3668.40	3682.77	4681.80

Right-Turn Movement Data					
Assigned Movement		12	18	14	16
Mvmt. Sat Flow, veh/h		120.10	48.53	36.31	485.47

Left Lane Group Data								
Assigned Movement	1	0	3	7	5	0	0	0
Lane Assignment	L (Pr/Pm)		L		LL (Pr/Pm)			
Lanes in Group	1	0	1	1	1	0	0	0
Group Volume (v), veh/h	140.5	0.0	213.1	489.3	71.4	0.0	0.0	0.0
Group Sat. Flow (s), veh/h/ln	1774.0	0.0	1774.0	1774.0	1774.0	0.0	0.0	0.0
Queue Serve Time (g_s), s	8.0	0.0	19.2	43.0	3.9	0.0	0.0	0.0
Cycle Queue Clear Time (g_c), s	8.0	0.0	19.2	43.0	3.9	0.0	0.0	0.0

Perm LT Sat Flow Rate (s_l), veh/h/ln	147.5	0.0	1774.0	1774.0	261.6	0.0	0.0	0.0
Shared LT Sat Flow (s_sh), veh/h/ln	0.0	0.0	0.0	0.0	0.0	0.0	0.0	0.0
Perm LT Eff. Green (g_p), s	75.6	0.0	0.0	0.0	72.0	0.0	0.0	0.0
Perm LT Serve Time (g_u), s	0.0	0.0	0.0	0.0	23.2	0.0	0.0	0.0
Perm LT Que Serve Time (g_ps), s	0.0	0.0	0.0	0.0	18.3	0.0	0.0	0.0
Time to First Blk (g_f), s	0.0	0.0	0.0	0.0	0.0	0.0	0.0	0.0
Serve Time pre Blk (g_fs), s	0.0	0.0	0.0	0.0	0.0	0.0	0.0	0.0
Proportion LT Inside Lane (P_L)	1.000	0.000	1.000	1.000	1.000	0.000	0.000	0.000
Lane Group Capacity (c), veh/h	125.8	0.0	302.6	448.7	137.4	0.0	0.0	0.0
Volume-to-Capacity Ratio (X)	1.116	0.000	0.704	1.090	0.520	0.000	0.000	0.000
Available Capacity (c_a), veh/h	125.8	0.0	302.6	448.7	151.1	0.0	0.0	0.0
Upstream Filter Factor (I)	1.000	0.000	1.000	1.000	1.000	0.000	0.000	0.000
Uniform Delay (d1), s/veh	50.6	0.0	66.5	63.5	35.8	0.0	0.0	0.0
Incremental Delay (d2), s/veh	114.9	0.0	7.2	69.1	3.0	0.0	0.0	0.0
Initial Queue Delay (d3), s/veh	0.0	0.0	0.0	0.0	0.0	0.0	0.0	0.0
Control Delay (d), s/veh	165.5	0.0	73.7	132.6	38.8	0.0	0.0	0.0
First-Term Queue (Q1), veh/ln	3.6	0.0	8.8	19.5	1.7	0.0	0.0	0.0
Second-Term Queue (Q2), veh/ln	4.0	0.0	0.6	8.6	0.1	0.0	0.0	0.0
Third-Term Queue (Q3), veh/ln	0.0	0.0	0.0	0.0	0.0	0.0	0.0	0.0
Percentile bk-of-que factor (f_B%)	1.000	0.000	1.000	1.000	1.000	0.000	0.000	0.000
Percentile Back of Queue (Q%), veh/ln	7.6	0.0	9.4	28.1	1.8	0.0	0.0	0.0
Percentile Storage Ratio (RQ%)	1.48	0.00	0.83	2.07	0.29	0.00	0.00	0.00
Initial Queue (Qb), veh	0.0	0.0	0.0	0.0	0.0	0.0	0.0	0.0
Final (Residual) Queue (Qe), veh	3.7	0.0	0.0	10.1	0.0	0.0	0.0	0.0
Saturated Delay (ds), s/veh	0.0	0.0	0.0	0.0	0.0	0.0	0.0	0.0
Saturated Queue (Qs), veh	0.0	0.0	0.0	0.0	0.0	0.0	0.0	0.0
Saturated Capacity (cs), veh/h	0.0	0.0	0.0	0.0	0.0	0.0	0.0	0.0
Initial Queue Clear Time (tc), h	0.3	0.0	0.0	0.3	0.0	0.0	0.0	0.0
Middle Lane Group Data								
Assigned Movement	0	2	8	4	0	6	0	0
Lane Assignment		T	T	T		T		
Lanes in Group	0	2	1	1	0	2	0	0
Group Volume (v), veh/h	0.0	1538.9	319.7	305.2	0.0	1177.6	0.0	0.0
Group Sat. Flow (s), veh/h/ln	0.0	1695.1	1862.7	1862.7	0.0	1695.1	0.0	0.0
Queue Serve Time (g_s), s	0.0	72.0	29.0	24.9	0.0	50.9	0.0	0.0
Cycle Queue Clear Time (g_c), s	0.0	72.0	29.0	24.9	0.0	50.9	0.0	0.0
Lane Group Capacity (c), veh/h	0.0	1435.8	317.8	471.2	0.0	1482.0	0.0	0.0
Volume-to-Capacity Ratio (X)	0.000	1.072	1.006	0.648	0.000	0.795	0.000	0.000
Available Capacity (c_a), veh/h	0.0	1435.8	317.8	471.2	0.0	1482.0	0.0	0.0
Upstream Filter Factor (I)	0.000	1.000	1.000	1.000	0.000	1.000	0.000	0.000
Uniform Delay (d1), s/veh	0.0	49.0	70.5	56.7	0.0	41.3	0.0	0.0
Incremental Delay (d2), s/veh	0.0	45.6	52.0	3.1	0.0	3.1	0.0	0.0
Initial Queue Delay (d3), s/veh	0.0	0.0	0.0	0.0	0.0	0.0	0.0	0.0
Control Delay (d), s/veh	0.0	94.6	122.5	59.8	0.0	44.3	0.0	0.0
First-Term Queue (Q1), veh/ln	0.0	30.3	13.9	11.8	0.0	21.4	0.0	0.0
Second-Term Queue (Q2), veh/ln	0.0	9.1	4.6	0.4	0.0	0.6	0.0	0.0
Third-Term Queue (Q3), veh/ln	0.0	0.0	0.0	0.0	0.0	0.0	0.0	0.0
Percentile bk-of-que factor (f_B%)	0.000	1.000	1.000	1.000	0.000	1.000	0.000	0.000
Percentile Back of Queue (Q%), veh/ln	0.0	39.4	18.5	12.2	0.0	22.0	0.0	0.0
Percentile Storage Ratio (RQ%)	0.00	2.19	0.25	0.90	0.00	0.76	0.00	0.00

Initial Queue (Qb), veh	0.0	0.0	0.0	0.0	0.0	0.0	0.0	0.0
Final (Residual) Queue (Qe), veh	0.0	25.8	0.5	0.0	0.0	0.0	0.0	0.0
Saturated Delay (ds), s/veh	0.0	0.0	0.0	0.0	0.0	0.0	0.0	0.0
Saturated Queue (Qs), veh	0.0	0.0	0.0	0.0	0.0	0.0	0.0	0.0
Saturated Capacity (cs), veh/h	0.0	0.0	0.0	0.0	0.0	0.0	0.0	0.0
Initial Queue Clear Time (tc), h	0.0	0.3	0.3	0.0	0.0	0.0	0.0	0.0

Right Lane Group Data								
Assigned Movement	0	12	18	14	0	16	0	0
Lane Assignment		T+R	T+R	T+R		T+R		
Lanes in Group	0	1	1	1	0	1	0	0
Group Volume (v), veh/h	0.0	839.7	318.4	304.3	0.0	618.8	0.0	0.0
Group Sat. Flow (s), veh/h/ln	0.0	1841.6	1854.2	1856.3	0.0	1777.1	0.0	0.0
Queue Serve Time (g_s), s	0.0	72.0	29.0	24.9	0.0	51.1	0.0	0.0
Cycle Queue Clear Time (g_c), s	0.0	72.0	29.0	24.9	0.0	51.1	0.0	0.0
Prot RT Sat Flow Rate (s_R), veh/h/ln	0.0	0.0	0.0	0.0	0.0	0.0	0.0	0.0
Prot RT Eff. Green (g_R), s	0.0	0.0	0.0	0.0	0.0	0.0	0.0	0.0
Proportion RT Outside Lane (P_R)	0.000	0.065	0.026	0.020	0.000	0.273	0.000	0.000
Lane Group Capacity (c), veh/h	0.0	780.0	316.3	469.5	0.0	776.8	0.0	0.0
Volume-to-Capacity Ratio (X)	0.000	1.077	1.007	0.648	0.000	0.797	0.000	0.000
Available Capacity (c_a), veh/h	0.0	780.0	316.3	469.5	0.0	776.8	0.0	0.0
Upstream Filter Factor (I)	0.000	1.000	1.000	1.000	0.000	1.000	0.000	0.000
Uniform Delay (d1), s/veh	0.0	49.0	70.5	56.7	0.0	41.3	0.0	0.0
Incremental Delay (d2), s/veh	0.0	54.9	52.3	3.1	0.0	5.8	0.0	0.0
Initial Queue Delay (d3), s/veh	0.0	0.0	0.0	0.0	0.0	0.0	0.0	0.0
Control Delay (d), s/veh	0.0	103.9	122.8	59.8	0.0	47.1	0.0	0.0
First-Term Queue (Q1), veh/ln	0.0	32.9	13.8	11.8	0.0	22.5	0.0	0.0
Second-Term Queue (Q2), veh/ln	0.0	11.9	4.6	0.4	0.0	1.3	0.0	0.0
Third-Term Queue (Q3), veh/ln	0.0	0.0	0.0	0.0	0.0	0.0	0.0	0.0
Percentile bk-of-que factor (f_B%)	0.000	1.000	1.000	1.000	0.000	1.000	0.000	0.000
Percentile Back of Queue (Q%), veh/ln	0.0	44.8	18.4	12.2	0.0	23.7	0.0	0.0
Percentile Storage Ratio (RQ%)	0.00	2.49	0.25	0.90	0.00	0.82	0.00	0.00
Initial Queue (Qb), veh	0.0	0.0	0.0	0.0	0.0	0.0	0.0	0.0
Final (Residual) Queue (Qe), veh	0.0	14.9	0.5	0.0	0.0	0.0	0.0	0.0
Saturated Delay (ds), s/veh	0.0	0.0	0.0	0.0	0.0	0.0	0.0	0.0
Saturated Queue (Qs), veh	0.0	0.0	0.0	0.0	0.0	0.0	0.0	0.0
Saturated Capacity (cs), veh/h	0.0	0.0	0.0	0.0	0.0	0.0	0.0	0.0
Initial Queue Clear Time (tc), h	0.0	0.3	0.3	0.0	0.0	0.0	0.0	0.0

Intersection Summary	
HCM Average Control Delay	84.5
HCM Level of Service	F

Movement	EBL	EBT	EBR	WBL	WBT	WBR	NEL	NET	NER	SWL	SWT	SWR
Lane Configurations												
Volume (veh/h)	15	5	0	0	6	11	37	2697	22	0	0	0
Sign Control		Stop			Stop			Free			Free	
Grade		0%			0%			0%			0%	
Peak Hour Factor	0.96	0.96	0.96	0.96	0.96	0.96	0.96	0.96	0.96	0.96	0.96	0.96
Hourly flow rate (vph)	16	5	0	0	6	11	39	2809	23	0	0	0
Pedestrians												
Lane Width (ft)												
Walking Speed (ft/s)												
Percent Blockage												
Right turn flare (veh)												
Median type								None			None	
Median storage veh)												
Upstream signal (ft)												
pX, platoon unblocked												
vC, conflicting volume	1028	2909	0	2901	2898	948	0			2832		
vC1, stage 1 conf vol												
vC2, stage 2 conf vol												
vCu, unblocked vol	1028	2909	0	2901	2898	948	0			2832		
tC, single (s)	7.5	6.5	6.9	7.5	6.5	6.9	4.1			4.1		
tC, 2 stage (s)												
tF (s)	3.5	4.0	3.3	3.5	4.0	3.3	2.2			2.2		
p0 queue free %	87	65	100	100	59	96	98			100		
cM capacity (veh/h)	120	15	1084	5	15	262	1622			132		

Direction, Lane #	EB 1	WB 1	NE 1	NE 2	NE 3
Volume Total	21	18	741	1405	725
Volume Left	16	0	39	0	0
Volume Right	0	11	0	0	23
cSH	44	39	1622	1700	1700
Volume to Capacity	0.48	0.45	0.02	0.83	0.43
Queue Length 95th (ft)	43	39	2	0	0
Control Delay (s)	147.7	158.8	0.7	0.0	0.0
Lane LOS	F	F	A		
Approach Delay (s)	147.7	158.8	0.2		
Approach LOS	F	F			

Intersection Summary			
Average Delay	2.2		
Intersection Capacity Utilization	67.8%	ICU Level of Service	C
Analysis Period (min)	15		

Movement	EBL	EBT	EBR	WBL	WBT	WBR	NEL	NET	NER	SWL	SWT	SWR
Lane Configurations												
Volume (veh/h)	2	12	0	0	12	13	6	2720	25	0	0	0
Sign Control		Stop			Stop			Free			Free	
Grade		0%			0%			0%			0%	
Peak Hour Factor	0.93	0.93	0.93	0.93	0.93	0.93	0.93	0.93	0.93	0.93	0.93	0.93
Hourly flow rate (vph)	2	13	0	0	13	14	6	2925	27	0	0	0
Pedestrians												
Lane Width (ft)												
Walking Speed (ft/s)												
Percent Blockage												
Right turn flare (veh)												
Median type								None			None	
Median storage veh)												
Upstream signal (ft)												
pX, platoon unblocked												
vC, conflicting volume	1008	2965	0	2958	2951	988	0			2952		
vC1, stage 1 conf vol												
vC2, stage 2 conf vol												
vCu, unblocked vol	1008	2965	0	2958	2951	988	0			2952		
tC, single (s)	7.5	6.5	6.9	7.5	6.5	6.9	4.1			4.1		
tC, 2 stage (s)												
tF (s)	3.5	4.0	3.3	3.5	4.0	3.3	2.2			2.2		
p0 queue free %	95	8	100	100	10	94	100			100		
cM capacity (veh/h)	41	14	1084	1	14	246	1622			118		

Direction, Lane #	EB 1	WB 1	NE 1	NE 2	NE 3
Volume Total	15	27	738	1462	758
Volume Left	2	0	6	0	0
Volume Right	0	14	0	0	27
cSH	15	28	1622	1700	1700
Volume to Capacity	0.97	0.96	0.00	0.86	0.45
Queue Length 95th (ft)	59	78	0	0	0
Control Delay (s)	549.8	358.7	0.1	0.0	0.0
Lane LOS	F	F	A		
Approach Delay (s)	549.8	358.7	0.0		
Approach LOS	F	F			

Intersection Summary				
Average Delay		6.0		
Intersection Capacity Utilization		63.2%	ICU Level of Service	B
Analysis Period (min)		15		

Movement	EBL	EBR	NBL	NBT	SBT	SBR
Lane Configurations						
Volume (veh/h)	2	0	2	295	82	2
Sign Control	Stop			Free	Free	
Grade	0%			0%	0%	
Peak Hour Factor	0.92	0.92	0.92	0.92	0.92	0.92
Hourly flow rate (vph)	2	0	2	321	89	2
Pedestrians						
Lane Width (ft)						
Walking Speed (ft/s)						
Percent Blockage						
Right turn flare (veh)						
Median type				None	None	
Median storage veh)						
Upstream signal (ft)						
pX, platoon unblocked						
vC, conflicting volume	415	90	91			
vC1, stage 1 conf vol						
vC2, stage 2 conf vol						
vCu, unblocked vol	415	90	91			
tC, single (s)	6.4	6.2	4.1			
tC, 2 stage (s)						
tF (s)	3.5	3.3	2.2			
p0 queue free %	100	100	100			
cM capacity (veh/h)	593	968	1504			

Direction, Lane #	EB 1	NB 1	SB 1
Volume Total	2	323	91
Volume Left	2	2	0
Volume Right	0	0	2
cSH	593	1504	1700
Volume to Capacity	0.00	0.00	0.05
Queue Length 95th (ft)	0	0	0
Control Delay (s)	11.1	0.1	0.0
Lane LOS	B	A	
Approach Delay (s)	11.1	0.1	0.0
Approach LOS	B		

Intersection Summary			
Average Delay	0.1		
Intersection Capacity Utilization	27.1%	ICU Level of Service	A
Analysis Period (min)	15		

Movement	EBL	EBR	NBL	NBT	SBT	SBR
Lane Configurations						
Volume (veh/h)	2	1	1	304	83	1
Sign Control	Stop			Free	Free	
Grade	0%			0%	0%	
Peak Hour Factor	0.92	0.92	0.92	0.92	0.92	0.92
Hourly flow rate (vph)	2	1	1	330	90	1
Pedestrians						
Lane Width (ft)						
Walking Speed (ft/s)						
Percent Blockage						
Right turn flare (veh)						
Median type				None	None	
Median storage veh)						
Upstream signal (ft)						
pX, platoon unblocked						
vC, conflicting volume	423	91	91			
vC1, stage 1 conf vol						
vC2, stage 2 conf vol						
vCu, unblocked vol	423	91	91			
tC, single (s)	6.4	6.2	4.1			
tC, 2 stage (s)						
tF (s)	3.5	3.3	2.2			
p0 queue free %	100	100	100			
cM capacity (veh/h)	587	967	1504			

Direction, Lane #	EB 1	NB 1	SB 1
Volume Total	3	332	91
Volume Left	2	1	0
Volume Right	1	0	1
cSH	675	1504	1700
Volume to Capacity	0.00	0.00	0.05
Queue Length 95th (ft)	0	0	0
Control Delay (s)	10.4	0.0	0.0
Lane LOS	B	A	
Approach Delay (s)	10.4	0.0	0.0
Approach LOS	B		

Intersection Summary			
Average Delay	0.1		
Intersection Capacity Utilization	26.8%	ICU Level of Service	A
Analysis Period (min)	15		

Movement	EBL	EBR	NBL	NBT	SBT	SBR
Lane Configurations						
Volume (veh/h)	18	3	0	299	82	5
Sign Control	Stop			Free	Free	
Grade	0%			0%	0%	
Peak Hour Factor	0.92	0.92	0.92	0.92	0.92	0.92
Hourly flow rate (vph)	20	3	0	325	89	5
Pedestrians						
Lane Width (ft)						
Walking Speed (ft/s)						
Percent Blockage						
Right turn flare (veh)						
Median type				None	None	
Median storage veh)						
Upstream signal (ft)						
pX, platoon unblocked						
vC, conflicting volume	417	92	95			
vC1, stage 1 conf vol						
vC2, stage 2 conf vol						
vCu, unblocked vol	417	92	95			
tC, single (s)	6.4	6.2	4.1			
tC, 2 stage (s)						
tF (s)	3.5	3.3	2.2			
p0 queue free %	97	100	100			
cM capacity (veh/h)	592	966	1499			

Direction, Lane #	EB 1	NB 1	SB 1
Volume Total	23	325	95
Volume Left	20	0	0
Volume Right	3	0	5
cSH	627	1499	1700
Volume to Capacity	0.04	0.00	0.06
Queue Length 95th (ft)	3	0	0
Control Delay (s)	11.0	0.0	0.0
Lane LOS	B		
Approach Delay (s)	11.0	0.0	0.0
Approach LOS	B		

Intersection Summary			
Average Delay	0.6		
Intersection Capacity Utilization	25.7%	ICU Level of Service	A
Analysis Period (min)	15		

Movement	EBL	EBR	NBL	NBT	SBT	SBR
Lane Configurations						
Volume (veh/h)	27	22	15	275	53	7
Sign Control	Stop			Free	Free	
Grade	0%			0%	0%	
Peak Hour Factor	0.92	0.92	0.92	0.92	0.92	0.92
Hourly flow rate (vph)	29	24	16	299	58	8
Pedestrians						
Lane Width (ft)						
Walking Speed (ft/s)						
Percent Blockage						
Right turn flare (veh)						
Median type				None	None	
Median storage veh)						
Upstream signal (ft)						
pX, platoon unblocked						
vC, conflicting volume	393	61	65			
vC1, stage 1 conf vol						
vC2, stage 2 conf vol						
vCu, unblocked vol	393	61	65			
tC, single (s)	6.4	6.2	4.1			
tC, 2 stage (s)						
tF (s)	3.5	3.3	2.2			
p0 queue free %	95	98	99			
cM capacity (veh/h)	605	1004	1537			

Direction, Lane #	EB 1	NB 1	SB 1
Volume Total	53	315	65
Volume Left	29	16	0
Volume Right	24	0	8
cSH	736	1537	1700
Volume to Capacity	0.07	0.01	0.04
Queue Length 95th (ft)	6	1	0
Control Delay (s)	10.3	0.5	0.0
Lane LOS	B	A	
Approach Delay (s)	10.3	0.5	0.0
Approach LOS	B		

Intersection Summary			
Average Delay	1.6		
Intersection Capacity Utilization	32.0%	ICU Level of Service	A
Analysis Period (min)	15		

Movement	EBL	EBT	EBR	WBL	WBT	WBR	NBL	NBT	NBR	SBL	SBT	SBR
Lane Configurations												
Sign Control		Stop			Stop			Stop			Stop	
Volume (vph)	4	124	28	30	104	1	22	234	13	1	1	1
Peak Hour Factor	0.92	0.92	0.92	0.92	0.92	0.92	0.92	0.92	0.92	0.92	0.92	0.92
Hourly flow rate (vph)	4	135	30	33	113	1	24	254	14	1	1	1

Direction, Lane #	EB 1	WB 1	NB 1	SB 1
Volume Total (vph)	170	147	292	3
Volume Left (vph)	4	33	24	1
Volume Right (vph)	30	1	14	1
Hadj (s)	-0.07	0.07	0.02	-0.10
Departure Headway (s)	4.8	4.9	4.7	5.0
Degree Utilization, x	0.22	0.20	0.38	0.00
Capacity (veh/h)	701	680	728	646
Control Delay (s)	9.2	9.2	10.6	8.0
Approach Delay (s)	9.2	9.2	10.6	8.0
Approach LOS	A	A	B	A

Intersection Summary			
Delay	9.8		
HCM Level of Service	A		
Intersection Capacity Utilization	40.6%	ICU Level of Service	A
Analysis Period (min)	15		

HCM Unsignalized Intersection Capacity Analysis
1: SW 97th Ave. & SW 174th St.

2/11/2015

Movement	EBL	EBT	EBR	WBL	WBT	WBR	NBL	NBT	NBR	SBL	SBT	SBR
Lane Configurations												
Sign Control		Stop			Stop			Stop			Stop	
Volume (vph)	3	133	35	31	117	2	25	8	14	2	4	4
Peak Hour Factor	0.84	0.84	0.84	0.84	0.84	0.84	0.84	0.84	0.84	0.84	0.84	0.84
Hourly flow rate (vph)	4	158	42	37	139	2	30	10	17	2	5	5

Direction, Lane #	EB 1	WB 1	NB 1	SB 1
Volume Total (vph)	204	179	56	12
Volume Left (vph)	4	37	30	2
Volume Right (vph)	42	2	17	5
Hadj (s)	-0.09	0.07	-0.04	-0.17
Departure Headway (s)	4.2	4.3	4.7	4.6
Degree Utilization, x	0.24	0.22	0.07	0.02
Capacity (veh/h)	842	800	703	700
Control Delay (s)	8.5	8.5	8.1	7.7
Approach Delay (s)	8.5	8.5	8.1	7.7
Approach LOS	A	A	A	A

Intersection Summary			
Delay	8.4		
HCM Level of Service	A		
Intersection Capacity Utilization	33.3%	ICU Level of Service	A
Analysis Period (min)	15		

Lane Group	EBL	NBT	SBT	NET
Lane Group Flow (vph)	145	158	23	2466
v/c Ratio	0.71	0.50	0.11	0.76
Control Delay	75.0	17.8	56.0	19.2
Queue Delay	0.0	0.0	0.0	0.0
Total Delay	75.0	17.8	56.0	19.2
Queue Length 50th (ft)	123	14	18	516
Queue Length 95th (ft)	197	86	48	646
Internal Link Dist (ft)	257	1041	665	1300
Turn Bay Length (ft)				
Base Capacity (vph)	277	318	202	3258
Starvation Cap Reductn	0	0	0	0
Spillback Cap Reductn	0	0	0	0
Storage Cap Reductn	0	0	0	0
Reduced v/c Ratio	0.52	0.50	0.11	0.76

Intersection Summary

Movement	EBL	EBR	NBL	NBT	NBR	SBT	SBR	NEL2	NEL	NET	NER
Lane Configurations											
Volume (vph)	2	136	5	12	133	7	15	5	6	2303	29
Ideal Flow (vphpl)	1900	1900	1900	1900	1900	1900	1900	1900	1900	1900	1900
Total Lost time (s)	5.0			5.0		5.0				5.0	
Lane Util. Factor	1.00			1.00		1.00				0.91	
Frt	0.87			0.88		0.91				1.00	
Flt Protected	1.00			1.00		1.00				1.00	
Satd. Flow (prot)	1614			1637		1688				5075	
Flt Permitted	1.00			0.99		1.00				1.00	
Satd. Flow (perm)	1614			1628		1688				5075	
Peak-hour factor, PHF	0.95	0.95	0.95	0.95	0.95	0.95	0.95	0.95	0.95	0.95	0.95
Adj. Flow (vph)	2	143	5	13	140	7	16	5	6	2424	31
RTOR Reduction (vph)	0	0	0	123	0	0	0	0	0	1	0
Lane Group Flow (vph)	145	0	0	35	0	23	0	0	0	2465	0
Turn Type	NA		Perm	NA		NA		Perm	Perm	NA	
Protected Phases	3			4		8				6	
Permitted Phases			4					6	6		
Actuated Green, G (s)	17.0			16.0		16.0				86.1	
Effective Green, g (s)	17.0			16.0		16.0				86.1	
Actuated g/C Ratio	0.13			0.12		0.12				0.64	
Clearance Time (s)	5.0			5.0		5.0				5.0	
Vehicle Extension (s)	3.0			3.0		3.0				3.0	
Lane Grp Cap (vph)	205			194		201				3258	
v/s Ratio Prot	c0.09					0.01					
v/s Ratio Perm				c0.02						0.49	
v/c Ratio	0.71			0.18		0.11				0.76	
Uniform Delay, d1	56.2			53.1		52.7				16.7	
Progression Factor	1.00			1.00		1.00				1.00	
Incremental Delay, d2	10.6			2.0		1.2				1.7	
Delay (s)	66.8			55.1		53.9				18.4	
Level of Service	E			E		D				B	
Approach Delay (s)	66.8			55.1		53.9				18.4	
Approach LOS	E			E		D				B	

Intersection Summary			
HCM Average Control Delay	23.3	HCM Level of Service	C
HCM Volume to Capacity ratio	0.67		
Actuated Cycle Length (s)	134.1	Sum of lost time (s)	15.0
Intersection Capacity Utilization	79.9%	ICU Level of Service	D
Analysis Period (min)	15		
c Critical Lane Group			

Movement	EBL	EBR	NBL	NBT	SBT	SBR
Lane Configurations						
Volume (veh/h)	7	37	33	155	82	6
Sign Control	Stop			Free	Free	
Grade	0%			0%	0%	
Peak Hour Factor	0.93	0.93	0.93	0.93	0.93	0.93
Hourly flow rate (vph)	8	40	35	167	88	6
Pedestrians						
Lane Width (ft)						
Walking Speed (ft/s)						
Percent Blockage						
Right turn flare (veh)						
Median type				None	None	
Median storage veh)						
Upstream signal (ft)					1121	
pX, platoon unblocked						
vC, conflicting volume	329	91	95			
vC1, stage 1 conf vol						
vC2, stage 2 conf vol						
vCu, unblocked vol	329	91	95			
tC, single (s)	6.4	6.2	4.1			
tC, 2 stage (s)						
tF (s)	3.5	3.3	2.2			
p0 queue free %	99	96	98			
cM capacity (veh/h)	650	966	1499			

Direction, Lane #	EB 1	NB 1	SB 1
Volume Total	47	202	95
Volume Left	8	35	0
Volume Right	40	0	6
cSH	897	1499	1700
Volume to Capacity	0.05	0.02	0.06
Queue Length 95th (ft)	4	2	0
Control Delay (s)	9.2	1.5	0.0
Lane LOS	A	A	
Approach Delay (s)	9.2	1.5	0.0
Approach LOS	A		

Intersection Summary			
Average Delay	2.1		
Intersection Capacity Utilization	26.6%	ICU Level of Service	A
Analysis Period (min)	15		

Movement	WBL	WBR	NBT	NBR	SBL	SBT
Lane Configurations						
Volume (veh/h)	23	18	157	6	14	79
Sign Control	Stop		Free			Free
Grade	0%		0%			0%
Peak Hour Factor	0.97	0.97	0.97	0.97	0.97	0.97
Hourly flow rate (vph)	24	19	162	6	14	81
Pedestrians						
Lane Width (ft)						
Walking Speed (ft/s)						
Percent Blockage						
Right turn flare (veh)						
Median type			None			None
Median storage veh)						
Upstream signal (ft)						
pX, platoon unblocked						
vC, conflicting volume	275	165			168	
vC1, stage 1 conf vol						
vC2, stage 2 conf vol						
vCu, unblocked vol	275	165			168	
tC, single (s)	6.4	6.2			4.1	
tC, 2 stage (s)						
tF (s)	3.5	3.3			2.2	
p0 queue free %	97	98			99	
cM capacity (veh/h)	707	880			1410	

Direction, Lane #	WB 1	NB 1	SB 1
Volume Total	42	168	96
Volume Left	24	0	14
Volume Right	19	6	0
cSH	774	1700	1410
Volume to Capacity	0.05	0.10	0.01
Queue Length 95th (ft)	4	0	1
Control Delay (s)	9.9	0.0	1.2
Lane LOS	A		A
Approach Delay (s)	9.9	0.0	1.2
Approach LOS	A		

Intersection Summary			
Average Delay	1.7		
Intersection Capacity Utilization	26.1%	ICU Level of Service	A
Analysis Period (min)	15		

Movement	EBL	EBR	NBL	NBT	SBT	SBR
Lane Configurations						
Volume (veh/h)	11	27	7	170	97	2
Sign Control	Stop			Free	Free	
Grade	0%			0%	0%	
Peak Hour Factor	0.94	0.94	0.94	0.94	0.94	0.94
Hourly flow rate (vph)	12	29	7	181	103	2
Pedestrians						
Lane Width (ft)						
Walking Speed (ft/s)						
Percent Blockage						
Right turn flare (veh)						
Median type				None	None	
Median storage veh)						
Upstream signal (ft)				1230		
pX, platoon unblocked						
vC, conflicting volume	300	104	105			
vC1, stage 1 conf vol						
vC2, stage 2 conf vol						
vCu, unblocked vol	300	104	105			
tC, single (s)	6.4	6.2	4.1			
tC, 2 stage (s)						
tF (s)	3.5	3.3	2.2			
p0 queue free %	98	97	99			
cM capacity (veh/h)	688	950	1486			

Direction, Lane #	EB 1	NB 1	SB 1
Volume Total	40	188	105
Volume Left	12	7	0
Volume Right	29	0	2
cSH	856	1486	1700
Volume to Capacity	0.05	0.01	0.06
Queue Length 95th (ft)	4	0	0
Control Delay (s)	9.4	0.3	0.0
Lane LOS	A	A	
Approach Delay (s)	9.4	0.3	0.0
Approach LOS	A		

Intersection Summary			
Average Delay	1.3		
Intersection Capacity Utilization	24.6%	ICU Level of Service	A
Analysis Period (min)	15		

Movement	EBL	EBT	EBR	WBL	WBT	WBR	NBL	NBT	NBR	SBL	SBT	SBR
Lane Configurations												
Volume (veh/h)	1	0	7	3	2	2	3	178	6	1	113	7
Sign Control		Stop			Stop			Free			Free	
Grade		0%			0%			0%			0%	
Peak Hour Factor	0.92	0.92	0.92	0.92	0.92	0.92	0.92	0.92	0.92	0.92	0.92	0.92
Hourly flow rate (vph)	1	0	8	3	2	2	3	193	7	1	123	8
Pedestrians												
Lane Width (ft)												
Walking Speed (ft/s)												
Percent Blockage												
Right turn flare (veh)												
Median type								None			None	
Median storage veh)												
Upstream signal (ft)								904				
pX, platoon unblocked												
vC, conflicting volume	335	335	127	340	336	197	130			200		
vC1, stage 1 conf vol												
vC2, stage 2 conf vol												
vCu, unblocked vol	335	335	127	340	336	197	130			200		
tC, single (s)	7.1	6.5	6.2	7.1	6.5	6.2	4.1			4.1		
tC, 2 stage (s)												
tF (s)	3.5	4.0	3.3	3.5	4.0	3.3	2.2			2.2		
p0 queue free %	100	100	99	99	100	100	100			100		
cM capacity (veh/h)	614	583	924	608	583	844	1455			1372		

Direction, Lane #	EB 1	WB 1	NB 1	SB 1
Volume Total	9	8	203	132
Volume Left	1	3	3	1
Volume Right	8	2	7	8
cSH	869	652	1455	1372
Volume to Capacity	0.01	0.01	0.00	0.00
Queue Length 95th (ft)	1	1	0	0
Control Delay (s)	9.2	10.6	0.1	0.1
Lane LOS	A	B	A	A
Approach Delay (s)	9.2	10.6	0.1	0.1
Approach LOS	A	B		

Intersection Summary			
Average Delay	0.6		
Intersection Capacity Utilization	21.7%	ICU Level of Service	A
Analysis Period (min)	15		

Movement	EBL	EBT	EBR	WBL	WBT	WBR	NBL	NBT	NBR	SBL	SBT	SBR
Lane Configurations												
Volume (veh/h)	0	0	2	0	1	1	2	182	1	0	123	2
Sign Control		Stop			Stop			Free			Free	
Grade		0%			0%			0%			0%	
Peak Hour Factor	0.95	0.95	0.95	0.95	0.95	0.95	0.95	0.95	0.95	0.95	0.95	0.95
Hourly flow rate (vph)	0	0	2	0	1	1	2	192	1	0	129	2
Pedestrians												
Lane Width (ft)												
Walking Speed (ft/s)												
Percent Blockage												
Right turn flare (veh)												
Median type								None			None	
Median storage veh)												
Upstream signal (ft)								601				
pX, platoon unblocked												
vC, conflicting volume	328	327	131	329	328	192	132			193		
vC1, stage 1 conf vol												
vC2, stage 2 conf vol												
vCu, unblocked vol	328	327	131	329	328	192	132			193		
tC, single (s)	7.1	6.5	6.2	7.1	6.5	6.2	4.1			4.1		
tC, 2 stage (s)												
tF (s)	3.5	4.0	3.3	3.5	4.0	3.3	2.2			2.2		
p0 queue free %	100	100	100	100	100	100	100			100		
cM capacity (veh/h)	622	590	919	622	590	849	1454			1381		

Direction, Lane #	EB 1	WB 1	NB 1	SB 1
Volume Total	2	2	195	132
Volume Left	0	0	2	0
Volume Right	2	1	1	2
cSH	919	696	1454	1381
Volume to Capacity	0.00	0.00	0.00	0.00
Queue Length 95th (ft)	0	0	0	0
Control Delay (s)	8.9	10.2	0.1	0.0
Lane LOS	A	B	A	
Approach Delay (s)	8.9	10.2	0.1	0.0
Approach LOS	A	B		

Intersection Summary			
Average Delay	0.2		
Intersection Capacity Utilization	21.2%	ICU Level of Service	A
Analysis Period (min)	15		

Movement	EBL	EBT	EBR	WBL	WBT	WBR	NBL	NBT	NBR	SBL	SBT	SBR
Lane Configurations												
Volume (veh/h)	5	0	25	2	1	1	6	180	2	0	124	1
Sign Control		Stop			Stop			Free			Free	
Grade		0%			0%			0%			0%	
Peak Hour Factor	0.97	0.97	0.97	0.97	0.97	0.97	0.97	0.97	0.97	0.97	0.97	0.97
Hourly flow rate (vph)	5	0	26	2	1	1	6	186	2	0	128	1
Pedestrians												
Lane Width (ft)												
Walking Speed (ft/s)												
Percent Blockage												
Right turn flare (veh)												
Median type								None			None	
Median storage veh)												
Upstream signal (ft)								300				
pX, platoon unblocked	0.95	0.95		0.95	0.95	0.95				0.95		
vC, conflicting volume	329	328	128	353	328	187	129			188		
vC1, stage 1 conf vol												
vC2, stage 2 conf vol												
vCu, unblocked vol	274	273	128	299	273	125	129			126		
tC, single (s)	7.1	6.5	6.2	7.1	6.5	6.2	4.1			4.1		
tC, 2 stage (s)												
tF (s)	3.5	4.0	3.3	3.5	4.0	3.3	2.2			2.2		
p0 queue free %	99	100	97	100	100	100	100			100		
cM capacity (veh/h)	645	603	922	604	603	884	1457			1395		

Direction, Lane #	EB 1	WB 1	NB 1	SB 1
Volume Total	31	4	194	129
Volume Left	5	2	6	0
Volume Right	26	1	2	1
cSH	860	656	1457	1395
Volume to Capacity	0.04	0.01	0.00	0.00
Queue Length 95th (ft)	3	0	0	0
Control Delay (s)	9.3	10.5	0.3	0.0
Lane LOS	A	B	A	
Approach Delay (s)	9.3	10.5	0.3	0.0
Approach LOS	A	B		

Intersection Summary			
Average Delay	1.1		
Intersection Capacity Utilization	24.4%	ICU Level of Service	A
Analysis Period (min)	15		

Lane Group	EBL	EBT	EBR	WBL	WBT	NBL	NBT	SBL	SBT
Lane Group Flow (vph)	78	429	68	205	503	142	326	13	151
v/c Ratio	0.13	0.71	0.15	0.36	0.39	0.32	0.41	0.04	0.31
Control Delay	9.2	32.1	8.1	11.4	22.6	26.2	18.3	24.5	28.5
Queue Delay	0.0	0.0	0.0	0.0	0.0	0.0	0.0	0.0	0.0
Total Delay	9.2	32.1	8.1	11.4	22.6	26.2	18.3	24.5	28.5
Queue Length 50th (ft)	16	161	0	46	106	58	41	5	29
Queue Length 95th (ft)	43	310	34	101	183	121	88	20	64
Internal Link Dist (ft)		1915			531		229		156
Turn Bay Length (ft)	130			95		155		130	
Base Capacity (vph)	676	813	622	591	1689	435	1070	317	778
Starvation Cap Reductn	0	0	0	0	0	0	0	0	0
Spillback Cap Reductn	0	0	0	0	0	0	0	0	0
Storage Cap Reductn	0	0	0	0	0	0	0	0	0
Reduced v/c Ratio	0.12	0.53	0.11	0.35	0.30	0.33	0.30	0.04	0.19

Intersection Summary

Movement	EBL	EBT	EBR	WBL	WBT	WBR	NBL	NBT	NBR	SBL	SBT	SBR
Lane Configurations												
Volume (vph)	71	390	62	187	438	20	129	152	145	12	98	39
Ideal Flow (vphpl)	1900	1900	1900	1900	1900	1900	1900	1900	1900	1900	1900	1900
Total Lost time (s)	3.0	3.0	5.0	3.0	3.0		3.0	3.0		3.0	3.0	
Lane Util. Factor	1.00	1.00	1.00	1.00	0.95		1.00	0.95		1.00	0.95	
Frt	1.00	1.00	0.85	1.00	0.99		1.00	0.93		1.00	0.96	
Flt Protected	0.95	1.00	1.00	0.95	1.00		0.95	1.00		0.95	1.00	
Satd. Flow (prot)	1770	1863	1583	1770	3516		1770	3280		1770	3388	
Flt Permitted	0.47	1.00	1.00	0.47	1.00		0.66	1.00		0.55	1.00	
Satd. Flow (perm)	870	1863	1583	868	3516		1222	3280		1033	3388	
Peak-hour factor, PHF	0.91	0.91	0.91	0.91	0.91	0.91	0.91	0.91	0.91	0.91	0.91	0.91
Adj. Flow (vph)	78	429	68	205	481	22	142	167	159	13	108	43
RTOR Reduction (vph)	0	0	51	0	3	0	0	135	0	0	37	0
Lane Group Flow (vph)	78	429	17	205	500	0	142	191	0	13	114	0
Turn Type	custom	NA	custom	custom	NA		custom	NA		custom	NA	
Protected Phases	1 2	2 4		1 3	3 4		5 6	6 8		5 7	7 8	
Permitted Phases	4		4	4			8			8		
Actuated Green, G (s)	40.5	27.1	22.8	38.3	30.9		24.1	13.9		16.8	12.6	
Effective Green, g (s)	40.5	27.1	22.8	38.3	30.9		24.1	13.9		16.8	12.6	
Actuated g/C Ratio	0.44	0.29	0.25	0.41	0.33		0.26	0.15		0.18	0.14	
Clearance Time (s)			5.0									
Vehicle Extension (s)			3.0									
Lane Grp Cap (vph)	553	546	390	511	1175		409	493		251	462	
v/s Ratio Prot	0.03	c0.23		c0.07	c0.14		c0.06	c0.06		0.00	c0.03	
v/s Ratio Perm	0.03		0.01	0.10			0.03			0.00		
v/c Ratio	0.14	0.79	0.04	0.40	0.43		0.35	0.39		0.05	0.25	
Uniform Delay, d1	15.3	30.0	26.5	18.0	23.9		27.5	35.5		31.2	35.7	
Progression Factor	1.00	1.00	1.00	1.00	1.00		1.00	1.00		1.00	1.00	
Incremental Delay, d2	0.1	7.3	0.0	0.5	0.2		0.5	0.5		0.1	0.3	
Delay (s)	15.4	37.4	26.6	18.5	24.2		28.0	36.0		31.3	36.0	
Level of Service	B	D	C	B	C		C	D		C	D	
Approach Delay (s)		33.1			22.5			33.6			35.6	
Approach LOS		C			C			C			D	

Intersection Summary			
HCM Average Control Delay	29.5	HCM Level of Service	C
HCM Volume to Capacity ratio	0.52		
Actuated Cycle Length (s)	92.5	Sum of lost time (s)	21.0
Intersection Capacity Utilization	57.2%	ICU Level of Service	B
Analysis Period (min)	15		
c Critical Lane Group			

Movement	EBL	EBT	WBT	WBR	SBL	SBR
Lane Configurations						
Volume (veh/h)	149	472	558	9	20	100
Sign Control		Free	Free		Stop	
Grade		0%	0%		0%	
Peak Hour Factor	0.94	0.94	0.94	0.94	0.94	0.94
Hourly flow rate (vph)	159	502	594	10	21	106
Pedestrians						
Lane Width (ft)						
Walking Speed (ft/s)						
Percent Blockage						
Right turn flare (veh)						
Median type		None	None			
Median storage veh)						
Upstream signal (ft)		611				
pX, platoon unblocked					0.83	
vC, conflicting volume	603				1418	598
vC1, stage 1 conf vol						
vC2, stage 2 conf vol						
vCu, unblocked vol	603				1401	598
tC, single (s)	4.1				6.4	6.2
tC, 2 stage (s)						
tF (s)	2.2				3.5	3.3
p0 queue free %	84				80	79
cM capacity (veh/h)	974				108	502

Direction, Lane #	EB 1	EB 2	WB 1	SB 1
Volume Total	159	502	603	128
Volume Left	159	0	0	21
Volume Right	0	0	10	106
cSH	974	1700	1700	312
Volume to Capacity	0.16	0.30	0.35	0.41
Queue Length 95th (ft)	14	0	0	48
Control Delay (s)	9.4	0.0	0.0	24.3
Lane LOS	A			C
Approach Delay (s)	2.3		0.0	24.3
Approach LOS				C

Intersection Summary			
Average Delay	3.3		
Intersection Capacity Utilization	55.4%	ICU Level of Service	B
Analysis Period (min)	15		

Lane Group	EBL	EBT	WBL	WBT	NBL	NBT	SBL	SBT
Lane Group Flow (vph)	319	491	276	567	144	1889	219	2195
v/c Ratio	0.97	0.75	0.96	0.95	0.92	0.92	0.94	0.97
Control Delay	98.7	58.7	100.0	82.7	84.9	47.5	82.6	50.4
Queue Delay	0.0	0.0	0.0	0.0	0.0	0.0	0.0	0.0
Total Delay	98.7	58.7	100.0	82.7	84.9	47.5	82.6	50.4
Queue Length 50th (ft)	292	212	276	282	79	589	147	699
Queue Length 95th (ft)	#485	277	#478	#405	#217	661	#311	#824
Internal Link Dist (ft)		364		1915		469		768
Turn Bay Length (ft)			286		160		130	
Base Capacity (vph)	329	656	288	597	156	2054	232	2262
Starvation Cap Reductn	0	0	0	0	0	0	0	0
Spillback Cap Reductn	0	0	0	0	0	0	0	0
Storage Cap Reductn	0	0	0	0	0	0	0	0
Reduced v/c Ratio	0.97	0.75	0.96	0.95	0.92	0.92	0.94	0.97

Intersection Summary

95th percentile volume exceeds capacity, queue may be longer.
Queue shown is maximum after two cycles.

Movement	EBL	EBT	EBR	WBL	WBT	WBR	NBL	NBT	NBR	SBL	SBT	SBR
Lane Configurations												
Volume (vph)	300	346	116	376	398	19	135	1644	132	206	1823	241
Ideal Flow (vphpl)	1900	1900	1900	1900	1900	1900	1900	1900	1900	1900	1900	1900
Total Lost time (s)	5.0	5.0		5.0	5.0		3.0	5.0		3.0	5.0	
Lane Util. Factor	1.00	0.95		0.91	0.91		1.00	0.91		1.00	0.91	
Frt	1.00	0.96		1.00	0.99		1.00	0.99		1.00	0.98	
Flt Protected	0.95	1.00		0.95	0.99		0.95	1.00		0.95	1.00	
Satd. Flow (prot)	1770	3406		1610	3336		1770	5029		1770	4996	
Flt Permitted	0.95	1.00		0.95	0.99		0.07	1.00		0.07	1.00	
Satd. Flow (perm)	1770	3406		1610	3336		131	5029		124	4996	
Peak-hour factor, PHF	0.94	0.94	0.94	0.94	0.94	0.94	0.94	0.94	0.94	0.94	0.94	0.94
Adj. Flow (vph)	319	368	123	400	423	20	144	1749	140	219	1939	256
RTOR Reduction (vph)	0	24	0	0	2	0	0	7	0	0	12	0
Lane Group Flow (vph)	319	467	0	276	565	0	144	1882	0	219	2183	0
Turn Type	Split	NA		Split	NA		pm+pt	NA		pm+pt	NA	
Protected Phases	4	4		8	8		5	2		1	6	
Permitted Phases							2			6		
Actuated Green, G (s)	26.0	26.0		25.0	25.0		65.0	57.0		74.0	63.0	
Effective Green, g (s)	26.0	26.0		25.0	25.0		65.0	57.0		74.0	63.0	
Actuated g/C Ratio	0.19	0.19		0.18	0.18		0.46	0.41		0.53	0.45	
Clearance Time (s)	5.0	5.0		5.0	5.0		3.0	5.0		3.0	5.0	
Vehicle Extension (s)	3.0	3.0		3.0	3.0		3.0	3.0		3.0	3.0	
Lane Grp Cap (vph)	329	633		288	596		154	2048		230	2248	
v/s Ratio Prot	c0.18	0.14		c0.17	0.17		0.05	0.37		c0.10	c0.44	
v/s Ratio Perm							0.38			0.41		
v/c Ratio	0.97	0.74		0.96	0.95		0.94	0.92		0.95	0.97	
Uniform Delay, d1	56.6	53.8		57.0	56.9		35.5	39.3		43.7	37.6	
Progression Factor	1.00	1.00		1.00	1.00		1.00	1.00		1.00	1.00	
Incremental Delay, d2	40.9	4.5		41.3	24.5		53.1	8.2		45.8	12.9	
Delay (s)	97.5	58.3		98.3	81.3		88.5	47.5		89.5	50.5	
Level of Service	F	E		F	F		F	D		F	D	
Approach Delay (s)		73.7			86.9			50.4			54.0	
Approach LOS		E			F			D			D	

Intersection Summary			
HCM Average Control Delay	60.0	HCM Level of Service	E
HCM Volume to Capacity ratio	0.95		
Actuated Cycle Length (s)	140.0	Sum of lost time (s)	13.0
Intersection Capacity Utilization	95.5%	ICU Level of Service	F
Analysis Period (min)	15		
c Critical Lane Group			

Movement	EBL	EBT	EBR	WBL	WBT	WBR	NBL	NBT	NBR	SBL	SBT	SBR
Lane Configurations												
Volume (vph)	300	346	116	376	398	19	135	1644	132	206	1823	241
Movement Number	7	4	14	3	8	18	5	2	12	1	6	16
Initial Queue, veh	0	0	0	0	0	0	0	0	0	0	0	0
Ped-Bike Adj. Factor (A_pbT)	1.00		1.00	1.00		1.00	1.00		1.00	1.00		1.00
Parking, Bus Adj. Factors	1.00	1.00	1.00	1.00	1.00	1.00	1.00	1.00	1.00	1.00	1.00	1.00
Adj. Sat. Flow Rate, veh/h/ln	1863	1863	1863	1863	1863	1863	1863	1863	1863	1863	1863	1863
Lanes	1	2	0	1	2	0	1	3	0	1	3	0
Lane Assignment												
Capacity, veh/h	330	499	165	317	631	30	159	1961	157	242	2045	267
Proportion Arriving On Green	0.19	0.19	0.19	0.18	0.18	0.18	0.06	0.41	0.41	0.10	0.45	0.45
Movement Delay, s/veh	97.2	61.4	63.3	197.8	58.7	58.9	78.8	47.4	54.1	74.6	49.1	59.5
Movement LOS	F	E	E	F	E	E	E	D	D	E	D	E
Approach Volume, veh/h		811			844			2033			2415	
Approach Delay, s/veh		76.0			124.7			51.8			54.7	
Approach LOS		E			F			D			D	

Timer:	1	2	3	4	5	6	7	8
Assigned Phase	1	2	8	4	5	6		
Case No	1.1	4.0	10.0	10.0	1.1	4.0		
Phase Duration (G+Y+Rc), s	16.70	62.12	30.00	31.00	11.00	67.81		
Change Period (Y+Rc), s	3.00	5.00	5.00	5.00	3.00	5.00		
Max. Allowable Headway (MAH), s	4.00	3.94	3.96	3.99	4.00	3.94		
Maximum Green Setting (Gmax), s	14.00	57.00	25.00	26.00	8.00	63.00		
Max. Queue Clearance Time (g_c+I1), s	13.68	49.56	27.00	26.97	8.70	60.23		
Green Extension Time (g_e), s	0.02	6.99	0.00	0.00	0.00	2.58		
Probability of Phase Call (p_c)	1.000	1.000	1.000	1.000	0.996	1.000		
Probability of Max Out (p_x)	1.000	0.971	1.000	1.000	1.000	1.000		

Left-Turn Movement Data					
Assigned Movement	1		3	7	5
Mvmt. Sat Flow, veh/h	1774.04		1774.04	1774.04	1774.04

Through Movement Data					
Assigned Movement		2	8	4	6
Mvmt. Sat Flow, veh/h		4800.49	3527.85	2682.54	4552.47

Right-Turn Movement Data					
Assigned Movement		12	18	14	16
Mvmt. Sat Flow, veh/h		384.58	168.00	886.51	595.40

Left Lane Group Data								
Assigned Movement	1	0	3	7	5	0	0	0
Lane Assignment	L (Pr/Pm)		L	LL (Pr/Pm)				
Lanes in Group	1	0	1	1	1	0	0	0
Group Volume (v), veh/h	219.1	0.0	400.0	319.1	143.6	0.0	0.0	0.0
Group Sat. Flow (s), veh/h/ln	1774.0	0.0	1774.0	1774.0	1774.0	0.0	0.0	0.0
Queue Serve Time (g_s), s	11.7	0.0	25.0	25.0	6.7	0.0	0.0	0.0
Cycle Queue Clear Time (g_c), s	11.7	0.0	25.0	25.0	6.7	0.0	0.0	0.0

Perm LT Sat Flow Rate (s_l), veh/h/ln	238.9	0.0	1774.0	1774.0	176.8	0.0	0.0	0.0
Shared LT Sat Flow (s_sh), veh/h/ln	0.0	0.0	0.0	0.0	0.0	0.0	0.0	0.0
Perm LT Eff. Green (g_p), s	64.8	0.0	0.0	0.0	57.1	0.0	0.0	0.0
Perm LT Serve Time (g_u), s	9.6	0.0	0.0	0.0	4.6	0.0	0.0	0.0
Perm LT Que Serve Time (g_ps), s	9.6	0.0	0.0	0.0	4.6	0.0	0.0	0.0
Time to First Blk (g_f), s	0.0	0.0	0.0	0.0	0.0	0.0	0.0	0.0
Serve Time pre Blk (g_fs), s	0.0	0.0	0.0	0.0	0.0	0.0	0.0	0.0
Proportion LT Inside Lane (P_L)	1.000	0.000	1.000	1.000	1.000	0.000	0.000	0.000
Lane Group Capacity (c), veh/h	241.6	0.0	317.2	329.9	158.8	0.0	0.0	0.0
Volume-to-Capacity Ratio (X)	0.907	0.000	1.261	0.967	0.904	0.000	0.000	0.000
Available Capacity (c_a), veh/h	245.5	0.0	317.2	329.9	158.8	0.0	0.0	0.0
Upstream Filter Factor (I)	1.000	0.000	1.000	1.000	1.000	0.000	0.000	0.000
Uniform Delay (d1), s/veh	41.0	0.0	57.4	56.5	34.1	0.0	0.0	0.0
Incremental Delay (d2), s/veh	33.5	0.0	140.4	40.7	44.7	0.0	0.0	0.0
Initial Queue Delay (d3), s/veh	0.0	0.0	0.0	0.0	0.0	0.0	0.0	0.0
Control Delay (d), s/veh	74.6	0.0	197.8	97.2	78.8	0.0	0.0	0.0
First-Term Queue (Q1), veh/ln	5.0	0.0	11.2	11.2	2.8	0.0	0.0	0.0
Second-Term Queue (Q2), veh/ln	2.3	0.0	12.4	3.7	2.0	0.0	0.0	0.0
Third-Term Queue (Q3), veh/ln	0.0	0.0	0.0	0.0	0.0	0.0	0.0	0.0
Percentile bk-of-que factor (f_B%)	1.000	0.000	1.000	1.000	1.000	0.000	0.000	0.000
Percentile Back of Queue (Q%), veh/ln	7.3	0.0	23.6	14.9	4.8	0.0	0.0	0.0
Percentile Storage Ratio (RQ%)	1.42	0.00	2.09	1.10	0.77	0.00	0.00	0.00
Initial Queue (Qb), veh	0.0	0.0	0.0	0.0	0.0	0.0	0.0	0.0
Final (Residual) Queue (Qe), veh	0.0	0.0	20.7	0.0	0.0	0.0	0.0	0.0
Saturated Delay (ds), s/veh	0.0	0.0	0.0	0.0	0.0	0.0	0.0	0.0
Saturated Queue (Qs), veh	0.0	0.0	0.0	0.0	0.0	0.0	0.0	0.0
Saturated Capacity (cs), veh/h	0.0	0.0	0.0	0.0	0.0	0.0	0.0	0.0
Initial Queue Clear Time (tc), h	0.0	0.0	0.3	0.0	0.0	0.0	0.0	0.0
Middle Lane Group Data								
Assigned Movement	0	2	8	4	0	6	0	0
Lane Assignment		T	T	T		T		
Lanes in Group	0	2	1	1	0	2	0	0
Group Volume (v), veh/h	0.0	1234.0	223.1	254.0	0.0	1438.9	0.0	0.0
Group Sat. Flow (s), veh/h/ln	0.0	1695.1	1862.7	1862.7	0.0	1695.1	0.0	0.0
Queue Serve Time (g_s), s	0.0	47.3	15.6	18.0	0.0	56.8	0.0	0.0
Cycle Queue Clear Time (g_c), s	0.0	47.3	15.6	18.0	0.0	56.8	0.0	0.0
Lane Group Capacity (c), veh/h	0.0	1384.9	333.1	346.4	0.0	1523.1	0.0	0.0
Volume-to-Capacity Ratio (X)	0.000	0.891	0.670	0.733	0.000	0.945	0.000	0.000
Available Capacity (c_a), veh/h	0.0	1384.9	333.1	346.4	0.0	1527.6	0.0	0.0
Upstream Filter Factor (I)	0.000	1.000	1.000	1.000	0.000	1.000	0.000	0.000
Uniform Delay (d1), s/veh	0.0	38.5	53.6	53.6	0.0	36.8	0.0	0.0
Incremental Delay (d2), s/veh	0.0	9.0	5.1	7.8	0.0	12.3	0.0	0.0
Initial Queue Delay (d3), s/veh	0.0	0.0	0.0	0.0	0.0	0.0	0.0	0.0
Control Delay (d), s/veh	0.0	47.4	58.7	61.4	0.0	49.1	0.0	0.0
First-Term Queue (Q1), veh/ln	0.0	19.5	7.4	8.4	0.0	23.1	0.0	0.0
Second-Term Queue (Q2), veh/ln	0.0	1.7	0.5	0.8	0.0	2.6	0.0	0.0
Third-Term Queue (Q3), veh/ln	0.0	0.0	0.0	0.0	0.0	0.0	0.0	0.0
Percentile bk-of-que factor (f_B%)	0.000	1.000	1.000	1.000	0.000	1.000	0.000	0.000
Percentile Back of Queue (Q%), veh/ln	0.0	21.2	7.8	9.2	0.0	25.7	0.0	0.0
Percentile Storage Ratio (RQ%)	0.00	1.18	0.11	0.68	0.00	0.89	0.00	0.00

Initial Queue (Qb), veh	0.0	0.0	0.0	0.0	0.0	0.0	0.0	0.0
Final (Residual) Queue (Qe), veh	0.0	0.0	0.0	0.0	0.0	0.0	0.0	0.0
Saturated Delay (ds), s/veh	0.0	0.0	0.0	0.0	0.0	0.0	0.0	0.0
Saturated Queue (Qs), veh	0.0	0.0	0.0	0.0	0.0	0.0	0.0	0.0
Saturated Capacity (cs), veh/h	0.0	0.0	0.0	0.0	0.0	0.0	0.0	0.0
Initial Queue Clear Time (tc), h	0.0	0.0	0.0	0.0	0.0	0.0	0.0	0.0

Right Lane Group Data								
Assigned Movement	0	12	18	14	0	16	0	0
Lane Assignment		T+R	T+R	T+R		T+R		
Lanes in Group	0	1	1	1	0	1	0	0
Group Volume (v), veh/h	0.0	655.4	220.6	237.5	0.0	756.9	0.0	0.0
Group Sat. Flow (s), veh/h/ln	0.0	1794.9	1833.1	1706.3	0.0	1757.7	0.0	0.0
Queue Serve Time (g_s), s	0.0	47.6	15.7	18.4	0.0	58.2	0.0	0.0
Cycle Queue Clear Time (g_c), s	0.0	47.6	15.7	18.4	0.0	58.2	0.0	0.0
Prot RT Sat Flow Rate (s_R), veh/h/ln	0.0	0.0	0.0	0.0	0.0	0.0	0.0	0.0
Prot RT Eff. Green (g_R), s	0.0	0.0	0.0	0.0	0.0	0.0	0.0	0.0
Proportion RT Outside Lane (P_R)	0.000	0.214	0.092	0.520	0.000	0.339	0.000	0.000
Lane Group Capacity (c), veh/h	0.0	733.2	327.8	317.3	0.0	789.7	0.0	0.0
Volume-to-Capacity Ratio (X)	0.000	0.894	0.673	0.749	0.000	0.958	0.000	0.000
Available Capacity (c_a), veh/h	0.0	733.2	327.8	317.3	0.0	792.0	0.0	0.0
Upstream Filter Factor (I)	0.000	1.000	1.000	1.000	0.000	1.000	0.000	0.000
Uniform Delay (d1), s/veh	0.0	38.5	53.6	53.8	0.0	37.2	0.0	0.0
Incremental Delay (d2), s/veh	0.0	15.6	5.3	9.4	0.0	22.3	0.0	0.0
Initial Queue Delay (d3), s/veh	0.0	0.0	0.0	0.0	0.0	0.0	0.0	0.0
Control Delay (d), s/veh	0.0	54.1	58.9	63.3	0.0	59.5	0.0	0.0
First-Term Queue (Q1), veh/ln	0.0	20.7	7.3	7.9	0.0	24.6	0.0	0.0
Second-Term Queue (Q2), veh/ln	0.0	3.2	0.5	0.8	0.0	4.9	0.0	0.0
Third-Term Queue (Q3), veh/ln	0.0	0.0	0.0	0.0	0.0	0.0	0.0	0.0
Percentile bk-of-que factor (f_B%)	0.000	1.000	1.000	1.000	0.000	1.000	0.000	0.000
Percentile Back of Queue (Q%), veh/ln	0.0	23.9	7.8	8.8	0.0	29.5	0.0	0.0
Percentile Storage Ratio (RQ%)	0.00	1.33	0.11	0.64	0.00	1.02	0.00	0.00
Initial Queue (Qb), veh	0.0	0.0	0.0	0.0	0.0	0.0	0.0	0.0
Final (Residual) Queue (Qe), veh	0.0	0.0	0.0	0.0	0.0	0.0	0.0	0.0
Saturated Delay (ds), s/veh	0.0	0.0	0.0	0.0	0.0	0.0	0.0	0.0
Saturated Queue (Qs), veh	0.0	0.0	0.0	0.0	0.0	0.0	0.0	0.0
Saturated Capacity (cs), veh/h	0.0	0.0	0.0	0.0	0.0	0.0	0.0	0.0
Initial Queue Clear Time (tc), h	0.0	0.0	0.0	0.0	0.0	0.0	0.0	0.0

Intersection Summary	
HCM Average Control Delay	66.2
HCM Level of Service	E

Movement	EBL	EBT	EBR	WBL	WBT	WBR	NEL	NET	NER	SWL	SWT	SWR
Lane Configurations												
Volume (veh/h)	39	6	0	0	5	13	68	2183	22	0	0	0
Sign Control		Stop			Stop			Free			Free	
Grade		0%			0%			0%			0%	
Peak Hour Factor	0.95	0.95	0.95	0.95	0.95	0.95	0.95	0.95	0.95	0.95	0.95	0.95
Hourly flow rate (vph)	41	6	0	0	5	14	72	2298	23	0	0	0
Pedestrians												
Lane Width (ft)												
Walking Speed (ft/s)												
Percent Blockage												
Right turn flare (veh)												
Median type								None			None	
Median storage veh)												
Upstream signal (ft)												
pX, platoon unblocked												
vC, conflicting volume	925	2464	0	2456	2453	778	0			2321		
vC1, stage 1 conf vol												
vC2, stage 2 conf vol												
vCu, unblocked vol	925	2464	0	2456	2453	778	0			2321		
tC, single (s)	7.5	6.5	6.9	7.5	6.5	6.9	4.1			4.1		
tC, 2 stage (s)												
tF (s)	3.5	4.0	3.3	3.5	4.0	3.3	2.2			2.2		
p0 queue free %	77	78	100	100	82	96	96			100		
cM capacity (veh/h)	179	29	1084	13	29	339	1622			211		

Direction, Lane #	EB 1	WB 1	NE 1	NE 2	NE 3
Volume Total	47	19	646	1149	598
Volume Left	41	0	72	0	0
Volume Right	0	14	0	0	23
cSH	105	86	1622	1700	1700
Volume to Capacity	0.45	0.22	0.04	0.68	0.35
Queue Length 95th (ft)	48	19	3	0	0
Control Delay (s)	64.6	58.6	1.2	0.0	0.0
Lane LOS	F	F	A		
Approach Delay (s)	64.6	58.6	0.3		
Approach LOS	F	F			

Intersection Summary			
Average Delay	2.0		
Intersection Capacity Utilization	59.9%	ICU Level of Service	B
Analysis Period (min)	15		

Movement	EBL	EBT	EBR	WBL	WBT	WBR	NEL	NET	NER	SWL	SWT	SWR
Lane Configurations												
Volume (veh/h)	0	5	0	0	5	0	2	2384	5	0	0	0
Sign Control		Stop			Stop			Free			Free	
Grade		0%			0%			0%			0%	
Peak Hour Factor	0.89	0.89	0.89	0.89	0.89	0.89	0.89	0.89	0.89	0.89	0.89	0.89
Hourly flow rate (vph)	0	6	0	0	6	0	2	2679	6	0	0	0
Pedestrians												
Lane Width (ft)												
Walking Speed (ft/s)												
Percent Blockage												
Right turn flare (veh)												
Median type								None			None	
Median storage veh)												
Upstream signal (ft)												
pX, platoon unblocked												
vC, conflicting volume	900	2689	0	2689	2686	896	0			2684		
vC1, stage 1 conf vol												
vC2, stage 2 conf vol												
vCu, unblocked vol	900	2689	0	2689	2686	896	0			2684		
tC, single (s)	7.5	6.5	6.9	7.5	6.5	6.9	4.1			4.1		
tC, 2 stage (s)												
tF (s)	3.5	4.0	3.3	3.5	4.0	3.3	2.2			2.2		
p0 queue free %	100	74	100	100	74	100	100			100		
cM capacity (veh/h)	186	21	1084	8	21	283	1622			151		

Direction, Lane #	EB 1	WB 1	NE 1	NE 2	NE 3
Volume Total	6	6	672	1339	675
Volume Left	0	0	2	0	0
Volume Right	0	0	0	0	6
cSH	21	21	1622	1700	1700
Volume to Capacity	0.26	0.26	0.00	0.79	0.40
Queue Length 95th (ft)	19	19	0	0	0
Control Delay (s)	225.5	224.3	0.0	0.0	0.0
Lane LOS	F	F	A		
Approach Delay (s)	225.5	224.3	0.0		
Approach LOS	F	F			

Intersection Summary			
Average Delay	0.9		
Intersection Capacity Utilization	56.2%	ICU Level of Service	B
Analysis Period (min)	15		

Movement	EBL	EBR	NBL	NBT	SBT	SBR
Lane Configurations						
Volume (veh/h)	1	2	1	180	124	0
Sign Control	Stop			Free	Free	
Grade	0%			0%	0%	
Peak Hour Factor	0.92	0.92	0.92	0.92	0.92	0.92
Hourly flow rate (vph)	1	2	1	196	135	0
Pedestrians						
Lane Width (ft)						
Walking Speed (ft/s)						
Percent Blockage						
Right turn flare (veh)						
Median type				None	None	
Median storage veh)						
Upstream signal (ft)						
pX, platoon unblocked						
vC, conflicting volume	333	135	135			
vC1, stage 1 conf vol						
vC2, stage 2 conf vol						
vCu, unblocked vol	333	135	135			
tC, single (s)	6.4	6.2	4.1			
tC, 2 stage (s)						
tF (s)	3.5	3.3	2.2			
p0 queue free %	100	100	100			
cM capacity (veh/h)	662	914	1450			

Direction, Lane #	EB 1	NB 1	SB 1
Volume Total	3	197	135
Volume Left	1	1	0
Volume Right	2	0	0
cSH	811	1450	1700
Volume to Capacity	0.00	0.00	0.08
Queue Length 95th (ft)	0	0	0
Control Delay (s)	9.5	0.0	0.0
Lane LOS	A	A	
Approach Delay (s)	9.5	0.0	0.0
Approach LOS	A		

Intersection Summary			
Average Delay	0.1		
Intersection Capacity Utilization	20.3%	ICU Level of Service	A
Analysis Period (min)	15		

Movement	EBL	EBR	NBL	NBT	SBT	SBR
Lane Configurations						
Volume (veh/h)	1	1	1	182	124	1
Sign Control	Stop			Free	Free	
Grade	0%			0%	0%	
Peak Hour Factor	0.92	0.92	0.92	0.92	0.92	0.92
Hourly flow rate (vph)	1	1	1	198	135	1
Pedestrians						
Lane Width (ft)						
Walking Speed (ft/s)						
Percent Blockage						
Right turn flare (veh)						
Median type				None	None	
Median storage veh)						
Upstream signal (ft)						
pX, platoon unblocked						
vC, conflicting volume	335	135	136			
vC1, stage 1 conf vol						
vC2, stage 2 conf vol						
vCu, unblocked vol	335	135	136			
tC, single (s)	6.4	6.2	4.1			
tC, 2 stage (s)						
tF (s)	3.5	3.3	2.2			
p0 queue free %	100	100	100			
cM capacity (veh/h)	659	913	1448			

Direction, Lane #	EB 1	NB 1	SB 1
Volume Total	2	199	136
Volume Left	1	1	0
Volume Right	1	0	1
cSH	766	1448	1700
Volume to Capacity	0.00	0.00	0.08
Queue Length 95th (ft)	0	0	0
Control Delay (s)	9.7	0.0	0.0
Lane LOS	A	A	
Approach Delay (s)	9.7	0.0	0.0
Approach LOS	A		

Intersection Summary			
Average Delay	0.1		
Intersection Capacity Utilization	20.4%	ICU Level of Service	A
Analysis Period (min)	15		

Movement	EBL	EBR	NBL	NBT	SBT	SBR
Lane Configurations						
Volume (veh/h)	2	3	3	178	113	1
Sign Control	Stop			Free	Free	
Grade	0%			0%	0%	
Peak Hour Factor	0.92	0.92	0.92	0.92	0.92	0.92
Hourly flow rate (vph)	2	3	3	193	123	1
Pedestrians						
Lane Width (ft)						
Walking Speed (ft/s)						
Percent Blockage						
Right turn flare (veh)						
Median type				None	None	
Median storage veh)						
Upstream signal (ft)						
pX, platoon unblocked						
vC, conflicting volume	323	123	124			
vC1, stage 1 conf vol						
vC2, stage 2 conf vol						
vCu, unblocked vol	323	123	124			
tC, single (s)	6.4	6.2	4.1			
tC, 2 stage (s)						
tF (s)	3.5	3.3	2.2			
p0 queue free %	100	100	100			
cM capacity (veh/h)	669	927	1463			

Direction, Lane #	EB 1	NB 1	SB 1
Volume Total	5	197	124
Volume Left	2	3	0
Volume Right	3	0	1
cSH	803	1463	1700
Volume to Capacity	0.01	0.00	0.07
Queue Length 95th (ft)	1	0	0
Control Delay (s)	9.5	0.1	0.0
Lane LOS	A	A	
Approach Delay (s)	9.5	0.1	0.0
Approach LOS	A		

Intersection Summary			
Average Delay	0.2		
Intersection Capacity Utilization	21.8%	ICU Level of Service	A
Analysis Period (min)	15		

Movement	EBL	EBR	NBL	NBT	SBT	SBR
Lane Configurations						
Volume (veh/h)	19	23	7	157	80	14
Sign Control	Stop			Free	Free	
Grade	0%			0%	0%	
Peak Hour Factor	0.92	0.92	0.92	0.92	0.92	0.92
Hourly flow rate (vph)	21	25	8	171	87	15
Pedestrians						
Lane Width (ft)						
Walking Speed (ft/s)						
Percent Blockage						
Right turn flare (veh)						
Median type				None	None	
Median storage veh)						
Upstream signal (ft)						
pX, platoon unblocked						
vC, conflicting volume	280	95	102			
vC1, stage 1 conf vol						
vC2, stage 2 conf vol						
vCu, unblocked vol	280	95	102			
tC, single (s)	6.4	6.2	4.1			
tC, 2 stage (s)						
tF (s)	3.5	3.3	2.2			
p0 queue free %	97	97	99			
cM capacity (veh/h)	706	962	1490			

Direction, Lane #	EB 1	NB 1	SB 1
Volume Total	46	178	102
Volume Left	21	8	0
Volume Right	25	0	15
cSH	826	1490	1700
Volume to Capacity	0.06	0.01	0.06
Queue Length 95th (ft)	4	0	0
Control Delay (s)	9.6	0.4	0.0
Lane LOS	A	A	
Approach Delay (s)	9.6	0.4	0.0
Approach LOS	A		

Intersection Summary			
Average Delay	1.5		
Intersection Capacity Utilization	23.9%	ICU Level of Service	A
Analysis Period (min)	15		

Movement	EBL	EBT	EBR	WBL	WBT	WBR	NBL	NBT	NBR	SBL	SBT	SBR
Lane Configurations												
Sign Control		Stop			Stop			Stop			Stop	
Volume (vph)	4	110	35	32	115	3	26	134	14	3	4	5
Peak Hour Factor	0.92	0.92	0.92	0.92	0.92	0.92	0.92	0.92	0.92	0.92	0.92	0.92
Hourly flow rate (vph)	4	120	38	35	125	3	28	146	15	3	4	5

Direction, Lane #	EB 1	WB 1	NB 1	SB 1
Volume Total (vph)	162	163	189	13
Volume Left (vph)	4	35	28	3
Volume Right (vph)	38	3	15	5
Hadj (s)	-0.10	0.06	0.02	-0.17
Departure Headway (s)	4.5	4.7	4.7	4.8
Degree Utilization, x	0.20	0.21	0.25	0.02
Capacity (veh/h)	761	730	721	682
Control Delay (s)	8.6	8.9	9.2	7.8
Approach Delay (s)	8.6	8.9	9.2	7.8
Approach LOS	A	A	A	A

Intersection Summary			
Delay	8.9		
HCM Level of Service	A		
Intersection Capacity Utilization	37.1%	ICU Level of Service	A
Analysis Period (min)	15		

HCM Unsignalized Intersection Capacity Analysis
1: SW 97th Ave. & SW 174th St.

2/11/2015

Movement	EBL	EBT	EBR	WBL	WBT	WBR	NBL	NBT	NBR	SBL	SBT	SBR
Lane Configurations												
Sign Control		Stop			Stop			Stop			Stop	
Volume (vph)	3	145	43	35	159	0	33	11	14	2	1	4
Peak Hour Factor	0.90	0.90	0.90	0.90	0.90	0.90	0.90	0.90	0.90	0.90	0.90	0.90
Hourly flow rate (vph)	3	161	48	39	177	0	37	12	16	2	1	4

Direction, Lane #	EB 1	WB 1	NB 1	SB 1
Volume Total (vph)	212	216	64	8
Volume Left (vph)	3	39	37	2
Volume Right (vph)	48	0	16	4
Hadj (s)	-0.10	0.07	0.00	-0.25
Departure Headway (s)	4.2	4.4	4.9	4.7
Degree Utilization, x	0.25	0.26	0.09	0.01
Capacity (veh/h)	831	795	680	686
Control Delay (s)	8.6	8.9	8.3	7.7
Approach Delay (s)	8.6	8.9	8.3	7.7
Approach LOS	A	A	A	A

Intersection Summary			
Delay	8.7		
HCM Level of Service	A		
Intersection Capacity Utilization	36.8%	ICU Level of Service	A
Analysis Period (min)	15		

Lane Group	EBL	NBT	SBT	NET
Lane Group Flow (vph)	143	181	56	2618
v/c Ratio	0.76	0.51	0.24	0.77
Control Delay	101.5	18.1	75.2	23.4
Queue Delay	0.0	0.0	0.0	0.0
Total Delay	101.5	18.1	75.2	23.4
Queue Length 50th (ft)	168	18	61	746
Queue Length 95th (ft)	252	103	116	912
Internal Link Dist (ft)	257	1041	665	1300
Turn Bay Length (ft)				
Base Capacity (vph)	268	356	230	3383
Starvation Cap Reductn	0	0	0	0
Spillback Cap Reductn	0	0	0	0
Storage Cap Reductn	0	0	0	0
Reduced v/c Ratio	0.53	0.51	0.24	0.77

Intersection Summary

Movement	EBL	EBR	NBL	NBT	NBR	SBT	SBR	NEL2	NEL	NET	NER
Lane Configurations											
Volume (vph)	5	132	8	9	157	27	27	5	22	2439	47
Ideal Flow (vphpl)	1900	1900	1900	1900	1900	1900	1900	1900	1900	1900	1900
Total Lost time (s)	5.0			5.0		5.0				5.0	
Lane Util. Factor	1.00			1.00		1.00				0.91	
Frt	0.87			0.88		0.93				1.00	
Flt Protected	1.00			1.00		1.00				1.00	
Satd. Flow (prot)	1617			1631		1737				5068	
Flt Permitted	1.00			0.99		1.00				1.00	
Satd. Flow (perm)	1617			1616		1737				5068	
Peak-hour factor, PHF	0.96	0.96	0.96	0.96	0.96	0.96	0.96	0.96	0.96	0.96	0.96
Adj. Flow (vph)	5	138	8	9	164	28	28	5	23	2541	49
RTOR Reduction (vph)	0	0	0	142	0	0	0	0	0	1	0
Lane Group Flow (vph)	143	0	0	39	0	56	0	0	0	2617	0
Parking (#/hr)		0									
Turn Type	NA		Perm	NA		NA		Perm	Perm	NA	
Protected Phases	3			4		8				6	
Permitted Phases			4					6	6		
Actuated Green, G (s)	21.2			24.0		24.0				121.1	
Effective Green, g (s)	21.2			24.0		24.0				121.1	
Actuated g/C Ratio	0.12			0.13		0.13				0.67	
Clearance Time (s)	5.0			5.0		5.0				5.0	
Vehicle Extension (s)	3.0			3.0		3.0				3.0	
Lane Grp Cap (vph)	189			214		230				3385	
v/s Ratio Prot	c0.09					c0.03					
v/s Ratio Perm				0.02						0.52	
v/c Ratio	0.76			0.18		0.24				0.77	
Uniform Delay, d1	77.6			69.9		70.5				20.7	
Progression Factor	1.00			1.00		1.00				1.00	
Incremental Delay, d2	15.8			1.8		2.5				1.8	
Delay (s)	93.3			71.8		73.0				22.4	
Level of Service	F			E		E				C	
Approach Delay (s)	93.3			71.8		73.0				22.4	
Approach LOS	F			E		E				C	

Intersection Summary			
HCM Average Control Delay	29.8	HCM Level of Service	C
HCM Volume to Capacity ratio	0.69		
Actuated Cycle Length (s)	181.3	Sum of lost time (s)	15.0
Intersection Capacity Utilization	86.9%	ICU Level of Service	E
Analysis Period (min)	15		

c Critical Lane Group

Movement	EBL	EBR	NBL	NBT	SBT	SBR
Lane Configurations						
Volume (veh/h)	6	87	22	158	119	11
Sign Control	Stop			Free	Free	
Grade	0%			0%	0%	
Peak Hour Factor	0.92	0.92	0.92	0.92	0.92	0.92
Hourly flow rate (vph)	7	95	24	172	129	12
Pedestrians						
Lane Width (ft)						
Walking Speed (ft/s)						
Percent Blockage						
Right turn flare (veh)						
Median type				None	None	
Median storage veh)						
Upstream signal (ft)					1121	
pX, platoon unblocked						
vC, conflicting volume	355	135	141			
vC1, stage 1 conf vol						
vC2, stage 2 conf vol						
vCu, unblocked vol	355	135	141			
tC, single (s)	6.4	6.2	4.1			
tC, 2 stage (s)						
tF (s)	3.5	3.3	2.2			
p0 queue free %	99	90	98			
cM capacity (veh/h)	632	913	1442			

Direction, Lane #	EB 1	NB 1	SB 1
Volume Total	101	196	141
Volume Left	7	24	0
Volume Right	95	0	12
cSH	888	1442	1700
Volume to Capacity	0.11	0.02	0.08
Queue Length 95th (ft)	10	1	0
Control Delay (s)	9.6	1.0	0.0
Lane LOS	A	A	
Approach Delay (s)	9.6	1.0	0.0
Approach LOS	A		

Intersection Summary			
Average Delay	2.7		
Intersection Capacity Utilization	32.2%	ICU Level of Service	A
Analysis Period (min)	15		

Movement	WBL	WBR	NBT	NBR	SBL	SBT
Lane Configurations						
Volume (veh/h)	28	27	152	21	15	140
Sign Control	Stop		Free			Free
Grade	0%		0%			0%
Peak Hour Factor	0.94	0.94	0.94	0.94	0.94	0.94
Hourly flow rate (vph)	30	29	162	22	16	149
Pedestrians						
Lane Width (ft)						
Walking Speed (ft/s)						
Percent Blockage						
Right turn flare (veh)						
Median type			None			None
Median storage veh)						
Upstream signal (ft)						
pX, platoon unblocked						
vC, conflicting volume	354	173			184	
vC1, stage 1 conf vol						
vC2, stage 2 conf vol						
vCu, unblocked vol	354	173			184	
tC, single (s)	6.4	6.2			4.1	
tC, 2 stage (s)						
tF (s)	3.5	3.3			2.2	
p0 queue free %	95	97			99	
cM capacity (veh/h)	637	871			1391	

Direction, Lane #	WB 1	NB 1	SB 1
Volume Total	59	184	165
Volume Left	30	0	16
Volume Right	29	22	0
cSH	733	1700	1391
Volume to Capacity	0.08	0.11	0.01
Queue Length 95th (ft)	6	0	1
Control Delay (s)	10.3	0.0	0.8
Lane LOS	B		A
Approach Delay (s)	10.3	0.0	0.8
Approach LOS	B		

Intersection Summary			
Average Delay	1.8		
Intersection Capacity Utilization	29.9%	ICU Level of Service	A
Analysis Period (min)	15		

Movement	EBL	EBR	NBL	NBT	SBT	SBR
Lane Configurations						
Volume (veh/h)	6	54	16	183	173	5
Sign Control	Stop			Free	Free	
Grade	0%			0%	0%	
Peak Hour Factor	0.93	0.93	0.93	0.93	0.93	0.93
Hourly flow rate (vph)	6	58	17	197	186	5
Pedestrians						
Lane Width (ft)						
Walking Speed (ft/s)						
Percent Blockage						
Right turn flare (veh)						
Median type				None	None	
Median storage veh)						
Upstream signal (ft)				1230		
pX, platoon unblocked						
vC, conflicting volume	420	189	191			
vC1, stage 1 conf vol						
vC2, stage 2 conf vol						
vCu, unblocked vol	420	189	191			
tC, single (s)	6.4	6.2	4.1			
tC, 2 stage (s)						
tF (s)	3.5	3.3	2.2			
p0 queue free %	99	93	99			
cM capacity (veh/h)	583	853	1382			

Direction, Lane #	EB 1	NB 1	SB 1
Volume Total	65	214	191
Volume Left	6	17	0
Volume Right	58	0	5
cSH	815	1382	1700
Volume to Capacity	0.08	0.01	0.11
Queue Length 95th (ft)	6	1	0
Control Delay (s)	9.8	0.7	0.0
Lane LOS	A	A	
Approach Delay (s)	9.8	0.7	0.0
Approach LOS	A		

Intersection Summary			
Average Delay	1.7		
Intersection Capacity Utilization	33.2%	ICU Level of Service	A
Analysis Period (min)	15		

Movement	EBL	EBT	EBR	WBL	WBT	WBR	NBL	NBT	NBR	SBL	SBT	SBR
Lane Configurations												
Volume (veh/h)	6	5	30	4	1	7	4	193	2	2	207	8
Sign Control		Stop			Stop			Free			Free	
Grade		0%			0%			0%			0%	
Peak Hour Factor	0.87	0.87	0.87	0.87	0.87	0.87	0.87	0.87	0.87	0.87	0.87	0.87
Hourly flow rate (vph)	7	6	34	5	1	8	5	222	2	2	238	9
Pedestrians												
Lane Width (ft)												
Walking Speed (ft/s)												
Percent Blockage												
Right turn flare (veh)												
Median type								None			None	
Median storage veh)												
Upstream signal (ft)								904				
pX, platoon unblocked	0.95	0.95		0.95	0.95	0.95				0.95		
vC, conflicting volume	488	480	243	517	484	223	247			224		
vC1, stage 1 conf vol												
vC2, stage 2 conf vol												
vCu, unblocked vol	437	429	243	467	432	158	247			159		
tC, single (s)	7.1	6.5	6.2	7.1	6.5	6.2	4.1			4.1		
tC, 2 stage (s)												
tF (s)	3.5	4.0	3.3	3.5	4.0	3.3	2.2			2.2		
p0 queue free %	99	99	96	99	100	99	100			100		
cM capacity (veh/h)	497	491	796	455	489	844	1319			1351		

Direction, Lane #	EB 1	WB 1	NB 1	SB 1
Volume Total	47	14	229	249
Volume Left	7	5	5	2
Volume Right	34	8	2	9
cSH	684	627	1319	1351
Volume to Capacity	0.07	0.02	0.00	0.00
Queue Length 95th (ft)	6	2	0	0
Control Delay (s)	10.7	10.9	0.2	0.1
Lane LOS	B	B	A	A
Approach Delay (s)	10.7	10.9	0.2	0.1
Approach LOS	B	B		

Intersection Summary			
Average Delay	1.3		
Intersection Capacity Utilization	22.8%	ICU Level of Service	A
Analysis Period (min)	15		

Movement	EBL	EBT	EBR	WBL	WBT	WBR	NBL	NBT	NBR	SBL	SBT	SBR
Lane Configurations												
Volume (veh/h)	1	0	2	0	0	0	1	203	0	1	233	2
Sign Control		Stop			Stop			Free			Free	
Grade		0%			0%			0%			0%	
Peak Hour Factor	0.91	0.91	0.91	0.91	0.91	0.91	0.91	0.91	0.91	0.91	0.91	0.91
Hourly flow rate (vph)	1	0	2	0	0	0	1	223	0	1	256	2
Pedestrians												
Lane Width (ft)												
Walking Speed (ft/s)												
Percent Blockage												
Right turn flare (veh)												
Median type								None			None	
Median storage veh)												
Upstream signal (ft)								601				
pX, platoon unblocked	0.92	0.92		0.92	0.92	0.92				0.92		
vC, conflicting volume	485	485	257	487	486	223	258			223		
vC1, stage 1 conf vol												
vC2, stage 2 conf vol												
vCu, unblocked vol	395	395	257	397	396	110	258			110		
tC, single (s)	7.1	6.5	6.2	7.1	6.5	6.2	4.1			4.1		
tC, 2 stage (s)												
tF (s)	3.5	4.0	3.3	3.5	4.0	3.3	2.2			2.2		
p0 queue free %	100	100	100	100	100	100	100			100		
cM capacity (veh/h)	518	497	781	515	496	867	1306			1360		

Direction, Lane #	EB 1	WB 1	NB 1	SB 1
Volume Total	3	0	224	259
Volume Left	1	0	1	1
Volume Right	2	0	0	2
cSH	668	1700	1306	1360
Volume to Capacity	0.00	0.00	0.00	0.00
Queue Length 95th (ft)	0	0	0	0
Control Delay (s)	10.4	0.0	0.0	0.0
Lane LOS	B	A	A	A
Approach Delay (s)	10.4	0.0	0.0	0.0
Approach LOS	B	A		

Intersection Summary			
Average Delay	0.1		
Intersection Capacity Utilization	23.1%	ICU Level of Service	A
Analysis Period (min)	15		

Movement	EBL	EBT	EBR	WBL	WBT	WBR	NBL	NBT	NBR	SBL	SBT	SBR
Lane Configurations												
Volume (veh/h)	8	1	71	1	2	1	11	197	1	2	230	1
Sign Control		Stop			Stop			Free			Free	
Grade		0%			0%			0%			0%	
Peak Hour Factor	0.93	0.93	0.93	0.93	0.93	0.93	0.93	0.93	0.93	0.93	0.93	0.93
Hourly flow rate (vph)	9	1	76	1	2	1	12	212	1	2	247	1
Pedestrians												
Lane Width (ft)												
Walking Speed (ft/s)												
Percent Blockage												
Right turn flare (veh)												
Median type								None			None	
Median storage veh)												
Upstream signal (ft)								300				
pX, platoon unblocked	0.88	0.88		0.88	0.88	0.88				0.88		
vC, conflicting volume	490	489	248	565	489	212	248			213		
vC1, stage 1 conf vol												
vC2, stage 2 conf vol												
vCu, unblocked vol	356	355	248	441	355	42	248			42		
tC, single (s)	7.1	6.5	6.2	7.1	6.5	6.2	4.1			4.1		
tC, 2 stage (s)												
tF (s)	3.5	4.0	3.3	3.5	4.0	3.3	2.2			2.2		
p0 queue free %	98	100	90	100	100	100	99			100		
cM capacity (veh/h)	522	499	791	416	499	909	1317			1383		

Direction, Lane #	EB 1	WB 1	NB 1	SB 1
Volume Total	86	4	225	251
Volume Left	9	1	12	2
Volume Right	76	1	1	1
cSH	747	532	1317	1383
Volume to Capacity	0.12	0.01	0.01	0.00
Queue Length 95th (ft)	10	1	1	0
Control Delay (s)	10.4	11.8	0.5	0.1
Lane LOS	B	B	A	A
Approach Delay (s)	10.4	11.8	0.5	0.1
Approach LOS	B	B		

Intersection Summary			
Average Delay	1.9		
Intersection Capacity Utilization	29.7%	ICU Level of Service	A
Analysis Period (min)	15		

Lane Group	EBL	EBT	EBR	WBL	WBT	NBL	NBT	SBL	SBT
Lane Group Flow (vph)	45	554	203	493	662	172	474	20	313
v/c Ratio	0.07	0.88	0.37	0.86	0.52	0.52	0.71	0.07	0.58
Control Delay	10.7	66.4	23.3	44.4	42.9	51.0	51.0	44.3	65.9
Queue Delay	0.0	0.0	0.0	0.0	0.0	0.0	0.0	0.0	0.0
Total Delay	10.7	66.4	23.3	44.4	42.9	51.0	51.0	44.3	65.9
Queue Length 50th (ft)	17	519	77	357	306	147	178	16	163
Queue Length 95th (ft)	33	#802	163	508	399	233	256	41	230
Internal Link Dist (ft)		1915			531		229		156
Turn Bay Length (ft)	130			95		155		130	
Base Capacity (vph)	737	703	608	670	1424	331	705	282	583
Starvation Cap Reductn	0	0	0	0	0	0	0	0	0
Spillback Cap Reductn	0	0	0	0	0	0	0	0	0
Storage Cap Reductn	0	0	0	0	0	0	0	0	0
Reduced v/c Ratio	0.06	0.79	0.33	0.74	0.46	0.52	0.67	0.07	0.54

Intersection Summary

95th percentile volume exceeds capacity, queue may be longer.
Queue shown is maximum after two cycles.

Movement	EBL	EBT	EBR	WBL	WBT	WBR	NBL	NBT	NBR	SBL	SBT	SBR
Lane Configurations												
Volume (vph)	41	510	187	454	597	12	158	199	237	18	239	49
Ideal Flow (vphpl)	1900	1900	1900	1900	1900	1900	1900	1900	1900	1900	1900	1900
Total Lost time (s)	3.0	3.0	5.0	3.0	3.0		3.0	3.0		3.0	3.0	
Lane Util. Factor	1.00	1.00	1.00	1.00	0.95		1.00	0.95		1.00	0.95	
Frt	1.00	1.00	0.85	1.00	1.00		1.00	0.92		1.00	0.97	
Flt Protected	0.95	1.00	1.00	0.95	1.00		0.95	1.00		0.95	1.00	
Satd. Flow (prot)	1770	1863	1583	1770	3529		1770	3250		1770	3449	
Flt Permitted	0.28	1.00	1.00	0.17	1.00		0.41	1.00		0.35	1.00	
Satd. Flow (perm)	528	1863	1583	315	3529		759	3250		651	3449	
Peak-hour factor, PHF	0.92	0.92	0.92	0.92	0.92	0.92	0.92	0.92	0.92	0.92	0.92	0.92
Adj. Flow (vph)	45	554	203	493	649	13	172	216	258	20	260	53
RTOR Reduction (vph)	0	0	79	0	1	0	0	120	0	0	9	0
Lane Group Flow (vph)	45	554	124	493	661	0	172	354	0	20	304	0
Turn Type	pm+pt	NA	custom	pm+pt	NA		custom	NA		custom	NA	
Protected Phases	1 2	2 4		1 3	3 4		5 6	6 8		5 7	7 8	
Permitted Phases	2 4		4	3 4			8			8		
Actuated Green, G (s)	89.5	50.6	46.4	87.5	54.6		38.3	22.8		32.8	23.3	
Effective Green, g (s)	89.5	50.6	46.4	87.5	54.6		38.3	22.8		32.8	23.3	
Actuated g/C Ratio	0.57	0.32	0.29	0.55	0.35		0.24	0.14		0.21	0.15	
Clearance Time (s)			5.0									
Vehicle Extension (s)			3.0									
Lane Grp Cap (vph)	639	598	466	554	1222		317	470		243	510	
v/s Ratio Prot	0.02	c0.30		c0.23	0.19		c0.07	c0.11		0.01	c0.09	
v/s Ratio Perm	0.02		0.08	0.26			0.06			0.01		
v/c Ratio	0.07	0.93	0.27	0.89	0.54		0.54	0.75		0.08	0.60	
Uniform Delay, d1	15.8	51.8	42.6	37.5	41.5		50.2	64.8		50.1	62.8	
Progression Factor	1.00	1.00	1.00	1.00	1.00		1.00	1.00		1.00	1.00	
Incremental Delay, d2	0.0	20.4	0.3	16.0	0.5		1.9	6.7		0.1	1.9	
Delay (s)	15.8	72.2	42.9	53.6	42.0		52.1	71.5		50.2	64.7	
Level of Service	B	E	D	D	D		D	E		D	E	
Approach Delay (s)		61.6			46.9			66.3			63.8	
Approach LOS		E			D			E			E	

Intersection Summary			
HCM Average Control Delay	57.1	HCM Level of Service	E
HCM Volume to Capacity ratio	0.80		
Actuated Cycle Length (s)	157.7	Sum of lost time (s)	21.0
Intersection Capacity Utilization	82.6%	ICU Level of Service	E
Analysis Period (min)	15		
c Critical Lane Group			

Movement	EBL	EBT	WBT	WBR	SBL	SBR
Lane Configurations						
Volume (veh/h)	242	681	840	11	25	241
Sign Control		Free	Free		Stop	
Grade		0%	0%		0%	
Peak Hour Factor	0.96	0.96	0.96	0.96	0.96	0.96
Hourly flow rate (vph)	252	709	875	11	26	251
Pedestrians						
Lane Width (ft)						
Walking Speed (ft/s)						
Percent Blockage						
Right turn flare (veh)						
Median type		None	None			
Median storage veh)						
Upstream signal (ft)		611				
pX, platoon unblocked					0.74	
vC, conflicting volume	886				2094	881
vC1, stage 1 conf vol						
vC2, stage 2 conf vol						
vCu, unblocked vol	886				2303	881
tC, single (s)	4.1				6.4	6.2
tC, 2 stage (s)						
tF (s)	2.2				3.5	3.3
p0 queue free %	67				0	27
cM capacity (veh/h)	764				21	346

Direction, Lane #	EB 1	EB 2	WB 1	SB 1
Volume Total	252	709	886	277
Volume Left	252	0	0	26
Volume Right	0	0	11	251
cSH	764	1700	1700	141
Volume to Capacity	0.33	0.42	0.52	1.96
Queue Length 95th (ft)	36	0	0	544
Control Delay (s)	12.0	0.0	0.0	511.4
Lane LOS	B			F
Approach Delay (s)	3.2		0.0	511.4
Approach LOS				F

Intersection Summary			
Average Delay	68.1		
Intersection Capacity Utilization	84.6%	ICU Level of Service	E
Analysis Period (min)	15		

Lane Group	EBL	EBT	WBL	WBT	NBL	NBT	SBL	SBT
Lane Group Flow (vph)	237	579	257	529	92	1918	245	2583
v/c Ratio	0.79	0.97	0.94	0.93	0.88	0.88	0.91	0.97
Control Delay	94.6	107.1	116.4	100.7	98.0	53.8	95.0	55.1
Queue Delay	0.0	0.0	0.0	0.0	0.0	0.0	0.0	0.0
Total Delay	94.6	107.1	116.4	100.7	98.0	53.8	95.0	55.1
Queue Length 50th (ft)	289	381	352	361	65	804	251	1133
Queue Length 95th (ft)	#421	#515	#553	#475	#190	869	#414	#1211
Internal Link Dist (ft)		364		1915		469		768
Turn Bay Length (ft)			286		160		130	
Base Capacity (vph)	299	594	281	583	105	2178	283	2651
Starvation Cap Reductn	0	0	0	0	0	0	0	0
Spillback Cap Reductn	0	0	0	0	0	0	0	0
Storage Cap Reductn	0	0	0	0	0	0	0	0
Reduced v/c Ratio	0.79	0.97	0.91	0.91	0.88	0.88	0.87	0.97

Intersection Summary

95th percentile volume exceeds capacity, queue may be longer.
Queue shown is maximum after two cycles.

Movement	EBL	EBT	EBR	WBL	WBT	WBR	NBL	NBT	NBR	SBL	SBT	SBR
Lane Configurations												
Volume (vph)	218	474	59	358	352	13	85	1406	359	225	2107	270
Ideal Flow (vphpl)	1900	1900	1900	1900	1900	1900	1900	1900	1900	1900	1900	1900
Total Lost time (s)	5.0	5.0		5.0	5.0		3.0	5.0		3.0	5.0	
Lane Util. Factor	1.00	0.95		0.91	0.91		1.00	0.91		1.00	0.91	
Frt	1.00	0.98		1.00	1.00		1.00	0.97		1.00	0.98	
Flt Protected	0.95	1.00		0.95	0.99		0.95	1.00		0.95	1.00	
Satd. Flow (prot)	1770	3481		1610	3335		1770	4930		1770	4999	
Flt Permitted	0.95	1.00		0.95	0.99		0.05	1.00		0.05	1.00	
Satd. Flow (perm)	1770	3481		1610	3335		90	4930		87	4999	
Peak-hour factor, PHF	0.92	0.92	0.92	0.92	0.92	0.92	0.92	0.92	0.92	0.92	0.92	0.92
Adj. Flow (vph)	237	515	64	389	383	14	92	1528	390	245	2290	293
RTOR Reduction (vph)	0	5	0	0	1	0	0	23	0	0	8	0
Lane Group Flow (vph)	237	574	0	257	528	0	92	1895	0	245	2575	0
Turn Type	Split	NA		Split	NA		pm+pt	NA		pm+pt	NA	
Protected Phases	4	4		8	8		5	2		1	6	
Permitted Phases							2			6		
Actuated Green, G (s)	32.0	32.0		32.2	32.2		89.7	82.7		110.0	100.0	
Effective Green, g (s)	32.0	32.0		32.2	32.2		89.7	82.7		110.0	100.0	
Actuated g/C Ratio	0.17	0.17		0.17	0.17		0.47	0.44		0.58	0.53	
Clearance Time (s)	5.0	5.0		5.0	5.0		3.0	5.0		3.0	5.0	
Vehicle Extension (s)	3.0	3.0		3.0	3.0		3.0	3.0		3.0	3.0	
Lane Grp Cap (vph)	299	589		274	568		105	2155		267	2642	
v/s Ratio Prot	0.13	c0.16		c0.16	0.16		0.03	0.38		c0.12	c0.52	
v/s Ratio Perm							0.38			0.42		
v/c Ratio	0.79	0.97		0.94	0.93		0.88	0.88		0.92	0.97	
Uniform Delay, d1	75.4	78.2		77.5	77.4		45.3	48.7		65.2	43.4	
Progression Factor	1.00	1.00		1.00	1.00		1.00	1.00		1.00	1.00	
Incremental Delay, d2	13.4	30.5		37.6	21.7		50.4	5.5		33.7	12.1	
Delay (s)	88.8	108.6		115.1	99.1		95.7	54.2		98.9	55.4	
Level of Service	F	F		F	F		F	D		F	E	
Approach Delay (s)		102.9			104.3			56.1			59.2	
Approach LOS		F			F			E			E	

Intersection Summary			
HCM Average Control Delay	69.3	HCM Level of Service	E
HCM Volume to Capacity ratio	0.95		
Actuated Cycle Length (s)	189.2	Sum of lost time (s)	13.0
Intersection Capacity Utilization	95.9%	ICU Level of Service	F
Analysis Period (min)	15		
c Critical Lane Group			

Movement	EBL	EBT	EBR	WBL	WBT	WBR	NBL	NBT	NBR	SBL	SBT	SBR
Lane Configurations												
Volume (vph)	218	474	59	358	352	13	85	1406	359	225	2107	270
Movement Number	7	4	14	3	8	18	5	2	12	1	6	16
Initial Queue, veh	0	0	0	0	0	0	0	0	0	0	0	0
Ped-Bike Adj. Factor (A_pbT)	1.00		1.00	1.00		1.00	1.00		1.00	1.00		1.00
Parking, Bus Adj. Factors	1.00	1.00	1.00	1.00	1.00	1.00	1.00	1.00	1.00	1.00	1.00	1.00
Adj. Sat. Flow Rate, veh/h/ln	1863	1863	1863	1863	1863	1863	1863	1863	1863	1863	1863	1863
Lanes	1	2	0	1	2	0	1	3	0	1	3	0
Lane Assignment												
Capacity, veh/h	299	548	68	311	626	23	107	1810	458	264	2395	300
Proportion Arriving On Green	0.17	0.17	0.17	0.18	0.18	0.18	0.04	0.45	0.45	0.11	0.52	0.52
Movement Delay, s/veh	88.3	111.5	113.8	214.3	74.9	75.1	93.1	52.0	58.1	92.3	53.7	68.2
Movement LOS	F	F	F	F	E	E	F	D	E	F	D	E
Approach Volume, veh/h		816			786			2011			2828	
Approach Delay, s/veh		105.6			144.0			55.8			61.6	
Approach LOS		F			F			E			E	

Timer:	1	2	3	4	5	6	7	8
Assigned Phase	1	2	8	4	5	6		
Case No	1.1	4.0	10.0	10.0	1.1	4.0		
Phase Duration (G+Y+Rc), s	24.26	89.17	38.00	36.75	10.00	103.43		
Change Period (Y+Rc), s	3.00	5.00	5.00	5.00	3.00	5.00		
Max. Allowable Headway (MAH), s	4.00	3.96	3.96	3.96	4.00	3.96		
Maximum Green Setting (Gmax), s	26.00	81.00	33.00	32.00	7.00	100.00		
Max. Queue Clearance Time (g_c+I1), s	20.91	65.93	35.00	31.58	7.38	96.30		
Green Extension Time (g_e), s	0.35	14.13	0.00	0.16	0.00	2.13		
Probability of Phase Call (p_c)	1.000	1.000	1.000	1.000	0.992	1.000		
Probability of Max Out (p_x)	0.491	0.947	1.000	1.000	1.000	1.000		

Left-Turn Movement Data					
Assigned Movement	1		3	7	5
Mvmt. Sat Flow, veh/h	1774.04		1774.04	1774.04	1774.04

Through Movement Data					
Assigned Movement		2	8	4	6
Mvmt. Sat Flow, veh/h		4047.02	3570.70	3251.11	4579.07

Right-Turn Movement Data					
Assigned Movement		12	18	14	16
Mvmt. Sat Flow, veh/h		1025.03	131.57	403.22	572.79

Left Lane Group Data								
Assigned Movement	1	0	3	7	5	0	0	0
Lane Assignment	L (Pr/Pm)		L	LL (Pr/Pm)				
Lanes in Group	1	0	1	1	1	0	0	0
Group Volume (v), veh/h	244.6	0.0	389.1	237.0	92.4	0.0	0.0	0.0
Group Sat. Flow (s), veh/h/ln	1774.0	0.0	1774.0	1774.0	1774.0	0.0	0.0	0.0
Queue Serve Time (g_s), s	18.9	0.0	33.0	24.1	5.4	0.0	0.0	0.0
Cycle Queue Clear Time (g_c), s	18.9	0.0	33.0	24.1	5.4	0.0	0.0	0.0

Perm LT Sat Flow Rate (s_l), veh/h/ln	232.2	0.0	1774.0	1774.0	120.2	0.0	0.0	0.0
Shared LT Sat Flow (s_sh), veh/h/ln	0.0	0.0	0.0	0.0	0.0	0.0	0.0	0.0
Perm LT Eff. Green (g_p), s	100.4	0.0	0.0	0.0	84.2	0.0	0.0	0.0
Perm LT Serve Time (g_u), s	20.2	0.0	0.0	0.0	4.1	0.0	0.0	0.0
Perm LT Que Serve Time (g_ps), s	20.2	0.0	0.0	0.0	4.1	0.0	0.0	0.0
Time to First Blk (g_f), s	0.0	0.0	0.0	0.0	0.0	0.0	0.0	0.0
Serve Time pre Blk (g_fs), s	0.0	0.0	0.0	0.0	0.0	0.0	0.0	0.0
Proportion LT Inside Lane (P_L)	1.000	0.000	1.000	1.000	1.000	0.000	0.000	0.000
Lane Group Capacity (c), veh/h	263.7	0.0	311.1	299.3	106.9	0.0	0.0	0.0
Volume-to-Capacity Ratio (X)	0.928	0.000	1.251	0.792	0.864	0.000	0.000	0.000
Available Capacity (c_a), veh/h	308.4	0.0	311.1	301.7	106.9	0.0	0.0	0.0
Upstream Filter Factor (I)	1.000	0.000	1.000	1.000	1.000	0.000	0.000	0.000
Uniform Delay (d1), s/veh	61.7	0.0	77.6	75.0	45.6	0.0	0.0	0.0
Incremental Delay (d2), s/veh	30.5	0.0	136.7	13.3	47.5	0.0	0.0	0.0
Initial Queue Delay (d3), s/veh	0.0	0.0	0.0	0.0	0.0	0.0	0.0	0.0
Control Delay (d), s/veh	92.3	0.0	214.3	88.3	93.1	0.0	0.0	0.0
First-Term Queue (Q1), veh/ln	8.5	0.0	15.2	11.1	2.4	0.0	0.0	0.0
Second-Term Queue (Q2), veh/ln	2.2	0.0	11.8	1.1	1.4	0.0	0.0	0.0
Third-Term Queue (Q3), veh/ln	0.0	0.0	0.0	0.0	0.0	0.0	0.0	0.0
Percentile bk-of-que factor (f_B%)	1.000	0.000	1.000	1.000	1.000	0.000	0.000	0.000
Percentile Back of Queue (Q%), veh/ln	10.7	0.0	27.0	12.2	3.8	0.0	0.0	0.0
Percentile Storage Ratio (RQ%)	2.10	0.00	2.40	0.90	0.60	0.00	0.00	0.00
Initial Queue (Qb), veh	0.0	0.0	0.0	0.0	0.0	0.0	0.0	0.0
Final (Residual) Queue (Qe), veh	0.0	0.0	19.5	0.0	0.0	0.0	0.0	0.0
Saturated Delay (ds), s/veh	0.0	0.0	0.0	0.0	0.0	0.0	0.0	0.0
Saturated Queue (Qs), veh	0.0	0.0	0.0	0.0	0.0	0.0	0.0	0.0
Saturated Capacity (cs), veh/h	0.0	0.0	0.0	0.0	0.0	0.0	0.0	0.0
Initial Queue Clear Time (tc), h	0.0	0.0	0.3	0.0	0.0	0.0	0.0	0.0

Middle Lane Group Data								
Assigned Movement	0	2	8	4	0	6	0	0
Lane Assignment		T	T	T		T		
Lanes in Group	0	2	1	1	0	2	0	0
Group Volume (v), veh/h	0.0	1278.2	199.2	294.4	0.0	1681.1	0.0	0.0
Group Sat. Flow (s), veh/h/ln	0.0	1695.1	1862.7	1862.7	0.0	1695.1	0.0	0.0
Queue Serve Time (g_s), s	0.0	62.9	18.6	29.4	0.0	88.3	0.0	0.0
Cycle Queue Clear Time (g_c), s	0.0	62.9	18.6	29.4	0.0	88.3	0.0	0.0
Lane Group Capacity (c), veh/h	0.0	1516.4	326.7	314.2	0.0	1773.3	0.0	0.0
Volume-to-Capacity Ratio (X)	0.000	0.843	0.610	0.937	0.000	0.948	0.000	0.000
Available Capacity (c_a), veh/h	0.0	1516.4	326.7	316.8	0.0	1801.6	0.0	0.0
Upstream Filter Factor (I)	0.000	1.000	1.000	1.000	0.000	1.000	0.000	0.000
Uniform Delay (d1), s/veh	0.0	46.1	71.6	77.2	0.0	42.5	0.0	0.0
Incremental Delay (d2), s/veh	0.0	5.9	3.3	34.3	0.0	11.2	0.0	0.0
Initial Queue Delay (d3), s/veh	0.0	0.0	0.0	0.0	0.0	0.0	0.0	0.0
Control Delay (d), s/veh	0.0	52.0	74.9	111.5	0.0	53.7	0.0	0.0
First-Term Queue (Q1), veh/ln	0.0	26.7	9.0	14.2	0.0	36.8	0.0	0.0
Second-Term Queue (Q2), veh/ln	0.0	1.2	0.3	3.0	0.0	2.8	0.0	0.0
Third-Term Queue (Q3), veh/ln	0.0	0.0	0.0	0.0	0.0	0.0	0.0	0.0
Percentile bk-of-que factor (f_B%)	0.000	1.000	1.000	1.000	0.000	1.000	0.000	0.000
Percentile Back of Queue (Q%), veh/ln	0.0	27.9	9.3	17.2	0.0	39.5	0.0	0.0
Percentile Storage Ratio (RQ%)	0.00	1.55	0.13	1.26	0.00	1.37	0.00	0.00

Initial Queue (Qb), veh	0.0	0.0	0.0	0.0	0.0	0.0	0.0	0.0
Final (Residual) Queue (Qe), veh	0.0	0.0	0.0	0.0	0.0	0.0	0.0	0.0
Saturated Delay (ds), s/veh	0.0	0.0	0.0	0.0	0.0	0.0	0.0	0.0
Saturated Queue (Qs), veh	0.0	0.0	0.0	0.0	0.0	0.0	0.0	0.0
Saturated Capacity (cs), veh/h	0.0	0.0	0.0	0.0	0.0	0.0	0.0	0.0
Initial Queue Clear Time (tc), h	0.0	0.0	0.0	0.0	0.0	0.0	0.0	0.0
Right Lane Group Data								
Assigned Movement	0	12	18	14	0	16	0	0
Lane Assignment		T+R	T+R	T+R		T+R		
Lanes in Group	0	1	1	1	0	1	0	0
Group Volume (v), veh/h	0.0	640.3	197.6	284.9	0.0	902.6	0.0	0.0
Group Sat. Flow (s), veh/h/ln	0.0	1681.9	1839.5	1791.6	0.0	1761.7	0.0	0.0
Queue Serve Time (g_s), s	0.0	63.9	18.7	29.6	0.0	94.3	0.0	0.0
Cycle Queue Clear Time (g_c), s	0.0	63.9	18.7	29.6	0.0	94.3	0.0	0.0
Prot RT Sat Flow Rate (s_R), veh/h/ln	0.0	0.0	0.0	0.0	0.0	0.0	0.0	0.0
Prot RT Eff. Green (g_R), s	0.0	0.0	0.0	0.0	0.0	0.0	0.0	0.0
Proportion RT Outside Lane (P_R)	0.000	0.609	0.072	0.225	0.000	0.325	0.000	0.000
Lane Group Capacity (c), veh/h	0.0	752.3	322.6	302.2	0.0	921.5	0.0	0.0
Volume-to-Capacity Ratio (X)	0.000	0.851	0.612	0.943	0.000	0.980	0.000	0.000
Available Capacity (c_a), veh/h	0.0	752.3	322.6	304.7	0.0	936.2	0.0	0.0
Upstream Filter Factor (I)	0.000	1.000	1.000	1.000	0.000	1.000	0.000	0.000
Uniform Delay (d1), s/veh	0.0	46.4	71.7	77.3	0.0	43.9	0.0	0.0
Incremental Delay (d2), s/veh	0.0	11.7	3.4	36.5	0.0	24.3	0.0	0.0
Initial Queue Delay (d3), s/veh	0.0	0.0	0.0	0.0	0.0	0.0	0.0	0.0
Control Delay (d), s/veh	0.0	58.1	75.1	113.8	0.0	68.2	0.0	0.0
First-Term Queue (Q1), veh/ln	0.0	26.9	8.9	13.7	0.0	40.8	0.0	0.0
Second-Term Queue (Q2), veh/ln	0.0	2.4	0.3	3.1	0.0	6.2	0.0	0.0
Third-Term Queue (Q3), veh/ln	0.0	0.0	0.0	0.0	0.0	0.0	0.0	0.0
Percentile bk-of-que factor (f_B%)	0.000	1.000	1.000	1.000	0.000	1.000	0.000	0.000
Percentile Back of Queue (Q%), veh/ln	0.0	29.3	9.2	16.8	0.0	47.0	0.0	0.0
Percentile Storage Ratio (RQ%)	0.00	1.63	0.13	1.24	0.00	1.63	0.00	0.00
Initial Queue (Qb), veh	0.0	0.0	0.0	0.0	0.0	0.0	0.0	0.0
Final (Residual) Queue (Qe), veh	0.0	0.0	0.0	0.0	0.0	0.0	0.0	0.0
Saturated Delay (ds), s/veh	0.0	0.0	0.0	0.0	0.0	0.0	0.0	0.0
Saturated Queue (Qs), veh	0.0	0.0	0.0	0.0	0.0	0.0	0.0	0.0
Saturated Capacity (cs), veh/h	0.0	0.0	0.0	0.0	0.0	0.0	0.0	0.0
Initial Queue Clear Time (tc), h	0.0	0.0	0.0	0.0	0.0	0.0	0.0	0.0
Intersection Summary								
HCM Average Control Delay		75.4						
HCM Level of Service		E						

Movement	EBL	EBT	EBR	WBL	WBT	WBR	NEL	NET	NER	SWL	SWT	SWR
Lane Configurations												
Volume (veh/h)	32	25	0	0	9	16	42	1976	21	0	0	0
Sign Control		Stop			Stop			Free			Free	
Grade		0%			0%			0%			0%	
Peak Hour Factor	0.93	0.93	0.93	0.93	0.93	0.93	0.93	0.93	0.93	0.93	0.93	0.93
Hourly flow rate (vph)	34	27	0	0	10	17	45	2125	23	0	0	0
Pedestrians												
Lane Width (ft)												
Walking Speed (ft/s)												
Percent Blockage												
Right turn flare (veh)												
Median type								None			None	
Median storage veh)												
Upstream signal (ft)												
pX, platoon unblocked												
vC, conflicting volume	821	2238	0	2240	2226	720	0			2147		
vC1, stage 1 conf vol												
vC2, stage 2 conf vol												
vCu, unblocked vol	821	2238	0	2240	2226	720	0			2147		
tC, single (s)	7.5	6.5	6.9	7.5	6.5	6.9	4.1			4.1		
tC, 2 stage (s)												
tF (s)	3.5	4.0	3.3	3.5	4.0	3.3	2.2			2.2		
p0 queue free %	83	34	100	100	77	95	97			100		
cM capacity (veh/h)	204	41	1084	11	41	371	1622			248		

Direction, Lane #	EB 1	WB 1	NE 1	NE 2	NE 3
Volume Total	61	27	576	1062	554
Volume Left	34	0	45	0	0
Volume Right	0	17	0	0	23
cSH	74	96	1622	1700	1700
Volume to Capacity	0.83	0.28	0.03	0.62	0.33
Queue Length 95th (ft)	102	26	2	0	0
Control Delay (s)	155.5	56.6	0.8	0.0	0.0
Lane LOS	F	F	A		
Approach Delay (s)	155.5	56.6	0.2		
Approach LOS	F	F			

Intersection Summary			
Average Delay	5.1		
Intersection Capacity Utilization	55.9%	ICU Level of Service	B
Analysis Period (min)	15		

Movement	EBL	EBT	EBR	WBL	WBT	WBR	NEL	NET	NER	SWL	SWT	SWR
Lane Configurations												
Volume (veh/h)	0	28	0	0	4	0	1	2110	8	0	0	0
Sign Control		Stop			Stop			Free			Free	
Grade		0%			0%			0%			0%	
Peak Hour Factor	0.91	0.91	0.91	0.91	0.91	0.91	0.91	0.91	0.91	0.91	0.91	0.91
Hourly flow rate (vph)	0	31	0	0	4	0	1	2319	9	0	0	0
Pedestrians												
Lane Width (ft)												
Walking Speed (ft/s)												
Percent Blockage												
Right turn flare (veh)												
Median type								None			None	
Median storage veh)												
Upstream signal (ft)												
pX, platoon unblocked												
vC, conflicting volume	777	2330	0	2341	2325	777	0			2327		
vC1, stage 1 conf vol												
vC2, stage 2 conf vol												
vCu, unblocked vol	777	2330	0	2341	2325	777	0			2327		
tC, single (s)	7.5	6.5	6.9	7.5	6.5	6.9	4.1			4.1		
tC, 2 stage (s)												
tF (s)	3.5	4.0	3.3	3.5	4.0	3.3	2.2			2.2		
p0 queue free %	100	16	100	100	88	100	100			100		
cM capacity (veh/h)	260	37	1084	6	37	339	1622			210		

Direction, Lane #	EB 1	WB 1	NE 1	NE 2	NE 3
Volume Total	31	4	581	1159	588
Volume Left	0	0	1	0	0
Volume Right	0	0	0	0	9
cSH	37	37	1622	1700	1700
Volume to Capacity	0.84	0.12	0.00	0.68	0.35
Queue Length 95th (ft)	76	9	0	0	0
Control Delay (s)	264.8	115.9	0.0	0.0	0.0
Lane LOS	F	F	A		
Approach Delay (s)	264.8	115.9	0.0		
Approach LOS	F	F			

Intersection Summary			
Average Delay	3.7		
Intersection Capacity Utilization	51.0%	ICU Level of Service	A
Analysis Period (min)	15		

Movement	EBL	EBR	NBL	NBT	SBT	SBR
Lane Configurations						
Volume (veh/h)	1	1	1	197	230	2
Sign Control	Stop			Free	Free	
Grade	0%			0%	0%	
Peak Hour Factor	0.92	0.92	0.92	0.92	0.92	0.92
Hourly flow rate (vph)	1	1	1	214	250	2
Pedestrians						
Lane Width (ft)						
Walking Speed (ft/s)						
Percent Blockage						
Right turn flare (veh)						
Median type				None	None	
Median storage veh)						
Upstream signal (ft)						
pX, platoon unblocked						
vC, conflicting volume	467	251	252			
vC1, stage 1 conf vol						
vC2, stage 2 conf vol						
vCu, unblocked vol	467	251	252			
tC, single (s)	6.4	6.2	4.1			
tC, 2 stage (s)						
tF (s)	3.5	3.3	2.2			
p0 queue free %	100	100	100			
cM capacity (veh/h)	553	788	1313			

Direction, Lane #	EB 1	NB 1	SB 1
Volume Total	2	215	252
Volume Left	1	1	0
Volume Right	1	0	2
cSH	650	1313	1700
Volume to Capacity	0.00	0.00	0.15
Queue Length 95th (ft)	0	0	0
Control Delay (s)	10.6	0.0	0.0
Lane LOS	B	A	
Approach Delay (s)	10.6	0.0	0.0
Approach LOS	B		

Intersection Summary			
Average Delay	0.1		
Intersection Capacity Utilization	22.2%	ICU Level of Service	A
Analysis Period (min)	15		

Movement	EBL	EBR	NBL	NBT	SBT	SBR
Lane Configurations						
Volume (veh/h)	0	0	0	203	234	1
Sign Control	Stop			Free	Free	
Grade	0%			0%	0%	
Peak Hour Factor	0.92	0.92	0.92	0.92	0.92	0.92
Hourly flow rate (vph)	0	0	0	221	254	1
Pedestrians						
Lane Width (ft)						
Walking Speed (ft/s)						
Percent Blockage						
Right turn flare (veh)						
Median type				None	None	
Median storage veh)						
Upstream signal (ft)						
pX, platoon unblocked						
vC, conflicting volume	476	255	255			
vC1, stage 1 conf vol						
vC2, stage 2 conf vol						
vCu, unblocked vol	476	255	255			
tC, single (s)	6.4	6.2	4.1			
tC, 2 stage (s)						
tF (s)	3.5	3.3	2.2			
p0 queue free %	100	100	100			
cM capacity (veh/h)	548	784	1310			

Direction, Lane #	EB 1	NB 1	SB 1
Volume Total	0	221	255
Volume Left	0	0	0
Volume Right	0	0	1
cSH	1700	1310	1700
Volume to Capacity	0.00	0.00	0.15
Queue Length 95th (ft)	0	0	0
Control Delay (s)	0.0	0.0	0.0
Lane LOS	A		
Approach Delay (s)	0.0	0.0	0.0
Approach LOS	A		

Intersection Summary			
Average Delay	0.0		
Intersection Capacity Utilization	15.7%	ICU Level of Service	A
Analysis Period (min)	15		

Movement	EBL	EBR	NBL	NBT	SBT	SBR
Lane Configurations						
Volume (veh/h)	7	4	1	193	208	3
Sign Control	Stop			Free	Free	
Grade	0%			0%	0%	
Peak Hour Factor	0.92	0.92	0.92	0.92	0.92	0.92
Hourly flow rate (vph)	8	4	1	210	226	3
Pedestrians						
Lane Width (ft)						
Walking Speed (ft/s)						
Percent Blockage						
Right turn flare (veh)						
Median type				None	None	
Median storage veh)						
Upstream signal (ft)						
pX, platoon unblocked						
vC, conflicting volume	440	228	229			
vC1, stage 1 conf vol						
vC2, stage 2 conf vol						
vCu, unblocked vol	440	228	229			
tC, single (s)	6.4	6.2	4.1			
tC, 2 stage (s)						
tF (s)	3.5	3.3	2.2			
p0 queue free %	99	99	100			
cM capacity (veh/h)	574	812	1339			

Direction, Lane #	EB 1	NB 1	SB 1
Volume Total	12	211	229
Volume Left	8	1	0
Volume Right	4	0	3
cSH	643	1339	1700
Volume to Capacity	0.02	0.00	0.13
Queue Length 95th (ft)	1	0	0
Control Delay (s)	10.7	0.0	0.0
Lane LOS	B	A	
Approach Delay (s)	10.7	0.0	0.0
Approach LOS	B		

Intersection Summary			
Average Delay	0.3		
Intersection Capacity Utilization	21.1%	ICU Level of Service	A
Analysis Period (min)	15		

Movement	EBL	EBR	NBL	NBT	SBT	SBR
Lane Configurations						
Volume (veh/h)	28	29	21	153	141	15
Sign Control	Stop			Free	Free	
Grade	0%			0%	0%	
Peak Hour Factor	0.92	0.92	0.92	0.92	0.92	0.92
Hourly flow rate (vph)	30	32	23	166	153	16
Pedestrians						
Lane Width (ft)						
Walking Speed (ft/s)						
Percent Blockage						
Right turn flare (veh)						
Median type				None	None	
Median storage veh)						
Upstream signal (ft)						
pX, platoon unblocked						
vC, conflicting volume	373	161	170			
vC1, stage 1 conf vol						
vC2, stage 2 conf vol						
vCu, unblocked vol	373	161	170			
tC, single (s)	6.4	6.2	4.1			
tC, 2 stage (s)						
tF (s)	3.5	3.3	2.2			
p0 queue free %	95	96	98			
cM capacity (veh/h)	617	884	1408			

Direction, Lane #	EB 1	NB 1	SB 1
Volume Total	62	189	170
Volume Left	30	23	0
Volume Right	32	0	16
cSH	729	1408	1700
Volume to Capacity	0.08	0.02	0.10
Queue Length 95th (ft)	7	1	0
Control Delay (s)	10.4	1.0	0.0
Lane LOS	B	A	
Approach Delay (s)	10.4	1.0	0.0
Approach LOS	B		

Intersection Summary			
Average Delay	2.0		
Intersection Capacity Utilization	30.9%	ICU Level of Service	A
Analysis Period (min)	15		

Movement	EBL	EBT	EBR	WBL	WBT	WBR	NBL	NBT	NBR	SBL	SBT	SBR
Lane Configurations												
Sign Control		Stop			Stop			Stop			Stop	
Volume (vph)	3	114	44	36	157	1	33	158	15	2	1	4
Peak Hour Factor	0.92	0.92	0.92	0.92	0.92	0.92	0.92	0.92	0.92	0.92	0.92	0.92
Hourly flow rate (vph)	3	124	48	39	171	1	36	172	16	2	1	4

Direction, Lane #	EB 1	WB 1	NB 1	SB 1
Volume Total (vph)	175	211	224	8
Volume Left (vph)	3	39	36	2
Volume Right (vph)	48	1	16	4
Hadj (s)	-0.13	0.07	0.02	-0.25
Departure Headway (s)	4.6	4.8	4.9	4.9
Degree Utilization, x	0.23	0.28	0.30	0.01
Capacity (veh/h)	725	711	696	648
Control Delay (s)	9.0	9.6	10.0	8.0
Approach Delay (s)	9.0	9.6	10.0	8.0
Approach LOS	A	A	A	A

Intersection Summary			
Delay	9.5		
HCM Level of Service	A		
Intersection Capacity Utilization	41.8%	ICU Level of Service	A
Analysis Period (min)	15		

Appendix H

Trip Generation Analysis Data

Phase 1 - 2025

A.M. Peak Hour Volumes

Development	Lot No.	Land Uses	ITE Land Use Code	Description	Unit	Total Units	Rate/Unit	Trips	Equation	Transit Reduction		Total Trips	Internal Capture		Total Trips	Directional Distribution			
										%	Trips		%	Trips		Entering		Exiting	
CBD Core District	1	Residential	**223**	Mid-Rise Apartment	Dwelling Units	240	0.30	72	86	10%	9	77	20%	17	60	31.0%	19	69.0%	41
		Office	**710**	General Office Building	ksf	8	1.56	16	31	10%	3	28	20%	6	22	88.0%	19	12.0%	3
	2	Residential	**223**	Mid-Rise Apartment	Dwelling Units	176	0.30	53	60	10%	6	54	20%	12	42	31.0%	13	69.0%	29
	3	Residential	**223**	Mid-Rise Apartment	Dwelling Units	176	0.30	53	60	10%	6	54	20%	12	42	31.0%	13	69.0%	29
		Office	**710**	General Office Building	ksf	10	1.56	19	36	10%	4	32	20%	7	25	88.0%	22	12.0%	3
	4	Residential	**223**	Mid-Rise Apartment	Dwelling Units	88	0.30	27	24	10%	3	24	20%	5	19	31.0%	6	69.0%	13
	5	Residential	**223**	Mid-Rise Apartment	Dwelling Units	176	0.30	53	60	10%	6	54	20%	12	42	31.0%	13	69.0%	29
		Office	**710**	General Office Building	ksf	10	1.56	19	36	10%	4	32	20%	7	25	88.0%	22	12.0%	3
	6	Residential	**223**	Mid-Rise Apartment	Dwelling Units	88	0.30	27	24	10%	3	24	20%	5	19	31.0%	6	69.0%	13
	7	Residential	**223**	Mid-Rise Apartment	Dwelling Units	176	0.30	53	60	10%	6	54	20%	12	42	31.0%	13	69.0%	29
		Office	**710**	General Office Building	ksf	10	1.56	19	36	10%	4	32	20%	7	25	88.0%	22	12.0%	3
	8	Residential	**223**	Mid-Rise Apartment	Dwelling Units	88	0.30	27	24	10%	3	24	20%	5	19	31.0%	6	69.0%	13
	9	Office	**710**	General Office Building	ksf	8	1.56	16	31	10%	3	28	20%	6	22	88.0%	19	12.0%	3
	11	Office	**710**	General Office Building	ksf	56	1.56	110	144	10%	14	130	20%	29	101	88.0%	89	12.0%	12
	12	Residential	**223**	Mid-Rise Apartment	Dwelling Units	112	0.30	34	33	10%	3	31	20%	7	24	31.0%	8	69.0%	17
		Office	**710**	General Office Building	ksf	5	1.56	10	21	10%	2	19	20%	4	15	88.0%	13	12.0%	2
Total Trip Generation (A.M. Peak) - Phase 1															**544**	**Entering**	**303**	**Exiting**	**242**

ITE Code	Equation(*)
223	**Y=0.41(X)-13.06**
710	**Y=0.80*LN(X)+1.**

(*)From Trip Generation Manual, 9th Edition, by the Institute of Transportation Engineers (ITE)

Phase 1 - 2025

MID. Peak Hour Volumes

Development	Lot No.	Land Uses	ITE Land Use Code	Description	Unit	Total Units	Rate/Unit	Trips	Equation	Transit Reduction		Total Trips	Internal Capture		Total Trips	Directional Distribution			
										%	Trips		%	Trips		Entering		Exiting	
CBD Core District	1	Residential	**223**	Mid-Rise Apartment	Dwelling Units	240	0.39	94	105	10%	11	94	20%	21	73	58.0%	42	42.0%	31
		Office	**710**	General Office Building	ksf	8	1.49	15	90	10%	9	81	20%	18	63	17.0%	11	83.0%	52
	2	Residential	**223**	Mid-Rise Apartment	Dwelling Units	176	0.39	69	74	10%	7	67	20%	15	52	58.0%	30	42.0%	22
	3	Residential	**223**	Mid-Rise Apartment	Dwelling Units	176	0.39	69	74	10%	7	67	20%	15	52	58.0%	30	42.0%	22
		Office	**710**	General Office Building	ksf	10	1.49	18	92	10%	9	83	20%	18	65	17.0%	11	83.0%	54
	4	Residential	**223**	Mid-Rise Apartment	Dwelling Units	88	0.39	35	32	10%	4	31	20%	6	25	58.0%	14	42.0%	10
	5	Residential	**223**	Mid-Rise Apartment	Dwelling Units	176	0.39	69	74	10%	7	67	20%	15	52	58.0%	30	42.0%	22
		Office	**710**	General Office Building	ksf	10	1.49	18	92	10%	9	83	20%	18	65	17.0%	11	83.0%	54
	6	Residential	**223**	Mid-Rise Apartment	Dwelling Units	88	0.39	35	32	10%	4	31	20%	6	25	58.0%	14	42.0%	10
	7	Residential	**223**	Mid-Rise Apartment	Dwelling Units	176	0.39	69	74	10%	7	67	20%	15	52	58.0%	30	42.0%	22
		Office	**710**	General Office Building	ksf	10	1.49	18	92	10%	9	83	20%	18	65	17.0%	11	83.0%	54
	8	Residential	**223**	Mid-Rise Apartment	Dwelling Units	88	0.39	35	32	10%	4	31	20%	6	25	58.0%	14	42.0%	10
	9	Office	**710**	General Office Building	ksf	8	1.49	15	90	10%	9	81	20%	18	63	17.0%	11	83.0%	52
	11	Office	**710**	General Office Building	ksf	56	1.49	105	157	10%	16	141	20%	31	110	17.0%	19	83.0%	91
	12	Residential	**223**	Mid-Rise Apartment	Dwelling Units	112	0.39	44	43	10%	4	40	20%	9	31	58.0%	18	42.0%	13
		Office	**710**	General Office Building	ksf	5	1.49	9	86	10%	9	77	20%	17	60	17.0%	10	83.0%	50
Total Trip Generation (MID. Peak) - Phase 1															**876**	**Entering**	**306**	**Exiting**	**569**

P.M. Peak Hour Volumes

Development	Lot No.	Land Uses	ITE Land Use Code	Description	Unit	Total Units	Rate/Unit	Trips	Equation	Transit Reduction		Total Trips	Internal Capture		Total Trips	Directional Distribution			
										%	Trips		%	Trips		Entering		Exiting	
CBD Core District	1	Residential	**223**	Mid-Rise Apartment	Dwelling Units	240	0.39	94	105	10%	11	94	20%	21	73	58.0%	42	42.0%	31
		Office	**710**	General Office Building	ksf	8	1.49	15	90	10%	9	81	20%	18	63	17.0%	11	83.0%	52
	2	Residential	**223**	Mid-Rise Apartment	Dwelling Units	176	0.39	69	74	10%	7	67	20%	15	52	58.0%	30	42.0%	22
	3	Residential	**223**	Mid-Rise Apartment	Dwelling Units	176	0.39	69	74	10%	7	67	20%	15	52	58.0%	30	42.0%	22
		Office	**710**	General Office Building	ksf	10	1.49	18	92	10%	9	83	20%	18	65	17.0%	11	83.0%	54
	4	Residential	**223**	Mid-Rise Apartment	Dwelling Units	88	0.39	35	32	10%	4	31	20%	6	25	58.0%	14	42.0%	10
	5	Residential	**223**	Mid-Rise Apartment	Dwelling Units	176	0.39	69	74	10%	7	67	20%	15	52	58.0%	30	42.0%	22
		Office	**710**	General Office Building	ksf	10	1.49	18	92	10%	9	83	20%	18	65	17.0%	11	83.0%	54
	6	Residential	**223**	Mid-Rise Apartment	Dwelling Units	88	0.39	35	32	10%	4	31	20%	6	25	58.0%	14	42.0%	10
	7	Residential	**223**	Mid-Rise Apartment	Dwelling Units	176	0.39	69	74	10%	7	67	20%	15	52	58.0%	30	42.0%	22
		Office	**710**	General Office Building	ksf	10	1.49	18	92	10%	9	83	20%	18	65	17.0%	11	83.0%	54
	8	Residential	**223**	Mid-Rise Apartment	Dwelling Units	88	0.39	35	32	10%	4	31	20%	6	25	58.0%	14	42.0%	10
	9	Office	**710**	General Office Building	ksf	8	1.49	15	90	10%	9	81	20%	18	63	17.0%	11	83.0%	52
	11	Office	**710**	General Office Building	ksf	56	1.49	105	157	10%	16	141	20%	31	110	17.0%	19	83.0%	91
	12	Residential	**223**	Mid-Rise Apartment	Dwelling Units	112	0.39	44	43	10%	4	40	20%	9	31	58.0%	18	42.0%	13
		Office	**710**	General Office Building	ksf	5	1.49	9	86	10%	9	77	20%	17	60	17.0%	10	83.0%	50
Total Trip Generation (P.M. Peak) - Phase 1															**876**	**Entering**	**306**	**Exiting**	**569**

ITE Code	Equation(*)
223	**Y=0.48(X)-11.07**
710	**Y=1.12(X)+78.45**

(*)From Trip Generation Manual, 9th Edition, by the Institute of Transportation Engineers (ITE)

Phase 2 - 2035

A.M. Peak Hour Volumes

Development	Lot No.	Land Uses	ITE Land Use Code	Description	Unit	Total Units	Rate/Unit	Trips	Equation	Transit Reduction		Total Trips	Internal Capture		Total Trips	Directional Distribution			
										%	Trips		%	Trips		Entering		Exiting	
Central Mixed Use District	1	Residential	**223**	Mid-Rise Apartment	Dwelling Units	147	0.30	45	48	10%	5	43	20%	10	33	31.0%	10	69.0%	23
	2	Residential	**223**	Mid-Rise Apartment	Dwelling Units	80	0.30	24	20	10%	2	22	20%	4	18	31.0%	6	69.0%	12
	3	Residential	**223**	Mid-Rise Apartment	Dwelling Units	41	0.30	13	4	10%	1	12	20%	1	11	31.0%	3	69.0%	8
	4	Residential	**223**	Mid-Rise Apartment	Dwelling Units	77	0.30	24	19	10%	2	22	20%	4	18	31.0%	6	69.0%	13
	5	Residential	**223**	Mid-Rise Apartment	Dwelling Units	52	0.30	16	9	10%	2	14	20%	2	12	31.0%	4	69.0%	8
	6	Residential	**223**	Mid-Rise Apartment	Dwelling Units	53	0.30	16	9	10%	2	14	20%	2	12	31.0%	4	69.0%	8
	7	Residential	**223**	Mid-Rise Apartment	Dwelling Units	50	0.30	15	8	10%	2	13	20%	2	11	31.0%	4	69.0%	8
	8	Residential	**223**	Mid-Rise Apartment	Dwelling Units	51	0.30	16	8	10%	2	14	20%	2	12	31.0%	4	69.0%	9
	9	Residential	**223**	Mid-Rise Apartment	Dwelling Units	48	0.30	15	7	10%	2	13	20%	1	12	31.0%	4	69.0%	8
	10	Residential	**224**	Mid-Rise Apartment	Dwelling Units	57	0.30	18	11	10%	2	16	20%	2	14	31.0%	4	69.0%	10
	11	Residential	**225**	Mid-Rise Apartment	Dwelling Units	89	0.30	27	24	10%	3	24	20%	5	19	31.0%	6	69.0%	13
		Office	**710**	General Office Building	ksf	53	1.49	80	116	10%	12	104	20%	23	81	88.0%	71	12.0%	10
Total Trip Generation (A.M. Peak) - Phase 2															**254**	**Entering**	**126**	**Exiting**	**130**

MID. Peak Hour Volumes

Development	Lot No.	Land Uses	ITE Land Use Code	Description	Unit	Total Units	Rate/Unit	Trips	Equation	Transit Reduction		Total Trips	Internal Capture		Total Trips	Directional Distribution			
										%	Trips		%	Trips		Entering		Exiting	
Central Mixed Use District	1	Residential	**223**	Mid-Rise Apartment	Dwelling Units	147	0.39	58	60	10%	6	54	20%	12	42	58.0%	24	42.0%	18
	2	Residential	**223**	Mid-Rise Apartment	Dwelling Units	80	0.39	32	28	10%	3	29	20%	6	23	58.0%	14	42.0%	10
	3	Residential	**223**	Mid-Rise Apartment	Dwelling Units	41	0.39	16	9	10%	2	14	20%	2	12	58.0%	7	42.0%	5
	4	Residential	**223**	Mid-Rise Apartment	Dwelling Units	77	0.39	31	26	10%	3	28	20%	5	23	58.0%	13	42.0%	10
	5	Residential	**223**	Mid-Rise Apartment	Dwelling Units	52	0.39	21	14	10%	2	19	20%	3	16	58.0%	9	42.0%	7
	6	Residential	**223**	Mid-Rise Apartment	Dwelling Units	53	0.39	21	15	10%	2	19	20%	3	16	58.0%	9	42.0%	7
	7	Residential	**223**	Mid-Rise Apartment	Dwelling Units	50	0.39	20	13	10%	2	18	20%	3	15	58.0%	9	42.0%	6
	8	Residential	**223**	Mid-Rise Apartment	Dwelling Units	51	0.39	20	14	10%	2	18	20%	3	15	58.0%	9	42.0%	6
	9	Residential	**223**	Mid-Rise Apartment	Dwelling Units	48	0.39	19	12	10%	2	17	20%	2	15	58.0%	8	42.0%	6
	10	Residential	**224**	Mid-Rise Apartment	Dwelling Units	57	0.39	23	17	10%	2	21	20%	3	18	58.0%	10	42.0%	7
	11	Residential	**225**	Mid-Rise Apartment	Dwelling Units	89	0.39	35	32	10%	4	31	20%	6	25	58.0%	14	42.0%	10
		Office	**710**	General Office Building	ksf	53	1.49	79	138	10%	14	124	20%	28	96	17.0%	16	83.0%	80
Total Trip Generation (MID. Peak) - Phase 2															**316**	**Entering**	**142**	**Exiting**	**172**

P.M. Peak Hour Volumes

Development	Lot No.	Land Uses	ITE Land Use Code	Description	Unit	Total Units	Rate/Unit	Trips	Equation	Transit Reduction		Total Trips	Internal Capture		Total Trips	Directional Distribution			
										%	Trips		%	Trips		Entering		Exiting	
Central Mixed Use District	1	Residential	**223**	Mid-Rise Apartment	Dwelling Units	147	0.39	58	60	10%	6	54	20%	12	42	58.0%	24	42.0%	18
	2	Residential	**223**	Mid-Rise Apartment	Dwelling Units	80	0.39	32	28	10%	3	29	20%	6	23	58.0%	14	42.0%	10
	3	Residential	**223**	Mid-Rise Apartment	Dwelling Units	41	0.39	16	9	10%	2	14	20%	2	12	58.0%	7	42.0%	5
	4	Residential	**223**	Mid-Rise Apartment	Dwelling Units	77	0.39	31	26	10%	3	28	20%	5	23	58.0%	13	42.0%	10
	5	Residential	**223**	Mid-Rise Apartment	Dwelling Units	52	0.39	21	14	10%	2	19	20%	3	16	58.0%	9	42.0%	7
	6	Residential	**223**	Mid-Rise Apartment	Dwelling Units	53	0.39	21	15	10%	2	19	20%	3	16	58.0%	9	42.0%	7
	7	Residential	**223**	Mid-Rise Apartment	Dwelling Units	50	0.39	20	13	10%	2	18	20%	3	15	58.0%	9	42.0%	6
	8	Residential	**223**	Mid-Rise Apartment	Dwelling Units	51	0.39	20	14	10%	2	18	20%	3	15	58.0%	9	42.0%	6
	9	Residential	**223**	Mid-Rise Apartment	Dwelling Units	48	0.39	19	12	10%	2	17	20%	2	15	58.0%	8	42.0%	6
	10	Residential	**224**	Mid-Rise Apartment	Dwelling Units	57	0.39	23	17	10%	2	21	20%	3	18	58.0%	10	42.0%	7
	11	Residential	**225**	Mid-Rise Apartment	Dwelling Units	89	0.39	35	32	10%	4	31	20%	6	25	58.0%	14	42.0%	10
		Office	**710**	General Office Building	ksf	53	1.49	79	138	10%	14	124	20%	28	96	17.0%	16	83.0%	80
Total Trip Generation (MID. Peak) - Phase 2															**316**	**Entering**	**142**	**Exiting**	**172**

ITE Code	Equation(*)
223	**Y=0.41(X)-13.06**
	Y=0.48(X)-11.07
710	**Y=0.80LN(X)+1.57**
	Y=1.12(X)+78.45

(*)From Trip Generation Manual, 9th Edition, by the Institute of Transportation Engineers (ITE)

2045-Phase 3

A.M. Peak Hour Volumes

Development	Lot No.	Land Uses	ITE Land Use Code	Description	Unit	Total Units	Rate/Unit	Trips	Equation	Transit Reduction %	Transit Reduction Trips	Total Trips	Internal Capture %	Internal Capture Trips	Total Trips	Directional Distribution Entering		Directional Distribution Exiting	
Perimeter District	1	Residential	**223**	Mid-Rise Apartment	Dwelling Units	75	0.30	23	18	10%	2	21	20%	4	17	31.0%	5	69.0%	12
		Office	**710**	General Office Building	ksf	34	1.56	70	101	10%	10	91	20%	20	71	88.0%	62	12.0%	8
	2	Residential	**223**	Mid-Rise Apartment	Dwelling Units	75	0.30	23	18	10%	2	21	20%	4	17	31.0%	5	69.0%	12
		Office	**710**	General Office Building	ksf	34	1.56	70	101	10%	10	91	20%	20	71	88.0%	62	12.0%	8
	3	Residential	**223**	Mid-Rise Apartment	Dwelling Units	75	0.30	23	18	10%	2	21	20%	4	17	31.0%	5	69.0%	12
		Office	**710**	General Office Building	ksf	34	1.56	70	101	10%	10	91	20%	20	71	88.0%	62	12.0%	8
	4	Residential	**223**	Mid-Rise Apartment	Dwelling Units	75	0.30	23	18	10%	2	21	20%	4	17	31.0%	5	69.0%	12
		Office	**710**	General Office Building	ksf	34	1.56	70	101	10%	10	91	20%	20	71	88.0%	62	12.0%	8
	5	Residential	**223**	Mid-Rise Apartment	Dwelling Units	75	0.30	23	18	10%	2	21	20%	4	17	31.0%	5	69.0%	12
		Office	**710**	General Office Building	ksf	34	1.56	70	101	10%	10	91	20%	20	71	88.0%	62	12.0%	8
	6	Residential	**223**	Mid-Rise Apartment	Dwelling Units	75	0.30	23	18	10%	2	21	20%	4	17	31.0%	5	69.0%	12
		Office	**710**	General Office Building	ksf	34	1.56	70	101	10%	10	91	20%	20	71	88.0%	62	12.0%	8
Total Trip Generation - Perimeter District															**529**	**Entering**	**402**	**Exiting**	**120**
North Mixed Use District	1	Residential	**223**	Mid-Rise Apartment	Dwelling Units	50	0.30	15	8	10%	2	13	20%	2	11	31.0%	4	69.0%	8
	2	Residential	**223**	Mid-Rise Apartment	Dwelling Units	50	0.30	15	8	10%	2	13	20%	2	11	31.0%	4	69.0%	8
	3	Residential	**223**	Mid-Rise Apartment	Dwelling Units	50	0.30	15	8	10%	2	13	20%	2	11	31.0%	4	69.0%	8
	4	Residential	**223**	Mid-Rise Apartment	Dwelling Units	50	0.30	15	8	10%	2	13	20%	2	11	31.0%	4	69.0%	8
	5	Residential	**223**	Mid-Rise Apartment	Dwelling Units	50	0.30	15	8	10%	2	13	20%	2	11	31.0%	4	69.0%	8
	6	Residential	**223**	Mid-Rise Apartment	Dwelling Units	50	0.30	15	8	10%	2	13	20%	2	11	31.0%	4	69.0%	8
		Office	**710**	General Office Building	ksf	141	1.56	220	252	10%	25	227	20%	50	177	88.0%	155	12.0%	21
	7	Residential	**223**	Mid-Rise Apartment	Dwelling Units	50	0.30	15	8	10%	2	13	20%	2	11	31.0%	4	69.0%	8
		Office	**710**	General Office Building	ksf	145	1.56	227	258	10%	26	232	20%	52	180	88.0%	159	12.0%	22
	8	Residential	**223**	Mid-Rise Apartment	Dwelling Units	50	0.30	15	8	10%	2	13	20%	2	11	31.0%	4	69.0%	8
	9	Residential	**223**	Mid-Rise Apartment	Dwelling Units	50	0.30	15	8	10%	2	13	20%	2	11	31.0%	4	69.0%	8
	10	Residential	**223**	Mid-Rise Apartment	Dwelling Units	50	0.30	15	8	10%	2	13	20%	2	11	31.0%	4	69.0%	8
	11	Residential	**223**	Mid-Rise Apartment	Dwelling Units	50	0.30	15	8	10%	2	13	20%	2	11	31.0%	4	69.0%	8
Total Trip Generation - North Mixed Use District															**482**	**Entering**	**358**	**Exiting**	**131**
US 1 Island District	1	Residential	**223**	Mid-Rise Apartment	Dwelling Units	83	0.30	25	21	10%	3	22	20%	4	18	31.0%	6	69.0%	12
	2	Residential	**223**	Mid-Rise Apartment	Dwelling Units	69	0.30	21	16	10%	2	19	20%	3	16	31.0%	5	69.0%	11
	3	Residential	**223**	Mid-Rise Apartment	Dwelling Units	102	0.30	31	29	10%	3	28	20%	6	22	31.0%	7	69.0%	15
	4	Residential	**223**	Mid-Rise Apartment	Dwelling Units	107	0.30	33	31	10%	3	30	20%	6	24	31.0%	7	69.0%	16
	5	Residential	**223**	Mid-Rise Apartment	Dwelling Units	100	0.30	30	28	10%	3	27	20%	6	21	31.0%	7	69.0%	15
	6	Residential	**223**	Mid-Rise Apartment	Dwelling Units	134	0.30	41	42	10%	4	38	20%	8	30	31.0%	9	69.0%	20
		Office	**710**	General Office Building	ksf	52	1.56	109	144	10%	14	130	20%	29	101	88.0%	89	12.0%	12
	7	Residential	**223**	Mid-Rise Apartment	Dwelling Units	102	0.30	31	29	10%	3	28	20%	6	22	31.0%	7	69.0%	15
		Office	**710**	General Office Building	ksf	221	1.56	460	454	10%	46	414	20%	91	323	88.0%	284	12.0%	39
	8	Residential	**223**	Mid-Rise Apartment	Dwelling Units	150	0.30	45	49	10%	5	44	20%	10	34	31.0%	11	69.0%	24
		Office	**710**	General Office Building	ksf	347	1.56	722	652	10%	72	650	20%	130	520	88.0%	457	12.0%	62
	9	Residential	**223**	Mid-Rise Apartment	Dwelling Units	104	0.30	32	30	10%	3	29	20%	6	23	31.0%	7	69.0%	16
	10	Residential	**223**	Mid-Rise Apartment	Dwelling Units	116	0.30	35	35	10%	4	31	20%	7	24	31.0%	7	69.0%	17
	11	Residential	**223**	Mid-Rise Apartment	Dwelling Units	137	0.30	42	44	10%	4	40	20%	9	31	31.0%	10	69.0%	22
	12	Residential	**223**	Mid-Rise Apartment	Dwelling Units	104	0.30	32	30	10%	3	29	20%	6	23	31.0%	7	69.0%	16
	13	Residential	**223**	Mid-Rise Apartment	Dwelling Units	120	0.30	36	37	10%	4	33	20%	7	26	31.0%	8	69.0%	18
	14	Residential	**223**	Mid-Rise Apartment	Dwelling Units	896	0.30	269	355	10%	36	319	20%	71	248	31.0%	77	69.0%	171
Total Trip Generation - US 1 Island District															**1506**	**Entering**	**1005**	**Exiting**	**501**
Total Trip Generation (A.M. Peak) - Phase 3															**2517**	**Entering**	**1765**	**Exiting**	**752**

ITE Code	Equation(*)
223	**Y=0.41(X)-13.06**
710	**Y=0.80LN(X)+1.57**

(*)From Trip Generation Manual, 9th Edition, by the Institute of Transportation Engineers (ITE)

2045-Phase 3

MID. Peak Hour Volumes

Development	Lot No.	Land Uses	ITE Land Use Code	Description	Unit	Total Units	Rate/Unit	Trips	Equation	Transit Reduction %	Transit Reduction Trips	Total Trips	Internal Capture %	Internal Capture Trips	Total Trips	Directional Distribution Entering		Directional Distribution Exiting	
Perimeter District	1	Residential	**223**	Mid-Rise Apartment	Dwelling Units	75	0.39	30	25	10%	3	27	20%	5	22	58.0%	13	42.0%	9
		Office	**710**	General Office Building	ksf	34	1.49	67	129	10%	13	116	20%	26	90	17.0%	15	83.0%	75
	2	Residential	**223**	Mid-Rise Apartment	Dwelling Units	75	0.39	30	25	10%	3	27	20%	5	22	58.0%	13	42.0%	9
		Office	**710**	General Office Building	ksf	34	1.49	67	129	10%	13	116	20%	26	90	17.0%	15	83.0%	75
	3	Residential	**223**	Mid-Rise Apartment	Dwelling Units	75	0.39	30	25	10%	3	27	20%	5	22	58.0%	13	42.0%	9
		Office	**710**	General Office Building	ksf	34	1.49	67	129	10%	13	116	20%	26	90	17.0%	15	83.0%	75
	4	Residential	**223**	Mid-Rise Apartment	Dwelling Units	75	0.39	30	25	10%	3	27	20%	5	22	58.0%	13	42.0%	9
		Office	**710**	General Office Building	ksf	34	1.49	67	129	10%	13	116	20%	26	90	17.0%	15	83.0%	75
	5	Residential	**223**	Mid-Rise Apartment	Dwelling Units	75	0.39	30	25	10%	3	27	20%	5	22	58.0%	13	42.0%	9
		Office	**710**	General Office Building	ksf	34	1.49	67	129	10%	13	116	20%	26	90	17.0%	15	83.0%	75
	6	Residential	**223**	Mid-Rise Apartment	Dwelling Units	75	0.39	30	25	10%	3	27	20%	5	22	58.0%	13	42.0%	9
		Office	**710**	General Office Building	ksf	34	1.49	67	129	10%	13	116	20%	26	90	17.0%	15	83.0%	75
Total Trip Generation - Perimeter District															**673**	**Entering**	**168**	**Exiting**	**504**
North Mixed Use District	1	Residential	**223**	Mid-Rise Apartment	Dwelling Units	50	0.39	20	13	10%	2	18	20%	3	15	58.0%	9	42.0%	6
	2	Residential	**223**	Mid-Rise Apartment	Dwelling Units	50	0.39	20	13	10%	2	18	20%	3	15	58.0%	9	42.0%	6
	3	Residential	**223**	Mid-Rise Apartment	Dwelling Units	50	0.39	20	13	10%	2	18	20%	3	15	58.0%	9	42.0%	6
	4	Residential	**223**	Mid-Rise Apartment	Dwelling Units	50	0.39	20	13	10%	2	18	20%	3	15	58.0%	9	42.0%	6
	5	Residential	**223**	Mid-Rise Apartment	Dwelling Units	50	0.39	20	13	10%	2	18	20%	3	15	58.0%	9	42.0%	6
	6	Residential	**223**	Mid-Rise Apartment	Dwelling Units	50	0.39	20	13	10%	2	18	20%	3	15	58.0%	9	42.0%	6
		Office	**710**	General Office Building	ksf	141	1.49	210	237	10%	24	213	20%	47	166	17.0%	28	83.0%	137
	7	Residential	**223**	Mid-Rise Apartment	Dwelling Units	50	0.39	20	13	10%	2	18	20%	3	15	58.0%	9	42.0%	6
		Office	**710**	General Office Building	ksf	145	1.49	217	242	10%	24	218	20%	48	170	17.0%	29	83.0%	141
	8	Residential	**223**	Mid-Rise Apartment	Dwelling Units	50	0.39	20	13	10%	2	18	20%	3	15	58.0%	9	42.0%	6
	9	Residential	**223**	Mid-Rise Apartment	Dwelling Units	50	0.39	20	13	10%	2	18	20%	3	15	58.0%	9	42.0%	6
	10	Residential	**223**	Mid-Rise Apartment	Dwelling Units	50	0.39	20	13	10%	2	18	20%	3	15	58.0%	9	42.0%	6
	11	Residential	**223**	Mid-Rise Apartment	Dwelling Units	50	0.39	20	13	10%	2	18	20%	3	15	58.0%	9	42.0%	6
Total Trip Generation - North Mixed Use District															**505**	**Entering**	**156**	**Exiting**	**344**
US 1 Island District	1	Residential	**223**	Mid-Rise Apartment	Dwelling Units	83	0.39	33	29	10%	3	30	20%	6	24	58.0%	14	42.0%	10
	2	Residential	**223**	Mid-Rise Apartment	Dwelling Units	69	0.39	27	23	10%	2	25	20%	5	20	58.0%	12	42.0%	8
	3	Residential	**223**	Mid-Rise Apartment	Dwelling Units	102	0.39	40	38	10%	4	34	20%	8	27	58.0%	15	42.0%	11
	4	Residential	**223**	Mid-Rise Apartment	Dwelling Units	107	0.39	42	41	10%	4	37	20%	8	29	58.0%	17	42.0%	12
	5	Residential	**223**	Mid-Rise Apartment	Dwelling Units	100	0.39	39	37	10%	4	33	20%	7	26	58.0%	15	42.0%	11
	6	Residential	**223**	Mid-Rise Apartment	Dwelling Units	134	0.39	53	54	10%	5	49	20%	11	38	58.0%	22	42.0%	16
		Office	**710**	General Office Building	ksf	52	1.49	104	157	10%	16	141	20%	31	110	17.0%	19	83.0%	91
	7	Residential	**223**	Mid-Rise Apartment	Dwelling Units	102	0.39	40	38	10%	4	34	20%	8	27	58.0%	15	42.0%	11
		Office	**710**	General Office Building	ksf	221	1.49	439	409	10%	41	398	20%	82	316	17.0%	54	83.0%	263
	8	Residential	**223**	Mid-Rise Apartment	Dwelling Units	150	0.39	59	61	10%	6	55	20%	12	43	58.0%	25	42.0%	18
		Office	**710**	General Office Building	ksf	347	1.49	690	597	10%	60	630	20%	119	511	17.0%	87	83.0%	424
	9	Residential	**223**	Mid-Rise Apartment	Dwelling Units	104	0.39	41	39	10%	4	35	20%	8	27	58.0%	16	42.0%	11
	10	Residential	**223**	Mid-Rise Apartment	Dwelling Units	116	0.39	46	45	10%	5	41	20%	9	32	58.0%	18	42.0%	13
	11	Residential	**223**	Mid-Rise Apartment	Dwelling Units	137	0.39	54	55	10%	6	50	20%	11	39	58.0%	22	42.0%	16
	12	Residential	**223**	Mid-Rise Apartment	Dwelling Units	104	0.39	41	39	10%	4	35	20%	8	27	58.0%	16	42.0%	11
	13	Residential	**223**	Mid-Rise Apartment	Dwelling Units	120	0.39	47	47	10%	5	42	20%	9	33	58.0%	19	42.0%	14
	14	Residential	**223**	Mid-Rise Apartment	Dwelling Units	896	0.39	350	420	10%	42	378	20%	84	294	58.0%	171	42.0%	123
Total Trip Generation - US 1 Island District															**1621**	**Entering**	**557**	**Exiting**	**1063**
Total Trip Generation (MID. Peak) - Phase 3															**2799**	**Entering**	**881**	**Exiting**	**1911**

ITE Code	Equation(*)
223	**Y=0.48(X)-11.07**
710	**Y=1.12(X)+78.45**

(*)From Trip Generation Manual, 9th Edition, by the Institute of Transportation Engineers (ITE)

2045-Phase 3

PM. Peak Hour Volumes

Development	Lot No.	Land Uses	ITE Land Use Code	Description	Unit	Total Units	Rate/Unit	Trips	Equation	Transit Reduction %	Transit Reduction Trips	Total Trips	Internal Capture %	Internal Capture Trips	Total Trips	Directional Distribution Entering		Directional Distribution Exiting	
Perimeter District	1	Residential	**223**	Mid-Rise Apartment	Dwelling Units	75	0.39	30	25	10%	3	27	20%	5	22	58.0%	13	42.0%	9
		Office	**710**	General Office Building	ksf	34	1.49	67	129	10%	13	116	20%	26	90	17.0%	15	83.0%	75
	2	Residential	**223**	Mid-Rise Apartment	Dwelling Units	75	0.39	30	25	10%	3	27	20%	5	22	58.0%	13	42.0%	9
		Office	**710**	General Office Building	ksf	34	1.49	67	129	10%	13	116	20%	26	90	17.0%	15	83.0%	75
	3	Residential	**223**	Mid-Rise Apartment	Dwelling Units	75	0.39	30	25	10%	3	27	20%	5	22	58.0%	13	42.0%	9
		Office	**710**	General Office Building	ksf	34	1.49	67	129	10%	13	116	20%	26	90	17.0%	15	83.0%	75
	4	Residential	**223**	Mid-Rise Apartment	Dwelling Units	75	0.39	30	25	10%	3	27	20%	5	22	58.0%	13	42.0%	9
		Office	**710**	General Office Building	ksf	34	1.49	67	129	10%	13	116	20%	26	90	17.0%	15	83.0%	75
	5	Residential	**223**	Mid-Rise Apartment	Dwelling Units	75	0.39	30	25	10%	3	27	20%	5	22	58.0%	13	42.0%	9
		Office	**710**	General Office Building	ksf	34	1.49	67	129	10%	13	116	20%	26	90	17.0%	15	83.0%	75
	6	Residential	**223**	Mid-Rise Apartment	Dwelling Units	75	0.39	30	25	10%	3	27	20%	5	22	58.0%	13	42.0%	9
		Office	**710**	General Office Building	ksf	34	1.49	67	129	10%	13	116	20%	26	90	17.0%	15	83.0%	75
Total Trip Generation - Perimeter District															**673**	**Entering**	**168**	**Exiting**	**504**
North Mixed Use District	1	Residential	**223**	Mid-Rise Apartment	Dwelling Units	50	0.39	20	13	10%	2	18	20%	3	15	58.0%	9	42.0%	6
	2	Residential	**223**	Mid-Rise Apartment	Dwelling Units	50	0.39	20	13	10%	2	18	20%	3	15	58.0%	9	42.0%	6
	3	Residential	**223**	Mid-Rise Apartment	Dwelling Units	50	0.39	20	13	10%	2	18	20%	3	15	58.0%	9	42.0%	6
	4	Residential	**223**	Mid-Rise Apartment	Dwelling Units	50	0.39	20	13	10%	2	18	20%	3	15	58.0%	9	42.0%	6
	5	Residential	**223**	Mid-Rise Apartment	Dwelling Units	50	0.39	20	13	10%	2	18	20%	3	15	58.0%	9	42.0%	6
	6	Residential	**223**	Mid-Rise Apartment	Dwelling Units	50	0.39	20	13	10%	2	18	20%	3	15	58.0%	9	42.0%	6
		Office	**710**	General Office Building	ksf	141	1.49	210	237	10%	24	213	20%	47	166	17.0%	28	83.0%	137
	7	Residential	**223**	Mid-Rise Apartment	Dwelling Units	50	0.39	20	13	10%	2	18	20%	3	15	58.0%	9	42.0%	6
		Office	**710**	General Office Building	ksf	145	1.49	217	242	10%	24	218	20%	48	170	17.0%	29	83.0%	141
	8	Residential	**223**	Mid-Rise Apartment	Dwelling Units	50	0.39	20	13	10%	2	18	20%	3	15	58.0%	9	42.0%	6
	9	Residential	**223**	Mid-Rise Apartment	Dwelling Units	50	0.39	20	13	10%	2	18	20%	3	15	58.0%	9	42.0%	6
	10	Residential	**223**	Mid-Rise Apartment	Dwelling Units	50	0.39	20	13	10%	2	18	20%	3	15	58.0%	9	42.0%	6
	11	Residential	**223**	Mid-Rise Apartment	Dwelling Units	50	0.39	20	13	10%	2	18	20%	3	15	58.0%	9	42.0%	6
Total Trip Generation - North Mixed Use District															**505**	**Entering**	**156**	**Exiting**	**344**
US 1 Island District	1	Residential	**223**	Mid-Rise Apartment	Dwelling Units	83	0.39	33	29	10%	3	30	20%	6	24	58.0%	14	42.0%	10
	2	Residential	**223**	Mid-Rise Apartment	Dwelling Units	69	0.39	27	23	10%	2	25	20%	5	20	58.0%	12	42.0%	8
	3	Residential	**223**	Mid-Rise Apartment	Dwelling Units	102	0.39	40	38	10%	4	34	20%	8	27	58.0%	15	42.0%	11
	4	Residential	**223**	Mid-Rise Apartment	Dwelling Units	107	0.39	42	41	10%	4	37	20%	8	29	58.0%	17	42.0%	12
	5	Residential	**223**	Mid-Rise Apartment	Dwelling Units	100	0.39	39	37	10%	4	33	20%	7	26	58.0%	15	42.0%	11
	6	Residential	**223**	Mid-Rise Apartment	Dwelling Units	134	0.39	53	54	10%	5	49	20%	11	38	58.0%	22	42.0%	16
		Office	**710**	General Office Building	ksf	52	1.49	104	157	10%	16	141	20%	31	110	17.0%	19	83.0%	91
	7	Residential	**223**	Mid-Rise Apartment	Dwelling Units	102	0.39	40	38	10%	4	34	20%	8	27	58.0%	15	42.0%	11
		Office	**710**	General Office Building	ksf	221	1.49	439	409	10%	41	398	20%	82	316	17.0%	54	83.0%	263
	8	Residential	**223**	Mid-Rise Apartment	Dwelling Units	150	0.39	59	61	10%	6	55	20%	12	43	58.0%	25	42.0%	18
		Office	**710**	General Office Building	ksf	347	1.49	690	597	10%	60	630	20%	119	511	17.0%	87	83.0%	424
	9	Residential	**223**	Mid-Rise Apartment	Dwelling Units	104	0.39	41	39	10%	4	35	20%	8	27	58.0%	16	42.0%	11
	10	Residential	**223**	Mid-Rise Apartment	Dwelling Units	116	0.39	46	45	10%	5	41	20%	9	32	58.0%	18	42.0%	13
	11	Residential	**223**	Mid-Rise Apartment	Dwelling Units	137	0.39	54	55	10%	6	50	20%	11	39	58.0%	22	42.0%	16
	12	Residential	**223**	Mid-Rise Apartment	Dwelling Units	104	0.39	41	39	10%	4	35	20%	8	27	58.0%	16	42.0%	11
	13	Residential	**223**	Mid-Rise Apartment	Dwelling Units	120	0.39	47	47	10%	5	42	20%	9	33	58.0%	19	42.0%	14
	14	Residential	**223**	Mid-Rise Apartment	Dwelling Units	896	0.39	350	420	10%	42	378	20%	84	294	58.0%	171	42.0%	123
Total Trip Generation - US 1 Island District															**1621**	**Entering**	**557**	**Exiting**	**1063**
Total Trip Generation (PM. Peak) - Phase 3															**2799**	**Entering**	**881**	**Exiting**	**1911**

ITE Code	Equation(*)
223	**Y=0.48(X)-11.07**
710	**Y=1.12(X)+78.45**

(*)From Trip Generation Manual, 9th Edition, by the Institute of Transportation Engineers (ITE)

Appendix I

Cardinal Distribution

MIAMI-DADE 2035 DIRECTIONAL DISTRIBUTION SUMMARY											
			CARDINAL DIRECTIONS								
ORIGIN ZONE			NNE	ENE	ESE	SSE	SSW	WSW	WNW	NNW	TOTAL
		PERCENT	10.1	1.01	1.01	23.23	32.32	24.24	2.02	6.06	
1123	3823	TRIPS	1599	266	20	429	529	761	297	729	4,630
		PERCENT	34.54	5.75	0.43	9.27	11.43	16.44	6.41	15.75	
1124	3824	TRIPS	904	137	8	76	177	136	126	296	1,860
		PERCENT	48.6	7.37	0.43	4.09	9.52	7.31	6.77	15.91	
1125	3825	TRIPS	1801	223	365	262	714	580	342	595	4,882
		PERCENT	36.89	4.57	7.48	5.37	14.63	11.88	7.01	12.19	
1126	3826	TRIPS	2649	298	567	391	1133	733	467	966	7,204
		PERCENT	36.77	4.14	7.87	5.43	15.73	10.17	6.48	13.41	
1127	3827	TRIPS	570	73	201	427	1365	615	206	270	3,727
		PERCENT	15.29	1.96	5.39	11.46	36.62	16.5	5.53	7.24	
1128	3828	TRIPS	493	39	15	590	1656	801	435	196	4,225
		PERCENT	11.67	0.92	0.36	13.96	39.2	18.96	10.3	4.64	
1129	3829	TRIPS	2156	170	271	967	5953	2480	1090	1208	14,295
		PERCENT	15.08	1.19	1.9	6.76	41.64	17.35	7.63	8.45	
1130	3830	TRIPS	1977	358	52	340	1429	523	352	667	5,698
		PERCENT	34.7	6.28	0.91	5.97	25.08	9.18	6.18	11.71	
1131	3831	TRIPS	1821	302	55	909	3674	1298	910	618	9,587
		PERCENT	18.99	3.15	0.57	9.48	38.32	13.54	9.49	6.45	
1132	3832	TRIPS	1075	411	92	530	1897	674	518	346	5,543
		PERCENT	19.39	7.41	1.66	9.56	34.22	12.16	9.35	6.24	
1133	3833	TRIPS	1889	322	213	575	3379	2582	1474	1087	11,521
		PERCENT	16.4	2.79	1.85	4.99	29.33	22.41	12.79	9.43	
1134	3834	TRIPS	1084	196	8	95	127	130	307	396	2,343
		PERCENT	46.27	8.37	0.34	4.05	5.42	5.55	13.1	16.9	
1135	3835	TRIPS	768	310	46	120	258	194	337	416	2,449
		PERCENT	31.36	12.66	1.88	4.9	10.53	7.92	13.76	16.99	
1136	3836	TRIPS	471	183	5	326	254	220	106	204	1,769
		PERCENT	26.63	10.34	0.28	18.43	14.36	12.44	5.99	11.53	
1137	3837	TRIPS	693	53	0	65	95	69	87	433	1,495
		PERCENT	46.35	3.55	0	4.35	6.35	4.62	5.82	28.96	
1138	3838	TRIPS	1111	74	0	80	444	250	254	1203	3,416
		PERCENT	32.52	2.17	0	2.34	13	7.32	7.44	35.22	
1139	3839	TRIPS	1664	135	53	101	327	1052	317	1328	4,977
		PERCENT	33.43	2.71	1.06	2.03	6.57	21.14	6.37	26.68	
1140	3840	TRIPS	453	3	0	21	94	273	144	453	1,441
		PERCENT	31.44	0.21	0	1.46	6.52	18.95	9.99	31.44	
1141	3841	TRIPS	217	8	1	15	154	70	121	195	781
		PERCENT	27.78	1.02	0.13	1.92	19.72	8.96	15.49	24.97	
1142	3842	TRIPS	543	109	11	71	583	370	243	672	2,602
		PERCENT	20.87	4.19	0.42	2.73	22.41	14.22	9.34	25.83	
1143	3843	TRIPS	973	58	13	11	512	582	677	1012	3,838
		PERCENT	25.35	1.51	0.34	0.29	13.34	15.16	17.64	26.37	
1144	3844	TRIPS	425	74	23	18	1318	1168	276	346	3,648
		PERCENT	11.65	2.03	0.63	0.49	36.13	32.02	7.57	9.48	
1145	3845	TRIPS	1474	80	119	0	1103	1508	1553	1979	7,816
		PERCENT	18.86	1.02	1.52	0	14.11	19.29	19.87	25.32	
1146	3846	TRIPS	922	41	3	291	247	481	485	860	3,330
		PERCENT	27.69	1.23	0.09	8.74	7.42	14.44	14.56	25.83	
1147	3847	TRIPS	574	65	1	101	120	338	224	448	1,871
		PERCENT	30.68	3.47	0.05	5.4	6.41	18.07	11.97	23.94	
1148	3848	TRIPS	399	14	3	22	70	240	338	373	1,459
		PERCENT	27.35	0.96	0.21	1.51	4.8	16.45	23.17	25.57	
1149	3849	TRIPS	815	265	62	98	248	373	208	262	2,331
		PERCENT	34.96	11.37	2.66	4.2	10.64	16	8.92	11.24	
1150	3850	TRIPS	1567	751	206	251	868	684	507	1289	6,123
		PERCENT	25.59	12.27	3.36	4.1	14.18	11.17	8.28	21.05	
1151	3851	TRIPS	1331	808	45	609	1303	1372	432	1276	7,176
		PERCENT	18.55	11.26	0.63	8.49	18.16	19.12	6.02	17.78	
1152	3852	TRIPS	224	173	26	68	310	319	206	122	1,448
		PERCENT	15.47	11.95	1.8	4.7	21.41	22.03	14.23	8.43	
1153	3853	TRIPS	3037	2193	427	942	3336	3151	1830	1625	16,541
		PERCENT	18.36	13.26	2.58	5.69	20.17	19.05	11.06	9.82	
1154	3854	TRIPS	1559	1307	155	204	692	571	970	731	6,189
		PERCENT	25.19	21.12	2.5	3.3	11.18	9.23	15.67	11.81	
1155	3855	TRIPS	3560	1313	213	352	2749	3016	2492	2313	16,008
		PERCENT	22.24	8.2	1.33	2.2	17.17	18.84	15.57	14.45	
1156	3856	TRIPS	528	147	21	152	922	759	1012	641	4,182

Appendix J

2025 Total Traffic

2035 Total Traffic

2045 Total Traffic

Synchro Output Sheets

HCM Unsignalized Intersection Capacity Analysis
1: SW 97th Ave. & SW 174th St.

2/18/2015

Movement	EBL	EBT	EBR	WBL	WBT	WBR	NBL	NBT	NBR	SBL	SBT	SBR
Lane Configurations												
Sign Control		Stop			Stop			Stop			Stop	
Volume (vph)	3	129	25	26	96	0	20	14	11	23	69	1
Peak Hour Factor	0.84	0.84	0.84	0.84	0.84	0.84	0.84	0.84	0.84	0.84	0.84	0.84
Hourly flow rate (vph)	4	154	30	31	114	0	24	17	13	27	82	1

Direction, Lane #	EB 1	WB 1	NB 1	SB 1
Volume Total (vph)	187	145	54	111
Volume Left (vph)	4	31	24	27
Volume Right (vph)	30	0	13	1
Hadj (s)	-0.06	0.08	-0.02	0.08
Departure Headway (s)	4.4	4.6	4.8	4.8
Degree Utilization, x	0.23	0.19	0.07	0.15
Capacity (veh/h)	779	740	690	691
Control Delay (s)	8.7	8.7	8.2	8.7
Approach Delay (s)	8.7	8.7	8.2	8.7
Approach LOS	A	A	A	A

Intersection Summary			
Delay	8.6		
HCM Level of Service	A		
Intersection Capacity Utilization	30.4%	ICU Level of Service	A
Analysis Period (min)	15		

Lane Group	EBL	NBT	SBT	NET
Lane Group Flow (vph)	86	340	89	3915
v/c Ratio	1.01	1.06	0.33	1.10
Control Delay	176.3	118.3	67.3	75.9
Queue Delay	0.0	0.0	0.0	0.0
Total Delay	176.3	118.3	67.3	75.9
Queue Length 50th (ft)	~99	~341	89	~1803
Queue Length 95th (ft)	#204	#488	138	#1611
Internal Link Dist (ft)	257	1041	665	1300
Turn Bay Length (ft)				
Base Capacity (vph)	85	320	272	3560
Starvation Cap Reductn	0	0	0	0
Spillback Cap Reductn	0	0	0	0
Storage Cap Reductn	0	0	0	0
Reduced v/c Ratio	1.01	1.06	0.33	1.10

Intersection Summary

~ Volume exceeds capacity, queue is theoretically infinite.
Queue shown is maximum after two cycles.

95th percentile volume exceeds capacity, queue may be longer.
Queue shown is maximum after two cycles.

Movement	EBL	EBR	NBL	NBT	NBR	SBL	SBT	NEL2	NEL	NET	NER
Lane Configurations											
Volume (vph)	1	71	3	11	271	3	71	1	2	3280	6
Ideal Flow (vphpl)	1900	1900	1900	1900	1900	1900	1900	1900	1900	1900	1900
Total Lost time (s)	5.0			5.0			5.0			5.0	
Lane Util. Factor	1.00			1.00			1.00			0.91	
Frt	0.87			0.87			1.00			1.00	
Flt Protected	1.00			1.00			1.00			1.00	
Satd. Flow (prot)	1613			1623			1859			5084	
Flt Permitted	1.00			1.00			0.92			1.00	
Satd. Flow (perm)	1613			1620			1715			5084	
Peak-hour factor, PHF	0.84	0.84	0.84	0.84	0.84	0.84	0.84	0.84	0.84	0.84	0.84
Adj. Flow (vph)	1	85	4	13	323	4	85	1	2	3905	7
RTOR Reduction (vph)	0	0	0	63	0	0	0	0	0	0	0
Lane Group Flow (vph)	86	0	0	277	0	0	89	0	0	3915	0
Turn Type	NA		Perm	NA		Perm	NA	Perm	Perm	NA	
Protected Phases	3			4			8			6	
Permitted Phases			4			8		6	6		
Actuated Green, G (s)	9.0			27.0			27.0			119.0	
Effective Green, g (s)	9.0			27.0			27.0			119.0	
Actuated g/C Ratio	0.05			0.16			0.16			0.70	
Clearance Time (s)	5.0			5.0			5.0			5.0	
Vehicle Extension (s)	3.0			3.0			3.0			3.0	
Lane Grp Cap (vph)	85			257			272			3559	
v/s Ratio Prot	c0.05										
v/s Ratio Perm				c0.17			0.05			0.77	
v/c Ratio	1.01			1.08			0.33			1.10	
Uniform Delay, d1	80.5			71.5			63.4			25.5	
Progression Factor	1.00			1.00			1.00			1.00	
Incremental Delay, d2	100.9			78.3			3.2			50.0	
Delay (s)	181.4			149.8			66.6			75.5	
Level of Service	F			F			E			E	
Approach Delay (s)	181.4			149.8			66.6			75.5	
Approach LOS	F			F			E			E	

Intersection Summary			
HCM Average Control Delay	83.1	HCM Level of Service	F
HCM Volume to Capacity ratio	1.09		
Actuated Cycle Length (s)	170.0	Sum of lost time (s)	15.0
Intersection Capacity Utilization	100.5%	ICU Level of Service	G
Analysis Period (min)	15		
c Critical Lane Group			

Movement	EBL	EBR	NBL	NBT	SBT	SBR
Lane Configurations						
Volume (veh/h)	40	33	34	302	55	43
Sign Control	Stop			Free	Free	
Grade	0%			0%	0%	
Peak Hour Factor	0.90	0.90	0.90	0.90	0.90	0.90
Hourly flow rate (vph)	44	37	38	336	61	48
Pedestrians						
Lane Width (ft)						
Walking Speed (ft/s)						
Percent Blockage						
Right turn flare (veh)						
Median type				None	None	
Median storage veh)						
Upstream signal (ft)					1121	
pX, platoon unblocked						
vC, conflicting volume	496	85	109			
vC1, stage 1 conf vol						
vC2, stage 2 conf vol						
vCu, unblocked vol	496	85	109			
tC, single (s)	6.4	6.2	4.1			
tC, 2 stage (s)						
tF (s)	3.5	3.3	2.2			
p0 queue free %	91	96	97			
cM capacity (veh/h)	519	974	1482			

Direction, Lane #	EB 1	NB 1	SB 1
Volume Total	81	373	109
Volume Left	44	38	0
Volume Right	37	0	48
cSH	658	1482	1700
Volume to Capacity	0.12	0.03	0.06
Queue Length 95th (ft)	10	2	0
Control Delay (s)	11.2	1.0	0.0
Lane LOS	B	A	
Approach Delay (s)	11.2	1.0	0.0
Approach LOS	B		

Intersection Summary			
Average Delay	2.3		
Intersection Capacity Utilization	35.3%	ICU Level of Service	A
Analysis Period (min)	15		

Movement	WBL	WBR	NBT	NBR	SBL	SBT
Lane Configurations						
Volume (veh/h)	63	47	290	35	13	54
Sign Control	Stop		Free			Free
Grade	0%		0%			0%
Peak Hour Factor	0.89	0.89	0.89	0.89	0.89	0.89
Hourly flow rate (vph)	71	53	326	39	15	61
Pedestrians						
Lane Width (ft)						
Walking Speed (ft/s)						
Percent Blockage						
Right turn flare (veh)						
Median type			None			None
Median storage veh)						
Upstream signal (ft)						
pX, platoon unblocked						
vC, conflicting volume	435	346			365	
vC1, stage 1 conf vol						
vC2, stage 2 conf vol						
vCu, unblocked vol	435	346			365	
tC, single (s)	6.4	6.2			4.1	
tC, 2 stage (s)						
tF (s)	3.5	3.3			2.2	
p0 queue free %	88	92			99	
cM capacity (veh/h)	571	697			1193	

Direction, Lane #	WB 1	NB 1	SB 1
Volume Total	124	365	75
Volume Left	71	0	15
Volume Right	53	39	0
cSH	619	1700	1193
Volume to Capacity	0.20	0.21	0.01
Queue Length 95th (ft)	18	0	1
Control Delay (s)	12.3	0.0	1.6
Lane LOS	B		A
Approach Delay (s)	12.3	0.0	1.6
Approach LOS	B		

Intersection Summary			
Average Delay	2.9		
Intersection Capacity Utilization	30.4%	ICU Level of Service	A
Analysis Period (min)	15		

Movement	EBL	EBR	NBL	NBT	SBT	SBR
Lane Configurations						
Volume (veh/h)	21	24	16	326	76	40
Sign Control	Stop			Free	Free	
Grade	0%			0%	0%	
Peak Hour Factor	0.95	0.95	0.95	0.95	0.95	0.95
Hourly flow rate (vph)	22	25	17	343	80	42
Pedestrians						
Lane Width (ft)						
Walking Speed (ft/s)						
Percent Blockage						
Right turn flare (veh)						
Median type				None	None	
Median storage veh)						
Upstream signal (ft)				1230		
pX, platoon unblocked						
vC, conflicting volume	478	101	122			
vC1, stage 1 conf vol						
vC2, stage 2 conf vol						
vCu, unblocked vol	478	101	122			
tC, single (s)	6.4	6.2	4.1			
tC, 2 stage (s)						
tF (s)	3.5	3.3	2.2			
p0 queue free %	96	97	99			
cM capacity (veh/h)	540	954	1465			

Direction, Lane #	EB 1	NB 1	SB 1
Volume Total	47	360	122
Volume Left	22	17	0
Volume Right	25	0	42
cSH	703	1465	1700
Volume to Capacity	0.07	0.01	0.07
Queue Length 95th (ft)	5	1	0
Control Delay (s)	10.5	0.5	0.0
Lane LOS	B	A	
Approach Delay (s)	10.5	0.5	0.0
Approach LOS	B		

Intersection Summary			
Average Delay	1.2		
Intersection Capacity Utilization	34.7%	ICU Level of Service	A
Analysis Period (min)	15		

Movement	EBL	EBT	EBR	WBL	WBT	WBR	NBL	NBT	NBR	SBL	SBT	SBR
Lane Configurations												
Volume (veh/h)	19	11	9	41	21	16	11	311	12	4	87	6
Sign Control		Stop			Stop			Free			Free	
Grade		0%			0%			0%			0%	
Peak Hour Factor	0.93	0.93	0.93	0.93	0.93	0.93	0.93	0.93	0.93	0.93	0.93	0.93
Hourly flow rate (vph)	20	12	10	44	23	17	12	334	13	4	94	6
Pedestrians												
Lane Width (ft)												
Walking Speed (ft/s)												
Percent Blockage												
Right turn flare (veh)												
Median type								None			None	
Median storage veh)												
Upstream signal (ft)								904				
pX, platoon unblocked	0.95	0.95		0.95	0.95	0.95				0.95		
vC, conflicting volume	498	476	97	485	473	341	100			347		
vC1, stage 1 conf vol												
vC2, stage 2 conf vol												
vCu, unblocked vol	443	419	97	429	416	276	100			283		
tC, single (s)	7.1	6.5	6.2	7.1	6.5	6.2	4.1			4.1		
tC, 2 stage (s)												
tF (s)	3.5	4.0	3.3	3.5	4.0	3.3	2.2			2.2		
p0 queue free %	96	98	99	91	95	98	99			100		
cM capacity (veh/h)	465	492	959	489	494	722	1493			1212		

Direction, Lane #	EB 1	WB 1	NB 1	SB 1
Volume Total	42	84	359	104
Volume Left	20	44	12	4
Volume Right	10	17	13	6
cSH	537	525	1493	1212
Volume to Capacity	0.08	0.16	0.01	0.00
Queue Length 95th (ft)	6	14	1	0
Control Delay (s)	12.3	13.2	0.3	0.4
Lane LOS	B	B	A	A
Approach Delay (s)	12.3	13.2	0.3	0.4
Approach LOS	B	B		

Intersection Summary			
Average Delay	3.0		
Intersection Capacity Utilization	33.5%	ICU Level of Service	A
Analysis Period (min)	15		

Movement	EBL	EBT	EBR	WBL	WBT	WBR	NBL	NBT	NBR	SBL	SBT	SBR
Lane Configurations												
Volume (veh/h)	11	12	2	0	4	1	2	321	6	0	129	5
Sign Control		Stop			Stop			Free			Free	
Grade		0%			0%			0%			0%	
Peak Hour Factor	0.91	0.91	0.91	0.91	0.91	0.91	0.91	0.91	0.91	0.91	0.91	0.91
Hourly flow rate (vph)	12	13	2	0	4	1	2	353	7	0	142	5
Pedestrians												
Lane Width (ft)												
Walking Speed (ft/s)												
Percent Blockage												
Right turn flare (veh)												
Median type								None			None	
Median storage veh)												
Upstream signal (ft)								601				
pX, platoon unblocked	0.89	0.89		0.89	0.89	0.89				0.89		
vC, conflicting volume	508	508	145	514	508	356	147			359		
vC1, stage 1 conf vol												
vC2, stage 2 conf vol												
vCu, unblocked vol	388	388	145	394	387	217	147			221		
tC, single (s)	7.1	6.5	6.2	7.1	6.5	6.2	4.1			4.1		
tC, 2 stage (s)												
tF (s)	3.5	4.0	3.3	3.5	4.0	3.3	2.2			2.2		
p0 queue free %	98	97	100	100	99	100	100			100		
cM capacity (veh/h)	504	487	903	492	487	733	1435			1202		

Direction, Lane #	EB 1	WB 1	NB 1	SB 1
Volume Total	27	5	362	147
Volume Left	12	0	2	0
Volume Right	2	1	7	5
cSH	514	522	1435	1202
Volume to Capacity	0.05	0.01	0.00	0.00
Queue Length 95th (ft)	4	1	0	0
Control Delay (s)	12.4	12.0	0.1	0.0
Lane LOS	B	B	A	
Approach Delay (s)	12.4	12.0	0.1	0.0
Approach LOS	B	B		

Intersection Summary			
Average Delay	0.8		
Intersection Capacity Utilization	33.5%	ICU Level of Service	A
Analysis Period (min)	15		

Movement	EBL	EBT	EBR	WBL	WBT	WBR	NBL	NBT	NBR	SBL	SBT	SBR
Lane Configurations												
Volume (veh/h)	17	9	31	0	1	1	16	302	3	1	106	28
Sign Control		Stop			Stop			Free			Free	
Grade		0%			0%			0%			0%	
Peak Hour Factor	0.94	0.94	0.94	0.94	0.94	0.94	0.94	0.94	0.94	0.94	0.94	0.94
Hourly flow rate (vph)	18	10	33	0	1	1	17	321	3	1	113	30
Pedestrians												
Lane Width (ft)												
Walking Speed (ft/s)												
Percent Blockage												
Right turn flare (veh)												
Median type								None			None	
Median storage veh)												
Upstream signal (ft)								300				
pX, platoon unblocked	0.85	0.85		0.85	0.85	0.85				0.85		
vC, conflicting volume	488	488	128	524	502	323	143			324		
vC1, stage 1 conf vol												
vC2, stage 2 conf vol												
vCu, unblocked vol	312	312	128	354	327	118	143			119		
tC, single (s)	7.1	6.5	6.2	7.1	6.5	6.2	4.1			4.1		
tC, 2 stage (s)												
tF (s)	3.5	4.0	3.3	3.5	4.0	3.3	2.2			2.2		
p0 queue free %	97	98	96	100	100	100	99			100		
cM capacity (veh/h)	539	507	922	481	497	796	1440			1250		

Direction, Lane #	EB 1	WB 1	NB 1	SB 1
Volume Total	61	2	341	144
Volume Left	18	0	17	1
Volume Right	33	1	3	30
cSH	687	612	1440	1250
Volume to Capacity	0.09	0.00	0.01	0.00
Queue Length 95th (ft)	7	0	1	0
Control Delay (s)	10.7	10.9	0.5	0.1
Lane LOS	B	B	A	A
Approach Delay (s)	10.7	10.9	0.5	0.1
Approach LOS	B	B		

Intersection Summary			
Average Delay	1.5		
Intersection Capacity Utilization	43.5%	ICU Level of Service	A
Analysis Period (min)	15		

Lane Group	EBL	EBT	EBR	WBL	WBT	NBL	NBT	SBL	SBT
Lane Group Flow (vph)	72	445	112	145	582	232	591	16	107
v/c Ratio	0.15	0.75	0.23	0.32	0.46	0.43	0.68	0.04	0.17
Control Delay	14.4	38.7	7.6	16.1	27.2	24.5	29.8	20.3	34.1
Queue Delay	0.0	0.0	0.0	0.0	0.0	0.0	0.0	0.0	0.0
Total Delay	14.4	38.7	7.6	16.1	27.2	24.5	29.8	20.3	34.1
Queue Length 50th (ft)	21	205	0	43	147	102	125	6	29
Queue Length 95th (ft)	51	356	44	93	231	176	194	21	56
Internal Link Dist (ft)		1915			531		229		156
Turn Bay Length (ft)	130			95		155		130	
Base Capacity (vph)	510	727	594	440	1506	540	1036	390	815
Starvation Cap Reductn	0	0	0	0	0	0	0	0	0
Spillback Cap Reductn	0	0	0	0	0	0	0	0	0
Storage Cap Reductn	0	0	0	0	0	0	0	0	0
Reduced v/c Ratio	0.14	0.61	0.19	0.33	0.39	0.43	0.57	0.04	0.13

Intersection Summary

Movement	EBL	EBT	EBR	WBL	WBT	WBR	NBL	NBT	NBR	SBL	SBT	SBR
Lane Configurations												
Volume (vph)	68	423	106	138	499	54	220	293	269	15	93	9
Ideal Flow (vphpl)	1900	1900	1900	1900	1900	1900	1900	1900	1900	1900	1900	1900
Total Lost time (s)	3.0	3.0	5.0	3.0	3.0		3.0	3.0		3.0	3.0	
Lane Util. Factor	1.00	1.00	1.00	1.00	0.95		1.00	0.95		1.00	0.95	
Frt	1.00	1.00	0.85	1.00	0.99		1.00	0.93		1.00	0.99	
Flt Protected	0.95	1.00	1.00	0.95	1.00		0.95	1.00		0.95	1.00	
Satd. Flow (prot)	1770	1863	1583	1770	3487		1770	3285		1770	3495	
Flt Permitted	0.38	1.00	1.00	0.40	1.00		0.68	1.00		0.37	1.00	
Satd. Flow (perm)	715	1863	1583	740	3487		1275	3285		694	3495	
Peak-hour factor, PHF	0.95	0.95	0.95	0.95	0.95	0.95	0.95	0.95	0.95	0.95	0.95	0.95
Adj. Flow (vph)	72	445	112	145	525	57	232	308	283	16	98	9
RTOR Reduction (vph)	0	0	84	0	7	0	0	144	0	0	6	0
Lane Group Flow (vph)	72	445	28	145	575	0	232	447	0	16	101	0
Turn Type	custom	NA	custom	custom	NA		custom	NA		custom	NA	
Protected Phases	1 2	2 4		1 3	3 4		5 6	6 8		5 7	7 8	
Permitted Phases	4		4	4			8			8		
Actuated Green, G (s)	41.0	30.0	25.8	39.0	34.0		32.9	18.4		26.4	17.9	
Effective Green, g (s)	41.0	30.0	25.8	39.0	34.0		32.9	18.4		26.4	17.9	
Actuated g/C Ratio	0.40	0.29	0.25	0.38	0.33		0.32	0.18		0.26	0.17	
Clearance Time (s)			5.0									
Vehicle Extension (s)			3.0									
Lane Grp Cap (vph)	441	544	397	413	1153		503	588		316	609	
v/s Ratio Prot	0.02	c0.24		c0.05	c0.16		c0.09	c0.14		0.01	c0.03	
v/s Ratio Perm	0.04		0.02	0.09			0.06			0.01		
v/c Ratio	0.16	0.82	0.07	0.35	0.50		0.46	0.76		0.05	0.17	
Uniform Delay, d1	19.4	33.9	29.4	21.7	27.6		27.4	40.1		28.7	36.1	
Progression Factor	1.00	1.00	1.00	1.00	1.00		1.00	1.00		1.00	1.00	
Incremental Delay, d2	0.2	9.3	0.1	0.5	0.3		0.7	5.6		0.1	0.1	
Delay (s)	19.6	43.2	29.4	22.3	27.9		28.0	45.7		28.7	36.2	
Level of Service	B	D	C	C	C		C	D		C	D	
Approach Delay (s)		38.0			26.8			40.7			35.3	
Approach LOS		D			C			D			D	

Intersection Summary			
HCM Average Control Delay	35.3	HCM Level of Service	D
HCM Volume to Capacity ratio	0.64		
Actuated Cycle Length (s)	102.8	Sum of lost time (s)	24.0
Intersection Capacity Utilization	58.8%	ICU Level of Service	B
Analysis Period (min)	15		
c Critical Lane Group			

Movement	EBL	EBT	WBT	WBR	SBL	SBR
Lane Configurations						
Volume (veh/h)	294	525	661	36	29	73
Sign Control		Free	Free		Stop	
Grade		0%	0%		0%	
Peak Hour Factor	0.88	0.88	0.88	0.88	0.88	0.88
Hourly flow rate (vph)	334	597	751	41	33	83
Pedestrians						
Lane Width (ft)						
Walking Speed (ft/s)						
Percent Blockage						
Right turn flare (veh)						
Median type		None	None			
Median storage veh)						
Upstream signal (ft)		611				
pX, platoon unblocked					0.86	
vC, conflicting volume	792				2036	772
vC1, stage 1 conf vol						
vC2, stage 2 conf vol						
vCu, unblocked vol	792				2122	772
tC, single (s)	4.1				6.4	6.2
tC, 2 stage (s)						
tF (s)	2.2				3.5	3.3
p0 queue free %	60				0	79
cM capacity (veh/h)	829				28	400

Direction, Lane #	EB 1	EB 2	WB 1	SB 1
Volume Total	334	597	792	116
Volume Left	334	0	0	33
Volume Right	0	0	41	83
cSH	829	1700	1700	85
Volume to Capacity	0.40	0.35	0.47	1.37
Queue Length 95th (ft)	49	0	0	221
Control Delay (s)	12.2	0.0	0.0	312.9
Lane LOS	B			F
Approach Delay (s)	4.4		0.0	312.9
Approach LOS				F

Intersection Summary			
Average Delay	22.0		
Intersection Capacity Utilization	69.4%	ICU Level of Service	C
Analysis Period (min)	15		

Lane Group	EBL	EBT	WBL	WBT	NBL	NBT	SBL	SBT
Lane Group Flow (vph)	477	600	179	641	64	2265	127	1732
v/c Ratio	1.04	0.66	0.63	1.07	0.60	1.08	0.98	0.81
Control Delay	112.5	60.3	75.9	121.9	48.0	93.5	111.3	46.6
Queue Delay	0.0	0.0	0.0	0.0	0.0	0.0	0.0	0.0
Total Delay	112.5	60.3	75.9	121.9	48.0	93.5	111.3	46.6
Queue Length 50th (ft)	~572	316	206	~434	37	~1032	91	613
Queue Length 95th (ft)	#715	355	281	#509	66	#980	#210	607
Internal Link Dist (ft)		364		1915		469		768
Turn Bay Length (ft)			286		160		130	
Base Capacity (vph)	458	915	284	597	107	2089	129	2130
Starvation Cap Reductn	0	0	0	0	0	0	0	0
Spillback Cap Reductn	0	0	0	0	0	0	0	0
Storage Cap Reductn	0	0	0	0	0	0	0	0
Reduced v/c Ratio	1.04	0.66	0.63	1.07	0.60	1.08	0.98	0.81

Intersection Summary

~ Volume exceeds capacity, queue is theoretically infinite.
Queue shown is maximum after two cycles.

95th percentile volume exceeds capacity, queue may be longer.
Queue shown is maximum after two cycles.

Movement	EBL	EBT	EBR	WBL	WBT	WBR	NBL	NBT	NBR	SBL	SBT	SBR
Lane Configurations												
Volume (vph)	401	500	4	167	516	6	54	1861	42	107	1308	147
Ideal Flow (vphpl)	1900	1900	1900	1900	1900	1900	1900	1900	1900	1900	1900	1900
Total Lost time (s)	5.0	5.0		5.0	5.0		3.0	5.0		3.0	5.0	
Lane Util. Factor	1.00	0.95		0.91	0.91		1.00	0.91		1.00	0.91	
Frt	1.00	1.00		1.00	1.00		1.00	1.00		1.00	0.98	
Flt Protected	0.95	1.00		0.95	1.00		0.95	1.00		0.95	1.00	
Satd. Flow (prot)	1770	3535		1610	3379		1770	5068		1770	5008	
Flt Permitted	0.95	1.00		0.95	1.00		0.06	1.00		0.06	1.00	
Satd. Flow (perm)	1770	3535		1610	3379		106	5068		103	5008	
Peak-hour factor, PHF	0.84	0.84	0.84	0.84	0.84	0.84	0.84	0.84	0.84	0.84	0.84	0.84
Adj. Flow (vph)	477	595	5	199	614	7	64	2215	50	127	1557	175
RTOR Reduction (vph)	0	0	0	0	1	0	0	1	0	0	8	0
Lane Group Flow (vph)	477	600	0	179	640	0	64	2264	0	127	1724	0
Turn Type	Split	NA		Split	NA		pm+pt	NA		pm+pt	NA	
Protected Phases	4	4		8	8		5	2		1	6	
Permitted Phases							2			6		
Actuated Green, G (s)	44.0	44.0		30.0	30.0		76.0	70.0		80.0	72.0	
Effective Green, g (s)	44.0	44.0		30.0	30.0		76.0	70.0		80.0	72.0	
Actuated g/C Ratio	0.26	0.26		0.18	0.18		0.45	0.41		0.47	0.42	
Clearance Time (s)	5.0	5.0		5.0	5.0		3.0	5.0		3.0	5.0	
Vehicle Extension (s)	3.0	3.0		3.0	3.0		3.0	3.0		3.0	3.0	
Lane Grp Cap (vph)	458	915		284	596		106	2087		127	2121	
v/s Ratio Prot	c0.27	0.17		0.11	c0.19		0.02	c0.45		c0.05	0.34	
v/s Ratio Perm							0.25			0.42		
v/c Ratio	1.04	0.66		0.63	1.07		0.60	1.08		1.00	0.81	
Uniform Delay, d1	63.0	56.2		64.9	70.0		34.9	50.0		47.9	43.1	
Progression Factor	1.00	1.00		1.00	1.00		1.00	1.00		1.00	1.00	
Incremental Delay, d2	53.3	1.7		4.5	58.4		9.3	47.1		79.9	2.5	
Delay (s)	116.3	57.9		69.4	128.4		44.2	97.1		127.7	45.6	
Level of Service	F	E		E	F		D	F		F	D	
Approach Delay (s)		83.8			115.5			95.6			51.2	
Approach LOS		F			F			F			D	

Intersection Summary			
HCM Average Control Delay	82.6	HCM Level of Service	F
HCM Volume to Capacity ratio	1.09		
Actuated Cycle Length (s)	170.0	Sum of lost time (s)	21.0
Intersection Capacity Utilization	95.2%	ICU Level of Service	F
Analysis Period (min)	15		
c Critical Lane Group			

Movement	EBL	EBT	EBR	WBL	WBT	WBR	NBL	NBT	NBR	SBL	SBT	SBR
Lane Configurations												
Volume (vph)	401	500	4	167	516	6	54	1861	42	107	1308	147
Movement Number	7	4	14	3	8	18	5	2	12	1	6	16
Initial Queue, veh	0	0	0	0	0	0	0	0	0	0	0	0
Ped-Bike Adj. Factor (A_pbT)	1.00		1.00	1.00		1.00	1.00		1.00	1.00		1.00
Parking, Bus Adj. Factors	1.00	1.00	1.00	1.00	1.00	1.00	1.00	1.00	1.00	1.00	1.00	1.00
Adj. Sat. Flow Rate, veh/h/ln	1863	1863	1863	1863	1863	1863	1863	1863	1863	1863	1863	1863
Lanes	1	2	0	1	2	0	1	3	0	1	3	0
Lane Assignment												
Capacity, veh/h	459	955	8	313	649	8	136	2107	47	126	1984	223
Proportion Arriving On Green	0.26	0.26	0.26	0.18	0.18	0.18	0.03	0.41	0.41	0.05	0.43	0.43
Movement Delay, s/veh	115.7	58.2	58.2	69.1	105.0	105.2	38.2	88.4	97.7	133.7	44.8	47.4
Movement LOS	F	E	E	E	F	F	D	F	F	F	D	D
Approach Volume, veh/h		1077			820			2330			1860	
Approach Delay, s/veh		83.6			96.4			90.3			51.7	
Approach LOS		F			F			F			D	

Timer:	1	2	3	4	5	6	7	8
Assigned Phase	1	2	8	4	5	6		
Case No	1.1	4.0	10.0	10.0	1.1	4.0		
Phase Duration (G+Y+Rc), s	11.00	75.00	35.00	49.00	8.30	77.70		
Change Period (Y+Rc), s	3.00	5.00	5.00	5.00	3.00	5.00		
Max. Allowable Headway (MAH), s	4.00	3.92	3.93	3.95	4.00	3.92		
Maximum Green Setting (Gmax), s	8.00	70.00	30.00	44.00	6.00	72.00		
Max. Queue Clearance Time (g_c+I1), s	10.00	72.00	30.10	46.00	5.56	51.24		
Green Extension Time (g_e), s	0.00	0.00	0.00	0.00	0.00	17.78		
Probability of Phase Call (p_c)	0.998	1.000	1.000	1.000	0.952	1.000		
Probability of Max Out (p_x)	1.000	1.000	1.000	1.000	1.000	0.853		

Left-Turn Movement Data					
Assigned Movement	1		3	7	5
Mvmt. Sat Flow, veh/h	1774.04		1774.04	1774.04	1774.04

Through Movement Data					
Assigned Movement		2	8	4	6
Mvmt. Sat Flow, veh/h		5117.37	3675.23	3690.76	4640.20

Right-Turn Movement Data					
Assigned Movement		12	18	14	16
Mvmt. Sat Flow, veh/h		115.24	42.72	29.52	520.83

Left Lane Group Data								
Assigned Movement	1	0	3	7	5	0	0	0
Lane Assignment	L (Pr/Pm)		L		LL (Pr/Pm)			
Lanes in Group	1	0	1	1	1	0	0	0
Group Volume (v), veh/h	127.4	0.0	198.8	477.4	64.3	0.0	0.0	0.0
Group Sat. Flow (s), veh/h/ln	1774.0	0.0	1774.0	1774.0	1774.0	0.0	0.0	0.0
Queue Serve Time (g_s), s	8.0	0.0	17.7	44.0	3.6	0.0	0.0	0.0
Cycle Queue Clear Time (g_c), s	8.0	0.0	17.7	44.0	3.6	0.0	0.0	0.0

Perm LT Sat Flow Rate (s_l), veh/h/ln	165.1	0.0	1774.0	1774.0	278.5	0.0	0.0	0.0
Shared LT Sat Flow (s_sh), veh/h/ln	0.0	0.0	0.0	0.0	0.0	0.0	0.0	0.0
Perm LT Eff. Green (g_p), s	74.4	0.0	0.0	0.0	70.0	0.0	0.0	0.0
Perm LT Serve Time (g_u), s	0.0	0.0	0.0	0.0	23.5	0.0	0.0	0.0
Perm LT Que Serve Time (g_ps), s	0.0	0.0	0.0	0.0	14.0	0.0	0.0	0.0
Time to First Blk (g_f), s	0.0	0.0	0.0	0.0	0.0	0.0	0.0	0.0
Serve Time pre Blk (g_fs), s	0.0	0.0	0.0	0.0	0.0	0.0	0.0	0.0
Proportion LT Inside Lane (P_L)	1.000	0.000	1.000	1.000	1.000	0.000	0.000	0.000
Lane Group Capacity (c), veh/h	125.8	0.0	313.1	459.2	136.1	0.0	0.0	0.0
Volume-to-Capacity Ratio (X)	1.012	0.000	0.635	1.040	0.472	0.000	0.000	0.000
Available Capacity (c_a), veh/h	125.8	0.0	313.1	459.2	143.4	0.0	0.0	0.0
Upstream Filter Factor (I)	1.000	0.000	1.000	1.000	1.000	0.000	0.000	0.000
Uniform Delay (d1), s/veh	50.2	0.0	64.9	63.0	35.6	0.0	0.0	0.0
Incremental Delay (d2), s/veh	83.5	0.0	4.2	52.7	2.5	0.0	0.0	0.0
Initial Queue Delay (d3), s/veh	0.0	0.0	0.0	0.0	0.0	0.0	0.0	0.0
Control Delay (d), s/veh	133.7	0.0	69.1	115.7	38.2	0.0	0.0	0.0
First-Term Queue (Q1), veh/ln	3.6	0.0	8.1	19.9	1.6	0.0	0.0	0.0
Second-Term Queue (Q2), veh/ln	2.9	0.0	0.4	6.7	0.1	0.0	0.0	0.0
Third-Term Queue (Q3), veh/ln	0.0	0.0	0.0	0.0	0.0	0.0	0.0	0.0
Percentile bk-of-que factor (f_B%)	1.000	0.000	1.000	1.000	1.000	0.000	0.000	0.000
Percentile Back of Queue (Q%), veh/ln	6.5	0.0	8.4	26.6	1.7	0.0	0.0	0.0
Percentile Storage Ratio (RQ%)	1.26	0.00	0.75	1.96	0.26	0.00	0.00	0.00
Initial Queue (Qb), veh	0.0	0.0	0.0	0.0	0.0	0.0	0.0	0.0
Final (Residual) Queue (Qe), veh	0.4	0.0	0.0	4.6	0.0	0.0	0.0	0.0
Saturated Delay (ds), s/veh	0.0	0.0	0.0	0.0	0.0	0.0	0.0	0.0
Saturated Queue (Qs), veh	0.0	0.0	0.0	0.0	0.0	0.0	0.0	0.0
Saturated Capacity (cs), veh/h	0.0	0.0	0.0	0.0	0.0	0.0	0.0	0.0
Initial Queue Clear Time (tc), h	0.3	0.0	0.0	0.3	0.0	0.0	0.0	0.0

Middle Lane Group Data								
Assigned Movement	0	2	8	4	0	6	0	0
Lane Assignment		T	T	T		T		
Lanes in Group	0	2	1	1	0	2	0	0
Group Volume (v), veh/h	0.0	1466.1	311.3	300.4	0.0	1137.1	0.0	0.0
Group Sat. Flow (s), veh/h/ln	0.0	1695.1	1862.7	1862.7	0.0	1695.1	0.0	0.0
Queue Serve Time (g_s), s	0.0	70.0	28.1	24.2	0.0	49.1	0.0	0.0
Cycle Queue Clear Time (g_c), s	0.0	70.0	28.1	24.2	0.0	49.1	0.0	0.0
Lane Group Capacity (c), veh/h	0.0	1396.0	328.7	482.1	0.0	1449.8	0.0	0.0
Volume-to-Capacity Ratio (X)	0.000	1.050	0.947	0.623	0.000	0.784	0.000	0.000
Available Capacity (c_a), veh/h	0.0	1396.0	328.7	482.1	0.0	1449.8	0.0	0.0
Upstream Filter Factor (I)	0.000	1.000	1.000	1.000	0.000	1.000	0.000	0.000
Uniform Delay (d1), s/veh	0.0	50.0	69.2	55.7	0.0	41.9	0.0	0.0
Incremental Delay (d2), s/veh	0.0	38.4	35.8	2.5	0.0	2.9	0.0	0.0
Initial Queue Delay (d3), s/veh	0.0	0.0	0.0	0.0	0.0	0.0	0.0	0.0
Control Delay (d), s/veh	0.0	88.4	105.0	58.2	0.0	44.8	0.0	0.0
First-Term Queue (Q1), veh/ln	0.0	29.5	13.5	11.5	0.0	20.7	0.0	0.0
Second-Term Queue (Q2), veh/ln	0.0	7.5	3.3	0.3	0.0	0.6	0.0	0.0
Third-Term Queue (Q3), veh/ln	0.0	0.0	0.0	0.0	0.0	0.0	0.0	0.0
Percentile bk-of-que factor (f_B%)	0.000	1.000	1.000	1.000	0.000	1.000	0.000	0.000
Percentile Back of Queue (Q%), veh/ln	0.0	37.0	16.7	11.8	0.0	21.2	0.0	0.0
Percentile Storage Ratio (RQ%)	0.00	2.06	0.23	0.87	0.00	0.74	0.00	0.00

Initial Queue (Qb), veh	0.0	0.0	0.0	0.0	0.0	0.0	0.0	0.0
Final (Residual) Queue (Qe), veh	0.0	17.5	0.0	0.0	0.0	0.0	0.0	0.0
Saturated Delay (ds), s/veh	0.0	0.0	0.0	0.0	0.0	0.0	0.0	0.0
Saturated Queue (Qs), veh	0.0	0.0	0.0	0.0	0.0	0.0	0.0	0.0
Saturated Capacity (cs), veh/h	0.0	0.0	0.0	0.0	0.0	0.0	0.0	0.0
Initial Queue Clear Time (tc), h	0.0	0.3	0.0	0.0	0.0	0.0	0.0	0.0

Right Lane Group Data								
Assigned Movement	0	12	18	14	0	16	0	0
Lane Assignment		T+R	T+R	T+R		T+R		
Lanes in Group	0	1	1	1	0	1	0	0
Group Volume (v), veh/h	0.0	799.4	310.2	299.6	0.0	595.0	0.0	0.0
Group Sat. Flow (s), veh/h/ln	0.0	1842.4	1855.2	1857.5	0.0	1770.8	0.0	0.0
Queue Serve Time (g_s), s	0.0	70.0	28.1	24.2	0.0	49.2	0.0	0.0
Cycle Queue Clear Time (g_c), s	0.0	70.0	28.1	24.2	0.0	49.2	0.0	0.0
Prot RT Sat Flow Rate (s_R), veh/h/ln	0.0	0.0	0.0	0.0	0.0	0.0	0.0	0.0
Prot RT Eff. Green (g_R), s	0.0	0.0	0.0	0.0	0.0	0.0	0.0	0.0
Proportion RT Outside Lane (P_R)	0.000	0.063	0.023	0.016	0.000	0.294	0.000	0.000
Lane Group Capacity (c), veh/h	0.0	758.6	327.4	480.8	0.0	757.3	0.0	0.0
Volume-to-Capacity Ratio (X)	0.000	1.054	0.947	0.623	0.000	0.786	0.000	0.000
Available Capacity (c_a), veh/h	0.0	758.6	327.4	480.8	0.0	757.3	0.0	0.0
Upstream Filter Factor (I)	0.000	1.000	1.000	1.000	0.000	1.000	0.000	0.000
Uniform Delay (d1), s/veh	0.0	50.0	69.2	55.7	0.0	41.9	0.0	0.0
Incremental Delay (d2), s/veh	0.0	47.7	36.0	2.5	0.0	5.5	0.0	0.0
Initial Queue Delay (d3), s/veh	0.0	0.0	0.0	0.0	0.0	0.0	0.0	0.0
Control Delay (d), s/veh	0.0	97.7	105.2	58.2	0.0	47.4	0.0	0.0
First-Term Queue (Q1), veh/ln	0.0	32.1	13.4	11.5	0.0	21.6	0.0	0.0
Second-Term Queue (Q2), veh/ln	0.0	10.1	3.3	0.3	0.0	1.2	0.0	0.0
Third-Term Queue (Q3), veh/ln	0.0	0.0	0.0	0.0	0.0	0.0	0.0	0.0
Percentile bk-of-que factor (f_B%)	0.000	1.000	1.000	1.000	0.000	1.000	0.000	0.000
Percentile Back of Queue (Q%), veh/ln	0.0	42.2	16.7	11.8	0.0	22.8	0.0	0.0
Percentile Storage Ratio (RQ%)	0.00	2.34	0.23	0.87	0.00	0.79	0.00	0.00
Initial Queue (Qb), veh	0.0	0.0	0.0	0.0	0.0	0.0	0.0	0.0
Final (Residual) Queue (Qe), veh	0.0	10.2	0.0	0.0	0.0	0.0	0.0	0.0
Saturated Delay (ds), s/veh	0.0	0.0	0.0	0.0	0.0	0.0	0.0	0.0
Saturated Queue (Qs), veh	0.0	0.0	0.0	0.0	0.0	0.0	0.0	0.0
Saturated Capacity (cs), veh/h	0.0	0.0	0.0	0.0	0.0	0.0	0.0	0.0
Initial Queue Clear Time (tc), h	0.0	0.3	0.0	0.0	0.0	0.0	0.0	0.0

Intersection Summary	
HCM Average Control Delay	78.1
HCM Level of Service	E

Movement	EBL	EBT	EBR	WBL	WBT	WBR	NEL	NET	NER	SWL	SWT	SWR
Lane Configurations												
Volume (veh/h)	14	4	0	0	5	10	34	2512	20	0	0	0
Sign Control		Stop			Stop			Free			Free	
Grade		0%			0%			0%			0%	
Peak Hour Factor	0.96	0.96	0.96	0.96	0.96	0.96	0.96	0.96	0.96	0.96	0.96	0.96
Hourly flow rate (vph)	15	4	0	0	5	10	35	2617	21	0	0	0
Pedestrians												
Lane Width (ft)												
Walking Speed (ft/s)												
Percent Blockage												
Right turn flare (veh)												
Median type								None			None	
Median storage veh)												
Upstream signal (ft)												
pX, platoon unblocked												
vC, conflicting volume	956	2708	0	2700	2698	883	0			2638		
vC1, stage 1 conf vol												
vC2, stage 2 conf vol												
vCu, unblocked vol	956	2708	0	2700	2698	883	0			2638		
tC, single (s)	7.5	6.5	6.9	7.5	6.5	6.9	4.1			4.1		
tC, 2 stage (s)												
tF (s)	3.5	4.0	3.3	3.5	4.0	3.3	2.2			2.2		
p0 queue free %	91	79	100	100	75	96	98			100		
cM capacity (veh/h)	162	20	1084	8	21	289	1622			158		

Direction, Lane #	EB 1	WB 1	NE 1	NE 2	NE 3
Volume Total	19	16	690	1308	675
Volume Left	15	0	35	0	0
Volume Right	0	10	0	0	21
cSH	64	54	1622	1700	1700
Volume to Capacity	0.29	0.29	0.02	0.77	0.40
Queue Length 95th (ft)	26	25	2	0	0
Control Delay (s)	83.7	96.4	0.6	0.0	0.0
Lane LOS	F	F	A		
Approach Delay (s)	83.7	96.4	0.2		
Approach LOS	F	F			

Intersection Summary				
Average Delay		1.3		
Intersection Capacity Utilization		64.0%	ICU Level of Service	B
Analysis Period (min)		15		

Movement	EBL	EBT	EBR	WBL	WBT	WBR	NEL	NET	NER	SWL	SWT	SWR
Lane Configurations												
Volume (veh/h)	2	11	0	0	46	12	5	2515	41	0	0	0
Sign Control		Stop			Stop			Free			Free	
Grade		0%			0%			0%			0%	
Peak Hour Factor	0.93	0.93	0.93	0.93	0.93	0.93	0.93	0.93	0.93	0.93	0.93	0.93
Hourly flow rate (vph)	2	12	0	0	49	13	5	2704	44	0	0	0
Pedestrians												
Lane Width (ft)												
Walking Speed (ft/s)												
Percent Blockage												
Right turn flare (veh)												
Median type								None			None	
Median storage veh)												
Upstream signal (ft)												
pX, platoon unblocked												
vC, conflicting volume	950	2759	0	2743	2737	923	0			2748		
vC1, stage 1 conf vol												
vC2, stage 2 conf vol												
vCu, unblocked vol	950	2759	0	2743	2737	923	0			2748		
tC, single (s)	7.5	6.5	6.9	7.5	6.5	6.9	4.1			4.1		
tC, 2 stage (s)												
tF (s)	3.5	4.0	3.3	3.5	4.0	3.3	2.2			2.2		
p0 queue free %	0	38	100	100	0	95	100			100		
cM capacity (veh/h)	0	19	1084	5	20	272	1622			143		

Direction, Lane #	EB 1	WB 1	NE 1	NE 2	NE 3
Volume Total	14	62	681	1352	720
Volume Left	2	0	5	0	0
Volume Right	0	13	0	0	44
cSH	0	25	1622	1700	1700
Volume to Capacity	Err	2.54	0.00	0.80	0.42
Queue Length 95th (ft)	Err	194	0	0	0
Control Delay (s)	Err	1035.5	0.1	0.0	0.0
Lane LOS	F	F	A		
Approach Delay (s)	Err	1035.5	0.0		
Approach LOS	F	F			

Intersection Summary			
Average Delay	Err		
Intersection Capacity Utilization	59.6%	ICU Level of Service	B
Analysis Period (min)	15		

Movement	EBL	EBR	NBL	NBT	SBT	SBR
Lane Configurations						
Volume (veh/h)	2	0	2	300	83	2
Sign Control	Stop			Free	Free	
Grade	0%			0%	0%	
Peak Hour Factor	0.92	0.92	0.92	0.92	0.92	0.92
Hourly flow rate (vph)	2	0	2	326	90	2
Pedestrians						
Lane Width (ft)						
Walking Speed (ft/s)						
Percent Blockage						
Right turn flare (veh)						
Median type				None	None	
Median storage veh)						
Upstream signal (ft)						
pX, platoon unblocked						
vC, conflicting volume	422	91	92			
vC1, stage 1 conf vol						
vC2, stage 2 conf vol						
vCu, unblocked vol	422	91	92			
tC, single (s)	6.4	6.2	4.1			
tC, 2 stage (s)						
tF (s)	3.5	3.3	2.2			
p0 queue free %	100	100	100			
cM capacity (veh/h)	588	966	1502			

Direction, Lane #	EB 1	NB 1	SB 1
Volume Total	2	328	92
Volume Left	2	2	0
Volume Right	0	0	2
cSH	588	1502	1700
Volume to Capacity	0.00	0.00	0.05
Queue Length 95th (ft)	0	0	0
Control Delay (s)	11.1	0.1	0.0
Lane LOS	B	A	
Approach Delay (s)	11.1	0.1	0.0
Approach LOS	B		

Intersection Summary			
Average Delay	0.1		
Intersection Capacity Utilization	27.4%	ICU Level of Service	A
Analysis Period (min)	15		

Movement	EBL	EBR	NBL	NBT	SBT	SBR
Lane Configurations						
Volume (veh/h)	7	1	1	308	85	1
Sign Control	Stop			Free	Free	
Grade	0%			0%	0%	
Peak Hour Factor	0.92	0.92	0.92	0.92	0.92	0.92
Hourly flow rate (vph)	8	1	1	335	92	1
Pedestrians						
Lane Width (ft)						
Walking Speed (ft/s)						
Percent Blockage						
Right turn flare (veh)						
Median type				None	None	
Median storage veh)						
Upstream signal (ft)						
pX, platoon unblocked						
vC, conflicting volume	430	93	93			
vC1, stage 1 conf vol						
vC2, stage 2 conf vol						
vCu, unblocked vol	430	93	93			
tC, single (s)	6.4	6.2	4.1			
tC, 2 stage (s)						
tF (s)	3.5	3.3	2.2			
p0 queue free %	99	100	100			
cM capacity (veh/h)	582	964	1501			

Direction, Lane #	EB 1	NB 1	SB 1
Volume Total	9	336	93
Volume Left	8	1	0
Volume Right	1	0	1
cSH	612	1501	1700
Volume to Capacity	0.01	0.00	0.05
Queue Length 95th (ft)	1	0	0
Control Delay (s)	11.0	0.0	0.0
Lane LOS	B	A	
Approach Delay (s)	11.0	0.0	0.0
Approach LOS	B		

Intersection Summary			
Average Delay	0.2		
Intersection Capacity Utilization	27.0%	ICU Level of Service	A
Analysis Period (min)	15		

Movement	EBL	EBR	NBL	NBT	SBT	SBR
Lane Configurations						
Volume (veh/h)	19	11	9	300	75	4
Sign Control	Stop			Free	Free	
Grade	0%			0%	0%	
Peak Hour Factor	0.92	0.92	0.92	0.92	0.92	0.92
Hourly flow rate (vph)	21	12	10	326	82	4
Pedestrians						
Lane Width (ft)						
Walking Speed (ft/s)						
Percent Blockage						
Right turn flare (veh)						
Median type				None	None	
Median storage veh)						
Upstream signal (ft)						
pX, platoon unblocked						
vC, conflicting volume	429	84	86			
vC1, stage 1 conf vol						
vC2, stage 2 conf vol						
vCu, unblocked vol	429	84	86			
tC, single (s)	6.4	6.2	4.1			
tC, 2 stage (s)						
tF (s)	3.5	3.3	2.2			
p0 queue free %	96	99	99			
cM capacity (veh/h)	579	976	1510			

Direction, Lane #	EB 1	NB 1	SB 1
Volume Total	33	336	86
Volume Left	21	10	0
Volume Right	12	0	4
cSH	680	1510	1700
Volume to Capacity	0.05	0.01	0.05
Queue Length 95th (ft)	4	0	0
Control Delay (s)	10.6	0.3	0.0
Lane LOS	B	A	
Approach Delay (s)	10.6	0.3	0.0
Approach LOS	B		

Intersection Summary			
Average Delay	1.0		
Intersection Capacity Utilization	33.0%	ICU Level of Service	A
Analysis Period (min)	15		

Movement	EBL	EBR	NBL	NBT	SBT	SBR
Lane Configurations						
Volume (veh/h)	25	21	21	274	48	15
Sign Control	Stop			Free	Free	
Grade	0%			0%	0%	
Peak Hour Factor	0.92	0.92	0.92	0.92	0.92	0.92
Hourly flow rate (vph)	27	23	23	298	52	16
Pedestrians						
Lane Width (ft)						
Walking Speed (ft/s)						
Percent Blockage						
Right turn flare (veh)						
Median type				None	None	
Median storage veh)						
Upstream signal (ft)						
pX, platoon unblocked						
vC, conflicting volume	404	60	68			
vC1, stage 1 conf vol						
vC2, stage 2 conf vol						
vCu, unblocked vol	404	60	68			
tC, single (s)	6.4	6.2	4.1			
tC, 2 stage (s)						
tF (s)	3.5	3.3	2.2			
p0 queue free %	95	98	99			
cM capacity (veh/h)	594	1005	1533			

Direction, Lane #	EB 1	NB 1	SB 1
Volume Total	50	321	68
Volume Left	27	23	0
Volume Right	23	0	16
cSH	730	1533	1700
Volume to Capacity	0.07	0.01	0.04
Queue Length 95th (ft)	5	1	0
Control Delay (s)	10.3	0.6	0.0
Lane LOS	B	A	
Approach Delay (s)	10.3	0.6	0.0
Approach LOS	B		

Intersection Summary			
Average Delay	1.6		
Intersection Capacity Utilization	32.2%	ICU Level of Service	A
Analysis Period (min)	15		

Movement	EBL	EBT	EBR	WBL	WBT	WBR	NBL	NBT	NBR	SBL	SBT	SBR
Lane Configurations												
Sign Control		Stop			Stop			Stop			Stop	
Volume (vph)	4	111	48	33	94	1	20	226	15	1	1	1
Peak Hour Factor	0.92	0.92	0.92	0.92	0.92	0.92	0.92	0.92	0.92	0.92	0.92	0.92
Hourly flow rate (vph)	4	121	52	36	102	1	22	246	16	1	1	1

Direction, Lane #	EB 1	WB 1	NB 1	SB 1
Volume Total (vph)	177	139	284	3
Volume Left (vph)	4	36	22	1
Volume Right (vph)	52	1	16	1
Hadj (s)	-0.14	0.08	0.01	-0.10
Departure Headway (s)	4.7	4.9	4.7	5.0
Degree Utilization, x	0.23	0.19	0.37	0.00
Capacity (veh/h)	718	681	730	650
Control Delay (s)	9.1	9.1	10.4	8.0
Approach Delay (s)	9.1	9.1	10.4	8.0
Approach LOS	A	A	B	A

Intersection Summary			
Delay	9.7		
HCM Level of Service	A		
Intersection Capacity Utilization	40.3%	ICU Level of Service	A
Analysis Period (min)	15		

HCM Unsignalized Intersection Capacity Analysis
1: SW 97th Ave. & SW 174th St.

2/18/2015

Movement	EBL	EBT	EBR	WBL	WBT	WBR	NBL	NBT	NBR	SBL	SBT	SBR
Lane Configurations												
Sign Control		Stop			Stop			Stop			Stop	
Volume (vph)	3	121	32	28	105	2	23	7	12	28	69	4
Peak Hour Factor	0.84	0.84	0.84	0.84	0.84	0.84	0.84	0.84	0.84	0.84	0.84	0.84
Hourly flow rate (vph)	4	144	38	33	125	2	27	8	14	33	82	5

Direction, Lane #	EB 1	WB 1	NB 1	SB 1
Volume Total (vph)	186	161	50	120
Volume Left (vph)	4	33	27	33
Volume Right (vph)	38	2	14	5
Hadj (s)	-0.09	0.07	-0.03	0.07
Departure Headway (s)	4.4	4.6	4.8	4.8
Degree Utilization, x	0.23	0.21	0.07	0.16
Capacity (veh/h)	776	739	681	687
Control Delay (s)	8.8	8.8	8.2	8.8
Approach Delay (s)	8.8	8.8	8.2	8.8
Approach LOS	A	A	A	A

Intersection Summary			
Delay	8.7		
HCM Level of Service	A		
Intersection Capacity Utilization	31.4%	ICU Level of Service	A
Analysis Period (min)	15		

Lane Group	EBL	NBT	SBT	NET
Lane Group Flow (vph)	131	283	84	2233
v/c Ratio	0.70	0.55	0.22	0.78
Control Delay	78.0	16.1	47.7	25.4
Queue Delay	0.0	0.0	0.0	0.0
Total Delay	78.0	16.1	47.7	25.4
Queue Length 50th (ft)	113	44	63	540
Queue Length 95th (ft)	184	139	115	641
Internal Link Dist (ft)	257	1041	665	1300
Turn Bay Length (ft)				
Base Capacity (vph)	238	512	375	2881
Starvation Cap Reductn	0	0	0	0
Spillback Cap Reductn	0	0	0	0
Storage Cap Reductn	0	0	0	0
Reduced v/c Ratio	0.55	0.55	0.22	0.78

Intersection Summary

Movement	EBL	EBR	NBL	NBT	NBR	SBT	SBR	NEL2	NEL	NET	NER
Lane Configurations											
Volume (vph)	2	123	4	11	254	66	14	4	5	2086	27
Ideal Flow (vphpl)	1900	1900	1900	1900	1900	1900	1900	1900	1900	1900	1900
Total Lost time (s)	5.0			5.0		5.0				5.0	
Lane Util. Factor	1.00			1.00		1.00				0.91	
Frt	0.87			0.87		0.98				1.00	
Flt Protected	1.00			1.00		1.00				1.00	
Satd. Flow (prot)	1614			1624		1818				5075	
Flt Permitted	1.00			1.00		1.00				1.00	
Satd. Flow (perm)	1614			1621		1818				5075	
Peak-hour factor, PHF	0.95	0.95	0.95	0.95	0.95	0.95	0.95	0.95	0.95	0.95	0.95
Adj. Flow (vph)	2	129	4	12	267	69	15	4	5	2196	28
RTOR Reduction (vph)	0	0	0	178	0	0	0	0	0	1	0
Lane Group Flow (vph)	131	0	0	105	0	84	0	0	0	2232	0
Turn Type	NA		Perm	NA		NA		Perm	Perm	NA	
Protected Phases	3			4		8				6	
Permitted Phases			4					6	6		
Actuated Green, G (s)	15.7			28.0		28.0				77.1	
Effective Green, g (s)	15.7			28.0		28.0				77.1	
Actuated g/C Ratio	0.12			0.21		0.21				0.57	
Clearance Time (s)	5.0			5.0		5.0				5.0	
Vehicle Extension (s)	3.0			3.0		3.0				3.0	
Lane Grp Cap (vph)	187			334		375				2881	
v/s Ratio Prot	c0.08					0.05					
v/s Ratio Perm				c0.06						0.44	
v/c Ratio	0.70			0.31		0.22				0.77	
Uniform Delay, d1	57.8			45.8		44.9				22.6	
Progression Factor	1.00			1.00		1.00				1.00	
Incremental Delay, d2	11.2			2.5		1.4				2.1	
Delay (s)	69.0			48.2		46.2				24.8	
Level of Service	E			D		D				C	
Approach Delay (s)	69.0			48.2		46.2				24.8	
Approach LOS	E			D		D				C	

Intersection Summary			
HCM Average Control Delay	30.0	HCM Level of Service	C
HCM Volume to Capacity ratio	0.66		
Actuated Cycle Length (s)	135.8	Sum of lost time (s)	15.0
Intersection Capacity Utilization	81.3%	ICU Level of Service	D
Analysis Period (min)	15		
c Critical Lane Group			

Movement	EBL	EBR	NBL	NBT	SBT	SBR
Lane Configurations						
Volume (veh/h)	47	38	30	222	89	70
Sign Control	Stop			Free	Free	
Grade	0%			0%	0%	
Peak Hour Factor	0.93	0.93	0.93	0.93	0.93	0.93
Hourly flow rate (vph)	51	41	32	239	96	75
Pedestrians						
Lane Width (ft)						
Walking Speed (ft/s)						
Percent Blockage						
Right turn flare (veh)						
Median type				None	None	
Median storage veh)						
Upstream signal (ft)					1121	
pX, platoon unblocked						
vC, conflicting volume	437	133	171			
vC1, stage 1 conf vol						
vC2, stage 2 conf vol						
vCu, unblocked vol	437	133	171			
tC, single (s)	6.4	6.2	4.1			
tC, 2 stage (s)						
tF (s)	3.5	3.3	2.2			
p0 queue free %	91	96	98			
cM capacity (veh/h)	564	916	1406			

Direction, Lane #	EB 1	NB 1	SB 1
Volume Total	91	271	171
Volume Left	51	32	0
Volume Right	41	0	75
cSH	681	1406	1700
Volume to Capacity	0.13	0.02	0.10
Queue Length 95th (ft)	12	2	0
Control Delay (s)	11.1	1.1	0.0
Lane LOS	B	A	
Approach Delay (s)	11.1	1.1	0.0
Approach LOS	B		

Intersection Summary			
Average Delay	2.5		
Intersection Capacity Utilization	37.2%	ICU Level of Service	A
Analysis Period (min)	15		

Movement	WBL	WBR	NBT	NBR	SBL	SBT
Lane Configurations						
Volume (veh/h)	133	48	193	24	21	82
Sign Control	Stop		Free			Free
Grade	0%		0%			0%
Peak Hour Factor	0.97	0.97	0.97	0.97	0.97	0.97
Hourly flow rate (vph)	137	49	199	25	22	85
Pedestrians						
Lane Width (ft)						
Walking Speed (ft/s)						
Percent Blockage						
Right turn flare (veh)						
Median type			None			None
Median storage veh)						
Upstream signal (ft)						
pX, platoon unblocked						
vC, conflicting volume	339	211			224	
vC1, stage 1 conf vol						
vC2, stage 2 conf vol						
vCu, unblocked vol	339	211			224	
tC, single (s)	6.4	6.2			4.1	
tC, 2 stage (s)						
tF (s)	3.5	3.3			2.2	
p0 queue free %	79	94			98	
cM capacity (veh/h)	646	829			1345	

Direction, Lane #	WB 1	NB 1	SB 1
Volume Total	187	224	106
Volume Left	137	0	22
Volume Right	49	25	0
cSH	686	1700	1345
Volume to Capacity	0.27	0.13	0.02
Queue Length 95th (ft)	28	0	1
Control Delay (s)	12.2	0.0	1.7
Lane LOS	B		A
Approach Delay (s)	12.2	0.0	1.7
Approach LOS	B		

Intersection Summary			
Average Delay	4.8		
Intersection Capacity Utilization	37.4%	ICU Level of Service	A
Analysis Period (min)	15		

Movement	EBL	EBR	NBL	NBT	SBT	SBR
Lane Configurations						
Volume (veh/h)	20	29	6	213	121	92
Sign Control	Stop			Free	Free	
Grade	0%			0%	0%	
Peak Hour Factor	0.94	0.94	0.94	0.94	0.94	0.94
Hourly flow rate (vph)	21	31	6	227	129	98
Pedestrians						
Lane Width (ft)						
Walking Speed (ft/s)						
Percent Blockage						
Right turn flare (veh)						
Median type				None	None	
Median storage veh)						
Upstream signal (ft)				1230		
pX, platoon unblocked						
vC, conflicting volume	417	178	227			
vC1, stage 1 conf vol						
vC2, stage 2 conf vol						
vCu, unblocked vol	417	178	227			
tC, single (s)	6.4	6.2	4.1			
tC, 2 stage (s)						
tF (s)	3.5	3.3	2.2			
p0 queue free %	96	96	100			
cM capacity (veh/h)	589	865	1342			

Direction, Lane #	EB 1	NB 1	SB 1
Volume Total	52	233	227
Volume Left	21	6	0
Volume Right	31	0	98
cSH	727	1342	1700
Volume to Capacity	0.07	0.00	0.13
Queue Length 95th (ft)	6	0	0
Control Delay (s)	10.3	0.3	0.0
Lane LOS	B	A	
Approach Delay (s)	10.3	0.3	0.0
Approach LOS	B		

Intersection Summary			
Average Delay	1.2		
Intersection Capacity Utilization	26.0%	ICU Level of Service	A
Analysis Period (min)	15		

Movement	EBL	EBT	EBR	WBL	WBT	WBR	NBL	NBT	NBR	SBL	SBT	SBR
Lane Configurations												
Volume (veh/h)	3	2	18	52	31	1	2	218	35	1	125	21
Sign Control		Stop			Stop			Free			Free	
Grade		0%			0%			0%			0%	
Peak Hour Factor	0.92	0.92	0.92	0.92	0.92	0.92	0.92	0.92	0.92	0.92	0.92	0.92
Hourly flow rate (vph)	3	2	20	57	34	1	2	237	38	1	136	23
Pedestrians												
Lane Width (ft)												
Walking Speed (ft/s)												
Percent Blockage												
Right turn flare (veh)												
Median type								None			None	
Median storage veh)												
Upstream signal (ft)								904				
pX, platoon unblocked												
vC, conflicting volume	428	429	147	430	421	256	159			275		
vC1, stage 1 conf vol												
vC2, stage 2 conf vol												
vCu, unblocked vol	428	429	147	430	421	256	159			275		
tC, single (s)	7.1	6.5	6.2	7.1	6.5	6.2	4.1			4.1		
tC, 2 stage (s)												
tF (s)	3.5	4.0	3.3	3.5	4.0	3.3	2.2			2.2		
p0 queue free %	99	100	98	89	94	100	100			100		
cM capacity (veh/h)	509	517	900	521	522	783	1421			1288		

Direction, Lane #	EB 1	WB 1	NB 1	SB 1
Volume Total	25	91	277	160
Volume Left	3	57	2	1
Volume Right	20	1	38	23
cSH	773	524	1421	1288
Volume to Capacity	0.03	0.17	0.00	0.00
Queue Length 95th (ft)	3	16	0	0
Control Delay (s)	9.8	13.3	0.1	0.1
Lane LOS	A	B	A	A
Approach Delay (s)	9.8	13.3	0.1	0.1
Approach LOS	A	B		

Intersection Summary			
Average Delay	2.7		
Intersection Capacity Utilization	32.9%	ICU Level of Service	A
Analysis Period (min)	15		

Movement	EBL	EBT	EBR	WBL	WBT	WBR	NBL	NBT	NBR	SBL	SBT	SBR
Lane Configurations												
Volume (veh/h)	1	3	2	0	1	1	2	251	1	0	197	2
Sign Control		Stop			Stop			Free			Free	
Grade		0%			0%			0%			0%	
Peak Hour Factor	0.95	0.95	0.95	0.95	0.95	0.95	0.95	0.95	0.95	0.95	0.95	0.95
Hourly flow rate (vph)	1	3	2	0	1	1	2	264	1	0	207	2
Pedestrians								1				
Lane Width (ft)								12.0				
Walking Speed (ft/s)								4.0				
Percent Blockage								0				
Right turn flare (veh)												
Median type								None			None	
Median storage veh)												
Upstream signal (ft)								601				
pX, platoon unblocked	0.98	0.98		0.98	0.98	0.98				0.98		
vC, conflicting volume	479	478	209	482	478	265	209			265		
vC1, stage 1 conf vol												
vC2, stage 2 conf vol												
vCu, unblocked vol	463	462	209	466	463	246	209			246		
tC, single (s)	7.1	6.5	6.2	7.1	6.5	6.2	4.1			4.1		
tC, 2 stage (s)												
tF (s)	3.5	4.0	3.3	3.5	4.0	3.3	2.2			2.2		
p0 queue free %	100	99	100	100	100	100	100			100		
cM capacity (veh/h)	499	488	830	494	488	781	1361			1300		

Direction, Lane #	EB 1	WB 1	NB 1	SB 1
Volume Total	6	2	267	209
Volume Left	1	0	2	0
Volume Right	2	1	1	2
cSH	568	601	1361	1300
Volume to Capacity	0.01	0.00	0.00	0.00
Queue Length 95th (ft)	1	0	0	0
Control Delay (s)	11.4	11.0	0.1	0.0
Lane LOS	B	B	A	
Approach Delay (s)	11.4	11.0	0.1	0.0
Approach LOS	B	B		

Intersection Summary			
Average Delay	0.2		
Intersection Capacity Utilization	24.9%	ICU Level of Service	A
Analysis Period (min)	15		

Movement	EBL	EBT	EBR	WBL	WBT	WBR	NBL	NBT	NBR	SBL	SBT	SBR
Lane Configurations												
Volume (veh/h)	7	0	22	1	1	1	5	246	2	0	176	22
Sign Control		Stop			Stop			Free			Free	
Grade		0%			0%			0%			0%	
Peak Hour Factor	0.97	0.97	0.97	0.97	0.97	0.97	0.97	0.97	0.97	0.97	0.97	0.97
Hourly flow rate (vph)	7	0	23	1	1	1	5	254	2	0	181	23
Pedestrians												
Lane Width (ft)												
Walking Speed (ft/s)												
Percent Blockage												
Right turn flare (veh)												
Median type								None			None	
Median storage veh)												
Upstream signal (ft)								300				
pX, platoon unblocked	0.91	0.91		0.91	0.91	0.91				0.91		
vC, conflicting volume	459	459	193	480	469	255	204			256		
vC1, stage 1 conf vol												
vC2, stage 2 conf vol												
vCu, unblocked vol	352	351	193	375	363	126	204			127		
tC, single (s)	7.1	6.5	6.2	7.1	6.5	6.2	4.1			4.1		
tC, 2 stage (s)												
tF (s)	3.5	4.0	3.3	3.5	4.0	3.3	2.2			2.2		
p0 queue free %	99	100	97	100	100	100	100			100		
cM capacity (veh/h)	544	518	849	512	510	838	1367			1322		

Direction, Lane #	EB 1	WB 1	NB 1	SB 1
Volume Total	30	3	261	204
Volume Left	7	1	5	0
Volume Right	23	1	2	23
cSH	747	587	1367	1322
Volume to Capacity	0.04	0.01	0.00	0.00
Queue Length 95th (ft)	3	0	0	0
Control Delay (s)	10.0	11.2	0.2	0.0
Lane LOS	B	B	A	
Approach Delay (s)	10.0	11.2	0.2	0.0
Approach LOS	B	B		

Intersection Summary			
Average Delay	0.8		
Intersection Capacity Utilization	27.1%	ICU Level of Service	A
Analysis Period (min)	15		

Lane Group	EBL	EBT	EBR	WBL	WBT	NBL	NBT	SBL	SBT
Lane Group Flow (vph)	144	463	62	186	457	134	324	19	200
v/c Ratio	0.24	0.74	0.14	0.38	0.36	0.31	0.42	0.06	0.38
Control Delay	10.8	32.7	7.9	12.3	22.6	26.2	19.0	24.2	34.7
Queue Delay	0.0	0.0	0.0	0.0	0.0	0.0	0.0	0.0	0.0
Total Delay	10.8	32.7	7.9	12.3	22.6	26.2	19.0	24.2	34.7
Queue Length 50th (ft)	33	184	0	44	98	56	42	7	49
Queue Length 95th (ft)	73	321	31	92	158	117	91	26	93
Internal Link Dist (ft)		1915			531		229		156
Turn Bay Length (ft)	130			95		155		130	
Base Capacity (vph)	617	893	663	515	1776	416	1014	319	798
Starvation Cap Reductn	0	0	0	0	0	0	0	0	0
Spillback Cap Reductn	0	0	0	0	0	0	0	0	0
Storage Cap Reductn	0	0	0	0	0	0	0	0	0
Reduced v/c Ratio	0.23	0.52	0.09	0.36	0.26	0.32	0.32	0.06	0.25

Intersection Summary

Movement	EBL	EBT	EBR	WBL	WBT	WBR	NBL	NBT	NBR	SBL	SBT	SBR
Lane Configurations												
Volume (vph)	131	421	56	169	398	18	122	155	140	17	146	36
Ideal Flow (vphpl)	1900	1900	1900	1900	1900	1900	1900	1900	1900	1900	1900	1900
Total Lost time (s)	3.0	3.0	5.0	3.0	3.0		3.0	3.0		3.0	3.0	
Lane Util. Factor	1.00	1.00	1.00	1.00	0.95		1.00	0.95		1.00	0.95	
Frt	1.00	1.00	0.85	1.00	0.99		1.00	0.93		1.00	0.97	
Flt Protected	0.95	1.00	1.00	0.95	1.00		0.95	1.00		0.95	1.00	
Satd. Flow (prot)	1770	1863	1583	1770	3516		1770	3287		1770	3433	
Flt Permitted	0.49	1.00	1.00	0.44	1.00		0.63	1.00		0.56	1.00	
Satd. Flow (perm)	910	1863	1583	818	3516		1166	3287		1035	3433	
Peak-hour factor, PHF	0.91	0.91	0.91	0.91	0.91	0.91	0.91	0.91	0.91	0.91	0.91	0.91
Adj. Flow (vph)	144	463	62	186	437	20	134	170	154	19	160	40
RTOR Reduction (vph)	0	0	47	0	3	0	0	131	0	0	20	0
Lane Group Flow (vph)	144	463	15	186	454	0	134	193	0	19	180	0
Turn Type	custom	NA	custom	custom	NA		custom	NA		custom	NA	
Protected Phases	1 2	2 4		1 3	3 4		5 6	6 8		5 7	7 8	
Permitted Phases	4		4	4			8			8		
Actuated Green, G (s)	41.4	29.2	23.4	37.7	31.5		24.3	14.2		17.9	13.8	
Effective Green, g (s)	41.4	29.2	23.4	37.7	31.5		24.3	14.2		17.9	13.8	
Actuated g/C Ratio	0.44	0.31	0.25	0.40	0.33		0.26	0.15		0.19	0.15	
Clearance Time (s)			5.0									
Vehicle Extension (s)			3.0									
Lane Grp Cap (vph)	562	576	392	470	1172		397	494		264	501	
v/s Ratio Prot	0.05	c0.25		c0.06	c0.13		c0.05	0.06		0.01	c0.05	
v/s Ratio Perm	0.06		0.01	0.10			0.03			0.01		
v/c Ratio	0.26	0.80	0.04	0.40	0.39		0.34	0.39		0.07	0.36	
Uniform Delay, d1	16.2	30.0	27.0	19.1	24.1		28.2	36.2		31.4	36.4	
Progression Factor	1.00	1.00	1.00	1.00	1.00		1.00	1.00		1.00	1.00	
Incremental Delay, d2	0.2	8.0	0.0	0.6	0.2		0.5	0.5		0.1	0.4	
Delay (s)	16.5	38.0	27.1	19.7	24.3		28.7	36.8		31.5	36.8	
Level of Service	B	D	C	B	C		C	D		C	D	
Approach Delay (s)		32.4			23.0			34.4			36.3	
Approach LOS		C			C			C			D	

Intersection Summary			
HCM Average Control Delay	30.2	HCM Level of Service	C
HCM Volume to Capacity ratio	0.51		
Actuated Cycle Length (s)	94.5	Sum of lost time (s)	18.0
Intersection Capacity Utilization	57.8%	ICU Level of Service	B
Analysis Period (min)	15		
c Critical Lane Group			

Movement	EBL	EBT	WBT	WBR	SBL	SBR
Lane Configurations						
Volume (veh/h)	211	433	508	18	34	90
Sign Control		Free	Free		Stop	
Grade		0%	0%		0%	
Peak Hour Factor	0.94	0.94	0.94	0.94	0.94	0.94
Hourly flow rate (vph)	224	461	540	19	36	96
Pedestrians						
Lane Width (ft)						
Walking Speed (ft/s)						
Percent Blockage						
Right turn flare (veh)						
Median type		None	None			
Median storage veh)						
Upstream signal (ft)		611				
pX, platoon unblocked					0.85	
vC, conflicting volume	560				1460	550
vC1, stage 1 conf vol						
vC2, stage 2 conf vol						
vCu, unblocked vol	560				1452	550
tC, single (s)	4.1				6.4	6.2
tC, 2 stage (s)						
tF (s)	2.2				3.5	3.3
p0 queue free %	78				62	82
cM capacity (veh/h)	1011				95	535

Direction, Lane #	EB 1	EB 2	WB 1	SB 1
Volume Total	224	461	560	132
Volume Left	224	0	0	36
Volume Right	0	0	19	96
cSH	1011	1700	1700	235
Volume to Capacity	0.22	0.27	0.33	0.56
Queue Length 95th (ft)	21	0	0	77
Control Delay (s)	9.6	0.0	0.0	38.3
Lane LOS	A			E
Approach Delay (s)	3.1		0.0	38.3
Approach LOS				E

Intersection Summary			
Average Delay	5.2		
Intersection Capacity Utilization	56.9%	ICU Level of Service	B
Analysis Period (min)	15		

Lane Group	EBL	EBT	WBL	WBT	NBL	NBT	SBL	SBT
Lane Group Flow (vph)	302	507	274	570	130	1813	199	2233
v/c Ratio	0.96	0.81	0.95	0.95	0.90	0.87	0.86	0.96
Control Delay	97.6	63.5	98.5	82.9	82.1	42.9	65.7	47.0
Queue Delay	0.0	0.0	0.0	0.0	0.0	0.0	0.0	0.0
Total Delay	97.6	63.5	98.5	82.9	82.1	42.9	65.7	47.0
Queue Length 50th (ft)	276	225	274	284	67	550	126	700
Queue Length 95th (ft)	#461	293	#471	#407	#197	619	#256	#825
Internal Link Dist (ft)		364		1915		469		768
Turn Bay Length (ft)			286		160		130	
Base Capacity (vph)	316	630	288	599	144	2084	244	2330
Starvation Cap Reductn	0	0	0	0	0	0	0	0
Spillback Cap Reductn	0	0	0	0	0	0	0	0
Storage Cap Reductn	0	0	0	0	0	0	0	0
Reduced v/c Ratio	0.96	0.80	0.95	0.95	0.90	0.87	0.82	0.96

Intersection Summary

95th percentile volume exceeds capacity, queue may be longer.
Queue shown is maximum after two cycles.

Movement	EBL	EBT	EBR	WBL	WBT	WBR	NBL	NBT	NBR	SBL	SBT	SBR
Lane Configurations												
Volume (vph)	284	371	105	348	429	17	122	1507	197	187	1819	280
Ideal Flow (vphpl)	1900	1900	1900	1900	1900	1900	1900	1900	1900	1900	1900	1900
Total Lost time (s)	5.0	5.0		5.0	5.0		3.0	5.0		3.0	5.0	
Lane Util. Factor	1.00	0.95		0.91	0.91		1.00	0.91		1.00	0.91	
Frt	1.00	0.97		1.00	1.00		1.00	0.98		1.00	0.98	
Flt Protected	0.95	1.00		0.95	0.99		0.95	1.00		0.95	1.00	
Satd. Flow (prot)	1770	3422		1610	3346		1770	4997		1770	4983	
Flt Permitted	0.95	1.00		0.95	0.99		0.07	1.00		0.07	1.00	
Satd. Flow (perm)	1770	3422		1610	3346		128	4997		122	4983	
Peak-hour factor, PHF	0.94	0.94	0.94	0.94	0.94	0.94	0.94	0.94	0.94	0.94	0.94	0.94
Adj. Flow (vph)	302	395	112	370	456	18	130	1603	210	199	1935	298
RTOR Reduction (vph)	0	19	0	0	2	0	0	12	0	0	15	0
Lane Group Flow (vph)	302	488	0	274	568	0	130	1801	0	199	2218	0
Turn Type	Split	NA		Split	NA		pm+pt	NA		pm+pt	NA	
Protected Phases	4	4		8	8		5	2		1	6	
Permitted Phases							2			6		
Actuated Green, G (s)	24.9	24.9		25.0	25.0		65.0	58.0		75.0	65.0	
Effective Green, g (s)	24.9	24.9		25.0	25.0		65.0	58.0		75.0	65.0	
Actuated g/C Ratio	0.18	0.18		0.18	0.18		0.46	0.41		0.54	0.46	
Clearance Time (s)	5.0	5.0		5.0	5.0		3.0	5.0		3.0	5.0	
Vehicle Extension (s)	3.0	3.0		3.0	3.0		3.0	3.0		3.0	3.0	
Lane Grp Cap (vph)	315	609		288	598		142	2072		230	2315	
v/s Ratio Prot	c0.17	0.14		c0.17	0.17		0.05	0.36		c0.09	c0.45	
v/s Ratio Perm							0.38			0.38		
v/c Ratio	0.96	0.80		0.95	0.95		0.92	0.87		0.87	0.96	
Uniform Delay, d1	57.0	55.1		56.8	56.8		32.5	37.5		40.8	36.1	
Progression Factor	1.00	1.00		1.00	1.00		1.00	1.00		1.00	1.00	
Incremental Delay, d2	39.2	7.5		39.9	25.0		50.5	5.3		27.0	10.5	
Delay (s)	96.2	62.6		96.7	81.9		83.0	42.8		67.8	46.6	
Level of Service	F	E		F	F		F	D		E	D	
Approach Delay (s)		75.2			86.7			45.5			48.4	
Approach LOS		E			F			D			D	

Intersection Summary			
HCM Average Control Delay	56.4	HCM Level of Service	E
HCM Volume to Capacity ratio	0.93		
Actuated Cycle Length (s)	139.9	Sum of lost time (s)	13.0
Intersection Capacity Utilization	94.7%	ICU Level of Service	F
Analysis Period (min)	15		
c Critical Lane Group			

Movement	EBL	EBT	EBR	WBL	WBT	WBR	NBL	NBT	NBR	SBL	SBT	SBR
Lane Configurations												
Volume (vph)	284	371	105	348	429	17	122	1507	197	187	1819	280
Movement Number	7	4	14	3	8	18	5	2	12	1	6	16
Initial Queue, veh	0	0	0	0	0	0	0	0	0	0	0	0
Ped-Bike Adj. Factor (A_pbT)	1.00		1.00	1.00		1.00	1.00		1.00	1.00		1.00
Parking, Bus Adj. Factors	1.00	1.00	1.00	1.00	1.00	1.00	1.00	1.00	1.00	1.00	1.00	1.00
Adj. Sat. Flow Rate, veh/h/ln	1863	1863	1863	1863	1863	1863	1863	1863	1863	1863	1863	1863
Lanes	1	2	0	1	2	0	1	3	0	1	3	0
Lane Assignment												
Capacity, veh/h	321	507	142	321	644	25	147	1948	254	224	2038	309
Proportion Arriving On Green	0.18	0.18	0.18	0.18	0.18	0.18	0.05	0.43	0.43	0.08	0.46	0.46
Movement Delay, s/veh	91.0	64.6	66.6	155.2	59.8	60.1	74.6	40.3	45.0	58.3	47.7	58.8
Movement LOS	F	E	E	F	E	E	E	D	D	E	D	E
Approach Volume, veh/h		809			845			1943			2432	
Approach Delay, s/veh		75.1			101.7			44.1			52.1	
Approach LOS		E			F			D			D	

Timer:	1	2	3	4	5	6	7	8
Assigned Phase	1	2	8	4	5	6		
Case No	1.1	4.0	10.0	10.0	1.1	4.0		
Phase Duration (G+Y+Rc), s	14.09	64.10	30.00	30.00	10.00	68.19		
Change Period (Y+Rc), s	3.00	5.00	5.00	5.00	3.00	5.00		
Max. Allowable Headway (MAH), s	4.00	3.95	3.95	3.99	4.00	3.95		
Maximum Green Setting (Gmax), s	15.00	57.00	25.00	25.00	7.00	65.00		
Max. Queue Clearance Time (g_c+I1), s	10.87	45.13	27.00	25.23	7.69	60.98		
Green Extension Time (g_e), s	0.22	10.85	0.00	0.00	0.00	2.21		
Probability of Phase Call (p_c)	1.000	1.000	1.000	1.000	0.993	1.000		
Probability of Max Out (p_x)	0.909	0.933	1.000	1.000	1.000	0.999		

Left-Turn Movement Data					
Assigned Movement	1		3	7	5
Mvmt. Sat Flow, veh/h	1774.04		1774.04	1774.04	1774.04

Through Movement Data					
Assigned Movement		2	8	4	6
Mvmt. Sat Flow, veh/h		4554.25	3559.83	2802.84	4456.88

Right-Turn Movement Data					
Assigned Movement		12	18	14	16
Mvmt. Sat Flow, veh/h		593.89	140.81	784.25	676.65

Left Lane Group Data								
Assigned Movement	1	0	3	7	5	0	0	0
Lane Assignment	L (Pr/Pm)		L	LL (Pr/Pm)				
Lanes in Group	1	0	1	1	1	0	0	0
Group Volume (v), veh/h	198.9	0.0	370.2	302.1	129.8	0.0	0.0	0.0
Group Sat. Flow (s), veh/h/ln	1774.0	0.0	1774.0	1774.0	1774.0	0.0	0.0	0.0
Queue Serve Time (g_s), s	8.9	0.0	25.0	23.2	5.7	0.0	0.0	0.0
Cycle Queue Clear Time (g_c), s	8.9	0.0	25.0	23.2	5.7	0.0	0.0	0.0

Perm LT Sat Flow Rate (s_l), veh/h/ln	257.5	0.0	1774.0	1774.0	170.5	0.0	0.0	0.0
Shared LT Sat Flow (s_sh), veh/h/ln	0.0	0.0	0.0	0.0	0.0	0.0	0.0	0.0
Perm LT Eff. Green (g_p), s	65.2	0.0	0.0	0.0	59.1	0.0	0.0	0.0
Perm LT Serve Time (g_u), s	16.0	0.0	0.0	0.0	4.2	0.0	0.0	0.0
Perm LT Que Serve Time (g_ps), s	16.0	0.0	0.0	0.0	4.2	0.0	0.0	0.0
Time to First Blk (g_f), s	0.0	0.0	0.0	0.0	0.0	0.0	0.0	0.0
Serve Time pre Blk (g_fs), s	0.0	0.0	0.0	0.0	0.0	0.0	0.0	0.0
Proportion LT Inside Lane (P_L)	1.000	0.000	1.000	1.000	1.000	0.000	0.000	0.000
Lane Group Capacity (c), veh/h	224.2	0.0	320.9	320.9	147.2	0.0	0.0	0.0
Volume-to-Capacity Ratio (X)	0.887	0.000	1.154	0.941	0.882	0.000	0.000	0.000
Available Capacity (c_a), veh/h	274.4	0.0	320.9	320.9	147.2	0.0	0.0	0.0
Upstream Filter Factor (I)	1.000	0.000	1.000	1.000	1.000	0.000	0.000	0.000
Uniform Delay (d1), s/veh	34.0	0.0	56.6	55.9	32.8	0.0	0.0	0.0
Incremental Delay (d2), s/veh	24.3	0.0	98.6	35.1	41.7	0.0	0.0	0.0
Initial Queue Delay (d3), s/veh	0.0	0.0	0.0	0.0	0.0	0.0	0.0	0.0
Control Delay (d), s/veh	58.3	0.0	155.2	91.0	74.6	0.0	0.0	0.0
First-Term Queue (Q1), veh/ln	3.7	0.0	11.2	10.4	2.4	0.0	0.0	0.0
Second-Term Queue (Q2), veh/ln	1.5	0.0	8.8	3.1	1.7	0.0	0.0	0.0
Third-Term Queue (Q3), veh/ln	0.0	0.0	0.0	0.0	0.0	0.0	0.0	0.0
Percentile bk-of-que factor (f_B%)	1.000	0.000	1.000	1.000	1.000	0.000	0.000	0.000
Percentile Back of Queue (Q%), veh/ln	5.2	0.0	20.0	13.5	4.1	0.0	0.0	0.0
Percentile Storage Ratio (RQ%)	1.02	0.00	1.77	1.00	0.65	0.00	0.00	0.00
Initial Queue (Qb), veh	0.0	0.0	0.0	0.0	0.0	0.0	0.0	0.0
Final (Residual) Queue (Qe), veh	0.0	0.0	12.3	0.0	0.0	0.0	0.0	0.0
Saturated Delay (ds), s/veh	0.0	0.0	0.0	0.0	0.0	0.0	0.0	0.0
Saturated Queue (Qs), veh	0.0	0.0	0.0	0.0	0.0	0.0	0.0	0.0
Saturated Capacity (cs), veh/h	0.0	0.0	0.0	0.0	0.0	0.0	0.0	0.0
Initial Queue Clear Time (tc), h	0.0	0.0	0.3	0.0	0.0	0.0	0.0	0.0
Middle Lane Group Data								
Assigned Movement	0	2	8	4	0	6	0	0
Lane Assignment		T	T	T		T		
Lanes in Group	0	2	1	1	0	2	0	0
Group Volume (v), veh/h	0.0	1192.4	238.4	260.8	0.0	1465.5	0.0	0.0
Group Sat. Flow (s), veh/h/ln	0.0	1695.1	1862.7	1862.7	0.0	1695.1	0.0	0.0
Queue Serve Time (g_s), s	0.0	42.9	16.6	18.4	0.0	57.1	0.0	0.0
Cycle Queue Clear Time (g_c), s	0.0	42.9	16.6	18.4	0.0	57.1	0.0	0.0
Lane Group Capacity (c), veh/h	0.0	1449.9	337.0	337.0	0.0	1550.2	0.0	0.0
Volume-to-Capacity Ratio (X)	0.000	0.822	0.707	0.774	0.000	0.945	0.000	0.000
Available Capacity (c_a), veh/h	0.0	1449.9	337.0	337.0	0.0	1594.6	0.0	0.0
Upstream Filter Factor (I)	0.000	1.000	1.000	1.000	0.000	1.000	0.000	0.000
Uniform Delay (d1), s/veh	0.0	34.9	53.2	53.9	0.0	35.9	0.0	0.0
Incremental Delay (d2), s/veh	0.0	5.4	6.7	10.7	0.0	11.8	0.0	0.0
Initial Queue Delay (d3), s/veh	0.0	0.0	0.0	0.0	0.0	0.0	0.0	0.0
Control Delay (d), s/veh	0.0	40.3	59.8	64.6	0.0	47.7	0.0	0.0
First-Term Queue (Q1), veh/ln	0.0	17.6	7.8	8.7	0.0	23.2	0.0	0.0
Second-Term Queue (Q2), veh/ln	0.0	1.1	0.6	1.0	0.0	2.5	0.0	0.0
Third-Term Queue (Q3), veh/ln	0.0	0.0	0.0	0.0	0.0	0.0	0.0	0.0
Percentile bk-of-que factor (f_B%)	0.000	1.000	1.000	1.000	0.000	1.000	0.000	0.000
Percentile Back of Queue (Q%), veh/ln	0.0	18.6	8.4	9.7	0.0	25.7	0.0	0.0
Percentile Storage Ratio (RQ%)	0.00	1.04	0.12	0.71	0.00	0.89	0.00	0.00

Initial Queue (Qb), veh	0.0	0.0	0.0	0.0	0.0	0.0	0.0	0.0
Final (Residual) Queue (Qe), veh	0.0	0.0	0.0	0.0	0.0	0.0	0.0	0.0
Saturated Delay (ds), s/veh	0.0	0.0	0.0	0.0	0.0	0.0	0.0	0.0
Saturated Queue (Qs), veh	0.0	0.0	0.0	0.0	0.0	0.0	0.0	0.0
Saturated Capacity (cs), veh/h	0.0	0.0	0.0	0.0	0.0	0.0	0.0	0.0
Initial Queue Clear Time (tc), h	0.0	0.0	0.0	0.0	0.0	0.0	0.0	0.0

Right Lane Group Data								
Assigned Movement	0	12	18	14	0	16	0	0
Lane Assignment		T+R	T+R	T+R		T+R		
Lanes in Group	0	1	1	1	0	1	0	0
Group Volume (v), veh/h	0.0	620.4	236.1	245.6	0.0	767.4	0.0	0.0
Group Sat. Flow (s), veh/h/ln	0.0	1757.9	1837.9	1724.3	0.0	1743.3	0.0	0.0
Queue Serve Time (g_s), s	0.0	43.1	16.7	18.8	0.0	59.0	0.0	0.0
Cycle Queue Clear Time (g_c), s	0.0	43.1	16.7	18.8	0.0	59.0	0.0	0.0
Prot RT Sat Flow Rate (s_R), veh/h/ln	0.0	0.0	0.0	0.0	0.0	0.0	0.0	0.0
Prot RT Eff. Green (g_R), s	0.0	0.0	0.0	0.0	0.0	0.0	0.0	0.0
Proportion RT Outside Lane (P_R)	0.000	0.338	0.077	0.455	0.000	0.388	0.000	0.000
Lane Group Capacity (c), veh/h	0.0	751.9	332.5	312.0	0.0	797.2	0.0	0.0
Volume-to-Capacity Ratio (X)	0.000	0.825	0.710	0.787	0.000	0.963	0.000	0.000
Available Capacity (c_a), veh/h	0.0	751.9	332.5	312.0	0.0	820.0	0.0	0.0
Upstream Filter Factor (I)	0.000	1.000	1.000	1.000	0.000	1.000	0.000	0.000
Uniform Delay (d1), s/veh	0.0	35.0	53.2	54.1	0.0	36.4	0.0	0.0
Incremental Delay (d2), s/veh	0.0	10.0	6.9	12.6	0.0	22.4	0.0	0.0
Initial Queue Delay (d3), s/veh	0.0	0.0	0.0	0.0	0.0	0.0	0.0	0.0
Control Delay (d), s/veh	0.0	45.0	60.1	66.6	0.0	58.8	0.0	0.0
First-Term Queue (Q1), veh/ln	0.0	18.3	7.7	8.2	0.0	24.6	0.0	0.0
Second-Term Queue (Q2), veh/ln	0.0	2.1	0.6	1.1	0.0	5.0	0.0	0.0
Third-Term Queue (Q3), veh/ln	0.0	0.0	0.0	0.0	0.0	0.0	0.0	0.0
Percentile bk-of-que factor (f_B%)	0.000	1.000	1.000	1.000	0.000	1.000	0.000	0.000
Percentile Back of Queue (Q%), veh/ln	0.0	20.4	8.4	9.3	0.0	29.6	0.0	0.0
Percentile Storage Ratio (RQ%)	0.00	1.13	0.11	0.68	0.00	1.02	0.00	0.00
Initial Queue (Qb), veh	0.0	0.0	0.0	0.0	0.0	0.0	0.0	0.0
Final (Residual) Queue (Qe), veh	0.0	0.0	0.0	0.0	0.0	0.0	0.0	0.0
Saturated Delay (ds), s/veh	0.0	0.0	0.0	0.0	0.0	0.0	0.0	0.0
Saturated Queue (Qs), veh	0.0	0.0	0.0	0.0	0.0	0.0	0.0	0.0
Saturated Capacity (cs), veh/h	0.0	0.0	0.0	0.0	0.0	0.0	0.0	0.0
Initial Queue Clear Time (tc), h	0.0	0.0	0.0	0.0	0.0	0.0	0.0	0.0

Intersection Summary	
HCM Average Control Delay	59.5
HCM Level of Service	E

Movement	EBL	EBT	EBR	WBL	WBT	WBR	NEL	NET	NER	SWL	SWT	SWR
Lane Configurations												
Volume (veh/h)	35	5	0	0	4	12	61	1998	20	0	0	0
Sign Control		Stop			Stop			Free			Free	
Grade		0%			0%			0%			0%	
Peak Hour Factor	0.95	0.95	0.95	0.95	0.95	0.95	0.95	0.95	0.95	0.95	0.95	0.95
Hourly flow rate (vph)	37	5	0	0	4	13	64	2103	21	0	0	0
Pedestrians												
Lane Width (ft)												
Walking Speed (ft/s)												
Percent Blockage												
Right turn flare (veh)												
Median type								None			None	
Median storage veh)												
Upstream signal (ft)												
pX, platoon unblocked												
vC, conflicting volume	844	2253	0	2245	2242	712	0			2124		
vC1, stage 1 conf vol												
vC2, stage 2 conf vol												
vCu, unblocked vol	844	2253	0	2245	2242	712	0			2124		
tC, single (s)	7.5	6.5	6.9	7.5	6.5	6.9	4.1			4.1		
tC, 2 stage (s)												
tF (s)	3.5	4.0	3.3	3.5	4.0	3.3	2.2			2.2		
p0 queue free %	83	87	100	100	89	97	96			100		
cM capacity (veh/h)	221	39	1084	20	40	375	1622			253		

Direction, Lane #	EB 1	WB 1	NE 1	NE 2	NE 3
Volume Total	42	17	590	1052	547
Volume Left	37	0	64	0	0
Volume Right	0	13	0	0	21
cSH	140	121	1622	1700	1700
Volume to Capacity	0.30	0.14	0.04	0.62	0.32
Queue Length 95th (ft)	29	12	3	0	0
Control Delay (s)	41.4	39.5	1.2	0.0	0.0
Lane LOS	E	E	A		
Approach Delay (s)	41.4	39.5	0.3		
Approach LOS	E	E			

Intersection Summary			
Average Delay	1.4		
Intersection Capacity Utilization	55.8%	ICU Level of Service	B
Analysis Period (min)	15		

Movement	EBL	EBT	EBR	WBL	WBT	WBR	NEL	NET	NER	SWL	SWT	SWR
Lane Configurations												
Volume (veh/h)	0	4	0	0	91	0	2	2172	12	0	0	0
Sign Control		Stop			Stop			Free			Free	
Grade		0%			0%			0%			0%	
Peak Hour Factor	0.89	0.89	0.89	0.89	0.89	0.89	0.89	0.89	0.89	0.89	0.89	0.89
Hourly flow rate (vph)	0	4	0	0	102	0	2	2440	13	0	0	0
Pedestrians												
Lane Width (ft)												
Walking Speed (ft/s)												
Percent Blockage												
Right turn flare (veh)												
Median type								None			None	
Median storage veh)												
Upstream signal (ft)												
pX, platoon unblocked												
vC, conflicting volume	869	2458	0	2454	2452	820	0			2454		
vC1, stage 1 conf vol												
vC2, stage 2 conf vol												
vCu, unblocked vol	869	2458	0	2454	2452	820	0			2454		
tC, single (s)	7.5	6.5	6.9	7.5	6.5	6.9	4.1			4.1		
tC, 2 stage (s)												
tF (s)	3.5	4.0	3.3	3.5	4.0	3.3	2.2			2.2		
p0 queue free %	0	85	100	100	0	100	100			100		
cM capacity (veh/h)	0	30	1084	14	30	318	1622			187		

Direction, Lane #	EB 1	WB 1	NE 1	NE 2	NE 3
Volume Total	4	102	612	1220	624
Volume Left	0	0	2	0	0
Volume Right	0	0	0	0	13
cSH	30	30	1622	1700	1700
Volume to Capacity	0.15	3.36	0.00	0.72	0.37
Queue Length 95th (ft)	11	Err	0	0	0
Control Delay (s)	144.3	Err	0.0	0.0	0.0
Lane LOS	F	F	A		
Approach Delay (s)	144.3	Err	0.0		
Approach LOS	F	F			

Intersection Summary			
Average Delay	399.2		
Intersection Capacity Utilization	53.7%	ICU Level of Service	A
Analysis Period (min)	15		

Movement	EBL	EBR	NBL	NBT	SBT	SBR
Lane Configurations						
Volume (veh/h)	1	2	1	250	130	0
Sign Control	Stop			Free	Free	
Grade	0%			0%	0%	
Peak Hour Factor	0.92	0.92	0.92	0.92	0.92	0.92
Hourly flow rate (vph)	1	2	1	272	141	0
Pedestrians						
Lane Width (ft)						
Walking Speed (ft/s)						
Percent Blockage						
Right turn flare (veh)						
Median type				None	None	
Median storage veh)						
Upstream signal (ft)						
pX, platoon unblocked						
vC, conflicting volume	415	141	141			
vC1, stage 1 conf vol						
vC2, stage 2 conf vol						
vCu, unblocked vol	415	141	141			
tC, single (s)	6.4	6.2	4.1			
tC, 2 stage (s)						
tF (s)	3.5	3.3	2.2			
p0 queue free %	100	100	100			
cM capacity (veh/h)	593	907	1442			

Direction, Lane #	EB 1	NB 1	SB 1
Volume Total	3	273	141
Volume Left	1	1	0
Volume Right	2	0	0
cSH	771	1442	1700
Volume to Capacity	0.00	0.00	0.08
Queue Length 95th (ft)	0	0	0
Control Delay (s)	9.7	0.0	0.0
Lane LOS	A	A	
Approach Delay (s)	9.7	0.0	0.0
Approach LOS	A		

Intersection Summary			
Average Delay	0.1		
Intersection Capacity Utilization	24.0%	ICU Level of Service	A
Analysis Period (min)	15		

Movement	EBL	EBR	NBL	NBT	SBT	SBR
Lane Configurations						
Volume (veh/h)	4	1	1	252	129	1
Sign Control	Stop			Free	Free	
Grade	0%			0%	0%	
Peak Hour Factor	0.92	0.92	0.92	0.92	0.92	0.92
Hourly flow rate (vph)	4	1	1	274	140	1
Pedestrians						
Lane Width (ft)						
Walking Speed (ft/s)						
Percent Blockage						
Right turn flare (veh)						
Median type				None	None	
Median storage veh)						
Upstream signal (ft)						
pX, platoon unblocked						
vC, conflicting volume	417	141	141			
vC1, stage 1 conf vol						
vC2, stage 2 conf vol						
vCu, unblocked vol	417	141	141			
tC, single (s)	6.4	6.2	4.1			
tC, 2 stage (s)						
tF (s)	3.5	3.3	2.2			
p0 queue free %	99	100	100			
cM capacity (veh/h)	592	907	1442			

Direction, Lane #	EB 1	NB 1	SB 1
Volume Total	5	275	141
Volume Left	4	1	0
Volume Right	1	0	1
cSH	636	1442	1700
Volume to Capacity	0.01	0.00	0.08
Queue Length 95th (ft)	1	0	0
Control Delay (s)	10.7	0.0	0.0
Lane LOS	B	A	
Approach Delay (s)	10.7	0.0	0.0
Approach LOS	B		

Intersection Summary			
Average Delay	0.2		
Intersection Capacity Utilization	24.1%	ICU Level of Service	A
Analysis Period (min)	15		

Movement	EBL	EBR	NBL	NBT	SBT	SBR
Lane Configurations						
Volume (veh/h)	4	17	31	223	106	1
Sign Control	Stop			Free	Free	
Grade	0%			0%	0%	
Peak Hour Factor	0.92	0.92	0.92	0.92	0.92	0.92
Hourly flow rate (vph)	4	18	34	242	115	1
Pedestrians						
Lane Width (ft)						
Walking Speed (ft/s)						
Percent Blockage						
Right turn flare (veh)						
Median type				None	None	
Median storage veh)						
Upstream signal (ft)						
pX, platoon unblocked						
vC, conflicting volume	426	116	116			
vC1, stage 1 conf vol						
vC2, stage 2 conf vol						
vCu, unblocked vol	426	116	116			
tC, single (s)	6.4	6.2	4.1			
tC, 2 stage (s)						
tF (s)	3.5	3.3	2.2			
p0 queue free %	99	98	98			
cM capacity (veh/h)	572	937	1472			

Direction, Lane #	EB 1	NB 1	SB 1
Volume Total	23	276	116
Volume Left	4	34	0
Volume Right	18	0	1
cSH	835	1472	1700
Volume to Capacity	0.03	0.02	0.07
Queue Length 95th (ft)	2	2	0
Control Delay (s)	9.4	1.1	0.0
Lane LOS	A	A	
Approach Delay (s)	9.4	1.1	0.0
Approach LOS	A		

Intersection Summary			
Average Delay	1.2		
Intersection Capacity Utilization	30.1%	ICU Level of Service	A
Analysis Period (min)	15		

Movement	EBL	EBR	NBL	NBT	SBT	SBR
Lane Configurations						
Volume (veh/h)	19	24	25	187	72	31
Sign Control	Stop			Free	Free	
Grade	0%			0%	0%	
Peak Hour Factor	0.92	0.92	0.92	0.92	0.92	0.92
Hourly flow rate (vph)	21	26	27	203	78	34
Pedestrians						
Lane Width (ft)						
Walking Speed (ft/s)						
Percent Blockage						
Right turn flare (veh)						
Median type				None	None	
Median storage veh)						
Upstream signal (ft)						
pX, platoon unblocked						
vC, conflicting volume	353	95	112			
vC1, stage 1 conf vol						
vC2, stage 2 conf vol						
vCu, unblocked vol	353	95	112			
tC, single (s)	6.4	6.2	4.1			
tC, 2 stage (s)						
tF (s)	3.5	3.3	2.2			
p0 queue free %	97	97	98			
cM capacity (veh/h)	633	962	1478			

Direction, Lane #	EB 1	NB 1	SB 1
Volume Total	47	230	112
Volume Left	21	27	0
Volume Right	26	0	34
cSH	782	1478	1700
Volume to Capacity	0.06	0.02	0.07
Queue Length 95th (ft)	5	1	0
Control Delay (s)	9.9	1.0	0.0
Lane LOS	A	A	
Approach Delay (s)	9.9	1.0	0.0
Approach LOS	A		

Intersection Summary			
Average Delay	1.8		
Intersection Capacity Utilization	27.9%	ICU Level of Service	A
Analysis Period (min)	15		

Movement	EBL	EBT	EBR	WBL	WBT	WBR	NBL	NBT	NBR	SBL	SBT	SBR
Lane Configurations												
Sign Control		Stop			Stop			Stop			Stop	
Volume (vph)	3	100	58	35	104	2	24	161	22	2	4	4
Peak Hour Factor	0.92	0.92	0.92	0.92	0.92	0.92	0.92	0.92	0.92	0.92	0.92	0.92
Hourly flow rate (vph)	3	109	63	38	113	2	26	175	24	2	4	4

Direction, Lane #	EB 1	WB 1	NB 1	SB 1
Volume Total (vph)	175	153	225	11
Volume Left (vph)	3	38	26	2
Volume Right (vph)	63	2	24	4
Hadj (s)	-0.18	0.08	-0.01	-0.17
Departure Headway (s)	4.5	4.8	4.7	4.8
Degree Utilization, x	0.22	0.20	0.29	0.01
Capacity (veh/h)	747	708	725	670
Control Delay (s)	8.8	9.0	9.6	7.9
Approach Delay (s)	8.8	9.0	9.6	7.9
Approach LOS	A	A	A	A

Intersection Summary			
Delay	9.2		
HCM Level of Service	A		
Intersection Capacity Utilization	39.5%	ICU Level of Service	A
Analysis Period (min)	15		

HCM Unsignalized Intersection Capacity Analysis
1: SW 97th Ave. & SW 174th St.

2/18/2015

Movement	EBL	EBT	EBR	WBL	WBT	WBR	NBL	NBT	NBR	SBL	SBT	SBR
Lane Configurations												
Sign Control		Stop			Stop			Stop			Stop	
Volume (vph)	2	131	39	32	144	0	29	10	13	27	67	3
Peak Hour Factor	0.90	0.90	0.90	0.90	0.90	0.90	0.90	0.90	0.90	0.90	0.90	0.90
Hourly flow rate (vph)	2	146	43	36	160	0	32	11	14	30	74	3

Direction, Lane #	EB 1	WB 1	NB 1	SB 1
Volume Total (vph)	191	196	58	108
Volume Left (vph)	2	36	32	30
Volume Right (vph)	43	0	14	3
Hadj (s)	-0.10	0.07	0.00	0.07
Departure Headway (s)	4.5	4.6	5.0	5.0
Degree Utilization, x	0.24	0.25	0.08	0.15
Capacity (veh/h)	771	740	661	667
Control Delay (s)	8.8	9.2	8.4	8.8
Approach Delay (s)	8.8	9.2	8.4	8.8
Approach LOS	A	A	A	A

Intersection Summary			
Delay	8.9		
HCM Level of Service	A		
Intersection Capacity Utilization	34.2%	ICU Level of Service	A
Analysis Period (min)	15		

Lane Group	EBL	NBT	SBT	NET
Lane Group Flow (vph)	129	301	113	2371
v/c Ratio	0.76	0.57	0.27	0.81
Control Delay	106.8	24.7	60.8	33.8
Queue Delay	0.0	0.0	0.0	0.0
Total Delay	106.8	24.7	60.8	33.8
Queue Length 50th (ft)	155	104	114	816
Queue Length 95th (ft)	236	221	184	927
Internal Link Dist (ft)	257	1041	665	1300
Turn Bay Length (ft)				
Base Capacity (vph)	219	531	421	2939
Starvation Cap Reductn	0	0	0	0
Spillback Cap Reductn	0	0	0	0
Storage Cap Reductn	0	0	0	0
Reduced v/c Ratio	0.59	0.57	0.27	0.81

Intersection Summary

Movement	EBL	EBR	NBL	NBT	NBR	SBT	SBR	NEL2	NEL	NET	NER
Lane Configurations											
Volume (vph)	4	120	7	8	275	84	24	4	20	2210	42
Ideal Flow (vphpl)	1900	1900	1900	1900	1900	1900	1900	1900	1900	1900	1900
Total Lost time (s)	5.0			5.0		5.0				5.0	
Lane Util. Factor	1.00			1.00		1.00				0.91	
Frt	0.87			0.87		0.97				1.00	
Flt Protected	1.00			1.00		1.00				1.00	
Satd. Flow (prot)	1617			1622		1807				5068	
Flt Permitted	1.00			0.99		1.00				1.00	
Satd. Flow (perm)	1617			1614		1807				5068	
Peak-hour factor, PHF	0.96	0.96	0.96	0.96	0.96	0.96	0.96	0.96	0.96	0.96	0.96
Adj. Flow (vph)	4	125	7	8	286	88	25	4	21	2302	44
RTOR Reduction (vph)	0	0	0	155	0	0	0	0	0	1	0
Lane Group Flow (vph)	129	0	0	146	0	113	0	0	0	2370	0
Parking (#/hr)		0									
Turn Type	NA		Perm	NA		NA		Perm	Perm	NA	
Protected Phases	3			4		8				6	
Permitted Phases			4					6	6		
Actuated Green, G (s)	19.4			43.0		43.0				107.1	
Effective Green, g (s)	19.4			43.0		43.0				107.1	
Actuated g/C Ratio	0.11			0.23		0.23				0.58	
Clearance Time (s)	5.0			5.0		5.0				5.0	
Vehicle Extension (s)	3.0			3.0		3.0				3.0	
Lane Grp Cap (vph)	170			376		421				2942	
v/s Ratio Prot	c0.08					0.06					
v/s Ratio Perm				c0.09						0.47	
v/c Ratio	0.76			0.39		0.27				0.81	
Uniform Delay, d1	80.3			59.7		57.9				30.5	
Progression Factor	1.00			1.00		1.00				1.00	
Incremental Delay, d2	17.5			3.0		1.6				2.5	
Delay (s)	97.8			62.7		59.4				33.0	
Level of Service	F			E		E				C	
Approach Delay (s)	97.8			62.7		59.4				33.0	
Approach LOS	F			E		E				C	

Intersection Summary			
HCM Average Control Delay	39.9	HCM Level of Service	D
HCM Volume to Capacity ratio	0.69		
Actuated Cycle Length (s)	184.5	Sum of lost time (s)	15.0
Intersection Capacity Utilization	88.2%	ICU Level of Service	E
Analysis Period (min)	15		

c Critical Lane Group

Movement	EBL	EBR	NBL	NBT	SBT	SBR
Lane Configurations						
Volume (veh/h)	46	82	20	225	123	75
Sign Control	Stop			Free	Free	
Grade	0%			0%	0%	
Peak Hour Factor	0.92	0.92	0.92	0.92	0.92	0.92
Hourly flow rate (vph)	50	89	22	245	134	82
Pedestrians						
Lane Width (ft)						
Walking Speed (ft/s)						
Percent Blockage						
Right turn flare (veh)						
Median type				None	None	
Median storage veh)						
Upstream signal (ft)					1121	
pX, platoon unblocked						
vC, conflicting volume	462	174	215			
vC1, stage 1 conf vol						
vC2, stage 2 conf vol						
vCu, unblocked vol	462	174	215			
tC, single (s)	6.4	6.2	4.1			
tC, 2 stage (s)						
tF (s)	3.5	3.3	2.2			
p0 queue free %	91	90	98			
cM capacity (veh/h)	549	869	1355			

Direction, Lane #	EB 1	NB 1	SB 1
Volume Total	139	266	215
Volume Left	50	22	0
Volume Right	89	0	82
cSH	718	1355	1700
Volume to Capacity	0.19	0.02	0.13
Queue Length 95th (ft)	18	1	0
Control Delay (s)	11.2	0.8	0.0
Lane LOS	B	A	
Approach Delay (s)	11.2	0.8	0.0
Approach LOS	B		

Intersection Summary			
Average Delay	2.8		
Intersection Capacity Utilization	41.6%	ICU Level of Service	A
Analysis Period (min)	15		

Movement	WBL	WBR	NBT	NBR	SBL	SBT
Lane Configurations						
Volume (veh/h)	139	56	189	37	23	137
Sign Control	Stop		Free			Free
Grade	0%		0%			0%
Peak Hour Factor	0.94	0.94	0.94	0.94	0.94	0.94
Hourly flow rate (vph)	148	60	201	39	24	146
Pedestrians						
Lane Width (ft)						
Walking Speed (ft/s)						
Percent Blockage						
Right turn flare (veh)						
Median type			None			None
Median storage veh)						
Upstream signal (ft)						
pX, platoon unblocked						
vC, conflicting volume	415	221			240	
vC1, stage 1 conf vol						
vC2, stage 2 conf vol						
vCu, unblocked vol	415	221			240	
tC, single (s)	6.4	6.2			4.1	
tC, 2 stage (s)						
tF (s)	3.5	3.3			2.2	
p0 queue free %	75	93			98	
cM capacity (veh/h)	583	819			1326	

Direction, Lane #	WB 1	NB 1	SB 1
Volume Total	207	240	170
Volume Left	148	0	24
Volume Right	60	39	0
cSH	635	1700	1326
Volume to Capacity	0.33	0.14	0.02
Queue Length 95th (ft)	35	0	1
Control Delay (s)	13.4	0.0	1.3
Lane LOS	B		A
Approach Delay (s)	13.4	0.0	1.3
Approach LOS	B		

Intersection Summary			
Average Delay	4.8		
Intersection Capacity Utilization	41.8%	ICU Level of Service	A
Analysis Period (min)	15		

Movement	EBL	EBR	NBL	NBT	SBT	SBR
Lane Configurations						
Volume (veh/h)	15	54	15	225	190	94
Sign Control	Stop			Free	Free	
Grade	0%			0%	0%	
Peak Hour Factor	0.93	0.93	0.93	0.93	0.93	0.93
Hourly flow rate (vph)	16	58	16	242	204	101
Pedestrians						
Lane Width (ft)						
Walking Speed (ft/s)						
Percent Blockage						
Right turn flare (veh)						
Median type				None	None	
Median storage veh)						
Upstream signal (ft)				1230		
pX, platoon unblocked						
vC, conflicting volume	529	255	305			
vC1, stage 1 conf vol						
vC2, stage 2 conf vol						
vCu, unblocked vol	529	255	305			
tC, single (s)	6.4	6.2	4.1			
tC, 2 stage (s)						
tF (s)	3.5	3.3	2.2			
p0 queue free %	97	93	99			
cM capacity (veh/h)	504	784	1255			

Direction, Lane #	EB 1	NB 1	SB 1
Volume Total	74	258	305
Volume Left	16	16	0
Volume Right	58	0	101
cSH	699	1255	1700
Volume to Capacity	0.11	0.01	0.18
Queue Length 95th (ft)	9	1	0
Control Delay (s)	10.8	0.6	0.0
Lane LOS	B	A	
Approach Delay (s)	10.8	0.6	0.0
Approach LOS	B		

Intersection Summary			
Average Delay	1.5		
Intersection Capacity Utilization	35.0%	ICU Level of Service	A
Analysis Period (min)	15		

Movement	EBL	EBT	EBR	WBL	WBT	WBR	NBL	NBT	NBR	SBL	SBT	SBR
Lane Configurations												
Volume (veh/h)	7	6	40	53	30	6	3	232	32	2	211	22
Sign Control		Stop			Stop			Free			Free	
Grade		0%			0%			0%			0%	
Peak Hour Factor	0.87	0.87	0.87	0.87	0.87	0.87	0.87	0.87	0.87	0.87	0.87	0.87
Hourly flow rate (vph)	8	7	46	61	34	7	3	267	37	2	243	25
Pedestrians												
Lane Width (ft)												
Walking Speed (ft/s)												
Percent Blockage												
Right turn flare (veh)												
Median type								None			None	
Median storage veh)												
Upstream signal (ft)								904				
pX, platoon unblocked	0.93	0.93		0.93	0.93	0.93				0.93		
vC, conflicting volume	576	570	255	601	564	285	268			303		
vC1, stage 1 conf vol												
vC2, stage 2 conf vol												
vCu, unblocked vol	509	503	255	537	497	198	268			217		
tC, single (s)	7.1	6.5	6.2	7.1	6.5	6.2	4.1			4.1		
tC, 2 stage (s)												
tF (s)	3.5	4.0	3.3	3.5	4.0	3.3	2.2			2.2		
p0 queue free %	98	98	94	85	92	99	100			100		
cM capacity (veh/h)	411	437	783	393	441	787	1296			1261		

Direction, Lane #	EB 1	WB 1	NB 1	SB 1
Volume Total	61	102	307	270
Volume Left	8	61	3	2
Volume Right	46	7	37	25
cSH	648	423	1296	1261
Volume to Capacity	0.09	0.24	0.00	0.00
Queue Length 95th (ft)	8	23	0	0
Control Delay (s)	11.1	16.2	0.1	0.1
Lane LOS	B	C	A	A
Approach Delay (s)	11.1	16.2	0.1	0.1
Approach LOS	B	C		

Intersection Summary			
Average Delay	3.2		
Intersection Capacity Utilization	34.3%	ICU Level of Service	A
Analysis Period (min)	15		

Movement	EBL	EBT	EBR	WBL	WBT	WBR	NBL	NBT	NBR	SBL	SBT	SBR
Lane Configurations												
Volume (veh/h)	2	3	2	0	0	0	1	270	0	1	296	2
Sign Control		Stop			Stop			Free			Free	
Grade		0%			0%			0%			0%	
Peak Hour Factor	0.91	0.91	0.91	0.91	0.91	0.91	0.91	0.91	0.91	0.91	0.91	0.91
Hourly flow rate (vph)	2	3	2	0	0	0	1	297	0	1	325	2
Pedestrians												
Lane Width (ft)												
Walking Speed (ft/s)												
Percent Blockage												
Right turn flare (veh)												
Median type								None			None	
Median storage veh)												
Upstream signal (ft)								601				
pX, platoon unblocked	0.90	0.90		0.90	0.90	0.90				0.90		
vC, conflicting volume	627	627	326	631	629	297	327			297		
vC1, stage 1 conf vol												
vC2, stage 2 conf vol												
vCu, unblocked vol	529	529	326	533	530	161	327			161		
tC, single (s)	7.1	6.5	6.2	7.1	6.5	6.2	4.1			4.1		
tC, 2 stage (s)												
tF (s)	3.5	4.0	3.3	3.5	4.0	3.3	2.2			2.2		
p0 queue free %	99	99	100	100	100	100	100			100		
cM capacity (veh/h)	413	408	715	407	408	794	1232			1274		

Direction, Lane #	EB 1	WB 1	NB 1	SB 1
Volume Total	8	0	298	329
Volume Left	2	0	1	1
Volume Right	2	0	0	2
cSH	467	1700	1232	1274
Volume to Capacity	0.02	0.00	0.00	0.00
Queue Length 95th (ft)	1	0	0	0
Control Delay (s)	12.8	0.0	0.0	0.0
Lane LOS	B	A	A	A
Approach Delay (s)	12.8	0.0	0.0	0.0
Approach LOS	B	A		

Intersection Summary			
Average Delay	0.2		
Intersection Capacity Utilization	26.4%	ICU Level of Service	A
Analysis Period (min)	15		

Movement	EBL	EBT	EBR	WBL	WBT	WBR	NBL	NBT	NBR	SBL	SBT	SBR
Lane Configurations												
Volume (veh/h)	10	1	65	1	2	1	10	262	1	1	272	22
Sign Control		Stop			Stop			Free			Free	
Grade		0%			0%			0%			0%	
Peak Hour Factor	0.93	0.93	0.93	0.93	0.93	0.93	0.93	0.93	0.93	0.93	0.93	0.93
Hourly flow rate (vph)	11	1	70	1	2	1	11	282	1	1	292	24
Pedestrians												
Lane Width (ft)												
Walking Speed (ft/s)												
Percent Blockage												
Right turn flare (veh)												
Median type								None			None	
Median storage veh)												
Upstream signal (ft)								300				
pX, platoon unblocked	0.85	0.85		0.85	0.85	0.85				0.85		
vC, conflicting volume	612	611	304	681	622	282	316			283		
vC1, stage 1 conf vol												
vC2, stage 2 conf vol												
vCu, unblocked vol	454	452	304	534	465	65	316			66		
tC, single (s)	7.1	6.5	6.2	7.1	6.5	6.2	4.1			4.1		
tC, 2 stage (s)												
tF (s)	3.5	4.0	3.3	3.5	4.0	3.3	2.2			2.2		
p0 queue free %	98	100	90	100	99	100	99			100		
cM capacity (veh/h)	433	423	735	347	416	848	1244			1304		

Direction, Lane #	EB 1	WB 1	NB 1	SB 1
Volume Total	82	4	294	317
Volume Left	11	1	11	1
Volume Right	70	1	1	24
cSH	668	451	1244	1304
Volume to Capacity	0.12	0.01	0.01	0.00
Queue Length 95th (ft)	10	1	1	0
Control Delay (s)	11.1	13.1	0.4	0.0
Lane LOS	B	B	A	A
Approach Delay (s)	11.1	13.1	0.4	0.0
Approach LOS	B	B		

Intersection Summary			
Average Delay	1.6		
Intersection Capacity Utilization	33.2%	ICU Level of Service	A
Analysis Period (min)	15		

Lane Group	EBL	EBT	EBR	WBL	WBT	NBL	NBT	SBL	SBT
Lane Group Flow (vph)	112	576	185	447	602	161	457	25	348
v/c Ratio	0.17	0.86	0.33	0.88	0.45	0.49	0.68	0.09	0.63
Control Delay	11.0	57.3	20.1	42.5	36.7	48.1	47.4	42.9	64.8
Queue Delay	0.0	0.0	0.0	0.0	0.0	0.0	0.0	0.0	0.0
Total Delay	11.0	57.3	20.1	42.5	36.7	48.1	47.4	42.9	64.8
Queue Length 50th (ft)	42	471	60	263	238	124	155	18	170
Queue Length 95th (ft)	66	#714	140	399	334	220	245	48	256
Internal Link Dist (ft)		1915			531		229		156
Turn Bay Length (ft)	130			95		155		130	
Base Capacity (vph)	749	834	686	660	1639	326	693	297	570
Starvation Cap Reductn	0	0	0	0	0	0	0	0	0
Spillback Cap Reductn	0	0	0	0	0	0	0	0	0
Storage Cap Reductn	0	0	0	0	0	0	0	0	0
Reduced v/c Ratio	0.15	0.69	0.27	0.68	0.37	0.49	0.66	0.08	0.61

Intersection Summary

95th percentile volume exceeds capacity, queue may be longer.
Queue shown is maximum after two cycles.

Movement	EBL	EBT	EBR	WBL	WBT	WBR	NBL	NBT	NBR	SBL	SBT	SBR
Lane Configurations												
Volume (vph)	103	530	170	411	543	11	148	197	224	23	274	46
Ideal Flow (vphpl)	1900	1900	1900	1900	1900	1900	1900	1900	1900	1900	1900	1900
Total Lost time (s)	3.0	3.0	5.0	3.0	3.0		3.0	3.0		3.0	3.0	
Lane Util. Factor	1.00	1.00	1.00	1.00	0.95		1.00	0.95		1.00	0.95	
Frt	1.00	1.00	0.85	1.00	1.00		1.00	0.92		1.00	0.98	
Flt Protected	0.95	1.00	1.00	0.95	1.00		0.95	1.00		0.95	1.00	
Satd. Flow (prot)	1770	1863	1583	1770	3529		1770	3257		1770	3463	
Flt Permitted	0.34	1.00	1.00	0.19	1.00		0.36	1.00		0.42	1.00	
Satd. Flow (perm)	632	1863	1583	359	3529		679	3257		774	3463	
Peak-hour factor, PHF	0.92	0.92	0.92	0.92	0.92	0.92	0.92	0.92	0.92	0.92	0.92	0.92
Adj. Flow (vph)	112	576	185	447	590	12	161	214	243	25	298	50
RTOR Reduction (vph)	0	0	72	0	1	0	0	114	0	0	8	0
Lane Group Flow (vph)	112	576	113	447	601	0	161	343	0	25	340	0
Turn Type	pm+pt	NA	custom	pm+pt	NA		custom	NA		custom	NA	
Protected Phases	1 2	2 4		1 3	3 4		5 6	6 8		5 7	7 8	
Permitted Phases	2 4		4	3 4			8			8		
Actuated Green, G (s)	81.3	50.8	45.0	77.7	53.2		36.5	21.9		31.0	22.4	
Effective Green, g (s)	81.3	50.8	45.0	77.7	53.2		36.5	21.9		31.0	22.4	
Actuated g/C Ratio	0.55	0.34	0.30	0.53	0.36		0.25	0.15		0.21	0.15	
Clearance Time (s)			5.0									
Vehicle Extension (s)			3.0									
Lane Grp Cap (vph)	628	641	482	501	1271		314	483		259	525	
v/s Ratio Prot	0.04	c0.31		c0.20	0.17		c0.07	0.11		0.01	c0.10	
v/s Ratio Perm	0.05		0.07	0.27			0.06			0.01		
v/c Ratio	0.18	0.90	0.24	0.89	0.47		0.51	0.71		0.10	0.65	
Uniform Delay, d1	16.3	46.0	38.5	32.4	36.4		46.2	59.9		46.8	58.9	
Progression Factor	1.00	1.00	1.00	1.00	1.00		1.00	1.00		1.00	1.00	
Incremental Delay, d2	0.1	15.3	0.3	17.9	0.3		1.4	4.8		0.2	2.8	
Delay (s)	16.4	61.3	38.7	50.3	36.7		47.6	64.6		46.9	61.7	
Level of Service	B	E	D	D	D		D	E		D	E	
Approach Delay (s)		50.8			42.5			60.2			60.7	
Approach LOS		D			D			E			E	

Intersection Summary			
HCM Average Control Delay	51.1	HCM Level of Service	D
HCM Volume to Capacity ratio	0.77		
Actuated Cycle Length (s)	147.7	Sum of lost time (s)	18.0
Intersection Capacity Utilization	81.2%	ICU Level of Service	D
Analysis Period (min)	15		
c Critical Lane Group			

Movement	EBL	EBT	WBT	WBR	SBL	SBR
Lane Configurations						
Volume (veh/h)	296	623	763	20	39	218
Sign Control		Free	Free		Stop	
Grade		0%	0%		0%	
Peak Hour Factor	0.96	0.96	0.96	0.96	0.96	0.96
Hourly flow rate (vph)	308	649	795	21	41	227
Pedestrians						
Lane Width (ft)						
Walking Speed (ft/s)						
Percent Blockage						
Right turn flare (veh)						
Median type		None	None			
Median storage veh)						
Upstream signal (ft)		611				
pX, platoon unblocked					0.75	
vC, conflicting volume	816				2071	805
vC1, stage 1 conf vol						
vC2, stage 2 conf vol						
vCu, unblocked vol	816				2260	805
tC, single (s)	4.1				6.4	6.2
tC, 2 stage (s)						
tF (s)	2.2				3.5	3.3
p0 queue free %	62				0	41
cM capacity (veh/h)	812				21	382

Direction, Lane #	EB 1	EB 2	WB 1	SB 1
Volume Total	308	649	816	268
Volume Left	308	0	0	41
Volume Right	0	0	21	227
cSH	812	1700	1700	106
Volume to Capacity	0.38	0.38	0.48	2.53
Queue Length 95th (ft)	45	0	0	609
Control Delay (s)	12.1	0.0	0.0	779.3
Lane LOS	B			F
Approach Delay (s)	3.9		0.0	779.3
Approach LOS				F

Intersection Summary			
Average Delay	104.1		
Intersection Capacity Utilization	83.4%	ICU Level of Service	E
Analysis Period (min)	15		

Lane Group	EBL	EBT	WBL	WBT	NBL	NBT	SBL	SBT
Lane Group Flow (vph)	228	586	260	536	84	1841	222	2592
v/c Ratio	0.74	0.96	0.95	0.94	0.88	0.83	0.91	0.98
Control Delay	89.9	103.7	117.7	101.4	98.3	49.2	95.8	55.9
Queue Delay	0.0	0.0	0.0	0.0	0.0	0.0	0.0	0.0
Total Delay	89.9	103.7	117.7	101.4	98.3	49.2	95.8	55.9
Queue Length 50th (ft)	274	385	357	367	54	735	224	1141
Queue Length 95th (ft)	382	#512	#562	#484	#175	796	#385	#1233
Internal Link Dist (ft)		364		1915		469		768
Turn Bay Length (ft)			286		160		130	
Base Capacity (vph)	309	613	281	585	96	2216	255	2649
Starvation Cap Reductn	0	0	0	0	0	0	0	0
Spillback Cap Reductn	0	0	0	0	0	0	0	0
Storage Cap Reductn	0	0	0	0	0	0	0	0
Reduced v/c Ratio	0.74	0.96	0.93	0.92	0.88	0.83	0.87	0.98

Intersection Summary

95th percentile volume exceeds capacity, queue may be longer.
Queue shown is maximum after two cycles.

Movement	EBL	EBT	EBR	WBL	WBT	WBR	NBL	NBT	NBR	SBL	SBT	SBR
Lane Configurations												
Volume (vph)	210	486	53	332	388	12	77	1292	402	204	2077	307
Ideal Flow (vphpl)	1900	1900	1900	1900	1900	1900	1900	1900	1900	1900	1900	1900
Total Lost time (s)	5.0	5.0		5.0	5.0		3.0	5.0		3.0	5.0	
Lane Util. Factor	1.00	0.95		0.91	0.91		1.00	0.91		1.00	0.91	
Frt	1.00	0.99		1.00	1.00		1.00	0.96		1.00	0.98	
Flt Protected	0.95	1.00		0.95	0.99		0.95	1.00		0.95	1.00	
Satd. Flow (prot)	1770	3487		1610	3346		1770	4904		1770	4987	
Flt Permitted	0.95	1.00		0.95	0.99		0.05	1.00		0.05	1.00	
Satd. Flow (perm)	1770	3487		1610	3346		88	4904		85	4987	
Peak-hour factor, PHF	0.92	0.92	0.92	0.92	0.92	0.92	0.92	0.92	0.92	0.92	0.92	0.92
Adj. Flow (vph)	228	528	58	361	422	13	84	1404	437	222	2258	334
RTOR Reduction (vph)	0	4	0	0	1	0	0	29	0	0	10	0
Lane Group Flow (vph)	228	582	0	260	535	0	84	1812	0	222	2582	0
Turn Type	Split	NA		Split	NA		pm+pt	NA		pm+pt	NA	
Protected Phases	4	4		8	8		5	2		1	6	
Permitted Phases							2			6		
Actuated Green, G (s)	32.8	32.8		32.3	32.3		90.4	84.4		109.1	100.1	
Effective Green, g (s)	32.8	32.8		32.3	32.3		90.4	84.4		109.1	100.1	
Actuated g/C Ratio	0.17	0.17		0.17	0.17		0.48	0.45		0.58	0.53	
Clearance Time (s)	5.0	5.0		5.0	5.0		3.0	5.0		3.0	5.0	
Vehicle Extension (s)	3.0	3.0		3.0	3.0		3.0	3.0		3.0	3.0	
Lane Grp Cap (vph)	307	605		275	571		95	2188		242	2638	
v/s Ratio Prot	0.13	c0.17		c0.16	0.16		0.03	0.37		c0.11	c0.52	
v/s Ratio Perm							0.39			0.42		
v/c Ratio	0.74	0.96		0.95	0.94		0.88	0.83		0.92	0.98	
Uniform Delay, d1	74.2	77.6		77.6	77.4		44.6	46.0		64.4	43.5	
Progression Factor	1.00	1.00		1.00	1.00		1.00	1.00		1.00	1.00	
Incremental Delay, d2	9.3	27.2		39.4	23.0		56.2	3.8		35.9	12.8	
Delay (s)	83.5	104.7		117.0	100.5		100.8	49.8		100.3	56.3	
Level of Service	F	F		F	F		F	D		F	E	
Approach Delay (s)		98.8			105.9			52.0			59.8	
Approach LOS		F			F			D			E	

Intersection Summary			
HCM Average Control Delay	68.2	HCM Level of Service	E
HCM Volume to Capacity ratio	0.95		
Actuated Cycle Length (s)	189.2	Sum of lost time (s)	13.0
Intersection Capacity Utilization	96.0%	ICU Level of Service	F
Analysis Period (min)	15		
c Critical Lane Group			

Movement	EBL	EBT	EBR	WBL	WBT	WBR	NBL	NBT	NBR	SBL	SBT	SBR
Lane Configurations												
Volume (vph)	210	486	53	332	388	12	77	1292	402	204	2077	307
Movement Number	7	4	14	3	8	18	5	2	12	1	6	16
Initial Queue, veh	0	0	0	0	0	0	0	0	0	0	0	0
Ped-Bike Adj. Factor (A_pbT)	1.00		1.00	1.00		1.00	1.00		1.00	1.00		1.00
Parking, Bus Adj. Factors	1.00	1.00	1.00	1.00	1.00	1.00	1.00	1.00	1.00	1.00	1.00	1.00
Adj. Sat. Flow Rate, veh/h/ln	1863	1863	1863	1863	1863	1863	1863	1863	1863	1863	1863	1863
Lanes	1	2	0	1	2	0	1	3	0	1	3	0
Lane Assignment												
Capacity, veh/h	304	566	62	311	630	19	97	1792	554	241	2363	340
Proportion Arriving On Green	0.17	0.17	0.17	0.18	0.18	0.18	0.03	0.47	0.47	0.09	0.53	0.53
Movement Delay, s/veh	83.7	109.1	111.0	179.3	77.6	77.8	95.6	46.3	50.6	84.0	53.2	69.0
Movement LOS	F	F	F	F	E	E	F	D	D	F	D	E
Approach Volume, veh/h		814			796			1925			2813	
Approach Delay, s/veh		102.7			123.8			49.8			60.7	
Approach LOS		F			F			D			E	

Timer:	1	2	3	4	5	6	7	8
Assigned Phase	1	2	8	4	5	6		
Case No	1.1	4.0	10.0	10.0	1.1	4.0		
Phase Duration (G+Y+Rc), s	20.39	92.56	38.00	37.24	9.00	103.95		
Change Period (Y+Rc), s	3.00	5.00	5.00	5.00	3.00	5.00		
Max. Allowable Headway (MAH), s	4.00	3.96	3.95	3.95	4.00	3.96		
Maximum Green Setting (Gmax), s	23.00	83.00	33.00	33.00	6.00	100.00		
Max. Queue Clearance Time (g_c+I1), s	17.05	60.35	35.00	31.80	6.69	97.44		
Green Extension Time (g_e), s	0.34	20.54	0.00	0.44	0.00	1.51		
Probability of Phase Call (p_c)	1.000	1.000	1.000	1.000	0.987	1.000		
Probability of Max Out (p_x)	0.260	0.907	1.000	1.000	1.000	1.000		

Left-Turn Movement Data					
Assigned Movement	1		3	7	5
Mvmt. Sat Flow, veh/h	1774.04		1774.04	1774.04	1774.04

Through Movement Data					
Assigned Movement		2	8	4	6
Mvmt. Sat Flow, veh/h		3852.35	3594.91	3303.01	4493.28

Right-Turn Movement Data					
Assigned Movement		12	18	14	16
Mvmt. Sat Flow, veh/h		1190.50	111.00	359.11	645.71

Left Lane Group Data								
Assigned Movement	1	0	3	7	5	0	0	0
Lane Assignment	L (Pr/Pm)		L	LL (Pr/Pm)				
Lanes in Group	1	0	1	1	1	0	0	0
Group Volume (v), veh/h	221.7	0.0	360.9	228.3	83.7	0.0	0.0	0.0
Group Sat. Flow (s), veh/h/ln	1774.0	0.0	1774.0	1774.0	1774.0	0.0	0.0	0.0
Queue Serve Time (g_s), s	15.0	0.0	33.0	23.0	4.7	0.0	0.0	0.0
Cycle Queue Clear Time (g_c), s	15.0	0.0	33.0	23.0	4.7	0.0	0.0	0.0

Perm LT Sat Flow Rate (s_l), veh/h/ln	250.4	0.0	1774.0	1774.0	119.3	0.0	0.0	0.0
Shared LT Sat Flow (s_sh), veh/h/ln	0.0	0.0	0.0	0.0	0.0	0.0	0.0	0.0
Perm LT Eff. Green (g_p), s	100.9	0.0	0.0	0.0	87.6	0.0	0.0	0.0
Perm LT Serve Time (g_u), s	29.2	0.0	0.0	0.0	3.5	0.0	0.0	0.0
Perm LT Que Serve Time (g_ps), s	29.2	0.0	0.0	0.0	3.5	0.0	0.0	0.0
Time to First Blk (g_f), s	0.0	0.0	0.0	0.0	0.0	0.0	0.0	0.0
Serve Time pre Blk (g_fs), s	0.0	0.0	0.0	0.0	0.0	0.0	0.0	0.0
Proportion LT Inside Lane (P_L)	1.000	0.000	1.000	1.000	1.000	0.000	0.000	0.000
Lane Group Capacity (c), veh/h	241.1	0.0	311.1	303.9	97.0	0.0	0.0	0.0
Volume-to-Capacity Ratio (X)	0.920	0.000	1.160	0.751	0.862	0.000	0.000	0.000
Available Capacity (c_a), veh/h	293.9	0.0	311.1	311.1	97.0	0.0	0.0	0.0
Upstream Filter Factor (I)	1.000	0.000	1.000	1.000	1.000	0.000	0.000	0.000
Uniform Delay (d1), s/veh	54.9	0.0	77.6	74.2	45.3	0.0	0.0	0.0
Incremental Delay (d2), s/veh	29.1	0.0	101.7	9.6	50.3	0.0	0.0	0.0
Initial Queue Delay (d3), s/veh	0.0	0.0	0.0	0.0	0.0	0.0	0.0	0.0
Control Delay (d), s/veh	84.0	0.0	179.3	83.7	95.6	0.0	0.0	0.0
First-Term Queue (Q1), veh/ln	6.7	0.0	15.2	10.6	2.1	0.0	0.0	0.0
Second-Term Queue (Q2), veh/ln	2.0	0.0	8.8	0.8	1.4	0.0	0.0	0.0
Third-Term Queue (Q3), veh/ln	0.0	0.0	0.0	0.0	0.0	0.0	0.0	0.0
Percentile bk-of-que factor (f_B%)	1.000	0.000	1.000	1.000	1.000	0.000	0.000	0.000
Percentile Back of Queue (Q%), veh/ln	8.6	0.0	24.0	11.4	3.4	0.0	0.0	0.0
Percentile Storage Ratio (RQ%)	1.69	0.00	2.13	0.84	0.54	0.00	0.00	0.00
Initial Queue (Qb), veh	0.0	0.0	0.0	0.0	0.0	0.0	0.0	0.0
Final (Residual) Queue (Qe), veh	0.0	0.0	12.4	0.0	0.0	0.0	0.0	0.0
Saturated Delay (ds), s/veh	0.0	0.0	0.0	0.0	0.0	0.0	0.0	0.0
Saturated Queue (Qs), veh	0.0	0.0	0.0	0.0	0.0	0.0	0.0	0.0
Saturated Capacity (cs), veh/h	0.0	0.0	0.0	0.0	0.0	0.0	0.0	0.0
Initial Queue Clear Time (tc), h	0.0	0.0	0.3	0.0	0.0	0.0	0.0	0.0

Middle Lane Group Data								
Assigned Movement	0	2	8	4	0	6	0	0
Lane Assignment		T	T	T		T		
Lanes in Group	0	2	1	1	0	2	0	0
Group Volume (v), veh/h	0.0	1234.7	218.2	297.2	0.0	1687.6	0.0	0.0
Group Sat. Flow (s), veh/h/ln	0.0	1695.1	1862.7	1862.7	0.0	1695.1	0.0	0.0
Queue Serve Time (g_s), s	0.0	57.6	20.6	29.6	0.0	88.4	0.0	0.0
Cycle Queue Clear Time (g_c), s	0.0	57.6	20.6	29.6	0.0	88.4	0.0	0.0
Lane Group Capacity (c), veh/h	0.0	1577.4	326.6	319.1	0.0	1782.6	0.0	0.0
Volume-to-Capacity Ratio (X)	0.000	0.783	0.668	0.931	0.000	0.947	0.000	0.000
Available Capacity (c_a), veh/h	0.0	1577.4	326.6	326.6	0.0	1801.5	0.0	0.0
Upstream Filter Factor (I)	0.000	1.000	1.000	1.000	0.000	1.000	0.000	0.000
Uniform Delay (d1), s/veh	0.0	42.3	72.5	76.9	0.0	42.1	0.0	0.0
Incremental Delay (d2), s/veh	0.0	4.0	5.1	32.2	0.0	11.1	0.0	0.0
Initial Queue Delay (d3), s/veh	0.0	0.0	0.0	0.0	0.0	0.0	0.0	0.0
Control Delay (d), s/veh	0.0	46.3	77.6	109.1	0.0	53.2	0.0	0.0
First-Term Queue (Q1), veh/ln	0.0	24.3	9.9	14.3	0.0	36.8	0.0	0.0
Second-Term Queue (Q2), veh/ln	0.0	0.9	0.5	2.9	0.0	2.7	0.0	0.0
Third-Term Queue (Q3), veh/ln	0.0	0.0	0.0	0.0	0.0	0.0	0.0	0.0
Percentile bk-of-que factor (f_B%)	0.000	1.000	1.000	1.000	0.000	1.000	0.000	0.000
Percentile Back of Queue (Q%), veh/ln	0.0	25.2	10.4	17.2	0.0	39.5	0.0	0.0
Percentile Storage Ratio (RQ%)	0.00	1.40	0.14	1.26	0.00	1.37	0.00	0.00

Initial Queue (Qb), veh	0.0	0.0	0.0	0.0	0.0	0.0	0.0	0.0
Final (Residual) Queue (Qe), veh	0.0	0.0	0.0	0.0	0.0	0.0	0.0	0.0
Saturated Delay (ds), s/veh	0.0	0.0	0.0	0.0	0.0	0.0	0.0	0.0
Saturated Queue (Qs), veh	0.0	0.0	0.0	0.0	0.0	0.0	0.0	0.0
Saturated Capacity (cs), veh/h	0.0	0.0	0.0	0.0	0.0	0.0	0.0	0.0
Initial Queue Clear Time (tc), h	0.0	0.0	0.0	0.0	0.0	0.0	0.0	0.0

Right Lane Group Data								
Assigned Movement	0	12	18	14	0	16	0	0
Lane Assignment		T+R	T+R	T+R		T+R		
Lanes in Group	0	1	1	1	0	1	0	0
Group Volume (v), veh/h	0.0	606.6	216.6	288.7	0.0	903.8	0.0	0.0
Group Sat. Flow (s), veh/h/ln	0.0	1652.7	1843.2	1799.4	0.0	1748.8	0.0	0.0
Queue Serve Time (g_s), s	0.0	58.4	20.7	29.8	0.0	95.4	0.0	0.0
Cycle Queue Clear Time (g_c), s	0.0	58.4	20.7	29.8	0.0	95.4	0.0	0.0
Prot RT Sat Flow Rate (s_R), veh/h/ln	0.0	0.0	0.0	0.0	0.0	0.0	0.0	0.0
Prot RT Eff. Green (g_R), s	0.0	0.0	0.0	0.0	0.0	0.0	0.0	0.0
Proportion RT Outside Lane (P_R)	0.000	0.720	0.060	0.200	0.000	0.369	0.000	0.000
Lane Group Capacity (c), veh/h	0.0	768.9	323.2	308.2	0.0	919.5	0.0	0.0
Volume-to-Capacity Ratio (X)	0.000	0.789	0.670	0.936	0.000	0.983	0.000	0.000
Available Capacity (c_a), veh/h	0.0	768.9	323.2	315.5	0.0	929.3	0.0	0.0
Upstream Filter Factor (I)	0.000	1.000	1.000	1.000	0.000	1.000	0.000	0.000
Uniform Delay (d1), s/veh	0.0	42.5	72.5	77.0	0.0	43.8	0.0	0.0
Incremental Delay (d2), s/veh	0.0	8.1	5.3	34.0	0.0	25.2	0.0	0.0
Initial Queue Delay (d3), s/veh	0.0	0.0	0.0	0.0	0.0	0.0	0.0	0.0
Control Delay (d), s/veh	0.0	50.6	77.8	111.0	0.0	69.0	0.0	0.0
First-Term Queue (Q1), veh/ln	0.0	24.0	9.9	13.9	0.0	41.0	0.0	0.0
Second-Term Queue (Q2), veh/ln	0.0	1.7	0.5	2.9	0.0	6.4	0.0	0.0
Third-Term Queue (Q3), veh/ln	0.0	0.0	0.0	0.0	0.0	0.0	0.0	0.0
Percentile bk-of-que factor (f_B%)	0.000	1.000	1.000	1.000	0.000	1.000	0.000	0.000
Percentile Back of Queue (Q%), veh/ln	0.0	25.7	10.3	16.8	0.0	47.4	0.0	0.0
Percentile Storage Ratio (RQ%)	0.00	1.43	0.14	1.24	0.00	1.64	0.00	0.00
Initial Queue (Qb), veh	0.0	0.0	0.0	0.0	0.0	0.0	0.0	0.0
Final (Residual) Queue (Qe), veh	0.0	0.0	0.0	0.0	0.0	0.0	0.0	0.0
Saturated Delay (ds), s/veh	0.0	0.0	0.0	0.0	0.0	0.0	0.0	0.0
Saturated Queue (Qs), veh	0.0	0.0	0.0	0.0	0.0	0.0	0.0	0.0
Saturated Capacity (cs), veh/h	0.0	0.0	0.0	0.0	0.0	0.0	0.0	0.0
Initial Queue Clear Time (tc), h	0.0	0.0	0.0	0.0	0.0	0.0	0.0	0.0

Intersection Summary	
HCM Average Control Delay	70.7
HCM Level of Service	E

Movement	EBL	EBT	EBR	WBL	WBT	WBR	NEL	NET	NER	SWL	SWT	SWR
Lane Configurations												
Volume (veh/h)	29	22	0	0	8	15	38	1810	19	0	0	0
Sign Control		Stop			Stop			Free			Free	
Grade		0%			0%			0%			0%	
Peak Hour Factor	0.93	0.93	0.93	0.93	0.93	0.93	0.93	0.93	0.93	0.93	0.93	0.93
Hourly flow rate (vph)	31	24	0	0	9	16	41	1946	20	0	0	0
Pedestrians												
Lane Width (ft)												
Walking Speed (ft/s)												
Percent Blockage												
Right turn flare (veh)												
Median type								None			None	
Median storage veh)												
Upstream signal (ft)												
pX, platoon unblocked												
vC, conflicting volume	751	2048	0	2050	2038	659	0			1967		
vC1, stage 1 conf vol												
vC2, stage 2 conf vol												
vCu, unblocked vol	751	2048	0	2050	2038	659	0			1967		
tC, single (s)	7.5	6.5	6.9	7.5	6.5	6.9	4.1			4.1		
tC, 2 stage (s)												
tF (s)	3.5	4.0	3.3	3.5	4.0	3.3	2.2			2.2		
p0 queue free %	87	56	100	100	84	96	97			100		
cM capacity (veh/h)	248	54	1084	21	55	406	1622			292		

Direction, Lane #	EB 1	WB 1	NE 1	NE 2	NE 3
Volume Total	55	25	527	973	507
Volume Left	31	0	41	0	0
Volume Right	0	16	0	0	20
cSH	97	125	1622	1700	1700
Volume to Capacity	0.57	0.20	0.03	0.57	0.30
Queue Length 95th (ft)	65	17	2	0	0
Control Delay (s)	82.2	40.6	0.8	0.0	0.0
Lane LOS	F	E	A		
Approach Delay (s)	82.2	40.6	0.2		
Approach LOS	F	E			

Intersection Summary			
Average Delay	2.8		
Intersection Capacity Utilization	52.3%	ICU Level of Service	A
Analysis Period (min)	15		

Movement	EBL	EBT	EBR	WBL	WBT	WBR	NEL	NET	NER	SWL	SWT	SWR
Lane Configurations												
Volume (veh/h)	0	25	0	0	90	0	1	1923	15	0	0	0
Sign Control		Stop			Stop			Free			Free	
Grade		0%			0%			0%			0%	
Peak Hour Factor	0.91	0.91	0.91	0.91	0.91	0.91	0.91	0.91	0.91	0.91	0.91	0.91
Hourly flow rate (vph)	0	27	0	0	99	0	1	2113	16	0	0	0
Pedestrians												
Lane Width (ft)												
Walking Speed (ft/s)												
Percent Blockage												
Right turn flare (veh)												
Median type								None			None	
Median storage veh)												
Upstream signal (ft)												
pX, platoon unblocked												
vC, conflicting volume	756	2132	0	2137	2124	713	0			2130		
vC1, stage 1 conf vol												
vC2, stage 2 conf vol												
vCu, unblocked vol	756	2132	0	2137	2124	713	0			2130		
tC, single (s)	7.5	6.5	6.9	7.5	6.5	6.9	4.1			4.1		
tC, 2 stage (s)												
tF (s)	3.5	4.0	3.3	3.5	4.0	3.3	2.2			2.2		
p0 queue free %	0	44	100	100	0	100	100			100		
cM capacity (veh/h)	0	49	1084	15	49	374	1622			252		

Direction, Lane #	EB 1	WB 1	NE 1	NE 2	NE 3
Volume Total	27	99	529	1057	545
Volume Left	0	0	1	0	0
Volume Right	0	0	0	0	16
cSH	49	49	1622	1700	1700
Volume to Capacity	0.56	2.00	0.00	0.62	0.32
Queue Length 95th (ft)	54	248	0	0	0
Control Delay (s)	148.7	644.3	0.0	0.0	0.0
Lane LOS	F	F	A		
Approach Delay (s)	148.7	644.3	0.0		
Approach LOS	F	F			

Intersection Summary			
Average Delay	30.0		
Intersection Capacity Utilization	48.9%	ICU Level of Service	A
Analysis Period (min)	15		

Movement	EBL	EBR	NBL	NBT	SBT	SBR
Lane Configurations						
Volume (veh/h)	1	1	1	266	226	2
Sign Control	Stop			Free	Free	
Grade	0%			0%	0%	
Peak Hour Factor	0.92	0.92	0.92	0.92	0.92	0.92
Hourly flow rate (vph)	1	1	1	289	246	2
Pedestrians						
Lane Width (ft)						
Walking Speed (ft/s)						
Percent Blockage						
Right turn flare (veh)						
Median type				None	None	
Median storage veh)						
Upstream signal (ft)						
pX, platoon unblocked						
vC, conflicting volume	538	247	248			
vC1, stage 1 conf vol						
vC2, stage 2 conf vol						
vCu, unblocked vol	538	247	248			
tC, single (s)	6.4	6.2	4.1			
tC, 2 stage (s)						
tF (s)	3.5	3.3	2.2			
p0 queue free %	100	100	100			
cM capacity (veh/h)	504	792	1318			

Direction, Lane #	EB 1	NB 1	SB 1
Volume Total	2	290	248
Volume Left	1	1	0
Volume Right	1	0	2
cSH	616	1318	1700
Volume to Capacity	0.00	0.00	0.15
Queue Length 95th (ft)	0	0	0
Control Delay (s)	10.9	0.0	0.0
Lane LOS	B	A	
Approach Delay (s)	10.9	0.0	0.0
Approach LOS	B		

Intersection Summary			
Average Delay	0.1		
Intersection Capacity Utilization	24.8%	ICU Level of Service	A
Analysis Period (min)	15		

Movement	EBL	EBR	NBL	NBT	SBT	SBR
Lane Configurations						
Volume (veh/h)	3	0	0	271	229	1
Sign Control	Stop			Free	Free	
Grade	0%			0%	0%	
Peak Hour Factor	0.92	0.92	0.92	0.92	0.92	0.92
Hourly flow rate (vph)	3	0	0	295	249	1
Pedestrians						
Lane Width (ft)						
Walking Speed (ft/s)						
Percent Blockage						
Right turn flare (veh)						
Median type				None	None	
Median storage veh)						
Upstream signal (ft)						
pX, platoon unblocked						
vC, conflicting volume	544	249	250			
vC1, stage 1 conf vol						
vC2, stage 2 conf vol						
vCu, unblocked vol	544	249	250			
tC, single (s)	6.4	6.2	4.1			
tC, 2 stage (s)						
tF (s)	3.5	3.3	2.2			
p0 queue free %	99	100	100			
cM capacity (veh/h)	500	789	1316			

Direction, Lane #	EB 1	NB 1	SB 1
Volume Total	3	295	250
Volume Left	3	0	0
Volume Right	0	0	1
cSH	500	1316	1700
Volume to Capacity	0.01	0.00	0.15
Queue Length 95th (ft)	0	0	0
Control Delay (s)	12.2	0.0	0.0
Lane LOS	B		
Approach Delay (s)	12.2	0.0	0.0
Approach LOS	B		

Intersection Summary			
Average Delay	0.1		
Intersection Capacity Utilization	24.3%	ICU Level of Service	A
Analysis Period (min)	15		

Movement	EBL	EBR	NBL	NBT	SBT	SBR
Lane Configurations						
Volume (veh/h)	9	18	29	237	191	2
Sign Control	Stop			Free	Free	
Grade	0%			0%	0%	
Peak Hour Factor	0.92	0.92	0.92	0.92	0.92	0.92
Hourly flow rate (vph)	10	20	32	258	208	2
Pedestrians						
Lane Width (ft)						
Walking Speed (ft/s)						
Percent Blockage						
Right turn flare (veh)						
Median type				None	None	
Median storage veh)						
Upstream signal (ft)						
pX, platoon unblocked						
vC, conflicting volume	529	209	210			
vC1, stage 1 conf vol						
vC2, stage 2 conf vol						
vCu, unblocked vol	529	209	210			
tC, single (s)	6.4	6.2	4.1			
tC, 2 stage (s)						
tF (s)	3.5	3.3	2.2			
p0 queue free %	98	98	98			
cM capacity (veh/h)	498	832	1361			

Direction, Lane #	EB 1	NB 1	SB 1
Volume Total	29	289	210
Volume Left	10	32	0
Volume Right	20	0	2
cSH	680	1361	1700
Volume to Capacity	0.04	0.02	0.12
Queue Length 95th (ft)	3	2	0
Control Delay (s)	10.5	1.0	0.0
Lane LOS	B	A	
Approach Delay (s)	10.5	1.0	0.0
Approach LOS	B		

Intersection Summary			
Average Delay	1.1		
Intersection Capacity Utilization	37.6%	ICU Level of Service	A
Analysis Period (min)	15		

Movement	EBL	EBR	NBL	NBT	SBT	SBR
Lane Configurations						
Volume (veh/h)	27	29	38	184	127	32
Sign Control	Stop			Free	Free	
Grade	0%			0%	0%	
Peak Hour Factor	0.92	0.92	0.92	0.92	0.92	0.92
Hourly flow rate (vph)	29	32	41	200	138	35
Pedestrians						
Lane Width (ft)						
Walking Speed (ft/s)						
Percent Blockage						
Right turn flare (veh)						
Median type				None	None	
Median storage veh)						
Upstream signal (ft)						
pX, platoon unblocked						
vC, conflicting volume	438	155	173			
vC1, stage 1 conf vol						
vC2, stage 2 conf vol						
vCu, unblocked vol	438	155	173			
tC, single (s)	6.4	6.2	4.1			
tC, 2 stage (s)						
tF (s)	3.5	3.3	2.2			
p0 queue free %	95	96	97			
cM capacity (veh/h)	559	890	1404			

Direction, Lane #	EB 1	NB 1	SB 1
Volume Total	61	241	173
Volume Left	29	41	0
Volume Right	32	0	35
cSH	692	1404	1700
Volume to Capacity	0.09	0.03	0.10
Queue Length 95th (ft)	7	2	0
Control Delay (s)	10.7	1.5	0.0
Lane LOS	B	A	
Approach Delay (s)	10.7	1.5	0.0
Approach LOS	B		

Intersection Summary			
Average Delay	2.1		
Intersection Capacity Utilization	33.7%	ICU Level of Service	A
Analysis Period (min)	15		

Movement	EBL	EBT	EBR	WBL	WBT	WBR	NBL	NBT	NBR	SBL	SBT	SBR
Lane Configurations												
Sign Control		Stop			Stop			Stop			Stop	
Volume (vph)	3	103	65	39	142	1	30	183	23	2	1	4
Peak Hour Factor	0.92	0.92	0.92	0.92	0.92	0.92	0.92	0.92	0.92	0.92	0.92	0.92
Hourly flow rate (vph)	3	112	71	42	154	1	33	199	25	2	1	4

Direction, Lane #	EB 1	WB 1	NB 1	SB 1
Volume Total (vph)	186	198	257	8
Volume Left (vph)	3	42	33	2
Volume Right (vph)	71	1	25	4
Hadj (s)	-0.19	0.07	0.00	-0.25
Departure Headway (s)	4.6	4.9	4.8	5.0
Degree Utilization, x	0.24	0.27	0.35	0.01
Capacity (veh/h)	721	692	701	639
Control Delay (s)	9.1	9.7	10.4	8.0
Approach Delay (s)	9.1	9.7	10.4	8.0
Approach LOS	A	A	B	A

Intersection Summary			
Delay	9.8		
HCM Level of Service	A		
Intersection Capacity Utilization	43.3%	ICU Level of Service	A
Analysis Period (min)	15		

HCM Unsignalized Intersection Capacity Analysis
1: SW 97th Ave. & SW 174th St.

2/18/2015

Movement	EBL	EBT	EBR	WBL	WBT	WBR	NBL	NBT	NBR	SBL	SBT	SBR
Lane Configurations												
Sign Control		Stop			Stop			Stop			Stop	
Volume (vph)	4	135	26	31	100	0	21	14	11	23	106	1
Peak Hour Factor	0.84	0.84	0.84	0.84	0.84	0.84	0.84	0.84	0.84	0.84	0.84	0.84
Hourly flow rate (vph)	5	161	31	37	119	0	25	17	13	27	126	1

Direction, Lane #	EB 1	WB 1	NB 1	SB 1
Volume Total (vph)	196	156	55	155
Volume Left (vph)	5	37	25	27
Volume Right (vph)	31	0	13	1
Hadj (s)	-0.06	0.08	-0.02	0.06
Departure Headway (s)	4.6	4.8	4.9	4.9
Degree Utilization, x	0.25	0.21	0.08	0.21
Capacity (veh/h)	740	712	662	683
Control Delay (s)	9.1	9.0	8.4	9.2
Approach Delay (s)	9.1	9.0	8.4	9.2
Approach LOS	A	A	A	A

Intersection Summary			
Delay	9.0		
HCM Level of Service	A		
Intersection Capacity Utilization	33.1%	ICU Level of Service	A
Analysis Period (min)	15		

Lane Group	EBL	NBT	SBT	NET
Lane Group Flow (vph)	89	382	136	4104
v/c Ratio	1.35	1.14	0.44	1.16
Control Delay	284.1	144.1	67.6	103.1
Queue Delay	0.0	0.0	0.0	0.0
Total Delay	284.1	144.1	67.6	103.1
Queue Length 50th (ft)	~129	~440	137	~1976
Queue Length 95th (ft)	#232	#587	196	#1765
Internal Link Dist (ft)	257	1041	665	1300
Turn Bay Length (ft)				
Base Capacity (vph)	66	334	310	3530
Starvation Cap Reductn	0	0	0	0
Spillback Cap Reductn	0	0	0	0
Storage Cap Reductn	0	0	0	0
Reduced v/c Ratio	1.35	1.14	0.44	1.16

Intersection Summary

~ Volume exceeds capacity, queue is theoretically infinite.
Queue shown is maximum after two cycles.

95th percentile volume exceeds capacity, queue may be longer.
Queue shown is maximum after two cycles.

Movement	EBL	EBR	NBL	NBT	NBR	SBL	SBT	NEL2	NEL	NET	NER
Lane Configurations											
Volume (vph)	1	74	3	11	307	3	111	1	2	3438	7
Ideal Flow (vphpl)	1900	1900	1900	1900	1900	1900	1900	1900	1900	1900	1900
Total Lost time (s)	5.0			5.0			5.0			5.0	
Lane Util. Factor	1.00			1.00			1.00			0.91	
Frt	0.87			0.87			1.00			1.00	
Flt Protected	1.00			1.00			1.00			1.00	
Satd. Flow (prot)	1613			1622			1860			5084	
Flt Permitted	1.00			1.00			0.94			1.00	
Satd. Flow (perm)	1613			1618			1757			5084	
Peak-hour factor, PHF	0.84	0.84	0.84	0.84	0.84	0.84	0.84	0.84	0.84	0.84	0.84
Adj. Flow (vph)	1	88	4	13	365	4	132	1	2	4093	8
RTOR Reduction (vph)	0	0	0	49	0	0	0	0	0	0	0
Lane Group Flow (vph)	89	0	0	333	0	0	136	0	0	4104	0
Turn Type	NA		Perm	NA		Perm	NA	Perm	Perm	NA	
Protected Phases	3			4			8			6	
Permitted Phases			4			8		6	6		
Actuated Green, G (s)	7.0			30.0			30.0			118.0	
Effective Green, g (s)	7.0			30.0			30.0			118.0	
Actuated g/C Ratio	0.04			0.18			0.18			0.69	
Clearance Time (s)	5.0			5.0			5.0			5.0	
Vehicle Extension (s)	3.0			3.0			3.0			3.0	
Lane Grp Cap (vph)	66			286			310			3529	
v/s Ratio Prot	c0.06										
v/s Ratio Perm				c0.21			0.08			0.81	
v/c Ratio	1.35			1.17			0.44			1.16	
Uniform Delay, d1	81.5			70.0			62.5			26.0	
Progression Factor	1.00			1.00			1.00			1.00	
Incremental Delay, d2	229.1			105.8			4.5			76.8	
Delay (s)	310.6			175.8			66.9			102.8	
Level of Service	F			F			E			F	
Approach Delay (s)	310.6			175.8			66.9			102.8	
Approach LOS	F			F			E			F	

Intersection Summary			
HCM Average Control Delay	111.6	HCM Level of Service	F
HCM Volume to Capacity ratio	1.17		
Actuated Cycle Length (s)	170.0	Sum of lost time (s)	15.0
Intersection Capacity Utilization	106.1%	ICU Level of Service	G
Analysis Period (min)	15		
c Critical Lane Group			

Movement	EBL	EBR	NBL	NBT	SBT	SBR
Lane Configurations						
Volume (veh/h)	41	34	36	339	97	43
Sign Control	Stop			Free	Free	
Grade	0%			0%	0%	
Peak Hour Factor	0.90	0.90	0.90	0.90	0.90	0.90
Hourly flow rate (vph)	46	38	40	377	108	48
Pedestrians						
Lane Width (ft)						
Walking Speed (ft/s)						
Percent Blockage						
Right turn flare (veh)						
Median type				None	None	
Median storage veh)						
Upstream signal (ft)					1121	
pX, platoon unblocked						
vC, conflicting volume	588	132	156			
vC1, stage 1 conf vol						
vC2, stage 2 conf vol						
vCu, unblocked vol	588	132	156			
tC, single (s)	6.4	6.2	4.1			
tC, 2 stage (s)						
tF (s)	3.5	3.3	2.2			
p0 queue free %	90	96	97			
cM capacity (veh/h)	458	918	1425			

Direction, Lane #	EB 1	NB 1	SB 1
Volume Total	83	417	156
Volume Left	46	40	0
Volume Right	38	0	48
cSH	593	1425	1700
Volume to Capacity	0.14	0.03	0.09
Queue Length 95th (ft)	12	2	0
Control Delay (s)	12.1	1.0	0.0
Lane LOS	B	A	
Approach Delay (s)	12.1	1.0	0.0
Approach LOS	B		

Intersection Summary			
Average Delay	2.2		
Intersection Capacity Utilization	41.9%	ICU Level of Service	A
Analysis Period (min)	15		

Movement	WBL	WBR	NBT	NBR	SBL	SBT
Lane Configurations						
Volume (veh/h)	64	48	328	35	23	87
Sign Control	Stop		Free			Free
Grade	0%		0%			0%
Peak Hour Factor	0.89	0.89	0.89	0.89	0.89	0.89
Hourly flow rate (vph)	72	54	369	39	26	98
Pedestrians						
Lane Width (ft)						
Walking Speed (ft/s)						
Percent Blockage						
Right turn flare (veh)						
Median type			None			None
Median storage veh)						
Upstream signal (ft)						
pX, platoon unblocked						
vC, conflicting volume	538	388			408	
vC1, stage 1 conf vol						
vC2, stage 2 conf vol						
vCu, unblocked vol	538	388			408	
tC, single (s)	6.4	6.2			4.1	
tC, 2 stage (s)						
tF (s)	3.5	3.3			2.2	
p0 queue free %	85	92			98	
cM capacity (veh/h)	493	660			1151	

Direction, Lane #	WB 1	NB 1	SB 1
Volume Total	126	408	124
Volume Left	72	0	26
Volume Right	54	39	0
cSH	553	1700	1151
Volume to Capacity	0.23	0.24	0.02
Queue Length 95th (ft)	22	0	2
Control Delay (s)	13.4	0.0	1.9
Lane LOS	B		A
Approach Delay (s)	13.4	0.0	1.9
Approach LOS	B		

Intersection Summary			
Average Delay	2.9		
Intersection Capacity Utilization	37.6%	ICU Level of Service	A
Analysis Period (min)	15		

Movement	EBL	EBR	NBL	NBT	SBT	SBR
Lane Configurations						
Volume (veh/h)	22	25	17	365	110	40
Sign Control	Stop			Free	Free	
Grade	0%			0%	0%	
Peak Hour Factor	0.95	0.95	0.95	0.95	0.95	0.95
Hourly flow rate (vph)	23	26	18	384	116	42
Pedestrians						
Lane Width (ft)						
Walking Speed (ft/s)						
Percent Blockage						
Right turn flare (veh)						
Median type				None	None	
Median storage veh)						
Upstream signal (ft)				1230		
pX, platoon unblocked						
vC, conflicting volume	557	137	158			
vC1, stage 1 conf vol						
vC2, stage 2 conf vol						
vCu, unblocked vol	557	137	158			
tC, single (s)	6.4	6.2	4.1			
tC, 2 stage (s)						
tF (s)	3.5	3.3	2.2			
p0 queue free %	95	97	99			
cM capacity (veh/h)	485	912	1422			

Direction, Lane #	EB 1	NB 1	SB 1
Volume Total	49	402	158
Volume Left	23	18	0
Volume Right	26	0	42
cSH	646	1422	1700
Volume to Capacity	0.08	0.01	0.09
Queue Length 95th (ft)	6	1	0
Control Delay (s)	11.0	0.5	0.0
Lane LOS	B	A	
Approach Delay (s)	11.0	0.5	0.0
Approach LOS	B		

Intersection Summary			
Average Delay	1.2		
Intersection Capacity Utilization	41.7%	ICU Level of Service	A
Analysis Period (min)	15		

Movement	EBL	EBT	EBR	WBL	WBT	WBR	NBL	NBT	NBR	SBL	SBT	SBR
Lane Configurations												
Volume (veh/h)	41	11	15	42	22	16	16	328	12	4	94	33
Sign Control		Stop			Stop			Free			Free	
Grade		0%			0%			0%			0%	
Peak Hour Factor	0.93	0.93	0.93	0.93	0.93	0.93	0.93	0.93	0.93	0.93	0.93	0.93
Hourly flow rate (vph)	44	12	16	45	24	17	17	353	13	4	101	35
Pedestrians												
Lane Width (ft)												
Walking Speed (ft/s)												
Percent Blockage												
Right turn flare (veh)												
Median type								None			None	
Median storage veh)												
Upstream signal (ft)								904				
pX, platoon unblocked	0.92	0.92		0.92	0.92	0.92				0.92		
vC, conflicting volume	550	527	119	543	539	359	137			366		
vC1, stage 1 conf vol												
vC2, stage 2 conf vol												
vCu, unblocked vol	471	446	119	463	459	264	137			271		
tC, single (s)	7.1	6.5	6.2	7.1	6.5	6.2	4.1			4.1		
tC, 2 stage (s)												
tF (s)	3.5	4.0	3.3	3.5	4.0	3.3	2.2			2.2		
p0 queue free %	90	97	98	90	95	98	99			100		
cM capacity (veh/h)	430	461	933	447	453	715	1447			1193		

Direction, Lane #	EB 1	WB 1	NB 1	SB 1
Volume Total	72	86	383	141
Volume Left	44	45	17	4
Volume Right	16	17	13	35
cSH	495	485	1447	1193
Volume to Capacity	0.15	0.18	0.01	0.00
Queue Length 95th (ft)	13	16	1	0
Control Delay (s)	13.5	14.0	0.4	0.3
Lane LOS	B	B	A	A
Approach Delay (s)	13.5	14.0	0.4	0.3
Approach LOS	B	B		

Intersection Summary			
Average Delay	3.5		
Intersection Capacity Utilization	36.7%	ICU Level of Service	A
Analysis Period (min)	15		

Movement	EBL	EBT	EBR	WBL	WBT	WBR	NBL	NBT	NBR	SBL	SBT	SBR
Lane Configurations												
Volume (veh/h)	16	12	4	15	4	1	4	339	14	0	138	10
Sign Control		Stop			Stop			Free			Free	
Grade		0%			0%			0%			0%	
Peak Hour Factor	0.91	0.91	0.91	0.91	0.91	0.91	0.91	0.91	0.91	0.91	0.91	0.91
Hourly flow rate (vph)	18	13	4	16	4	1	4	373	15	0	152	11
Pedestrians												
Lane Width (ft)												
Walking Speed (ft/s)												
Percent Blockage												
Right turn flare (veh)												
Median type								None			None	
Median storage veh)												
Upstream signal (ft)								601				
pX, platoon unblocked	0.87	0.87		0.87	0.87	0.87				0.87		
vC, conflicting volume	549	554	157	557	552	380	163			388		
vC1, stage 1 conf vol												
vC2, stage 2 conf vol												
vCu, unblocked vol	410	415	157	418	412	215	163			224		
tC, single (s)	7.1	6.5	6.2	7.1	6.5	6.2	4.1			4.1		
tC, 2 stage (s)												
tF (s)	3.5	4.0	3.3	3.5	4.0	3.3	2.2			2.2		
p0 queue free %	96	97	100	96	99	100	100			100		
cM capacity (veh/h)	476	459	888	461	461	719	1416			1172		

Direction, Lane #	EB 1	WB 1	NB 1	SB 1
Volume Total	35	22	392	163
Volume Left	18	16	4	0
Volume Right	4	1	15	11
cSH	498	470	1416	1172
Volume to Capacity	0.07	0.05	0.00	0.00
Queue Length 95th (ft)	6	4	0	0
Control Delay (s)	12.8	13.0	0.1	0.0
Lane LOS	B	B	A	
Approach Delay (s)	12.8	13.0	0.1	0.0
Approach LOS	B	B		

Intersection Summary			
Average Delay	1.3		
Intersection Capacity Utilization	31.9%	ICU Level of Service	A
Analysis Period (min)	15		

Movement	EBL	EBT	EBR	WBL	WBT	WBR	NBL	NBT	NBR	SBL	SBT	SBR
Lane Configurations												
Volume (veh/h)	17	9	40	7	1	1	21	330	7	1	131	29
Sign Control		Stop			Stop			Free			Free	
Grade		0%			0%			0%			0%	
Peak Hour Factor	0.94	0.94	0.94	0.94	0.94	0.94	0.94	0.94	0.94	0.94	0.94	0.94
Hourly flow rate (vph)	18	10	43	7	1	1	22	351	7	1	139	31
Pedestrians												
Lane Width (ft)												
Walking Speed (ft/s)												
Percent Blockage												
Right turn flare (veh)												
Median type								None			None	
Median storage veh)												
Upstream signal (ft)								300				
pX, platoon unblocked	0.84	0.84		0.84	0.84	0.84				0.84		
vC, conflicting volume	558	560	155	604	572	355	170			359		
vC1, stage 1 conf vol												
vC2, stage 2 conf vol												
vCu, unblocked vol	373	376	155	428	390	130	170			134		
tC, single (s)	7.1	6.5	6.2	7.1	6.5	6.2	4.1			4.1		
tC, 2 stage (s)												
tF (s)	3.5	4.0	3.3	3.5	4.0	3.3	2.2			2.2		
p0 queue free %	96	98	95	98	100	100	98			100		
cM capacity (veh/h)	480	457	891	415	448	769	1407			1212		

Direction, Lane #	EB 1	WB 1	NB 1	SB 1
Volume Total	70	10	381	171
Volume Left	18	7	22	1
Volume Right	43	1	7	31
cSH	660	442	1407	1212
Volume to Capacity	0.11	0.02	0.02	0.00
Queue Length 95th (ft)	9	2	1	0
Control Delay (s)	11.1	13.3	0.6	0.1
Lane LOS	B	B	A	A
Approach Delay (s)	11.1	13.3	0.6	0.1
Approach LOS	B	B		

Intersection Summary			
Average Delay	1.8		
Intersection Capacity Utilization	41.4%	ICU Level of Service	A
Analysis Period (min)	15		

Lane Group	EBL	EBT	EBR	WBL	WBT	NBL	NBT	SBL	SBT
Lane Group Flow (vph)	83	477	117	152	613	243	632	22	144
v/c Ratio	0.17	0.79	0.23	0.36	0.49	0.47	0.75	0.06	0.21
Control Delay	15.3	43.3	8.7	17.2	29.0	26.0	34.7	21.0	31.0
Queue Delay	0.0	0.0	0.0	0.0	0.0	0.0	0.0	0.0	0.0
Total Delay	15.3	43.3	8.7	17.2	29.0	26.0	34.7	21.0	31.0
Queue Length 50th (ft)	31	281	4	59	191	123	158	10	38
Queue Length 95th (ft)	58	394	50	97	247	187	220	26	67
Internal Link Dist (ft)		1915			531		229		156
Turn Bay Length (ft)	130			95		155		130	
Base Capacity (vph)	470	687	566	417	1424	519	968	370	821
Starvation Cap Reductn	0	0	0	0	0	0	0	0	0
Spillback Cap Reductn	0	0	0	0	0	0	0	0	0
Storage Cap Reductn	0	0	0	0	0	0	0	0	0
Reduced v/c Ratio	0.18	0.69	0.21	0.36	0.43	0.47	0.65	0.06	0.18

Intersection Summary

Movement	EBL	EBT	EBR	WBL	WBT	WBR	NBL	NBT	NBR	SBL	SBT	SBR
Lane Configurations												
Volume (vph)	79	453	111	144	523	59	231	318	282	21	109	28
Ideal Flow (vphpl)	1900	1900	1900	1900	1900	1900	1900	1900	1900	1900	1900	1900
Total Lost time (s)	3.0	3.0	5.0	3.0	3.0		3.0	3.0		3.0	3.0	
Lane Util. Factor	1.00	1.00	1.00	1.00	0.95		1.00	0.95		1.00	0.95	
Frt	1.00	1.00	0.85	1.00	0.98		1.00	0.93		1.00	0.97	
Flt Protected	0.95	1.00	1.00	0.95	1.00		0.95	1.00		0.95	1.00	
Satd. Flow (prot)	1770	1863	1583	1770	3486		1770	3290		1770	3432	
Flt Permitted	0.35	1.00	1.00	0.33	1.00		0.66	1.00		0.32	1.00	
Satd. Flow (perm)	657	1863	1583	623	3486		1231	3290		599	3432	
Peak-hour factor, PHF	0.95	0.95	0.95	0.95	0.95	0.95	0.95	0.95	0.95	0.95	0.95	0.95
Adj. Flow (vph)	83	477	117	152	551	62	243	335	297	22	115	29
RTOR Reduction (vph)	0	0	81	0	7	0	0	138	0	0	20	0
Lane Group Flow (vph)	83	477	36	152	606	0	243	494	0	22	124	0
Turn Type	custom	NA	custom	custom	NA		custom	NA		custom	NA	
Protected Phases	1 2	2 4		1 3	3 4		5 6	6 8		5 7	7 8	
Permitted Phases	4		4	4			8			8		
Actuated Green, G (s)	44.0	32.3	28.1	42.0	36.3		34.2	19.6		28.7	20.1	
Effective Green, g (s)	44.0	32.3	28.1	42.0	36.3		34.2	19.6		28.7	20.1	
Actuated g/C Ratio	0.41	0.30	0.26	0.39	0.34		0.32	0.18		0.27	0.19	
Clearance Time (s)			5.0									
Vehicle Extension (s)			3.0									
Lane Grp Cap (vph)	431	557	411	390	1171		488	597		314	638	
v/s Ratio Prot	0.03	c0.26		c0.05	c0.17		c0.09	c0.15		0.01	c0.04	
v/s Ratio Perm	0.05		0.02	0.10			0.07			0.01		
v/c Ratio	0.19	0.86	0.09	0.39	0.52		0.50	0.83		0.07	0.20	
Uniform Delay, d1	20.0	35.7	30.3	22.6	28.9		29.3	42.6		29.6	37.2	
Progression Factor	1.00	1.00	1.00	1.00	1.00		1.00	1.00		1.00	1.00	
Incremental Delay, d2	0.2	12.3	0.1	0.6	0.4		0.8	9.2		0.1	0.2	
Delay (s)	20.3	48.0	30.4	23.2	29.2		30.1	51.9		29.7	37.3	
Level of Service	C	D	C	C	C		C	D		C	D	
Approach Delay (s)		41.6			28.0			45.8			36.3	
Approach LOS		D			C			D			D	

Intersection Summary			
HCM Average Control Delay	38.5	HCM Level of Service	D
HCM Volume to Capacity ratio	0.68		
Actuated Cycle Length (s)	108.1	Sum of lost time (s)	24.0
Intersection Capacity Utilization	67.2%	ICU Level of Service	C
Analysis Period (min)	15		
c Critical Lane Group			

Movement	EBL	EBT	WBT	WBR	SBL	SBR
Lane Configurations						
Volume (veh/h)	319	554	695	39	30	76
Sign Control		Free	Free		Stop	
Grade		0%	0%		0%	
Peak Hour Factor	0.88	0.88	0.88	0.88	0.88	0.88
Hourly flow rate (vph)	362	630	790	44	34	86
Pedestrians						
Lane Width (ft)						
Walking Speed (ft/s)						
Percent Blockage						
Right turn flare (veh)						
Median type		None	None			
Median storage veh)						
Upstream signal (ft)		611				
pX, platoon unblocked					0.84	
vC, conflicting volume	834				2166	812
vC1, stage 1 conf vol						
vC2, stage 2 conf vol						
vCu, unblocked vol	834				2292	812
tC, single (s)	4.1				6.4	6.2
tC, 2 stage (s)						
tF (s)	2.2				3.5	3.3
p0 queue free %	55				0	77
cM capacity (veh/h)	799				20	379

Direction, Lane #	EB 1	EB 2	WB 1	SB 1
Volume Total	362	630	834	120
Volume Left	362	0	0	34
Volume Right	0	0	44	86
cSH	799	1700	1700	62
Volume to Capacity	0.45	0.37	0.49	1.95
Queue Length 95th (ft)	60	0	0	283
Control Delay (s)	13.2	0.0	0.0	588.7
Lane LOS	B			F
Approach Delay (s)	4.8		0.0	588.7
Approach LOS				F

Intersection Summary			
Average Delay	38.9		
Intersection Capacity Utilization	73.0%	ICU Level of Service	C
Analysis Period (min)	15		

Lane Group	EBL	EBT	WBL	WBT	NBL	NBT	SBL	SBT
Lane Group Flow (vph)	499	661	198	695	68	2413	133	1856
v/c Ratio	1.09	0.72	0.70	1.16	0.70	1.11	1.37	0.86
Control Delay	125.2	62.7	79.9	149.7	60.4	100.8	245.2	48.6
Queue Delay	0.0	0.0	0.0	0.0	0.0	0.0	0.0	0.0
Total Delay	125.2	62.7	79.9	149.7	60.4	100.8	245.2	48.6
Queue Length 50th (ft)	~623	356	230	~503	40	~1120	~143	677
Queue Length 95th (ft)	#766	395	310	#576	#87	#1057	#264	664
Internal Link Dist (ft)		364		1915		469		768
Turn Bay Length (ft)			286		160		130	
Base Capacity (vph)	458	915	284	597	97	2177	97	2157
Starvation Cap Reductn	0	0	0	0	0	0	0	0
Spillback Cap Reductn	0	0	0	0	0	0	0	0
Storage Cap Reductn	0	0	0	0	0	0	0	0
Reduced v/c Ratio	1.09	0.72	0.70	1.16	0.70	1.11	1.37	0.86

Intersection Summary

~ Volume exceeds capacity, queue is theoretically infinite.
Queue shown is maximum after two cycles.

95th percentile volume exceeds capacity, queue may be longer.
Queue shown is maximum after two cycles.

Movement	EBL	EBT	EBR	WBL	WBT	WBR	NBL	NBT	NBR	SBL	SBT	SBR
Lane Configurations												
Volume (vph)	419	551	4	185	559	7	57	1972	55	112	1396	163
Ideal Flow (vphpl)	1900	1900	1900	1900	1900	1900	1900	1900	1900	1900	1900	1900
Total Lost time (s)	5.0	5.0		5.0	5.0		3.0	5.0		3.0	5.0	
Lane Util. Factor	1.00	0.95		0.91	0.91		1.00	0.91		1.00	0.91	
Frt	1.00	1.00		1.00	1.00		1.00	1.00		1.00	0.98	
Flt Protected	0.95	1.00		0.95	1.00		0.95	1.00		0.95	1.00	
Satd. Flow (prot)	1770	3535		1610	3379		1770	5065		1770	5006	
Flt Permitted	0.95	1.00		0.95	1.00		0.05	1.00		0.05	1.00	
Satd. Flow (perm)	1770	3535		1610	3379		102	5065		102	5006	
Peak-hour factor, PHF	0.84	0.84	0.84	0.84	0.84	0.84	0.84	0.84	0.84	0.84	0.84	0.84
Adj. Flow (vph)	499	656	5	220	665	8	68	2348	65	133	1662	194
RTOR Reduction (vph)	0	0	0	0	1	0	0	2	0	0	9	0
Lane Group Flow (vph)	499	661	0	198	694	0	68	2411	0	133	1847	0
Turn Type	Split	NA		Split	NA		pm+pt	NA		pm+pt	NA	
Protected Phases	4	4		8	8		5	2		1	6	
Permitted Phases							2			6		
Actuated Green, G (s)	44.0	44.0		30.0	30.0		78.0	73.0		78.0	73.0	
Effective Green, g (s)	44.0	44.0		30.0	30.0		78.0	73.0		78.0	73.0	
Actuated g/C Ratio	0.26	0.26		0.18	0.18		0.46	0.43		0.46	0.43	
Clearance Time (s)	5.0	5.0		5.0	5.0		3.0	5.0		3.0	5.0	
Vehicle Extension (s)	3.0	3.0		3.0	3.0		3.0	3.0		3.0	3.0	
Lane Grp Cap (vph)	458	915		284	596		96	2175		96	2150	
v/s Ratio Prot	c0.28	0.19		0.12	c0.21		0.02	0.48		c0.04	0.37	
v/s Ratio Perm							0.30			c0.60		
v/c Ratio	1.09	0.72		0.70	1.16		0.71	1.11		1.39	0.86	
Uniform Delay, d1	63.0	57.4		65.7	70.0		36.2	48.5		43.2	43.9	
Progression Factor	1.00	1.00		1.00	1.00		1.00	1.00		1.00	1.00	
Incremental Delay, d2	68.4	2.8		7.3	91.4		21.2	56.2		225.3	3.7	
Delay (s)	131.4	60.3		73.0	161.4		57.4	104.7		268.5	47.5	
Level of Service	F	E		E	F		E	F		F	D	
Approach Delay (s)		90.9			141.8			103.4			62.3	
Approach LOS		F			F			F			E	

Intersection Summary			
HCM Average Control Delay	93.9	HCM Level of Service	F
HCM Volume to Capacity ratio	1.24		
Actuated Cycle Length (s)	170.0	Sum of lost time (s)	16.0
Intersection Capacity Utilization	100.1%	ICU Level of Service	G
Analysis Period (min)	15		
c Critical Lane Group			

Movement	EBL	EBT	EBR	WBL	WBT	WBR	NBL	NBT	NBR	SBL	SBT	SBR
Lane Configurations												
Volume (vph)	419	551	4	185	559	7	57	1972	55	112	1396	163
Movement Number	7	4	14	3	8	18	5	2	12	1	6	16
Initial Queue, veh	0	0	0	0	0	0	0	0	0	0	0	0
Ped-Bike Adj. Factor (A_pbT)	1.00		1.00	1.00		1.00	1.00		1.00	1.00		1.00
Parking, Bus Adj. Factors	1.00	1.00	1.00	1.00	1.00	1.00	1.00	1.00	1.00	1.00	1.00	1.00
Adj. Sat. Flow Rate, veh/h/ln	1863	1863	1863	1863	1863	1863	1863	1863	1863	1863	1863	1863
Lanes	1	2	0	1	2	0	1	3	0	1	3	0
Lane Assignment												
Capacity, veh/h	459	956	7	313	648	8	121	2184	61	96	1984	231
Proportion Arriving On Green	0.26	0.26	0.26	0.18	0.18	0.18	0.03	0.43	0.43	0.03	0.43	0.43
Movement Delay, s/veh	130.3	60.8	60.8	72.8	126.7	127.0	43.7	94.3	104.0	269.4	47.6	51.6
Movement LOS	F	E	E	E	F	F	D	F	F	F	D	D
Approach Volume, veh/h		1160			894			2481			1989	
Approach Delay, s/veh		90.7			113.5			96.2			63.8	
Approach LOS		F			F			F			E	

Timer:	1	2	3	4	5	6	7	8
Assigned Phase	1	2	8	4	5	6		
Case No	1.1	4.0	10.0	10.0	1.1	4.0		
Phase Duration (G+Y+Rc), s	8.00	78.00	35.00	49.00	8.00	78.00		
Change Period (Y+Rc), s	3.00	5.00	5.00	5.00	3.00	5.00		
Max. Allowable Headway (MAH), s	4.00	3.93	3.93	3.95	4.00	3.93		
Maximum Green Setting (Gmax), s	5.00	73.00	30.00	44.00	5.00	73.00		
Max. Queue Clearance Time (g_c+I1), s	7.00	75.00	32.00	46.00	5.66	56.73		
Green Extension Time (g_e), s	0.00	0.00	0.00	0.00	0.00	14.81		
Probability of Phase Call (p_c)	0.998	1.000	1.000	1.000	0.959	1.000		
Probability of Max Out (p_x)	1.000	1.000	1.000	1.000	1.000	0.919		

Left-Turn Movement Data					
Assigned Movement	1		3	7	5
Mvmt. Sat Flow, veh/h	1774.04		1774.04	1774.04	1774.04

Through Movement Data					
Assigned Movement		2	8	4	6
Mvmt. Sat Flow, veh/h		5086.67	3671.41	3693.95	4620.05

Right-Turn Movement Data					
Assigned Movement		12	18	14	16
Mvmt. Sat Flow, veh/h		141.33	45.97	26.81	537.96

Left Lane Group Data								
Assigned Movement	1	0	3	7	5	0	0	0
Lane Assignment	L (Pr/Pm)		L		LL (Pr/Pm)			
Lanes in Group	1	0	1	1	1	0	0	0
Group Volume (v), veh/h	133.3	0.0	220.2	498.8	67.9	0.0	0.0	0.0
Group Sat. Flow (s), veh/h/ln	1774.0	0.0	1774.0	1774.0	1774.0	0.0	0.0	0.0
Queue Serve Time (g_s), s	5.0	0.0	19.8	44.0	3.7	0.0	0.0	0.0
Cycle Queue Clear Time (g_c), s	5.0	0.0	19.8	44.0	3.7	0.0	0.0	0.0

Perm LT Sat Flow Rate (s_l), veh/h/ln	142.6	0.0	1774.0	1774.0	246.9	0.0	0.0	0.0
Shared LT Sat Flow (s_sh), veh/h/ln	0.0	0.0	0.0	0.0	0.0	0.0	0.0	0.0
Perm LT Eff. Green (g_p), s	73.0	0.0	0.0	0.0	73.0	0.0	0.0	0.0
Perm LT Serve Time (g_u), s	2.0	0.0	0.0	0.0	18.3	0.0	0.0	0.0
Perm LT Que Serve Time (g_ps), s	2.0	0.0	0.0	0.0	18.3	0.0	0.0	0.0
Time to First Blk (g_f), s	0.0	0.0	0.0	0.0	0.0	0.0	0.0	0.0
Serve Time pre Blk (g_fs), s	0.0	0.0	0.0	0.0	0.0	0.0	0.0	0.0
Proportion LT Inside Lane (P_L)	1.000	0.000	1.000	1.000	1.000	0.000	0.000	0.000
Lane Group Capacity (c), veh/h	96.2	0.0	313.1	459.2	121.1	0.0	0.0	0.0
Volume-to-Capacity Ratio (X)	1.386	0.000	0.703	1.086	0.561	0.000	0.000	0.000
Available Capacity (c_a), veh/h	96.2	0.0	313.1	459.2	121.1	0.0	0.0	0.0
Upstream Filter Factor (I)	1.000	0.000	1.000	1.000	1.000	0.000	0.000	0.000
Uniform Delay (d1), s/veh	44.0	0.0	65.8	63.0	38.0	0.0	0.0	0.0
Incremental Delay (d2), s/veh	225.4	0.0	6.9	67.3	5.7	0.0	0.0	0.0
Initial Queue Delay (d3), s/veh	0.0	0.0	0.0	0.0	0.0	0.0	0.0	0.0
Control Delay (d), s/veh	269.4	0.0	72.8	130.3	43.7	0.0	0.0	0.0
First-Term Queue (Q1), veh/ln	2.3	0.0	9.1	19.9	1.6	0.0	0.0	0.0
Second-Term Queue (Q2), veh/ln	6.0	0.0	0.6	8.6	0.2	0.0	0.0	0.0
Third-Term Queue (Q3), veh/ln	0.0	0.0	0.0	0.0	0.0	0.0	0.0	0.0
Percentile bk-of-que factor (f_B%)	1.000	0.000	1.000	1.000	1.000	0.000	0.000	0.000
Percentile Back of Queue (Q%), veh/ln	8.3	0.0	9.7	28.5	1.8	0.0	0.0	0.0
Percentile Storage Ratio (RQ%)	1.63	0.00	0.86	2.10	0.28	0.00	0.00	0.00
Initial Queue (Qb), veh	0.0	0.0	0.0	0.0	0.0	0.0	0.0	0.0
Final (Residual) Queue (Qe), veh	9.3	0.0	0.0	9.9	0.0	0.0	0.0	0.0
Saturated Delay (ds), s/veh	0.0	0.0	0.0	0.0	0.0	0.0	0.0	0.0
Saturated Queue (Qs), veh	0.0	0.0	0.0	0.0	0.0	0.0	0.0	0.0
Saturated Capacity (cs), veh/h	0.0	0.0	0.0	0.0	0.0	0.0	0.0	0.0
Initial Queue Clear Time (tc), h	0.3	0.0	0.0	0.3	0.0	0.0	0.0	0.0

Middle Lane Group Data								
Assigned Movement	0	2	8	4	0	6	0	0
Lane Assignment		T	T	T		T		
Lanes in Group	0	2	1	1	0	2	0	0
Group Volume (v), veh/h	0.0	1561.7	337.6	330.7	0.0	1218.3	0.0	0.0
Group Sat. Flow (s), veh/h/ln	0.0	1695.1	1862.7	1862.7	0.0	1695.1	0.0	0.0
Queue Serve Time (g_s), s	0.0	73.0	30.0	27.2	0.0	54.4	0.0	0.0
Cycle Queue Clear Time (g_c), s	0.0	73.0	30.0	27.2	0.0	54.4	0.0	0.0
Lane Group Capacity (c), veh/h	0.0	1455.8	328.7	482.1	0.0	1455.8	0.0	0.0
Volume-to-Capacity Ratio (X)	0.000	1.073	1.027	0.686	0.000	0.837	0.000	0.000
Available Capacity (c_a), veh/h	0.0	1455.8	328.7	482.1	0.0	1455.8	0.0	0.0
Upstream Filter Factor (I)	0.000	1.000	1.000	1.000	0.000	1.000	0.000	0.000
Uniform Delay (d1), s/veh	0.0	48.5	70.0	56.8	0.0	43.2	0.0	0.0
Incremental Delay (d2), s/veh	0.0	45.8	56.7	4.0	0.0	4.5	0.0	0.0
Initial Queue Delay (d3), s/veh	0.0	0.0	0.0	0.0	0.0	0.0	0.0	0.0
Control Delay (d), s/veh	0.0	94.3	126.7	60.8	0.0	47.6	0.0	0.0
First-Term Queue (Q1), veh/ln	0.0	30.7	14.4	12.9	0.0	22.9	0.0	0.0
Second-Term Queue (Q2), veh/ln	0.0	9.3	5.2	0.5	0.0	0.9	0.0	0.0
Third-Term Queue (Q3), veh/ln	0.0	0.0	0.0	0.0	0.0	0.0	0.0	0.0
Percentile bk-of-que factor (f_B%)	0.000	1.000	1.000	1.000	0.000	1.000	0.000	0.000
Percentile Back of Queue (Q%), veh/ln	0.0	39.9	19.6	13.5	0.0	23.8	0.0	0.0
Percentile Storage Ratio (RQ%)	0.00	2.22	0.27	0.99	0.00	0.82	0.00	0.00

Initial Queue (Qb), veh	0.0	0.0	0.0	0.0	0.0	0.0	0.0	0.0
Final (Residual) Queue (Qe), veh	0.0	26.5	2.2	0.0	0.0	0.0	0.0	0.0
Saturated Delay (ds), s/veh	0.0	0.0	0.0	0.0	0.0	0.0	0.0	0.0
Saturated Queue (Qs), veh	0.0	0.0	0.0	0.0	0.0	0.0	0.0	0.0
Saturated Capacity (cs), veh/h	0.0	0.0	0.0	0.0	0.0	0.0	0.0	0.0
Initial Queue Clear Time (tc), h	0.0	0.3	0.3	0.0	0.0	0.0	0.0	0.0
Right Lane Group Data								
Assigned Movement	0	12	18	14	0	16	0	0
Lane Assignment		T+R	T+R	T+R		T+R		
Lanes in Group	0	1	1	1	0	1	0	0
Group Volume (v), veh/h	0.0	851.4	336.2	330.0	0.0	637.7	0.0	0.0
Group Sat. Flow (s), veh/h/ln	0.0	1837.8	1854.6	1858.0	0.0	1767.8	0.0	0.0
Queue Serve Time (g_s), s	0.0	73.0	30.0	27.2	0.0	54.7	0.0	0.0
Cycle Queue Clear Time (g_c), s	0.0	73.0	30.0	27.2	0.0	54.7	0.0	0.0
Prot RT Sat Flow Rate (s_R), veh/h/ln	0.0	0.0	0.0	0.0	0.0	0.0	0.0	0.0
Prot RT Eff. Green (g_R), s	0.0	0.0	0.0	0.0	0.0	0.0	0.0	0.0
Proportion RT Outside Lane (P_R)	0.000	0.077	0.025	0.014	0.000	0.304	0.000	0.000
Lane Group Capacity (c), veh/h	0.0	789.2	327.3	480.9	0.0	759.1	0.0	0.0
Volume-to-Capacity Ratio (X)	0.000	1.079	1.027	0.686	0.000	0.840	0.000	0.000
Available Capacity (c_a), veh/h	0.0	789.2	327.3	480.9	0.0	759.1	0.0	0.0
Upstream Filter Factor (I)	0.000	1.000	1.000	1.000	0.000	1.000	0.000	0.000
Uniform Delay (d1), s/veh	0.0	48.5	70.0	56.8	0.0	43.3	0.0	0.0
Incremental Delay (d2), s/veh	0.0	55.5	57.0	4.0	0.0	8.4	0.0	0.0
Initial Queue Delay (d3), s/veh	0.0	0.0	0.0	0.0	0.0	0.0	0.0	0.0
Control Delay (d), s/veh	0.0	104.0	127.0	60.8	0.0	51.6	0.0	0.0
First-Term Queue (Q1), veh/ln	0.0	33.3	14.3	12.9	0.0	24.0	0.0	0.0
Second-Term Queue (Q2), veh/ln	0.0	12.2	5.2	0.5	0.0	1.8	0.0	0.0
Third-Term Queue (Q3), veh/ln	0.0	0.0	0.0	0.0	0.0	0.0	0.0	0.0
Percentile bk-of-que factor (f_B%)	0.000	1.000	1.000	1.000	0.000	1.000	0.000	0.000
Percentile Back of Queue (Q%), veh/ln	0.0	45.4	19.5	13.4	0.0	25.8	0.0	0.0
Percentile Storage Ratio (RQ%)	0.00	2.53	0.27	0.99	0.00	0.89	0.00	0.00
Initial Queue (Qb), veh	0.0	0.0	0.0	0.0	0.0	0.0	0.0	0.0
Final (Residual) Queue (Qe), veh	0.0	15.6	2.2	0.0	0.0	0.0	0.0	0.0
Saturated Delay (ds), s/veh	0.0	0.0	0.0	0.0	0.0	0.0	0.0	0.0
Saturated Queue (Qs), veh	0.0	0.0	0.0	0.0	0.0	0.0	0.0	0.0
Saturated Capacity (cs), veh/h	0.0	0.0	0.0	0.0	0.0	0.0	0.0	0.0
Initial Queue Clear Time (tc), h	0.0	0.3	0.3	0.0	0.0	0.0	0.0	0.0
Intersection Summary								
HCM Average Control Delay		87.7						
HCM Level of Service		F						

Movement	EBL	EBT	EBR	WBL	WBT	WBR	NEL	NET	NER	SWL	SWT	SWR
Lane Configurations												
Volume (veh/h)	14	4	0	0	25	10	36	2628	30	0	0	0
Sign Control		Stop			Stop			Free			Free	
Grade		0%			0%			0%			0%	
Peak Hour Factor	0.96	0.96	0.96	0.96	0.96	0.96	0.96	0.96	0.96	0.96	0.96	0.96
Hourly flow rate (vph)	15	4	0	0	26	10	38	2738	31	0	0	0
Pedestrians												
Lane Width (ft)												
Walking Speed (ft/s)												
Percent Blockage												
Right turn flare (veh)												
Median type								None			None	
Median storage veh)												
Upstream signal (ft)												
pX, platoon unblocked												
vC, conflicting volume	1011	2844	0	2830	2828	928	0			2769		
vC1, stage 1 conf vol												
vC2, stage 2 conf vol												
vCu, unblocked vol	1011	2844	0	2830	2828	928	0			2769		
tC, single (s)	7.5	6.5	6.9	7.5	6.5	6.9	4.1			4.1		
tC, 2 stage (s)												
tF (s)	3.5	4.0	3.3	3.5	4.0	3.3	2.2			2.2		
p0 queue free %	0	75	100	100	0	96	98			100		
cM capacity (veh/h)	0	17	1084	6	17	270	1622			140		

Direction, Lane #	EB 1	WB 1	NE 1	NE 2	NE 3
Volume Total	19	36	722	1369	716
Volume Left	15	0	38	0	0
Volume Right	0	10	0	0	31
cSH	0	23	1622	1700	1700
Volume to Capacity	Err	1.58	0.02	0.81	0.42
Queue Length 95th (ft)	Err	116	2	0	0
Control Delay (s)	Err	646.8	0.6	0.0	0.0
Lane LOS	F	F	A		
Approach Delay (s)	Err	646.8	0.2		
Approach LOS	F	F			

Intersection Summary			
Average Delay	Err		
Intersection Capacity Utilization	66.5%	ICU Level of Service	C
Analysis Period (min)	15		

Movement	EBL	EBT	EBR	WBL	WBT	WBR	NEL	NET	NER	SWL	SWT	SWR
Lane Configurations												
Volume (veh/h)	2	11	0	0	46	12	6	2631	42	0	0	0
Sign Control		Stop			Stop			Free			Free	
Grade		0%			0%			0%			0%	
Peak Hour Factor	0.93	0.93	0.93	0.93	0.93	0.93	0.93	0.93	0.93	0.93	0.93	0.93
Hourly flow rate (vph)	2	12	0	0	49	13	6	2829	45	0	0	0
Pedestrians												
Lane Width (ft)												
Walking Speed (ft/s)												
Percent Blockage												
Right turn flare (veh)												
Median type								None			None	
Median storage veh)												
Upstream signal (ft)												
pX, platoon unblocked												
vC, conflicting volume	994	2887	0	2870	2865	966	0			2874		
vC1, stage 1 conf vol												
vC2, stage 2 conf vol												
vCu, unblocked vol	994	2887	0	2870	2865	966	0			2874		
tC, single (s)	7.5	6.5	6.9	7.5	6.5	6.9	4.1			4.1		
tC, 2 stage (s)												
tF (s)	3.5	4.0	3.3	3.5	4.0	3.3	2.2			2.2		
p0 queue free %	0	25	100	100	0	95	100			100		
cM capacity (veh/h)	0	16	1084	3	16	255	1622			127		

Direction, Lane #	EB 1	WB 1	NE 1	NE 2	NE 3
Volume Total	14	62	714	1415	752
Volume Left	2	0	6	0	0
Volume Right	0	13	0	0	45
cSH	0	20	1622	1700	1700
Volume to Capacity	Err	3.08	0.00	0.83	0.44
Queue Length 95th (ft)	Err	Err	0	0	0
Control Delay (s)	Err	Err	0.1	0.0	0.0
Lane LOS	F	F	A		
Approach Delay (s)	Err	Err	0.0		
Approach LOS	F	F			

Intersection Summary			
Average Delay	Err		
Intersection Capacity Utilization	61.9%	ICU Level of Service	B
Analysis Period (min)	15		

Movement	EBL	EBR	NBL	NBT	SBT	SBR
Lane Configurations						
Volume (veh/h)	2	0	5	323	87	2
Sign Control	Stop			Free	Free	
Grade	0%			0%	0%	
Peak Hour Factor	0.92	0.92	0.92	0.92	0.92	0.92
Hourly flow rate (vph)	2	0	5	351	95	2
Pedestrians						
Lane Width (ft)						
Walking Speed (ft/s)						
Percent Blockage						
Right turn flare (veh)						
Median type				None	None	
Median storage veh)						
Upstream signal (ft)						
pX, platoon unblocked						
vC, conflicting volume	458	96	97			
vC1, stage 1 conf vol						
vC2, stage 2 conf vol						
vCu, unblocked vol	458	96	97			
tC, single (s)	6.4	6.2	4.1			
tC, 2 stage (s)						
tF (s)	3.5	3.3	2.2			
p0 queue free %	100	100	100			
cM capacity (veh/h)	559	961	1497			

Direction, Lane #	EB 1	NB 1	SB 1
Volume Total	2	357	97
Volume Left	2	5	0
Volume Right	0	0	2
cSH	559	1497	1700
Volume to Capacity	0.00	0.00	0.06
Queue Length 95th (ft)	0	0	0
Control Delay (s)	11.5	0.1	0.0
Lane LOS	B	A	
Approach Delay (s)	11.5	0.1	0.0
Approach LOS	B		

Intersection Summary			
Average Delay	0.2		
Intersection Capacity Utilization	31.0%	ICU Level of Service	A
Analysis Period (min)	15		

Movement	EBL	EBR	NBL	NBT	SBT	SBR
Lane Configurations						
Volume (veh/h)	11	1	11	321	88	1
Sign Control	Stop			Free	Free	
Grade	0%			0%	0%	
Peak Hour Factor	0.92	0.92	0.92	0.92	0.92	0.92
Hourly flow rate (vph)	12	1	12	349	96	1
Pedestrians						
Lane Width (ft)						
Walking Speed (ft/s)						
Percent Blockage						
Right turn flare (veh)						
Median type				None	None	
Median storage veh)						
Upstream signal (ft)						
pX, platoon unblocked						
vC, conflicting volume	469	96	97			
vC1, stage 1 conf vol						
vC2, stage 2 conf vol						
vCu, unblocked vol	469	96	97			
tC, single (s)	6.4	6.2	4.1			
tC, 2 stage (s)						
tF (s)	3.5	3.3	2.2			
p0 queue free %	98	100	99			
cM capacity (veh/h)	548	960	1497			

Direction, Lane #	EB 1	NB 1	SB 1
Volume Total	13	361	97
Volume Left	12	12	0
Volume Right	1	0	1
cSH	569	1497	1700
Volume to Capacity	0.02	0.01	0.06
Queue Length 95th (ft)	2	1	0
Control Delay (s)	11.5	0.3	0.0
Lane LOS	B	A	
Approach Delay (s)	11.5	0.3	0.0
Approach LOS	B		

Intersection Summary			
Average Delay	0.6		
Intersection Capacity Utilization	34.2%	ICU Level of Service	A
Analysis Period (min)	15		

Movement	EBL	EBR	NBL	NBT	SBT	SBR
Lane Configurations						
Volume (veh/h)	28	11	9	317	79	5
Sign Control	Stop			Free	Free	
Grade	0%			0%	0%	
Peak Hour Factor	0.92	0.92	0.92	0.92	0.92	0.92
Hourly flow rate (vph)	30	12	10	345	86	5
Pedestrians	80					
Lane Width (ft)	12.0					
Walking Speed (ft/s)	4.0					
Percent Blockage	7					
Right turn flare (veh)						
Median type				None	None	
Median storage veh)						
Upstream signal (ft)						
pX, platoon unblocked						
vC, conflicting volume	533	169	171			
vC1, stage 1 conf vol						
vC2, stage 2 conf vol						
vCu, unblocked vol	533	169	171			
tC, single (s)	6.4	6.2	4.1			
tC, 2 stage (s)						
tF (s)	3.5	3.3	2.2			
p0 queue free %	94	99	99			
cM capacity (veh/h)	470	817	1312			

Direction, Lane #	EB 1	NB 1	SB 1
Volume Total	42	354	91
Volume Left	30	10	0
Volume Right	12	0	5
cSH	534	1312	1700
Volume to Capacity	0.08	0.01	0.05
Queue Length 95th (ft)	6	1	0
Control Delay (s)	12.3	0.3	0.0
Lane LOS	B	A	
Approach Delay (s)	12.3	0.3	0.0
Approach LOS	B		

Intersection Summary			
Average Delay	1.3		
Intersection Capacity Utilization	33.8%	ICU Level of Service	A
Analysis Period (min)	15		

Movement	EBL	EBR	NBL	NBT	SBT	SBR
Lane Configurations						
Volume (veh/h)	26	22	22	298	50	15
Sign Control	Stop			Free	Free	
Grade	0%			0%	0%	
Peak Hour Factor	0.92	0.92	0.92	0.92	0.92	0.92
Hourly flow rate (vph)	28	24	24	324	54	16
Pedestrians						
Lane Width (ft)						
Walking Speed (ft/s)						
Percent Blockage						
Right turn flare (veh)						
Median type				None	None	
Median storage veh)						
Upstream signal (ft)						
pX, platoon unblocked						
vC, conflicting volume	434	62	71			
vC1, stage 1 conf vol						
vC2, stage 2 conf vol						
vCu, unblocked vol	434	62	71			
tC, single (s)	6.4	6.2	4.1			
tC, 2 stage (s)						
tF (s)	3.5	3.3	2.2			
p0 queue free %	95	98	98			
cM capacity (veh/h)	570	1002	1530			

Direction, Lane #	EB 1	NB 1	SB 1
Volume Total	52	348	71
Volume Left	28	24	0
Volume Right	24	0	16
cSH	710	1530	1700
Volume to Capacity	0.07	0.02	0.04
Queue Length 95th (ft)	6	1	0
Control Delay (s)	10.5	0.6	0.0
Lane LOS	B	A	
Approach Delay (s)	10.5	0.6	0.0
Approach LOS	B		

Intersection Summary			
Average Delay	1.6		
Intersection Capacity Utilization	33.6%	ICU Level of Service	A
Analysis Period (min)	15		

Movement	EBL	EBT	EBR	WBL	WBT	WBR	NBL	NBT	NBR	SBL	SBT	SBR
Lane Configurations												
Sign Control		Stop			Stop			Stop			Stop	
Volume (vph)	4	116	49	34	102	1	21	246	18	1	1	1
Peak Hour Factor	0.92	0.92	0.92	0.92	0.92	0.92	0.92	0.92	0.92	0.92	0.92	0.92
Hourly flow rate (vph)	4	126	53	37	111	1	23	267	20	1	1	1

Direction, Lane #	EB 1	WB 1	NB 1	SB 1
Volume Total (vph)	184	149	310	3
Volume Left (vph)	4	37	23	1
Volume Right (vph)	53	1	20	1
Hadj (s)	-0.14	0.08	0.01	-0.10
Departure Headway (s)	4.8	5.0	4.7	5.1
Degree Utilization, x	0.24	0.21	0.41	0.00
Capacity (veh/h)	702	667	723	632
Control Delay (s)	9.3	9.3	11.0	8.1
Approach Delay (s)	9.3	9.3	11.0	8.1
Approach LOS	A	A	B	A

Intersection Summary			
Delay	10.1		
HCM Level of Service	B		
Intersection Capacity Utilization	42.4%	ICU Level of Service	A
Analysis Period (min)	15		

HCM Unsignalized Intersection Capacity Analysis
1: SW 97th Ave. & SW 174th St.

2/18/2015

Movement	EBL	EBT	EBR	WBL	WBT	WBR	NBL	NBT	NBR	SBL	SBT	SBR
Lane Configurations												
Sign Control		Stop			Stop			Stop			Stop	
Volume (vph)	3	127	33	33	109	2	24	8	13	28	112	4
Peak Hour Factor	0.84	0.84	0.84	0.84	0.84	0.84	0.84	0.84	0.84	0.84	0.84	0.84
Hourly flow rate (vph)	4	151	39	39	130	2	29	10	15	33	133	5

Direction, Lane #	EB 1	WB 1	NB 1	SB 1
Volume Total (vph)	194	171	54	171
Volume Left (vph)	4	39	29	33
Volume Right (vph)	39	2	15	5
Hadj (s)	-0.08	0.07	-0.03	0.06
Departure Headway (s)	4.6	4.8	5.0	4.9
Degree Utilization, x	0.25	0.23	0.07	0.23
Capacity (veh/h)	732	706	653	679
Control Delay (s)	9.1	9.2	8.4	9.4
Approach Delay (s)	9.1	9.2	8.4	9.4
Approach LOS	A	A	A	A

Intersection Summary			
Delay	9.2		
HCM Level of Service	A		
Intersection Capacity Utilization	34.4%	ICU Level of Service	A
Analysis Period (min)	15		

Lane Group	EBL	NBT	SBT	NET
Lane Group Flow (vph)	138	321	132	2346
v/c Ratio	0.74	0.59	0.31	0.85
Control Delay	81.6	19.5	46.4	31.2
Queue Delay	0.0	0.0	0.0	0.0
Total Delay	81.6	19.5	46.4	31.2
Queue Length 50th (ft)	121	75	99	643
Queue Length 95th (ft)	195	181	164	737
Internal Link Dist (ft)	257	1041	665	1300
Turn Bay Length (ft)				
Base Capacity (vph)	224	548	429	2745
Starvation Cap Reductn	0	0	0	0
Spillback Cap Reductn	0	0	0	0
Storage Cap Reductn	0	0	0	0
Reduced v/c Ratio	0.62	0.59	0.31	0.85

Intersection Summary

Movement	EBL	EBR	NBL	NBT	NBR	SBT	SBR	NEL2	NEL	NET	NER
Lane Configurations											
Volume (vph)	2	129	4	11	290	111	14	4	6	2192	28
Ideal Flow (vphpl)	1900	1900	1900	1900	1900	1900	1900	1900	1900	1900	1900
Total Lost time (s)	5.0			5.0		5.0				5.0	
Lane Util. Factor	1.00			1.00		1.00				0.91	
Frt	0.87			0.87		0.98				1.00	
Flt Protected	1.00			1.00		1.00				1.00	
Satd. Flow (prot)	1614			1623		1834				5075	
Flt Permitted	1.00			1.00		1.00				1.00	
Satd. Flow (perm)	1614			1619		1834				5075	
Peak-hour factor, PHF	0.95	0.95	0.95	0.95	0.95	0.95	0.95	0.95	0.95	0.95	0.95
Adj. Flow (vph)	2	136	4	12	305	117	15	4	6	2307	29
RTOR Reduction (vph)	0	0	0	169	0	0	0	0	0	1	0
Lane Group Flow (vph)	138	0	0	152	0	132	0	0	0	2345	0
Turn Type	NA		Perm	NA		NA		Perm	Perm	NA	
Protected Phases	3			4		8				6	
Permitted Phases			4					6	6		
Actuated Green, G (s)	15.8			32.0		32.0				74.0	
Effective Green, g (s)	15.8			32.0		32.0				74.0	
Actuated g/C Ratio	0.12			0.23		0.23				0.54	
Clearance Time (s)	5.0			5.0		5.0				5.0	
Vehicle Extension (s)	3.0			3.0		3.0				3.0	
Lane Grp Cap (vph)	186			379		429				2745	
v/s Ratio Prot	c0.09					0.07					
v/s Ratio Perm				c0.09						0.46	
v/c Ratio	0.74			0.40		0.31				0.85	
Uniform Delay, d1	58.5			44.3		43.3				26.8	
Progression Factor	1.00			1.00		1.00				1.00	
Incremental Delay, d2	14.7			3.1		1.9				3.6	
Delay (s)	73.2			47.4		45.1				30.4	
Level of Service	E			D		D				C	
Approach Delay (s)	73.2			47.4		45.1				30.4	
Approach LOS	E			D		D				C	

Intersection Summary			
HCM Average Control Delay	35.0	HCM Level of Service	C
HCM Volume to Capacity ratio	0.72		
Actuated Cycle Length (s)	136.8	Sum of lost time (s)	15.0
Intersection Capacity Utilization	86.0%	ICU Level of Service	E
Analysis Period (min)	15		
c Critical Lane Group			

Movement	EBL	EBR	NBL	NBT	SBT	SBR
Lane Configurations						
Volume (veh/h)	48	40	31	260	138	71
Sign Control	Stop			Free	Free	
Grade	0%			0%	0%	
Peak Hour Factor	0.93	0.93	0.93	0.93	0.93	0.93
Hourly flow rate (vph)	52	43	33	280	148	76
Pedestrians						
Lane Width (ft)						
Walking Speed (ft/s)						
Percent Blockage						
Right turn flare (veh)						
Median type				None	None	
Median storage veh)						
Upstream signal (ft)					1121	
pX, platoon unblocked						
vC, conflicting volume	533	187	225			
vC1, stage 1 conf vol						
vC2, stage 2 conf vol						
vCu, unblocked vol	533	187	225			
tC, single (s)	6.4	6.2	4.1			
tC, 2 stage (s)						
tF (s)	3.5	3.3	2.2			
p0 queue free %	90	95	98			
cM capacity (veh/h)	495	856	1344			

Direction, Lane #	EB 1	NB 1	SB 1
Volume Total	95	313	225
Volume Left	52	33	0
Volume Right	43	0	76
cSH	612	1344	1700
Volume to Capacity	0.15	0.02	0.13
Queue Length 95th (ft)	14	2	0
Control Delay (s)	12.0	1.0	0.0
Lane LOS	B	A	
Approach Delay (s)	12.0	1.0	0.0
Approach LOS	B		

Intersection Summary			
Average Delay	2.3		
Intersection Capacity Utilization	42.1%	ICU Level of Service	A
Analysis Period (min)	15		

Movement	WBL	WBR	NBT	NBR	SBL	SBT
Lane Configurations						
Volume (veh/h)	134	49	230	24	32	120
Sign Control	Stop		Free			Free
Grade	0%		0%			0%
Peak Hour Factor	0.97	0.97	0.97	0.97	0.97	0.97
Hourly flow rate (vph)	138	51	237	25	33	124
Pedestrians						
Lane Width (ft)						
Walking Speed (ft/s)						
Percent Blockage						
Right turn flare (veh)						
Median type			None			None
Median storage veh)						
Upstream signal (ft)						
pX, platoon unblocked						
vC, conflicting volume	439	249			262	
vC1, stage 1 conf vol						
vC2, stage 2 conf vol						
vCu, unblocked vol	439	249			262	
tC, single (s)	6.4	6.2			4.1	
tC, 2 stage (s)						
tF (s)	3.5	3.3			2.2	
p0 queue free %	75	94			97	
cM capacity (veh/h)	561	789			1302	

Direction, Lane #	WB 1	NB 1	SB 1
Volume Total	189	262	157
Volume Left	138	0	33
Volume Right	51	25	0
cSH	608	1700	1302
Volume to Capacity	0.31	0.15	0.03
Queue Length 95th (ft)	33	0	2
Control Delay (s)	13.6	0.0	1.8
Lane LOS	B		A
Approach Delay (s)	13.6	0.0	1.8
Approach LOS	B		

Intersection Summary			
Average Delay	4.7		
Intersection Capacity Utilization	42.1%	ICU Level of Service	A
Analysis Period (min)	15		

Movement	EBL	EBR	NBL	NBT	SBT	SBR
Lane Configurations						
Volume (veh/h)	20	31	7	252	160	92
Sign Control	Stop			Free	Free	
Grade	0%			0%	0%	
Peak Hour Factor	0.94	0.94	0.94	0.94	0.94	0.94
Hourly flow rate (vph)	21	33	7	268	170	98
Pedestrians						
Lane Width (ft)						
Walking Speed (ft/s)						
Percent Blockage						
Right turn flare (veh)						
Median type				None	None	
Median storage veh)						
Upstream signal (ft)				1230		
pX, platoon unblocked						
vC, conflicting volume	502	219	268			
vC1, stage 1 conf vol						
vC2, stage 2 conf vol						
vCu, unblocked vol	502	219	268			
tC, single (s)	6.4	6.2	4.1			
tC, 2 stage (s)						
tF (s)	3.5	3.3	2.2			
p0 queue free %	96	96	99			
cM capacity (veh/h)	526	821	1296			

Direction, Lane #	EB 1	NB 1	SB 1
Volume Total	54	276	268
Volume Left	21	7	0
Volume Right	33	0	98
cSH	673	1296	1700
Volume to Capacity	0.08	0.01	0.16
Queue Length 95th (ft)	7	0	0
Control Delay (s)	10.8	0.3	0.0
Lane LOS	B	A	
Approach Delay (s)	10.8	0.3	0.0
Approach LOS	B		

Intersection Summary			
Average Delay	1.1		
Intersection Capacity Utilization	28.9%	ICU Level of Service	A
Analysis Period (min)	15		

Movement	EBL	EBT	EBR	WBL	WBT	WBR	NBL	NBT	NBR	SBL	SBT	SBR
Lane Configurations												
Volume (veh/h)	29	2	24	53	31	1	9	230	36	1	134	53
Sign Control		Stop			Stop			Free			Free	
Grade		0%			0%			0%			0%	
Peak Hour Factor	0.92	0.92	0.92	0.92	0.92	0.92	0.92	0.92	0.92	0.92	0.92	0.92
Hourly flow rate (vph)	32	2	26	58	34	1	10	250	39	1	146	58
Pedestrians												
Lane Width (ft)												
Walking Speed (ft/s)												
Percent Blockage												
Right turn flare (veh)												
Median type								None			None	
Median storage veh)												
Upstream signal (ft)								904				
pX, platoon unblocked												
vC, conflicting volume	484	485	174	493	495	270	203			289		
vC1, stage 1 conf vol												
vC2, stage 2 conf vol												
vCu, unblocked vol	484	485	174	493	495	270	203			289		
tC, single (s)	7.1	6.5	6.2	7.1	6.5	6.2	4.1			4.1		
tC, 2 stage (s)												
tF (s)	3.5	4.0	3.3	3.5	4.0	3.3	2.2			2.2		
p0 queue free %	93	100	97	88	93	100	99			100		
cM capacity (veh/h)	463	478	869	467	472	769	1368			1273		

Direction, Lane #	EB 1	WB 1	NB 1	SB 1
Volume Total	60	92	299	204
Volume Left	32	58	10	1
Volume Right	26	1	39	58
cSH	582	471	1368	1273
Volume to Capacity	0.10	0.20	0.01	0.00
Queue Length 95th (ft)	9	18	1	0
Control Delay (s)	11.9	14.5	0.3	0.0
Lane LOS	B	B	A	A
Approach Delay (s)	11.9	14.5	0.3	0.0
Approach LOS	B	B		

Intersection Summary			
Average Delay	3.3		
Intersection Capacity Utilization	33.5%	ICU Level of Service	A
Analysis Period (min)	15		

Movement	EBL	EBT	EBR	WBL	WBT	WBR	NBL	NBT	NBR	SBL	SBT	SBR
Lane Configurations												
Volume (veh/h)	6	3	4	19	1	1	5	265	11	0	207	6
Sign Control		Stop			Stop			Free			Free	
Grade		0%			0%			0%			0%	
Peak Hour Factor	0.95	0.95	0.95	0.95	0.95	0.95	0.95	0.95	0.95	0.95	0.95	0.95
Hourly flow rate (vph)	6	3	4	20	1	1	5	279	12	0	218	6
Pedestrians												
Lane Width (ft)												
Walking Speed (ft/s)												
Percent Blockage												
Right turn flare (veh)												
Median type								None			None	
Median storage veh)												
Upstream signal (ft)								601				
pX, platoon unblocked	0.96	0.96		0.96	0.96	0.96				0.96		
vC, conflicting volume	518	522	221	522	519	285	224			291		
vC1, stage 1 conf vol												
vC2, stage 2 conf vol												
vCu, unblocked vol	478	483	221	483	480	236	224			242		
tC, single (s)	7.1	6.5	6.2	7.1	6.5	6.2	4.1			4.1		
tC, 2 stage (s)												
tF (s)	3.5	4.0	3.3	3.5	4.0	3.3	2.2			2.2		
p0 queue free %	99	99	99	96	100	100	100			100		
cM capacity (veh/h)	475	463	819	469	465	772	1344			1273		

Direction, Lane #	EB 1	WB 1	NB 1	SB 1
Volume Total	14	22	296	224
Volume Left	6	20	5	0
Volume Right	4	1	12	6
cSH	542	477	1344	1273
Volume to Capacity	0.03	0.05	0.00	0.00
Queue Length 95th (ft)	2	4	0	0
Control Delay (s)	11.8	12.9	0.2	0.0
Lane LOS	B	B	A	
Approach Delay (s)	11.8	12.9	0.2	0.0
Approach LOS	B	B		

Intersection Summary			
Average Delay	0.9		
Intersection Capacity Utilization	28.6%	ICU Level of Service	A
Analysis Period (min)	15		

Movement	EBL	EBT	EBR	WBL	WBT	WBR	NBL	NBT	NBR	SBL	SBT	SBR
Lane Configurations												
Volume (veh/h)	7	0	34	3	10	1	9	273	7	0	190	39
Sign Control		Stop			Stop			Free			Free	
Grade		0%			0%			0%			0%	
Peak Hour Factor	0.97	0.97	0.97	0.97	0.97	0.97	0.97	0.97	0.97	0.97	0.97	0.97
Hourly flow rate (vph)	7	0	35	3	10	1	9	281	7	0	196	40
Pedestrians												
Lane Width (ft)												
Walking Speed (ft/s)												
Percent Blockage												
Right turn flare (veh)												
Median type								None			None	
Median storage veh)												
Upstream signal (ft)								300				
pX, platoon unblocked	0.88	0.88		0.88	0.88	0.88				0.88		
vC, conflicting volume	526	523	216	555	540	285	236			289		
vC1, stage 1 conf vol												
vC2, stage 2 conf vol												
vCu, unblocked vol	391	388	216	424	407	117	236			122		
tC, single (s)	7.1	6.5	6.2	7.1	6.5	6.2	4.1			4.1		
tC, 2 stage (s)												
tF (s)	3.5	4.0	3.3	3.5	4.0	3.3	2.2			2.2		
p0 queue free %	99	100	96	99	98	100	99			100		
cM capacity (veh/h)	487	477	824	452	465	821	1331			1288		

Direction, Lane #	EB 1	WB 1	NB 1	SB 1
Volume Total	42	14	298	236
Volume Left	7	3	9	0
Volume Right	35	1	7	40
cSH	737	477	1331	1288
Volume to Capacity	0.06	0.03	0.01	0.00
Queue Length 95th (ft)	5	2	1	0
Control Delay (s)	10.2	12.8	0.3	0.0
Lane LOS	B	B	A	
Approach Delay (s)	10.2	12.8	0.3	0.0
Approach LOS	B	B		

Intersection Summary				
Average Delay		1.2		
Intersection Capacity Utilization		32.1%	ICU Level of Service	A
Analysis Period (min)		15		

Lane Group	EBL	EBT	EBR	WBL	WBT	NBL	NBT	SBL	SBT
Lane Group Flow (vph)	158	495	65	193	483	140	353	24	226
v/c Ratio	0.27	0.77	0.14	0.41	0.37	0.34	0.48	0.08	0.39
Control Delay	11.5	36.6	8.4	13.1	23.4	28.0	21.7	25.5	36.9
Queue Delay	0.0	0.0	0.0	0.0	0.0	0.0	0.0	0.0	0.0
Total Delay	11.5	36.6	8.4	13.1	23.4	28.0	21.7	25.5	36.9
Queue Length 50th (ft)	42	229	1	53	114	64	54	10	63
Queue Length 95th (ft)	82	370	33	99	173	124	103	31	108
Internal Link Dist (ft)		1915			531		229		156
Turn Bay Length (ft)	130			95		155		130	
Base Capacity (vph)	580	847	644	509	1710	409	950	314	806
Starvation Cap Reductn	0	0	0	0	0	0	0	0	0
Spillback Cap Reductn	0	0	0	0	0	0	0	0	0
Storage Cap Reductn	0	0	0	0	0	0	0	0	0
Reduced v/c Ratio	0.27	0.58	0.10	0.38	0.28	0.34	0.37	0.08	0.28

Intersection Summary

Movement	EBL	EBT	EBR	WBL	WBT	WBR	NBL	NBT	NBR	SBL	SBT	SBR
Lane Configurations												
Volume (vph)	144	450	59	176	418	22	127	176	146	22	167	38
Ideal Flow (vphpl)	1900	1900	1900	1900	1900	1900	1900	1900	1900	1900	1900	1900
Total Lost time (s)	3.0	3.0	5.0	3.0	3.0		3.0	3.0		3.0	3.0	
Lane Util. Factor	1.00	1.00	1.00	1.00	0.95		1.00	0.95		1.00	0.95	
Frt	1.00	1.00	0.85	1.00	0.99		1.00	0.93		1.00	0.97	
Flt Protected	0.95	1.00	1.00	0.95	1.00		0.95	1.00		0.95	1.00	
Satd. Flow (prot)	1770	1863	1583	1770	3513		1770	3299		1770	3441	
Flt Permitted	0.48	1.00	1.00	0.36	1.00		0.61	1.00		0.54	1.00	
Satd. Flow (perm)	888	1863	1583	680	3513		1138	3299		1007	3441	
Peak-hour factor, PHF	0.91	0.91	0.91	0.91	0.91	0.91	0.91	0.91	0.91	0.91	0.91	0.91
Adj. Flow (vph)	158	495	65	193	459	24	140	193	160	24	184	42
RTOR Reduction (vph)	0	0	46	0	3	0	0	133	0	0	18	0
Lane Group Flow (vph)	158	495	19	193	480	0	140	220	0	24	208	0
Turn Type	custom	NA	custom	custom	NA		custom	NA		custom	NA	
Protected Phases	1 2	2 4		1 3	3 4		5 6	6 8		5 7	7 8	
Permitted Phases	4		4	4			8			8		
Actuated Green, G (s)	45.2	32.0	26.9	42.2	35.0		24.9	14.7		19.5	15.3	
Effective Green, g (s)	45.2	32.0	26.9	42.2	35.0		24.9	14.7		19.5	15.3	
Actuated g/C Ratio	0.45	0.32	0.27	0.42	0.35		0.25	0.15		0.20	0.15	
Clearance Time (s)			5.0									
Vehicle Extension (s)			3.0									
Lane Grp Cap (vph)	563	597	426	454	1231		380	485		272	527	
v/s Ratio Prot	0.05	c0.27		c0.07	c0.14		c0.06	0.07		0.01	c0.06	
v/s Ratio Perm	0.08		0.01	0.11			0.04			0.01		
v/c Ratio	0.28	0.83	0.04	0.43	0.39		0.37	0.45		0.09	0.40	
Uniform Delay, d1	16.4	31.4	27.0	19.0	24.4		30.6	38.9		32.8	38.1	
Progression Factor	1.00	1.00	1.00	1.00	1.00		1.00	1.00		1.00	1.00	
Incremental Delay, d2	0.3	9.3	0.0	0.6	0.2		0.6	0.7		0.1	0.5	
Delay (s)	16.7	40.7	27.0	19.6	24.6		31.2	39.6		32.9	38.6	
Level of Service	B	D	C	B	C		C	D		C	D	
Approach Delay (s)		34.2			23.2			37.2			38.1	
Approach LOS		C			C			D			D	

Intersection Summary			
HCM Average Control Delay	31.9	HCM Level of Service	C
HCM Volume to Capacity ratio	0.55		
Actuated Cycle Length (s)	99.9	Sum of lost time (s)	18.0
Intersection Capacity Utilization	60.5%	ICU Level of Service	B
Analysis Period (min)	15		
c Critical Lane Group			

Movement	EBL	EBT	WBT	WBR	SBL	SBR
Lane Configurations						
Volume (veh/h)	229	458	535	21	38	94
Sign Control		Free	Free		Stop	
Grade		0%	0%		0%	
Peak Hour Factor	0.94	0.94	0.94	0.94	0.94	0.94
Hourly flow rate (vph)	244	487	569	22	40	100
Pedestrians						
Lane Width (ft)						
Walking Speed (ft/s)						
Percent Blockage						
Right turn flare (veh)						
Median type		None	None			
Median storage veh)						
Upstream signal (ft)		611				
pX, platoon unblocked					0.83	
vC, conflicting volume	591				1555	580
vC1, stage 1 conf vol						
vC2, stage 2 conf vol						
vCu, unblocked vol	591				1566	580
tC, single (s)	4.1				6.4	6.2
tC, 2 stage (s)						
tF (s)	2.2				3.5	3.3
p0 queue free %	75				47	81
cM capacity (veh/h)	984				76	514

Direction, Lane #	EB 1	EB 2	WB 1	SB 1
Volume Total	244	487	591	140
Volume Left	244	0	0	40
Volume Right	0	0	22	100
cSH	984	1700	1700	194
Volume to Capacity	0.25	0.29	0.35	0.73
Queue Length 95th (ft)	24	0	0	116
Control Delay (s)	9.9	0.0	0.0	61.2
Lane LOS	A			F
Approach Delay (s)	3.3		0.0	61.2
Approach LOS				F

Intersection Summary			
Average Delay	7.5		
Intersection Capacity Utilization	60.0%	ICU Level of Service	B
Analysis Period (min)	15		

Lane Group	EBL	EBT	WBL	WBT	NBL	NBT	SBL	SBT
Lane Group Flow (vph)	316	563	302	622	136	1941	207	2383
v/c Ratio	0.96	0.86	1.05	1.04	0.94	0.92	1.00	1.04
Control Delay	96.7	67.2	120.8	101.9	91.0	45.8	98.8	66.6
Queue Delay	0.0	0.0	0.0	0.0	0.0	0.0	0.0	0.0
Total Delay	96.7	67.2	120.8	101.9	91.0	45.8	98.8	66.6
Queue Length 50th (ft)	288	255	~328	~334	72	598	138	~851
Queue Length 95th (ft)	#479	#347	#536	#465	#209	672	#309	#941
Internal Link Dist (ft)		364		1915		469		768
Turn Bay Length (ft)			286		160		130	
Base Capacity (vph)	329	654	288	599	144	2117	207	2294
Starvation Cap Reductn	0	0	0	0	0	0	0	0
Spillback Cap Reductn	0	0	0	0	0	0	0	0
Storage Cap Reductn	0	0	0	0	0	0	0	0
Reduced v/c Ratio	0.96	0.86	1.05	1.04	0.94	0.92	1.00	1.04

Intersection Summary

~ Volume exceeds capacity, queue is theoretically infinite.
Queue shown is maximum after two cycles.

95th percentile volume exceeds capacity, queue may be longer.
Queue shown is maximum after two cycles.

Movement	EBL	EBT	EBR	WBL	WBT	WBR	NBL	NBT	NBR	SBL	SBT	SBR
Lane Configurations												
Volume (vph)	297	419	110	379	472	18	128	1610	214	195	1936	304
Ideal Flow (vphpl)	1900	1900	1900	1900	1900	1900	1900	1900	1900	1900	1900	1900
Total Lost time (s)	5.0	5.0		5.0	5.0		3.0	5.0		3.0	5.0	
Lane Util. Factor	1.00	0.95		0.91	0.91		1.00	0.91		1.00	0.91	
Frt	1.00	0.97		1.00	1.00		1.00	0.98		1.00	0.98	
Flt Protected	0.95	1.00		0.95	0.99		0.95	1.00		0.95	1.00	
Satd. Flow (prot)	1770	3429		1610	3347		1770	4996		1770	4982	
Flt Permitted	0.95	1.00		0.95	0.99		0.07	1.00		0.06	1.00	
Satd. Flow (perm)	1770	3429		1610	3347		126	4996		120	4982	
Peak-hour factor, PHF	0.94	0.94	0.94	0.94	0.94	0.94	0.94	0.94	0.94	0.94	0.94	0.94
Adj. Flow (vph)	316	446	117	403	502	19	136	1713	228	207	2060	323
RTOR Reduction (vph)	0	17	0	0	2	0	0	12	0	0	15	0
Lane Group Flow (vph)	316	546	0	302	620	0	136	1929	0	207	2368	0
Turn Type	Split	NA		Split	NA		pm+pt	NA		pm+pt	NA	
Protected Phases	4	4		8	8		5	2		1	6	
Permitted Phases							2			6		
Actuated Green, G (s)	26.0	26.0		25.0	25.0		66.0	59.0		74.0	64.0	
Effective Green, g (s)	26.0	26.0		25.0	25.0		66.0	59.0		74.0	64.0	
Actuated g/C Ratio	0.19	0.19		0.18	0.18		0.47	0.42		0.53	0.46	
Clearance Time (s)	5.0	5.0		5.0	5.0		3.0	5.0		3.0	5.0	
Vehicle Extension (s)	3.0	3.0		3.0	3.0		3.0	3.0		3.0	3.0	
Lane Grp Cap (vph)	329	637		288	598		142	2105		205	2277	
v/s Ratio Prot	c0.18	0.16		c0.19	0.19		0.05	0.39		c0.09	c0.48	
v/s Ratio Perm							0.40			0.45		
v/c Ratio	0.96	0.86		1.05	1.04		0.96	0.92		1.01	1.04	
Uniform Delay, d1	56.5	55.2		57.5	57.5		35.3	38.2		43.9	38.0	
Progression Factor	1.00	1.00		1.00	1.00		1.00	1.00		1.00	1.00	
Incremental Delay, d2	39.0	11.0		66.3	46.8		62.0	7.8		65.4	30.2	
Delay (s)	95.5	66.2		123.8	104.3		97.3	45.9		109.3	68.2	
Level of Service	F	E		F	F		F	D		F	E	
Approach Delay (s)		76.7			110.7			49.3			71.5	
Approach LOS		E			F			D			E	

Intersection Summary			
HCM Average Control Delay	70.7	HCM Level of Service	E
HCM Volume to Capacity ratio	1.00		
Actuated Cycle Length (s)	140.0	Sum of lost time (s)	13.0
Intersection Capacity Utilization	100.0%	ICU Level of Service	F
Analysis Period (min)	15		
c Critical Lane Group			

Movement	EBL	EBT	EBR	WBL	WBT	WBR	NBL	NBT	NBR	SBL	SBT	SBR
Lane Configurations												
Volume (vph)	297	419	110	379	472	18	128	1610	214	195	1936	304
Movement Number	7	4	14	3	8	18	5	2	12	1	6	16
Initial Queue, veh	0	0	0	0	0	0	0	0	0	0	0	0
Ped-Bike Adj. Factor (A_pbT)	1.00		1.00	1.00		1.00	1.00		1.00	1.00		1.00
Parking, Bus Adj. Factors	1.00	1.00	1.00	1.00	1.00	1.00	1.00	1.00	1.00	1.00	1.00	1.00
Adj. Sat. Flow Rate, veh/h/ln	1863	1863	1863	1863	1863	1863	1863	1863	1863	1863	1863	1863
Lanes	1	2	0	1	2	0	1	3	0	1	3	0
Lane Assignment												
Capacity, veh/h	329	530	138	317	637	24	142	1916	253	219	2033	313
Proportion Arriving On Green	0.19	0.19	0.19	0.18	0.18	0.18	0.05	0.42	0.42	0.09	0.46	0.46
Movement Delay, s/veh	95.1	71.4	73.8	202.6	66.9	67.2	98.3	46.4	53.6	87.2	62.5	78.8
Movement LOS	F	E	E	F	E	E	F	D	D	F	F	F
Approach Volume, veh/h		879			924			2077			2590	
Approach Delay, s/veh		80.7			126.2			52.1			69.6	
Approach LOS		F			F			D			E	

Timer:	1	2	3	4	5	6	7	8
Assigned Phase	1	2	8	4	5	6		
Case No	1.1	4.0	10.0	10.0	1.1	4.0		
Phase Duration (G+Y+Rc), s	15.00	64.00	30.00	31.00	10.00	69.00		
Change Period (Y+Rc), s	3.00	5.00	5.00	5.00	3.00	5.00		
Max. Allowable Headway (MAH), s	4.00	3.95	3.95	3.98	4.00	3.95		
Maximum Green Setting (Gmax), s	12.00	59.00	25.00	26.00	7.00	64.00		
Max. Queue Clearance Time (g_c+I1), s	12.95	51.34	27.00	26.70	8.48	66.00		
Green Extension Time (g_e), s	0.00	7.31	0.00	0.00	0.00	0.00		
Probability of Phase Call (p_c)	1.000	1.000	1.000	1.000	0.995	1.000		
Probability of Max Out (p_x)	1.000	0.977	1.000	1.000	1.000	1.000		

Left-Turn Movement Data					
Assigned Movement	1		3	7	5
Mvmt. Sat Flow, veh/h	1774.04		1774.04	1774.04	1774.04

Through Movement Data					
Assigned Movement		2	8	4	6
Mvmt. Sat Flow, veh/h		4545.43	3565.74	2851.86	4447.58

Right-Turn Movement Data					
Assigned Movement		12	18	14	16
Mvmt. Sat Flow, veh/h		601.39	135.78	742.58	684.56

Left Lane Group Data								
Assigned Movement	1	0	3	7	5	0	0	0
Lane Assignment	L (Pr/Pm)		L	LL (Pr/Pm)				
Lanes in Group	1	0	1	1	1	0	0	0
Group Volume (v), veh/h	207.4	0.0	403.2	316.0	136.2	0.0	0.0	0.0
Group Sat. Flow (s), veh/h/ln	1774.0	0.0	1774.0	1774.0	1774.0	0.0	0.0	0.0
Queue Serve Time (g_s), s	11.0	0.0	25.0	24.7	6.5	0.0	0.0	0.0
Cycle Queue Clear Time (g_c), s	11.0	0.0	25.0	24.7	6.5	0.0	0.0	0.0

Perm LT Sat Flow Rate (s_l), veh/h/ln	227.3	0.0	1774.0	1774.0	146.9	0.0	0.0	0.0
Shared LT Sat Flow (s_sh), veh/h/ln	0.0	0.0	0.0	0.0	0.0	0.0	0.0	0.0
Perm LT Eff. Green (g_p), s	66.0	0.0	0.0	0.0	59.0	0.0	0.0	0.0
Perm LT Serve Time (g_u), s	9.7	0.0	0.0	0.0	2.0	0.0	0.0	0.0
Perm LT Que Serve Time (g_ps), s	9.7	0.0	0.0	0.0	2.0	0.0	0.0	0.0
Time to First Blk (g_f), s	0.0	0.0	0.0	0.0	0.0	0.0	0.0	0.0
Serve Time pre Blk (g_fs), s	0.0	0.0	0.0	0.0	0.0	0.0	0.0	0.0
Proportion LT Inside Lane (P_L)	1.000	0.000	1.000	1.000	1.000	0.000	0.000	0.000
Lane Group Capacity (c), veh/h	219.2	0.0	316.8	329.5	142.2	0.0	0.0	0.0
Volume-to-Capacity Ratio (X)	0.947	0.000	1.273	0.959	0.957	0.000	0.000	0.000
Available Capacity (c_a), veh/h	219.2	0.0	316.8	329.5	142.2	0.0	0.0	0.0
Upstream Filter Factor (I)	1.000	0.000	1.000	1.000	1.000	0.000	0.000	0.000
Uniform Delay (d1), s/veh	41.3	0.0	57.5	56.5	35.9	0.0	0.0	0.0
Incremental Delay (d2), s/veh	45.8	0.0	145.1	38.6	62.4	0.0	0.0	0.0
Initial Queue Delay (d3), s/veh	0.0	0.0	0.0	0.0	0.0	0.0	0.0	0.0
Control Delay (d), s/veh	87.2	0.0	202.6	95.1	98.3	0.0	0.0	0.0
First-Term Queue (Q1), veh/ln	4.7	0.0	11.2	11.1	2.8	0.0	0.0	0.0
Second-Term Queue (Q2), veh/ln	2.8	0.0	12.8	3.5	2.5	0.0	0.0	0.0
Third-Term Queue (Q3), veh/ln	0.0	0.0	0.0	0.0	0.0	0.0	0.0	0.0
Percentile bk-of-que factor (f_B%)	1.000	0.000	1.000	1.000	1.000	0.000	0.000	0.000
Percentile Back of Queue (Q%), veh/ln	7.5	0.0	24.0	14.6	5.2	0.0	0.0	0.0
Percentile Storage Ratio (RQ%)	1.47	0.00	2.13	1.07	0.83	0.00	0.00	0.00
Initial Queue (Qb), veh	0.0	0.0	0.0	0.0	0.0	0.0	0.0	0.0
Final (Residual) Queue (Qe), veh	0.0	0.0	21.6	0.0	0.0	0.0	0.0	0.0
Saturated Delay (ds), s/veh	0.0	0.0	0.0	0.0	0.0	0.0	0.0	0.0
Saturated Queue (Qs), veh	0.0	0.0	0.0	0.0	0.0	0.0	0.0	0.0
Saturated Capacity (cs), veh/h	0.0	0.0	0.0	0.0	0.0	0.0	0.0	0.0
Initial Queue Clear Time (tc), h	0.0	0.0	0.3	0.0	0.0	0.0	0.0	0.0

Middle Lane Group Data								
Assigned Movement	0	2	8	4	0	6	0	0
Lane Assignment		T	T	T		T		
Lanes in Group	0	2	1	1	0	2	0	0
Group Volume (v), veh/h	0.0	1275.4	262.0	289.9	0.0	1560.0	0.0	0.0
Group Sat. Flow (s), veh/h/ln	0.0	1695.1	1862.7	1862.7	0.0	1695.1	0.0	0.0
Queue Serve Time (g_s), s	0.0	48.9	18.8	21.0	0.0	64.0	0.0	0.0
Cycle Queue Clear Time (g_c), s	0.0	48.9	18.8	21.0	0.0	64.0	0.0	0.0
Lane Group Capacity (c), veh/h	0.0	1428.7	332.6	345.9	0.0	1549.8	0.0	0.0
Volume-to-Capacity Ratio (X)	0.000	0.893	0.788	0.838	0.000	1.007	0.000	0.000
Available Capacity (c_a), veh/h	0.0	1428.7	332.6	345.9	0.0	1549.8	0.0	0.0
Upstream Filter Factor (I)	0.000	1.000	1.000	1.000	0.000	1.000	0.000	0.000
Uniform Delay (d1), s/veh	0.0	37.6	55.0	55.0	0.0	38.0	0.0	0.0
Incremental Delay (d2), s/veh	0.0	8.9	11.9	16.4	0.0	24.5	0.0	0.0
Initial Queue Delay (d3), s/veh	0.0	0.0	0.0	0.0	0.0	0.0	0.0	0.0
Control Delay (d), s/veh	0.0	46.4	66.9	71.4	0.0	62.5	0.0	0.0
First-Term Queue (Q1), veh/ln	0.0	20.1	8.9	9.9	0.0	26.0	0.0	0.0
Second-Term Queue (Q2), veh/ln	0.0	1.8	1.1	1.6	0.0	5.3	0.0	0.0
Third-Term Queue (Q3), veh/ln	0.0	0.0	0.0	0.0	0.0	0.0	0.0	0.0
Percentile bk-of-que factor (f_B%)	0.000	1.000	1.000	1.000	0.000	1.000	0.000	0.000
Percentile Back of Queue (Q%), veh/ln	0.0	21.8	10.0	11.5	0.0	31.3	0.0	0.0
Percentile Storage Ratio (RQ%)	0.00	1.21	0.14	0.84	0.00	1.08	0.00	0.00

Initial Queue (Qb), veh	0.0	0.0	0.0	0.0	0.0	0.0	0.0	0.0
Final (Residual) Queue (Qe), veh	0.0	0.0	0.0	0.0	0.0	2.6	0.0	0.0
Saturated Delay (ds), s/veh	0.0	0.0	0.0	0.0	0.0	0.0	0.0	0.0
Saturated Queue (Qs), veh	0.0	0.0	0.0	0.0	0.0	0.0	0.0	0.0
Saturated Capacity (cs), veh/h	0.0	0.0	0.0	0.0	0.0	0.0	0.0	0.0
Initial Queue Clear Time (tc), h	0.0	0.0	0.0	0.0	0.0	0.3	0.0	0.0

Right Lane Group Data								
Assigned Movement	0	12	18	14	0	16	0	0
Lane Assignment		T+R	T+R	T+R		T+R		
Lanes in Group	0	1	1	1	0	1	0	0
Group Volume (v), veh/h	0.0	665.0	259.3	272.9	0.0	822.9	0.0	0.0
Group Sat. Flow (s), veh/h/ln	0.0	1756.6	1838.8	1731.7	0.0	1741.9	0.0	0.0
Queue Serve Time (g_s), s	0.0	49.3	18.9	21.3	0.0	64.0	0.0	0.0
Cycle Queue Clear Time (g_c), s	0.0	49.3	18.9	21.3	0.0	64.0	0.0	0.0
Prot RT Sat Flow Rate (s_R), veh/h/ln	0.0	0.0	0.0	0.0	0.0	0.0	0.0	0.0
Prot RT Eff. Green (g_R), s	0.0	0.0	0.0	0.0	0.0	0.0	0.0	0.0
Proportion RT Outside Lane (P_R)	0.000	0.342	0.074	0.429	0.000	0.393	0.000	0.000
Lane Group Capacity (c), veh/h	0.0	740.3	328.4	321.6	0.0	796.3	0.0	0.0
Volume-to-Capacity Ratio (X)	0.000	0.898	0.790	0.849	0.000	1.033	0.000	0.000
Available Capacity (c_a), veh/h	0.0	740.3	328.4	321.6	0.0	796.3	0.0	0.0
Upstream Filter Factor (I)	0.000	1.000	1.000	1.000	0.000	1.000	0.000	0.000
Uniform Delay (d1), s/veh	0.0	37.7	55.0	55.1	0.0	38.0	0.0	0.0
Incremental Delay (d2), s/veh	0.0	15.9	12.2	18.8	0.0	40.8	0.0	0.0
Initial Queue Delay (d3), s/veh	0.0	0.0	0.0	0.0	0.0	0.0	0.0	0.0
Control Delay (d), s/veh	0.0	53.6	67.2	73.8	0.0	78.8	0.0	0.0
First-Term Queue (Q1), veh/ln	0.0	21.0	8.8	9.3	0.0	26.7	0.0	0.0
Second-Term Queue (Q2), veh/ln	0.0	3.3	1.1	1.7	0.0	9.0	0.0	0.0
Third-Term Queue (Q3), veh/ln	0.0	0.0	0.0	0.0	0.0	0.0	0.0	0.0
Percentile bk-of-que factor (f_B%)	0.000	1.000	1.000	1.000	0.000	1.000	0.000	0.000
Percentile Back of Queue (Q%), veh/ln	0.0	24.3	9.9	11.0	0.0	35.8	0.0	0.0
Percentile Storage Ratio (RQ%)	0.00	1.35	0.14	0.81	0.00	1.24	0.00	0.00
Initial Queue (Qb), veh	0.0	0.0	0.0	0.0	0.0	0.0	0.0	0.0
Final (Residual) Queue (Qe), veh	0.0	0.0	0.0	0.0	0.0	6.7	0.0	0.0
Saturated Delay (ds), s/veh	0.0	0.0	0.0	0.0	0.0	0.0	0.0	0.0
Saturated Queue (Qs), veh	0.0	0.0	0.0	0.0	0.0	0.0	0.0	0.0
Saturated Capacity (cs), veh/h	0.0	0.0	0.0	0.0	0.0	0.0	0.0	0.0
Initial Queue Clear Time (tc), h	0.0	0.0	0.0	0.0	0.0	0.3	0.0	0.0

Intersection Summary	
HCM Average Control Delay	73.6
HCM Level of Service	E

Movement	EBL	EBT	EBR	WBL	WBT	WBR	NEL	NET	NER	SWL	SWT	SWR
Lane Configurations												
Volume (veh/h)	37	6	0	0	28	12	64	2091	34	0	0	0
Sign Control		Stop			Stop			Free			Free	
Grade		0%			0%			0%			0%	
Peak Hour Factor	0.95	0.95	0.95	0.95	0.95	0.95	0.95	0.95	0.95	0.95	0.95	0.95
Hourly flow rate (vph)	39	6	0	0	29	13	67	2201	36	0	0	0
Pedestrians												
Lane Width (ft)												
Walking Speed (ft/s)												
Percent Blockage												
Right turn flare (veh)												
Median type								None			None	
Median storage veh)												
Upstream signal (ft)												
pX, platoon unblocked												
vC, conflicting volume	896	2372	0	2357	2354	752	0			2237		
vC1, stage 1 conf vol												
vC2, stage 2 conf vol												
vCu, unblocked vol	896	2372	0	2357	2354	752	0			2237		
tC, single (s)	7.5	6.5	6.9	7.5	6.5	6.9	4.1			4.1		
tC, 2 stage (s)												
tF (s)	3.5	4.0	3.3	3.5	4.0	3.3	2.2			2.2		
p0 queue free %	31	81	100	100	13	96	96			100		
cM capacity (veh/h)	57	33	1084	16	34	353	1622			228		

Direction, Lane #	EB 1	WB 1	NE 1	NE 2	NE 3
Volume Total	45	42	618	1101	586
Volume Left	39	0	67	0	0
Volume Right	0	13	0	0	36
cSH	52	46	1622	1700	1700
Volume to Capacity	0.88	0.91	0.04	0.65	0.34
Queue Length 95th (ft)	94	93	3	0	0
Control Delay (s)	215.5	241.2	1.2	0.0	0.0
Lane LOS	F	F	A		
Approach Delay (s)	215.5	241.2	0.3		
Approach LOS	F	F			

Intersection Summary			
Average Delay	8.6		
Intersection Capacity Utilization	58.2%	ICU Level of Service	B
Analysis Period (min)	15		

Movement	EBL	EBT	EBR	WBL	WBT	WBR	NEL	NET	NER	SWL	SWT	SWR
Lane Configurations												
Volume (veh/h)	0	4	0	0	91	0	2	2274	12	0	0	0
Sign Control		Stop			Stop			Free			Free	
Grade		0%			0%			0%			0%	
Peak Hour Factor	0.89	0.89	0.89	0.89	0.89	0.89	0.89	0.89	0.89	0.89	0.89	0.89
Hourly flow rate (vph)	0	4	0	0	102	0	2	2555	13	0	0	0
Pedestrians												
Lane Width (ft)												
Walking Speed (ft/s)												
Percent Blockage												
Right turn flare (veh)												
Median type								None			None	
Median storage veh)												
Upstream signal (ft)												
pX, platoon unblocked												
vC, conflicting volume	907	2573	0	2569	2566	858	0			2569		
vC1, stage 1 conf vol												
vC2, stage 2 conf vol												
vCu, unblocked vol	907	2573	0	2569	2566	858	0			2569		
tC, single (s)	7.5	6.5	6.9	7.5	6.5	6.9	4.1			4.1		
tC, 2 stage (s)												
tF (s)	3.5	4.0	3.3	3.5	4.0	3.3	2.2			2.2		
p0 queue free %	0	82	100	100	0	100	100			100		
cM capacity (veh/h)	0	25	1084	11	26	300	1622			168		

Direction, Lane #	EB 1	WB 1	NE 1	NE 2	NE 3
Volume Total	4	102	641	1278	652
Volume Left	0	0	2	0	0
Volume Right	0	0	0	0	13
cSH	25	26	1622	1700	1700
Volume to Capacity	0.18	3.98	0.00	0.75	0.38
Queue Length 95th (ft)	13	Err	0	0	0
Control Delay (s)	174.9	Err	0.0	0.0	0.0
Lane LOS	F	F	A		
Approach Delay (s)	174.9	Err	0.0		
Approach LOS	F	F			

Intersection Summary			
Average Delay	382.1		
Intersection Capacity Utilization	55.7%	ICU Level of Service	B
Analysis Period (min)	15		

Movement	EBL	EBR	NBL	NBT	SBT	SBR
Lane Configurations						
Volume (veh/h)	1	2	6	267	137	0
Sign Control	Stop			Free	Free	
Grade	0%			0%	0%	
Peak Hour Factor	0.92	0.92	0.92	0.92	0.92	0.92
Hourly flow rate (vph)	1	2	7	290	149	0
Pedestrians						
Lane Width (ft)						
Walking Speed (ft/s)						
Percent Blockage						
Right turn flare (veh)						
Median type				None	None	
Median storage veh)						
Upstream signal (ft)						
pX, platoon unblocked						
vC, conflicting volume	452	149	149			
vC1, stage 1 conf vol						
vC2, stage 2 conf vol						
vCu, unblocked vol	452	149	149			
tC, single (s)	6.4	6.2	4.1			
tC, 2 stage (s)						
tF (s)	3.5	3.3	2.2			
p0 queue free %	100	100	100			
cM capacity (veh/h)	563	898	1433			

Direction, Lane #	EB 1	NB 1	SB 1
Volume Total	3	297	149
Volume Left	1	7	0
Volume Right	2	0	0
cSH	749	1433	1700
Volume to Capacity	0.00	0.00	0.09
Queue Length 95th (ft)	0	0	0
Control Delay (s)	9.8	0.2	0.0
Lane LOS	A	A	
Approach Delay (s)	9.8	0.2	0.0
Approach LOS	A		

Intersection Summary			
Average Delay	0.2		
Intersection Capacity Utilization	28.9%	ICU Level of Service	A
Analysis Period (min)	15		

Movement	EBL	EBR	NBL	NBT	SBT	SBR
Lane Configurations						
Volume (veh/h)	9	3	10	260	134	1
Sign Control	Stop			Free	Free	
Grade	0%			0%	0%	
Peak Hour Factor	0.92	0.92	0.92	0.92	0.92	0.92
Hourly flow rate (vph)	10	3	11	283	146	1
Pedestrians						
Lane Width (ft)						
Walking Speed (ft/s)						
Percent Blockage						
Right turn flare (veh)						
Median type				None	None	
Median storage veh)						
Upstream signal (ft)						
pX, platoon unblocked						
vC, conflicting volume	451	146	147			
vC1, stage 1 conf vol						
vC2, stage 2 conf vol						
vCu, unblocked vol	451	146	147			
tC, single (s)	6.4	6.2	4.1			
tC, 2 stage (s)						
tF (s)	3.5	3.3	2.2			
p0 queue free %	98	100	99			
cM capacity (veh/h)	562	901	1435			

Direction, Lane #	EB 1	NB 1	SB 1
Volume Total	13	293	147
Volume Left	10	11	0
Volume Right	3	0	1
cSH	620	1435	1700
Volume to Capacity	0.02	0.01	0.09
Queue Length 95th (ft)	2	1	0
Control Delay (s)	10.9	0.3	0.0
Lane LOS	B	A	
Approach Delay (s)	10.9	0.3	0.0
Approach LOS	B		

Intersection Summary			
Average Delay	0.5		
Intersection Capacity Utilization	31.8%	ICU Level of Service	A
Analysis Period (min)	15		

Movement	EBL	EBR	NBL	NBT	SBT	SBR
Lane Configurations						
Volume (veh/h)	15	17	31	235	110	1
Sign Control	Stop			Free	Free	
Grade	0%			0%	0%	
Peak Hour Factor	0.92	0.92	0.92	0.92	0.92	0.92
Hourly flow rate (vph)	16	18	34	255	120	1
Pedestrians						
Lane Width (ft)						
Walking Speed (ft/s)						
Percent Blockage						
Right turn flare (veh)						
Median type				None	None	
Median storage veh)						
Upstream signal (ft)						
pX, platoon unblocked						
vC, conflicting volume	443	120	121			
vC1, stage 1 conf vol						
vC2, stage 2 conf vol						
vCu, unblocked vol	443	120	121			
tC, single (s)	6.4	6.2	4.1			
tC, 2 stage (s)						
tF (s)	3.5	3.3	2.2			
p0 queue free %	97	98	98			
cM capacity (veh/h)	559	931	1467			

Direction, Lane #	EB 1	NB 1	SB 1
Volume Total	35	289	121
Volume Left	16	34	0
Volume Right	18	0	1
cSH	710	1467	1700
Volume to Capacity	0.05	0.02	0.07
Queue Length 95th (ft)	4	2	0
Control Delay (s)	10.3	1.1	0.0
Lane LOS	B	A	
Approach Delay (s)	10.3	1.1	0.0
Approach LOS	B		

Intersection Summary			
Average Delay	1.5		
Intersection Capacity Utilization	30.7%	ICU Level of Service	A
Analysis Period (min)	15		

Movement	EBL	EBR	NBL	NBT	SBT	SBR
Lane Configurations						
Volume (veh/h)	20	25	25	210	76	32
Sign Control	Stop			Free	Free	
Grade	0%			0%	0%	
Peak Hour Factor	0.92	0.92	0.92	0.92	0.92	0.92
Hourly flow rate (vph)	22	27	27	228	83	35
Pedestrians						
Lane Width (ft)						
Walking Speed (ft/s)						
Percent Blockage						
Right turn flare (veh)						
Median type				None	None	
Median storage veh)						
Upstream signal (ft)						
pX, platoon unblocked						
vC, conflicting volume	383	100	117			
vC1, stage 1 conf vol						
vC2, stage 2 conf vol						
vCu, unblocked vol	383	100	117			
tC, single (s)	6.4	6.2	4.1			
tC, 2 stage (s)						
tF (s)	3.5	3.3	2.2			
p0 queue free %	96	97	98			
cM capacity (veh/h)	608	956	1471			

Direction, Lane #	EB 1	NB 1	SB 1
Volume Total	49	255	117
Volume Left	22	27	0
Volume Right	27	0	35
cSH	762	1471	1700
Volume to Capacity	0.06	0.02	0.07
Queue Length 95th (ft)	5	1	0
Control Delay (s)	10.0	0.9	0.0
Lane LOS	B	A	
Approach Delay (s)	10.0	0.9	0.0
Approach LOS	B		

Intersection Summary			
Average Delay	1.7		
Intersection Capacity Utilization	29.1%	ICU Level of Service	A
Analysis Period (min)	15		

Movement	EBL	EBT	EBR	WBL	WBT	WBR	NBL	NBT	NBR	SBL	SBT	SBR
Lane Configurations												
Sign Control		Stop			Stop			Stop			Stop	
Volume (vph)	4	104	60	36	112	2	25	180	26	2	4	5
Peak Hour Factor	0.92	0.92	0.92	0.92	0.92	0.92	0.92	0.92	0.92	0.92	0.92	0.92
Hourly flow rate (vph)	4	113	65	39	122	2	27	196	28	2	4	5

Direction, Lane #	EB 1	WB 1	NB 1	SB 1
Volume Total (vph)	183	163	251	12
Volume Left (vph)	4	39	27	2
Volume Right (vph)	65	2	28	5
Hadj (s)	-0.18	0.07	-0.01	-0.20
Departure Headway (s)	4.6	4.9	4.7	4.9
Degree Utilization, x	0.23	0.22	0.33	0.02
Capacity (veh/h)	729	693	718	657
Control Delay (s)	9.0	9.2	10.1	8.0
Approach Delay (s)	9.0	9.2	10.1	8.0
Approach LOS	A	A	B	A

Intersection Summary			
Delay	9.5		
HCM Level of Service	A		
Intersection Capacity Utilization	42.0%	ICU Level of Service	A
Analysis Period (min)	15		

HCM Unsignalized Intersection Capacity Analysis
1: SW 97th Ave. & SW 174th St.

2/18/2015

Movement	EBL	EBT	EBR	WBL	WBT	WBR	NBL	NBT	NBR	SBL	SBT	SBR
Lane Configurations												
Sign Control		Stop			Stop			Stop			Stop	
Volume (vph)	3	138	41	37	150	0	31	10	14	27	109	4
Peak Hour Factor	0.90	0.90	0.90	0.90	0.90	0.90	0.90	0.90	0.90	0.90	0.90	0.90
Hourly flow rate (vph)	3	153	46	41	167	0	34	11	16	30	121	4

Direction, Lane #	EB 1	WB 1	NB 1	SB 1
Volume Total (vph)	202	208	61	156
Volume Left (vph)	3	41	34	30
Volume Right (vph)	46	0	16	4
Hadj (s)	-0.10	0.07	-0.01	0.06
Departure Headway (s)	4.6	4.8	5.1	5.0
Degree Utilization, x	0.26	0.28	0.09	0.22
Capacity (veh/h)	728	708	633	656
Control Delay (s)	9.3	9.6	8.6	9.4
Approach Delay (s)	9.3	9.6	8.6	9.4
Approach LOS	A	A	A	A

Intersection Summary			
Delay	9.4		
HCM Level of Service	A		
Intersection Capacity Utilization	37.4%	ICU Level of Service	A
Analysis Period (min)	15		

Lane Group	EBL	NBT	SBT	NET
Lane Group Flow (vph)	134	342	162	2491
v/c Ratio	0.78	0.64	0.37	0.86
Control Delay	110.0	32.4	62.2	38.1
Queue Delay	0.0	0.0	0.0	0.0
Total Delay	110.0	32.4	62.2	38.1
Queue Length 50th (ft)	162	166	168	930
Queue Length 95th (ft)	246	294	252	1028
Internal Link Dist (ft)	257	1041	665	1300
Turn Bay Length (ft)				
Base Capacity (vph)	209	538	441	2892
Starvation Cap Reductn	0	0	0	0
Spillback Cap Reductn	0	0	0	0
Storage Cap Reductn	0	0	0	0
Reduced v/c Ratio	0.64	0.64	0.37	0.86

Intersection Summary

Movement	EBL	EBR	NBL	NBT	NBR	SBT	SBR	NEL2	NEL	NET	NER
Lane Configurations											
Volume (vph)	4	125	8	8	313	130	26	4	21	2322	44
Ideal Flow (vphpl)	1900	1900	1900	1900	1900	1900	1900	1900	1900	1900	1900
Total Lost time (s)	5.0			5.0		5.0				5.0	
Lane Util. Factor	1.00			1.00		1.00				0.91	
Frt	0.87			0.87		0.98				1.00	
Flt Protected	1.00			1.00		1.00				1.00	
Satd. Flow (prot)	1616			1621		1821				5069	
Flt Permitted	1.00			0.99		1.00				1.00	
Satd. Flow (perm)	1616			1611		1821				5069	
Peak-hour factor, PHF	0.96	0.96	0.96	0.96	0.96	0.96	0.96	0.96	0.96	0.96	0.96
Adj. Flow (vph)	4	130	8	8	326	135	27	4	22	2419	46
RTOR Reduction (vph)	0	0	0	148	0	0	0	0	0	1	0
Lane Group Flow (vph)	134	0	0	194	0	162	0	0	0	2490	0
Parking (#/hr)		0									
Turn Type	NA		Perm	NA		NA		Perm	Perm	NA	
Protected Phases	3			4		8				6	
Permitted Phases			4					6	6		
Actuated Green, G (s)	19.8			45.0		45.0				106.1	
Effective Green, g (s)	19.8			45.0		45.0				106.1	
Actuated g/C Ratio	0.11			0.24		0.24				0.57	
Clearance Time (s)	5.0			5.0		5.0				5.0	
Vehicle Extension (s)	3.0			3.0		3.0				3.0	
Lane Grp Cap (vph)	172			390		441				2893	
v/s Ratio Prot	c0.08					0.09					
v/s Ratio Perm				c0.12						0.49	
v/c Ratio	0.78			0.50		0.37				0.86	
Uniform Delay, d1	80.9			60.7		58.6				33.7	
Progression Factor	1.00			1.00		1.00				1.00	
Incremental Delay, d2	19.7			4.5		2.4				3.6	
Delay (s)	100.6			65.2		61.0				37.3	
Level of Service	F			E		E				D	
Approach Delay (s)	100.6			65.2		61.0				37.3	
Approach LOS	F			E		E				D	

Intersection Summary			
HCM Average Control Delay	44.3	HCM Level of Service	D
HCM Volume to Capacity ratio	0.76		
Actuated Cycle Length (s)	185.9	Sum of lost time (s)	15.0
Intersection Capacity Utilization	94.0%	ICU Level of Service	F
Analysis Period (min)	15		

c Critical Lane Group

Movement	EBL	EBR	NBL	NBT	SBT	SBR
Lane Configurations						
Volume (veh/h)	47	86	21	263	173	75
Sign Control	Stop			Free	Free	
Grade	0%			0%	0%	
Peak Hour Factor	0.92	0.92	0.92	0.92	0.92	0.92
Hourly flow rate (vph)	51	93	23	286	188	82
Pedestrians						
Lane Width (ft)						
Walking Speed (ft/s)						
Percent Blockage						
Right turn flare (veh)						
Median type				None	None	
Median storage veh)						
Upstream signal (ft)					1121	
pX, platoon unblocked	1.00	1.00	1.00			
vC, conflicting volume	560	229	270			
vC1, stage 1 conf vol						
vC2, stage 2 conf vol						
vCu, unblocked vol	559	227	268			
tC, single (s)	6.4	6.2	4.1			
tC, 2 stage (s)						
tF (s)	3.5	3.3	2.2			
p0 queue free %	89	88	98			
cM capacity (veh/h)	481	811	1294			

Direction, Lane #	EB 1	NB 1	SB 1
Volume Total	145	309	270
Volume Left	51	23	0
Volume Right	93	0	82
cSH	653	1294	1700
Volume to Capacity	0.22	0.02	0.16
Queue Length 95th (ft)	21	1	0
Control Delay (s)	12.1	0.7	0.0
Lane LOS	B	A	
Approach Delay (s)	12.1	0.7	0.0
Approach LOS	B		

Intersection Summary			
Average Delay	2.7		
Intersection Capacity Utilization	45.7%	ICU Level of Service	A
Analysis Period (min)	15		

Movement	WBL	WBR	NBT	NBR	SBL	SBT
Lane Configurations						
Volume (veh/h)	140	57	227	38	33	178
Sign Control	Stop		Free			Free
Grade	0%		0%			0%
Peak Hour Factor	0.94	0.94	0.94	0.94	0.94	0.94
Hourly flow rate (vph)	149	61	241	40	35	189
Pedestrians			187			
Lane Width (ft)			12.0			
Walking Speed (ft/s)			4.0			
Percent Blockage			16			
Right turn flare (veh)						
Median type			None			None
Median storage veh)						
Upstream signal (ft)						
pX, platoon unblocked						
vC, conflicting volume	708	262			282	
vC1, stage 1 conf vol						
vC2, stage 2 conf vol						
vCu, unblocked vol	708	262			282	
tC, single (s)	6.4	6.2			4.1	
tC, 2 stage (s)						
tF (s)	3.5	3.3			2.2	
p0 queue free %	55	92			97	
cM capacity (veh/h)	329	777			1281	

Direction, Lane #	WB 1	NB 1	SB 1
Volume Total	210	282	224
Volume Left	149	0	35
Volume Right	61	40	0
cSH	395	1700	1281
Volume to Capacity	0.53	0.17	0.03
Queue Length 95th (ft)	75	0	2
Control Delay (s)	23.9	0.0	1.4
Lane LOS	C		A
Approach Delay (s)	23.9	0.0	1.4
Approach LOS	C		

Intersection Summary			
Average Delay	7.5		
Intersection Capacity Utilization	46.7%	ICU Level of Service	A
Analysis Period (min)	15		

Movement	EBL	EBR	NBL	NBT	SBT	SBR
Lane Configurations						
Volume (veh/h)	16	56	16	263	232	94
Sign Control	Stop			Free	Free	
Grade	0%			0%	0%	
Peak Hour Factor	0.93	0.93	0.93	0.93	0.93	0.93
Hourly flow rate (vph)	17	60	17	283	249	101
Pedestrians						
Lane Width (ft)						
Walking Speed (ft/s)						
Percent Blockage						
Right turn flare (veh)						
Median type				None	None	
Median storage veh)						
Upstream signal (ft)				1230		
pX, platoon unblocked						
vC, conflicting volume	617	300	351			
vC1, stage 1 conf vol						
vC2, stage 2 conf vol						
vCu, unblocked vol	617	300	351			
tC, single (s)	6.4	6.2	4.1			
tC, 2 stage (s)						
tF (s)	3.5	3.3	2.2			
p0 queue free %	96	92	99			
cM capacity (veh/h)	447	740	1208			

Direction, Lane #	EB 1	NB 1	SB 1
Volume Total	77	300	351
Volume Left	17	17	0
Volume Right	60	0	101
cSH	646	1208	1700
Volume to Capacity	0.12	0.01	0.21
Queue Length 95th (ft)	10	1	0
Control Delay (s)	11.3	0.6	0.0
Lane LOS	B	A	
Approach Delay (s)	11.3	0.6	0.0
Approach LOS	B		

Intersection Summary			
Average Delay	1.4		
Intersection Capacity Utilization	37.9%	ICU Level of Service	A
Analysis Period (min)	15		

Movement	EBL	EBT	EBR	WBL	WBT	WBR	NBL	NBT	NBR	SBL	SBT	SBR
Lane Configurations												
Volume (veh/h)	34	6	46	54	30	6	9	245	32	2	224	54
Sign Control		Stop			Stop			Free			Free	
Grade		0%			0%			0%			0%	
Peak Hour Factor	0.87	0.87	0.87	0.87	0.87	0.87	0.87	0.87	0.87	0.87	0.87	0.87
Hourly flow rate (vph)	39	7	53	62	34	7	10	282	37	2	257	62
Pedestrians												
Lane Width (ft)												
Walking Speed (ft/s)												
Percent Blockage												
Right turn flare (veh)												
Median type								None			None	
Median storage veh)												
Upstream signal (ft)								904				
pX, platoon unblocked	0.92	0.92		0.92	0.92	0.92				0.92		
vC, conflicting volume	638	632	289	670	645	300	320			318		
vC1, stage 1 conf vol												
vC2, stage 2 conf vol												
vCu, unblocked vol	559	552	289	594	566	190	320			210		
tC, single (s)	7.1	6.5	6.2	7.1	6.5	6.2	4.1			4.1		
tC, 2 stage (s)												
tF (s)	3.5	4.0	3.3	3.5	4.0	3.3	2.2			2.2		
p0 queue free %	89	98	93	82	91	99	99			100		
cM capacity (veh/h)	370	400	751	347	393	780	1240			1246		

Direction, Lane #	EB 1	WB 1	NB 1	SB 1
Volume Total	99	103	329	322
Volume Left	39	62	10	2
Volume Right	53	7	37	62
cSH	511	376	1240	1246
Volume to Capacity	0.19	0.28	0.01	0.00
Queue Length 95th (ft)	18	28	1	0
Control Delay (s)	13.7	18.2	0.3	0.1
Lane LOS	B	C	A	A
Approach Delay (s)	13.7	18.2	0.3	0.1
Approach LOS	B	C		

Intersection Summary			
Average Delay	3.9		
Intersection Capacity Utilization	35.3%	ICU Level of Service	A
Analysis Period (min)	15		

Movement	EBL	EBT	EBR	WBL	WBT	WBR	NBL	NBT	NBR	SBL	SBT	SBR
Lane Configurations												
Volume (veh/h)	7	3	4	19	0	0	4	284	10	1	311	6
Sign Control		Stop			Stop			Free			Free	
Grade		0%			0%			0%			0%	
Peak Hour Factor	0.91	0.91	0.91	0.91	0.91	0.91	0.91	0.91	0.91	0.91	0.91	0.91
Hourly flow rate (vph)	8	3	4	21	0	0	4	312	11	1	342	7
Pedestrians												
Lane Width (ft)												
Walking Speed (ft/s)												
Percent Blockage												
Right turn flare (veh)												
Median type								None			None	
Median storage veh)												
Upstream signal (ft)								601				
pX, platoon unblocked	0.87	0.87		0.87	0.87	0.87				0.87		
vC, conflicting volume	674	679	345	680	677	318	348			323		
vC1, stage 1 conf vol												
vC2, stage 2 conf vol												
vCu, unblocked vol	553	560	345	560	557	145	348			152		
tC, single (s)	7.1	6.5	6.2	7.1	6.5	6.2	4.1			4.1		
tC, 2 stage (s)												
tF (s)	3.5	4.0	3.3	3.5	4.0	3.3	2.2			2.2		
p0 queue free %	98	99	99	94	100	100	100			100		
cM capacity (veh/h)	386	380	698	377	381	787	1211			1247		

Direction, Lane #	EB 1	WB 1	NB 1	SB 1
Volume Total	15	21	327	349
Volume Left	8	21	4	1
Volume Right	4	0	11	7
cSH	441	377	1211	1247
Volume to Capacity	0.03	0.06	0.00	0.00
Queue Length 95th (ft)	3	4	0	0
Control Delay (s)	13.5	15.1	0.1	0.0
Lane LOS	B	C	A	A
Approach Delay (s)	13.5	15.1	0.1	0.0
Approach LOS	B	C		

Intersection Summary			
Average Delay	0.8		
Intersection Capacity Utilization	28.5%	ICU Level of Service	A
Analysis Period (min)	15		

Movement	EBL	EBT	EBR	WBL	WBT	WBR	NBL	NBT	NBR	SBL	SBT	SBR
Lane Configurations												
Volume (veh/h)	11	1	79	3	11	1	13	289	6	1	291	39
Sign Control		Stop			Stop			Free			Free	
Grade		0%			0%			0%			0%	
Peak Hour Factor	0.93	0.93	0.93	0.93	0.93	0.93	0.93	0.93	0.93	0.93	0.93	0.93
Hourly flow rate (vph)	12	1	85	3	12	1	14	311	6	1	313	42
Pedestrians												
Lane Width (ft)												
Walking Speed (ft/s)												
Percent Blockage												
Right turn flare (veh)												
Median type								None			None	
Median storage veh)												
Upstream signal (ft)								300				
pX, platoon unblocked	0.83	0.83		0.83	0.83	0.83				0.83		
vC, conflicting volume	685	681	334	763	699	314	355			317		
vC1, stage 1 conf vol												
vC2, stage 2 conf vol												
vCu, unblocked vol	522	517	334	616	539	77	355			80		
tC, single (s)	7.1	6.5	6.2	7.1	6.5	6.2	4.1			4.1		
tC, 2 stage (s)												
tF (s)	3.5	4.0	3.3	3.5	4.0	3.3	2.2			2.2		
p0 queue free %	97	100	88	99	97	100	99			100		
cM capacity (veh/h)	374	380	708	292	370	820	1204			1264		

Direction, Lane #	EB 1	WB 1	NB 1	SB 1
Volume Total	98	16	331	356
Volume Left	12	3	14	1
Volume Right	85	1	6	42
cSH	634	364	1204	1264
Volume to Capacity	0.15	0.04	0.01	0.00
Queue Length 95th (ft)	14	3	1	0
Control Delay (s)	11.7	15.4	0.4	0.0
Lane LOS	B	C	A	A
Approach Delay (s)	11.7	15.4	0.4	0.0
Approach LOS	B	C		

Intersection Summary			
Average Delay	1.9		
Intersection Capacity Utilization	38.5%	ICU Level of Service	A
Analysis Period (min)	15		

Lane Group	EBL	EBT	EBR	WBL	WBT	NBL	NBT	SBL	SBT
Lane Group Flow (vph)	125	613	193	467	633	168	493	32	379
v/c Ratio	0.19	0.91	0.34	0.90	0.48	0.60	0.80	0.13	0.69
Control Delay	10.7	66.7	22.2	52.5	39.9	57.0	58.8	46.9	71.1
Queue Delay	0.0	0.0	0.0	0.0	0.0	0.0	0.0	0.0	0.0
Total Delay	10.7	66.7	22.2	52.5	39.9	57.0	58.8	46.9	71.1
Queue Length 50th (ft)	46	557	73	343	271	146	198	26	206
Queue Length 95th (ft)	71	#862	153	486	356	233	#311	59	282
Internal Link Dist (ft)		1915			531		229		156
Turn Bay Length (ft)	130			95		155		130	
Base Capacity (vph)	727	757	631	617	1487	274	622	248	559
Starvation Cap Reductn	0	0	0	0	0	0	0	0	0
Spillback Cap Reductn	0	0	0	0	0	0	0	0	0
Storage Cap Reductn	0	0	0	0	0	0	0	0	0
Reduced v/c Ratio	0.17	0.81	0.31	0.76	0.43	0.61	0.79	0.13	0.68

Intersection Summary

95th percentile volume exceeds capacity, queue may be longer.
Queue shown is maximum after two cycles.

Movement	EBL	EBT	EBR	WBL	WBT	WBR	NBL	NBT	NBR	SBL	SBT	SBR
Lane Configurations												
Volume (vph)	115	564	178	430	569	14	155	219	235	29	301	48
Ideal Flow (vphpl)	1900	1900	1900	1900	1900	1900	1900	1900	1900	1900	1900	1900
Total Lost time (s)	3.0	3.0	5.0	3.0	3.0		3.0	3.0		3.0	3.0	
Lane Util. Factor	1.00	1.00	1.00	1.00	0.95		1.00	0.95		1.00	0.95	
Frt	1.00	1.00	0.85	1.00	1.00		1.00	0.92		1.00	0.98	
Flt Protected	0.95	1.00	1.00	0.95	1.00		0.95	1.00		0.95	1.00	
Satd. Flow (prot)	1770	1863	1583	1770	3527		1770	3265		1770	3466	
Flt Permitted	0.31	1.00	1.00	0.14	1.00		0.30	1.00		0.32	1.00	
Satd. Flow (perm)	582	1863	1583	258	3527		568	3265		604	3466	
Peak-hour factor, PHF	0.92	0.92	0.92	0.92	0.92	0.92	0.92	0.92	0.92	0.92	0.92	0.92
Adj. Flow (vph)	125	613	193	467	618	15	168	238	255	32	327	52
RTOR Reduction (vph)	0	0	69	0	1	0	0	109	0	0	7	0
Lane Group Flow (vph)	125	613	124	467	632	0	168	384	0	32	372	0
Turn Type	pm+pt	NA	custom	pm+pt	NA		custom	NA		custom	NA	
Protected Phases	1 2	2 4		1 3	3 4		5 6	6 8		5 7	7 8	
Permitted Phases	2 4		4	3 4			8			8		
Actuated Green, G (s)	92.9	55.7	49.9	89.2	58.0		36.1	22.1		31.8	23.8	
Effective Green, g (s)	92.9	55.7	49.9	89.2	58.0		36.1	22.1		31.8	23.8	
Actuated g/C Ratio	0.58	0.35	0.31	0.56	0.36		0.23	0.14		0.20	0.15	
Clearance Time (s)			5.0									
Vehicle Extension (s)			3.0									
Lane Grp Cap (vph)	658	649	494	516	1279		272	451		228	516	
v/s Ratio Prot	0.05	c0.33		c0.22	0.18		c0.07	c0.12		0.01	c0.11	
v/s Ratio Perm	0.06		0.08	0.28			0.07			0.01		
v/c Ratio	0.19	0.94	0.25	0.91	0.49		0.62	0.85		0.14	0.72	
Uniform Delay, d1	15.6	50.6	41.0	41.6	39.6		53.1	67.3		52.3	64.9	
Progression Factor	1.00	1.00	1.00	1.00	1.00		1.00	1.00		1.00	1.00	
Incremental Delay, d2	0.1	22.5	0.3	19.3	0.3		4.1	14.4		0.3	4.9	
Delay (s)	15.8	73.1	41.3	60.9	39.9		57.3	81.7		52.6	69.8	
Level of Service	B	E	D	E	D		E	F		D	E	
Approach Delay (s)		58.8			48.8			75.5			68.5	
Approach LOS		E			D			E			E	

Intersection Summary			
HCM Average Control Delay	60.1	HCM Level of Service	E
HCM Volume to Capacity ratio	0.85		
Actuated Cycle Length (s)	159.9	Sum of lost time (s)	21.0
Intersection Capacity Utilization	85.3%	ICU Level of Service	E
Analysis Period (min)	15		
c Critical Lane Group			

Movement	EBL	EBT	WBT	WBR	SBL	SBR
Lane Configurations						
Volume (veh/h)	319	657	803	22	43	228
Sign Control		Free	Free		Stop	
Grade		0%	0%		0%	
Peak Hour Factor	0.96	0.96	0.96	0.96	0.96	0.96
Hourly flow rate (vph)	332	684	836	23	45	238
Pedestrians					805	
Lane Width (ft)					12.0	
Walking Speed (ft/s)					4.0	
Percent Blockage					67	
Right turn flare (veh)						
Median type		None	None			
Median storage veh)						
Upstream signal (ft)		611				
pX, platoon unblocked					0.72	
vC, conflicting volume	1664				3002	1653
vC1, stage 1 conf vol						
vC2, stage 2 conf vol						
vCu, unblocked vol	1664				3579	1653
tC, single (s)	4.1				6.4	6.2
tC, 2 stage (s)						
tF (s)	2.2				3.5	3.3
p0 queue free %	0				0	0
cM capacity (veh/h)	127				0	40

Direction, Lane #	EB 1	EB 2	WB 1	SB 1
Volume Total	332	684	859	282
Volume Left	332	0	0	45
Volume Right	0	0	23	238
cSH	127	1700	1700	0
Volume to Capacity	2.61	0.40	0.51	Err
Queue Length 95th (ft)	746	0	0	Err
Control Delay (s)	802.6	0.0	0.0	Err
Lane LOS	F			F
Approach Delay (s)	262.3		0.0	Err
Approach LOS				F

Intersection Summary			
Average Delay	Err		
Intersection Capacity Utilization	88.0%	ICU Level of Service	E
Analysis Period (min)	15		

Lane Group	EBL	EBT	WBL	WBT	NBL	NBT	SBL	SBT
Lane Group Flow (vph)	238	648	284	590	88	1971	232	2758
v/c Ratio	0.80	1.09	1.01	1.01	0.92	0.89	0.94	1.04
Control Delay	95.6	134.8	132.0	115.6	107.4	53.2	100.5	70.6
Queue Delay	0.0	0.0	0.0	0.0	0.0	0.0	0.0	0.0
Total Delay	95.6	134.8	132.0	115.6	107.4	53.2	100.5	70.6
Queue Length 50th (ft)	290	~476	~409	~423	59	814	237	~1347
Queue Length 95th (ft)	#424	#612	#639	#564	#187	879	#413	#1408
Internal Link Dist (ft)		364		1915		469		768
Turn Bay Length (ft)			286		160		130	
Base Capacity (vph)	298	592	280	583	96	2217	255	2660
Starvation Cap Reductn	0	0	0	0	0	0	0	0
Spillback Cap Reductn	0	0	0	0	0	0	0	0
Storage Cap Reductn	0	0	0	0	0	0	0	0
Reduced v/c Ratio	0.80	1.09	1.01	1.01	0.92	0.89	0.91	1.04

Intersection Summary

~ Volume exceeds capacity, queue is theoretically infinite.
Queue shown is maximum after two cycles.

95th percentile volume exceeds capacity, queue may be longer.
Queue shown is maximum after two cycles.

Movement	EBL	EBT	EBR	WBL	WBT	WBR	NBL	NBT	NBR	SBL	SBT	SBR
Lane Configurations												
Volume (vph)	219	540	56	363	429	12	81	1384	430	213	2206	331
Ideal Flow (vphpl)	1900	1900	1900	1900	1900	1900	1900	1900	1900	1900	1900	1900
Total Lost time (s)	5.0	5.0		5.0	5.0		3.0	5.0		3.0	5.0	
Lane Util. Factor	1.00	0.95		0.91	0.91		1.00	0.91		1.00	0.91	
Frt	1.00	0.99		1.00	1.00		1.00	0.96		1.00	0.98	
Flt Protected	0.95	1.00		0.95	0.99		0.95	1.00		0.95	1.00	
Satd. Flow (prot)	1770	3489		1610	3348		1770	4905		1770	4986	
Flt Permitted	0.95	1.00		0.95	0.99		0.05	1.00		0.05	1.00	
Satd. Flow (perm)	1770	3489		1610	3348		88	4905		85	4986	
Peak-hour factor, PHF	0.92	0.92	0.92	0.92	0.92	0.92	0.92	0.92	0.92	0.92	0.92	0.92
Adj. Flow (vph)	238	587	61	395	466	13	88	1504	467	232	2398	360
RTOR Reduction (vph)	0	4	0	0	1	0	0	29	0	0	10	0
Lane Group Flow (vph)	238	644	0	284	589	0	88	1942	0	232	2748	0
Turn Type	Split	NA		Split	NA		pm+pt	NA		pm+pt	NA	
Protected Phases	4	4		8	8		5	2		1	6	
Permitted Phases							2			6		
Actuated Green, G (s)	32.0	32.0		33.0	33.0		90.8	84.8		110.0	101.0	
Effective Green, g (s)	32.0	32.0		33.0	33.0		90.8	84.8		110.0	101.0	
Actuated g/C Ratio	0.17	0.17		0.17	0.17		0.48	0.45		0.58	0.53	
Clearance Time (s)	5.0	5.0		5.0	5.0		3.0	5.0		3.0	5.0	
Vehicle Extension (s)	3.0	3.0		3.0	3.0		3.0	3.0		3.0	3.0	
Lane Grp Cap (vph)	298	588		280	581		95	2189		246	2650	
v/s Ratio Prot	0.13	c0.18		c0.18	0.18		0.03	0.40		c0.11	c0.55	
v/s Ratio Perm							0.41			0.44		
v/c Ratio	0.80	1.09		1.01	1.01		0.93	0.89		0.94	1.04	
Uniform Delay, d1	75.9	79.0		78.5	78.5		45.4	48.2		66.2	44.5	
Progression Factor	1.00	1.00		1.00	1.00		1.00	1.00		1.00	1.00	
Incremental Delay, d2	13.8	65.7		57.5	40.9		68.0	5.8		41.7	27.9	
Delay (s)	89.7	144.7		136.0	119.4		113.4	54.0		108.0	72.4	
Level of Service	F	F		F	F		F	D		F	E	
Approach Delay (s)		129.9			124.8			56.5			75.2	
Approach LOS		F			F			E			E	

Intersection Summary			
HCM Average Control Delay	83.0	HCM Level of Service	F
HCM Volume to Capacity ratio	1.02		
Actuated Cycle Length (s)	190.0	Sum of lost time (s)	13.0
Intersection Capacity Utilization	102.2%	ICU Level of Service	G
Analysis Period (min)	15		
c Critical Lane Group			

Movement	EBL	EBT	EBR	WBL	WBT	WBR	NBL	NBT	NBR	SBL	SBT	SBR
Lane Configurations												
Volume (vph)	219	540	56	363	429	12	81	1384	430	213	2206	331
Movement Number	7	4	14	3	8	18	5	2	12	1	6	16
Initial Queue, veh	0	0	0	0	0	0	0	0	0	0	0	0
Ped-Bike Adj. Factor (A_pbT)	1.00		1.00	1.00		1.00	1.00		1.00	1.00		1.00
Parking, Bus Adj. Factors	1.00	1.00	1.00	1.00	1.00	1.00	1.00	1.00	1.00	1.00	1.00	1.00
Adj. Sat. Flow Rate, veh/h/ln	1863	1863	1863	1863	1863	1863	1863	1863	1863	1863	1863	1863
Lanes	1	2	0	1	2	0	1	3	0	1	3	0
Lane Assignment												
Capacity, veh/h	299	559	58	308	626	18	95	1762	541	249	2387	345
Proportion Arriving On Green	0.17	0.17	0.17	0.17	0.17	0.17	0.03	0.46	0.46	0.11	0.53	0.53
Movement Delay, s/veh	89.8	142.8	144.8	227.4	83.4	83.7	116.3	52.1	58.9	97.2	63.4	85.9
Movement LOS	F	F	F	F	F	F	F	D	E	F	E	F
Approach Volume, veh/h		886			874			2060			2989	
Approach Delay, s/veh		129.3			148.5			57.0			73.3	
Approach LOS		F			F			E			E	

Timer:	1	2	3	4	5	6	7	8
Assigned Phase	1	2	8	4	5	6		
Case No	1.1	4.0	10.0	10.0	1.1	4.0		
Phase Duration (G+Y+Rc), s	23.24	91.76	38.00	37.00	9.00	106.00		
Change Period (Y+Rc), s	3.00	5.00	5.00	5.00	3.00	5.00		
Max. Allowable Headway (MAH), s	4.00	3.97	3.95	3.95	4.00	3.97		
Maximum Green Setting (Gmax), s	23.00	84.00	33.00	32.00	6.00	101.00		
Max. Queue Clearance Time (g_c+I1), s	20.03	69.29	35.00	34.00	7.22	103.00		
Green Extension Time (g_e), s	0.21	14.03	0.00	0.00	0.00	0.00		
Probability of Phase Call (p_c)	1.000	1.000	1.000	1.000	0.990	1.000		
Probability of Max Out (p_x)	1.000	0.962	1.000	1.000	1.000	1.000		

Left-Turn Movement Data					
Assigned Movement	1		3	7	5
Mvmt. Sat Flow, veh/h	1774.04		1774.04	1774.04	1774.04

Through Movement Data					
Assigned Movement		2	8	4	6
Mvmt. Sat Flow, veh/h		3859.38	3606.94	3321.12	4489.54

Right-Turn Movement Data					
Assigned Movement		12	18	14	16
Mvmt. Sat Flow, veh/h		1184.52	100.77	343.71	648.89

Left Lane Group Data								
Assigned Movement	1	0	3	7	5	0	0	0
Lane Assignment	L (Pr/Pm)		L	LL (Pr/Pm)				
Lanes in Group	1	0	1	1	1	0	0	0
Group Volume (v), veh/h	231.5	0.0	394.6	238.0	88.0	0.0	0.0	0.0
Group Sat. Flow (s), veh/h/ln	1774.0	0.0	1774.0	1774.0	1774.0	0.0	0.0	0.0
Queue Serve Time (g_s), s	18.0	0.0	33.0	24.5	5.2	0.0	0.0	0.0
Cycle Queue Clear Time (g_c), s	18.0	0.0	33.0	24.5	5.2	0.0	0.0	0.0

Perm LT Sat Flow Rate (s_l), veh/h/ln	220.4	0.0	1774.0	1774.0	101.0	0.0	0.0	0.0
Shared LT Sat Flow (s_sh), veh/h/ln	0.0	0.0	0.0	0.0	0.0	0.0	0.0	0.0
Perm LT Eff. Green (g_p), s	103.0	0.0	0.0	0.0	86.8	0.0	0.0	0.0
Perm LT Serve Time (g_u), s	19.5	0.0	0.0	0.0	2.0	0.0	0.0	0.0
Perm LT Que Serve Time (g_ps), s	19.5	0.0	0.0	0.0	2.0	0.0	0.0	0.0
Time to First Blk (g_f), s	0.0	0.0	0.0	0.0	0.0	0.0	0.0	0.0
Serve Time pre Blk (g_fs), s	0.0	0.0	0.0	0.0	0.0	0.0	0.0	0.0
Proportion LT Inside Lane (P_L)	1.000	0.000	1.000	1.000	1.000	0.000	0.000	0.000
Lane Group Capacity (c), veh/h	249.5	0.0	308.1	298.8	95.0	0.0	0.0	0.0
Volume-to-Capacity Ratio (X)	0.928	0.000	1.281	0.797	0.927	0.000	0.000	0.000
Available Capacity (c_a), veh/h	275.2	0.0	308.1	298.8	95.0	0.0	0.0	0.0
Upstream Filter Factor (I)	1.000	0.000	1.000	1.000	1.000	0.000	0.000	0.000
Uniform Delay (d1), s/veh	63.1	0.0	78.5	75.9	47.4	0.0	0.0	0.0
Incremental Delay (d2), s/veh	34.1	0.0	148.9	14.0	68.8	0.0	0.0	0.0
Initial Queue Delay (d3), s/veh	0.0	0.0	0.0	0.0	0.0	0.0	0.0	0.0
Control Delay (d), s/veh	97.2	0.0	227.4	89.8	116.3	0.0	0.0	0.0
First-Term Queue (Q1), veh/ln	8.1	0.0	15.2	11.3	2.3	0.0	0.0	0.0
Second-Term Queue (Q2), veh/ln	2.4	0.0	12.7	1.2	1.8	0.0	0.0	0.0
Third-Term Queue (Q3), veh/ln	0.0	0.0	0.0	0.0	0.0	0.0	0.0	0.0
Percentile bk-of-que factor (f_B%)	1.000	0.000	1.000	1.000	1.000	0.000	0.000	0.000
Percentile Back of Queue (Q%), veh/ln	10.5	0.0	27.9	12.4	4.1	0.0	0.0	0.0
Percentile Storage Ratio (RQ%)	2.05	0.00	2.48	0.92	0.65	0.00	0.00	0.00
Initial Queue (Qb), veh	0.0	0.0	0.0	0.0	0.0	0.0	0.0	0.0
Final (Residual) Queue (Qe), veh	0.0	0.0	21.6	0.0	0.0	0.0	0.0	0.0
Saturated Delay (ds), s/veh	0.0	0.0	0.0	0.0	0.0	0.0	0.0	0.0
Saturated Queue (Qs), veh	0.0	0.0	0.0	0.0	0.0	0.0	0.0	0.0
Saturated Capacity (cs), veh/h	0.0	0.0	0.0	0.0	0.0	0.0	0.0	0.0
Initial Queue Clear Time (tc), h	0.0	0.0	0.3	0.0	0.0	0.0	0.0	0.0
Middle Lane Group Data								
Assigned Movement	0	2	8	4	0	6	0	0
Lane Assignment		T	T	T		T		
Lanes in Group	0	2	1	1	0	2	0	0
Group Volume (v), veh/h	0.0	1319.2	240.5	328.7	0.0	1788.3	0.0	0.0
Group Sat. Flow (s), veh/h/ln	0.0	1695.1	1862.7	1862.7	0.0	1695.1	0.0	0.0
Queue Serve Time (g_s), s	0.0	65.8	23.3	32.0	0.0	99.4	0.0	0.0
Cycle Queue Clear Time (g_c), s	0.0	65.8	23.3	32.0	0.0	99.4	0.0	0.0
Lane Group Capacity (c), veh/h	0.0	1548.1	323.5	313.7	0.0	1802.2	0.0	0.0
Volume-to-Capacity Ratio (X)	0.000	0.852	0.743	1.048	0.000	0.992	0.000	0.000
Available Capacity (c_a), veh/h	0.0	1548.1	323.5	313.7	0.0	1802.2	0.0	0.0
Upstream Filter Factor (I)	0.000	1.000	1.000	1.000	0.000	1.000	0.000	0.000
Uniform Delay (d1), s/veh	0.0	45.9	74.5	79.0	0.0	44.1	0.0	0.0
Incremental Delay (d2), s/veh	0.0	6.1	8.9	63.8	0.0	19.3	0.0	0.0
Initial Queue Delay (d3), s/veh	0.0	0.0	0.0	0.0	0.0	0.0	0.0	0.0
Control Delay (d), s/veh	0.0	52.1	83.4	142.8	0.0	63.4	0.0	0.0
First-Term Queue (Q1), veh/ln	0.0	27.9	11.2	15.5	0.0	41.3	0.0	0.0
Second-Term Queue (Q2), veh/ln	0.0	1.3	0.8	5.6	0.0	4.8	0.0	0.0
Third-Term Queue (Q3), veh/ln	0.0	0.0	0.0	0.0	0.0	0.0	0.0	0.0
Percentile bk-of-que factor (f_B%)	0.000	1.000	1.000	1.000	0.000	1.000	0.000	0.000
Percentile Back of Queue (Q%), veh/ln	0.0	29.2	12.1	21.0	0.0	46.2	0.0	0.0
Percentile Storage Ratio (RQ%)	0.00	1.62	0.16	1.55	0.00	1.60	0.00	0.00

Initial Queue (Qb), veh	0.0	0.0	0.0	0.0	0.0	0.0	0.0	0.0
Final (Residual) Queue (Qe), veh	0.0	0.0	0.0	3.7	0.0	0.0	0.0	0.0
Saturated Delay (ds), s/veh	0.0	0.0	0.0	0.0	0.0	0.0	0.0	0.0
Saturated Queue (Qs), veh	0.0	0.0	0.0	0.0	0.0	0.0	0.0	0.0
Saturated Capacity (cs), veh/h	0.0	0.0	0.0	0.0	0.0	0.0	0.0	0.0
Initial Queue Clear Time (tc), h	0.0	0.0	0.0	0.3	0.0	0.0	0.0	0.0

Right Lane Group Data								
Assigned Movement	0	12	18	14	0	16	0	0
Lane Assignment		T+R	T+R	T+R		T+R		
Lanes in Group	0	1	1	1	0	1	0	0
Group Volume (v), veh/h	0.0	652.5	238.8	319.1	0.0	969.3	0.0	0.0
Group Sat. Flow (s), veh/h/ln	0.0	1653.7	1845.0	1802.1	0.0	1748.2	0.0	0.0
Queue Serve Time (g_s), s	0.0	67.3	23.3	32.0	0.0	101.0	0.0	0.0
Cycle Queue Clear Time (g_c), s	0.0	67.3	23.3	32.0	0.0	101.0	0.0	0.0
Prot RT Sat Flow Rate (s_R), veh/h/ln	0.0	0.0	0.0	0.0	0.0	0.0	0.0	0.0
Prot RT Eff. Green (g_R), s	0.0	0.0	0.0	0.0	0.0	0.0	0.0	0.0
Proportion RT Outside Lane (P_R)	0.000	0.716	0.055	0.191	0.000	0.371	0.000	0.000
Lane Group Capacity (c), veh/h	0.0	755.1	320.4	303.5	0.0	929.3	0.0	0.0
Volume-to-Capacity Ratio (X)	0.000	0.864	0.745	1.052	0.000	1.043	0.000	0.000
Available Capacity (c_a), veh/h	0.0	755.1	320.4	303.5	0.0	929.3	0.0	0.0
Upstream Filter Factor (I)	0.000	1.000	1.000	1.000	0.000	1.000	0.000	0.000
Uniform Delay (d1), s/veh	0.0	46.3	74.5	79.0	0.0	44.5	0.0	0.0
Incremental Delay (d2), s/veh	0.0	12.6	9.1	65.8	0.0	41.4	0.0	0.0
Initial Queue Delay (d3), s/veh	0.0	0.0	0.0	0.0	0.0	0.0	0.0	0.0
Control Delay (d), s/veh	0.0	58.9	83.7	144.8	0.0	85.9	0.0	0.0
First-Term Queue (Q1), veh/ln	0.0	27.8	11.2	15.0	0.0	43.3	0.0	0.0
Second-Term Queue (Q2), veh/ln	0.0	2.6	0.8	5.5	0.0	10.7	0.0	0.0
Third-Term Queue (Q3), veh/ln	0.0	0.0	0.0	0.0	0.0	0.0	0.0	0.0
Percentile bk-of-que factor (f_B%)	0.000	1.000	1.000	1.000	0.000	1.000	0.000	0.000
Percentile Back of Queue (Q%), veh/ln	0.0	30.4	12.0	20.5	0.0	54.0	0.0	0.0
Percentile Storage Ratio (RQ%)	0.00	1.69	0.16	1.51	0.00	1.87	0.00	0.00
Initial Queue (Qb), veh	0.0	0.0	0.0	0.0	0.0	0.0	0.0	0.0
Final (Residual) Queue (Qe), veh	0.0	0.0	0.0	3.9	0.0	10.0	0.0	0.0
Saturated Delay (ds), s/veh	0.0	0.0	0.0	0.0	0.0	0.0	0.0	0.0
Saturated Queue (Qs), veh	0.0	0.0	0.0	0.0	0.0	0.0	0.0	0.0
Saturated Capacity (cs), veh/h	0.0	0.0	0.0	0.0	0.0	0.0	0.0	0.0
Initial Queue Clear Time (tc), h	0.0	0.0	0.0	0.3	0.0	0.3	0.0	0.0

Intersection Summary	
HCM Average Control Delay	85.3
HCM Level of Service	F

Movement	EBL	EBT	EBR	WBL	WBT	WBR	NEL	NET	NER	SWL	SWT	SWR
Lane Configurations												
Volume (veh/h)	30	23	0	0	33	16	40	1895	33	0	0	0
Sign Control		Stop			Stop			Free			Free	
Grade		0%			0%			0%			0%	
Peak Hour Factor	0.93	0.93	0.93	0.93	0.93	0.93	0.93	0.93	0.93	0.93	0.93	0.93
Hourly flow rate (vph)	32	25	0	0	35	17	43	2038	35	0	0	0
Pedestrians												
Lane Width (ft)												
Walking Speed (ft/s)												
Percent Blockage												
Right turn flare (veh)												
Median type								None			None	
Median storage veh)												
Upstream signal (ft)												
pX, platoon unblocked												
vC, conflicting volume	800	2159	0	2154	2141	697	0			2073		
vC1, stage 1 conf vol												
vC2, stage 2 conf vol												
vCu, unblocked vol	800	2159	0	2154	2141	697	0			2073		
tC, single (s)	7.5	6.5	6.9	7.5	6.5	6.9	4.1			4.1		
tC, 2 stage (s)												
tF (s)	3.5	4.0	3.3	3.5	4.0	3.3	2.2			2.2		
p0 queue free %	67	46	100	100	24	96	97			100		
cM capacity (veh/h)	98	46	1084	15	47	384	1622			265		

Direction, Lane #	EB 1	WB 1	NE 1	NE 2	NE 3
Volume Total	57	53	552	1019	545
Volume Left	32	0	43	0	0
Volume Right	0	17	0	0	35
cSH	66	66	1622	1700	1700
Volume to Capacity	0.87	0.80	0.03	0.60	0.32
Queue Length 95th (ft)	103	93	2	0	0
Control Delay (s)	180.0	162.5	0.8	0.0	0.0
Lane LOS	F	F	A		
Approach Delay (s)	180.0	162.5	0.2		
Approach LOS	F	F			

Intersection Summary			
Average Delay	8.7		
Intersection Capacity Utilization	54.4%	ICU Level of Service	A
Analysis Period (min)	15		

Movement	EBL	EBT	EBR	WBL	WBT	WBR	NEL	NET	NER	SWL	SWT	SWR
Lane Configurations												
Volume (veh/h)	0	27	0	0	90	0	1	2013	16	0	0	0
Sign Control		Stop			Stop			Free			Free	
Grade		0%			0%			0%			0%	
Peak Hour Factor	0.91	0.91	0.91	0.91	0.91	0.91	0.91	0.91	0.91	0.91	0.91	0.91
Hourly flow rate (vph)	0	30	0	0	99	0	1	2212	18	0	0	0
Pedestrians												
Lane Width (ft)												
Walking Speed (ft/s)												
Percent Blockage												
Right turn flare (veh)												
Median type								None			None	
Median storage veh)												
Upstream signal (ft)												
pX, platoon unblocked												
vC, conflicting volume	789	2232	0	2238	2223	746	0			2230		
vC1, stage 1 conf vol												
vC2, stage 2 conf vol												
vCu, unblocked vol	789	2232	0	2238	2223	746	0			2230		
tC, single (s)	7.5	6.5	6.9	7.5	6.5	6.9	4.1			4.1		
tC, 2 stage (s)												
tF (s)	3.5	4.0	3.3	3.5	4.0	3.3	2.2			2.2		
p0 queue free %	0	30	100	100	0	100	100			100		
cM capacity (veh/h)	0	42	1084	10	43	356	1622			230		

Direction, Lane #	EB 1	WB 1	NE 1	NE 2	NE 3
Volume Total	30	99	554	1106	571
Volume Left	0	0	1	0	0
Volume Right	0	0	0	0	18
cSH	42	43	1622	1700	1700
Volume to Capacity	0.70	2.32	0.00	0.65	0.34
Queue Length 95th (ft)	66	264	0	0	0
Control Delay (s)	201.1	804.0	0.0	0.0	0.0
Lane LOS	F	F	A		
Approach Delay (s)	201.1	804.0	0.0		
Approach LOS	F	F			

Intersection Summary			
Average Delay	36.2		
Intersection Capacity Utilization	50.7%	ICU Level of Service	A
Analysis Period (min)	15		

Movement	EBL	EBR	NBL	NBT	SBT	SBR
Lane Configurations						
Volume (veh/h)	1	1	6	283	237	2
Sign Control	Stop			Free	Free	
Grade	0%			0%	0%	
Peak Hour Factor	0.92	0.92	0.92	0.92	0.92	0.92
Hourly flow rate (vph)	1	1	7	308	258	2
Pedestrians						
Lane Width (ft)						
Walking Speed (ft/s)						
Percent Blockage						
Right turn flare (veh)						
Median type				None	None	
Median storage veh)						
Upstream signal (ft)						
pX, platoon unblocked						
vC, conflicting volume	579	259	260			
vC1, stage 1 conf vol						
vC2, stage 2 conf vol						
vCu, unblocked vol	579	259	260			
tC, single (s)	6.4	6.2	4.1			
tC, 2 stage (s)						
tF (s)	3.5	3.3	2.2			
p0 queue free %	100	100	100			
cM capacity (veh/h)	475	780	1305			

Direction, Lane #	EB 1	NB 1	SB 1
Volume Total	2	314	260
Volume Left	1	7	0
Volume Right	1	0	2
cSH	590	1305	1700
Volume to Capacity	0.00	0.00	0.15
Queue Length 95th (ft)	0	0	0
Control Delay (s)	11.1	0.2	0.0
Lane LOS	B	A	
Approach Delay (s)	11.1	0.2	0.0
Approach LOS	B		

Intersection Summary			
Average Delay	0.2		
Intersection Capacity Utilization	29.7%	ICU Level of Service	A
Analysis Period (min)	15		

Movement	EBL	EBR	NBL	NBT	SBT	SBR
Lane Configurations						
Volume (veh/h)	8	2	9	279	244	239
Sign Control	Stop			Free	Free	
Grade	0%			0%	0%	
Peak Hour Factor	0.92	0.92	0.92	0.92	0.92	0.92
Hourly flow rate (vph)	9	2	10	303	265	260
Pedestrians						
Lane Width (ft)						
Walking Speed (ft/s)						
Percent Blockage						
Right turn flare (veh)						
Median type				None	None	
Median storage veh)						
Upstream signal (ft)						
pX, platoon unblocked						
vC, conflicting volume	718	395	525			
vC1, stage 1 conf vol						
vC2, stage 2 conf vol						
vCu, unblocked vol	718	395	525			
tC, single (s)	6.4	6.2	4.1			
tC, 2 stage (s)						
tF (s)	3.5	3.3	2.2			
p0 queue free %	98	100	99			
cM capacity (veh/h)	392	654	1042			

Direction, Lane #	EB 1	NB 1	SB 1
Volume Total	11	313	525
Volume Left	9	10	0
Volume Right	2	0	260
cSH	426	1042	1700
Volume to Capacity	0.03	0.01	0.31
Queue Length 95th (ft)	2	1	0
Control Delay (s)	13.7	0.4	0.0
Lane LOS	B	A	
Approach Delay (s)	13.7	0.4	0.0
Approach LOS	B		

Intersection Summary			
Average Delay	0.3		
Intersection Capacity Utilization	37.5%	ICU Level of Service	A
Analysis Period (min)	15		

Movement	EBL	EBR	NBL	NBT	SBT	SBR
Lane Configurations						
Volume (veh/h)	20	18	29	250	200	2
Sign Control	Stop			Free	Free	
Grade	0%			0%	0%	
Peak Hour Factor	0.92	0.92	0.92	0.92	0.92	0.92
Hourly flow rate (vph)	22	20	32	272	217	2
Pedestrians						
Lane Width (ft)						
Walking Speed (ft/s)						
Percent Blockage						
Right turn flare (veh)						
Median type				None	None	
Median storage veh)						
Upstream signal (ft)						
pX, platoon unblocked						
vC, conflicting volume	553	218	220			
vC1, stage 1 conf vol						
vC2, stage 2 conf vol						
vCu, unblocked vol	553	218	220			
tC, single (s)	6.4	6.2	4.1			
tC, 2 stage (s)						
tF (s)	3.5	3.3	2.2			
p0 queue free %	95	98	98			
cM capacity (veh/h)	482	821	1350			

Direction, Lane #	EB 1	NB 1	SB 1
Volume Total	41	303	220
Volume Left	22	32	0
Volume Right	20	0	2
cSH	600	1350	1700
Volume to Capacity	0.07	0.02	0.13
Queue Length 95th (ft)	6	2	0
Control Delay (s)	11.4	1.0	0.0
Lane LOS	B	A	
Approach Delay (s)	11.4	1.0	0.0
Approach LOS	B		

Intersection Summary			
Average Delay	1.4		
Intersection Capacity Utilization	38.7%	ICU Level of Service	A
Analysis Period (min)	15		

Movement	EBL	EBR	NBL	NBT	SBT	SBR
Lane Configurations						
Volume (veh/h)	28	30	39	206	133	33
Sign Control	Stop			Free	Free	
Grade	0%			0%	0%	
Peak Hour Factor	0.92	0.92	0.92	0.92	0.92	0.92
Hourly flow rate (vph)	30	33	42	224	145	36
Pedestrians						
Lane Width (ft)						
Walking Speed (ft/s)						
Percent Blockage						
Right turn flare (veh)						
Median type				None	None	
Median storage veh)						
Upstream signal (ft)						
pX, platoon unblocked						
vC, conflicting volume	471	162	180			
vC1, stage 1 conf vol						
vC2, stage 2 conf vol						
vCu, unblocked vol	471	162	180			
tC, single (s)	6.4	6.2	4.1			
tC, 2 stage (s)						
tF (s)	3.5	3.3	2.2			
p0 queue free %	94	96	97			
cM capacity (veh/h)	534	882	1395			

Direction, Lane #	EB 1	NB 1	SB 1
Volume Total	63	266	180
Volume Left	30	42	0
Volume Right	33	0	36
cSH	671	1395	1700
Volume to Capacity	0.09	0.03	0.11
Queue Length 95th (ft)	8	2	0
Control Delay (s)	10.9	1.4	0.0
Lane LOS	B	A	
Approach Delay (s)	10.9	1.4	0.0
Approach LOS	B		

Intersection Summary			
Average Delay	2.1		
Intersection Capacity Utilization	35.4%	ICU Level of Service	A
Analysis Period (min)	15		

Movement	EBL	EBT	EBR	WBL	WBT	WBR	NBL	NBT	NBR	SBL	SBT	SBR
Lane Configurations												
Sign Control		Stop			Stop			Stop			Stop	
Volume (vph)	3	109	67	40	152	1	31	203	26	2	1	4
Peak Hour Factor	0.92	0.92	0.92	0.92	0.92	0.92	0.92	0.92	0.92	0.92	0.92	0.92
Hourly flow rate (vph)	3	118	73	43	165	1	34	221	28	2	1	4

Direction, Lane #	EB 1	WB 1	NB 1	SB 1
Volume Total (vph)	195	210	283	8
Volume Left (vph)	3	43	34	2
Volume Right (vph)	73	1	28	4
Hadj (s)	-0.19	0.07	0.00	-0.25
Departure Headway (s)	4.8	5.0	4.9	5.1
Degree Utilization, x	0.26	0.29	0.39	0.01
Capacity (veh/h)	703	678	693	619
Control Delay (s)	9.4	10.0	11.0	8.1
Approach Delay (s)	9.4	10.0	11.0	8.1
Approach LOS	A	B	B	A

Intersection Summary			
Delay	10.2		
HCM Level of Service	B		
Intersection Capacity Utilization	45.6%	ICU Level of Service	A
Analysis Period (min)	15		

HCM Unsignalized Intersection Capacity Analysis
1: SW 97th Ave. & SW 174th St.

2/18/2015

Movement	EBL	EBT	EBR	WBL	WBT	WBR	NBL	NBT	NBR	SBL	SBT	SBR
Lane Configurations												
Sign Control		Stop			Stop			Stop			Stop	
Volume (vph)	4	145	30	53	197	0	25	24	12	89	210	8
Peak Hour Factor	0.84	0.84	0.84	0.84	0.84	0.84	0.84	0.84	0.84	0.84	0.84	0.84
Hourly flow rate (vph)	5	173	36	63	235	0	30	29	14	106	250	10

Direction, Lane #	EB 1	WB 1	NB 1	SB 1
Volume Total (vph)	213	298	73	365
Volume Left (vph)	5	63	30	106
Volume Right (vph)	36	0	14	10
Hadj (s)	-0.06	0.08	0.00	0.08
Departure Headway (s)	5.7	5.7	6.1	5.6
Degree Utilization, x	0.34	0.47	0.12	0.57
Capacity (veh/h)	579	596	498	609
Control Delay (s)	11.5	13.5	9.9	15.6
Approach Delay (s)	11.5	13.5	9.9	15.6
Approach LOS	B	B	A	C

Intersection Summary			
Delay	13.6		
HCM Level of Service	B		
Intersection Capacity Utilization	52.1%	ICU Level of Service	A
Analysis Period (min)	15		

Lane Group	EBL	NBT	SBT	NET
Lane Group Flow (vph)	114	554	263	4566
v/c Ratio	1.19	1.51	0.76	1.36
Control Delay	213.7	279.4	80.0	192.7
Queue Delay	0.0	0.0	0.0	0.0
Total Delay	213.7	279.4	80.0	192.7
Queue Length 50th (ft)	~152	~795	281	~2442
Queue Length 95th (ft)	#268	#938	361	#2188
Internal Link Dist (ft)	257	1041	665	1300
Turn Bay Length (ft)				
Base Capacity (vph)	96	368	345	3350
Starvation Cap Reductn	0	0	0	0
Spillback Cap Reductn	0	0	0	0
Storage Cap Reductn	0	0	0	0
Reduced v/c Ratio	1.19	1.51	0.76	1.36

Intersection Summary

~ Volume exceeds capacity, queue is theoretically infinite.
Queue shown is maximum after two cycles.

95th percentile volume exceeds capacity, queue may be longer.
Queue shown is maximum after two cycles.

Movement	EBL	EBR	NBL	NBT	NBR	SBL	SBT	NEL2	NEL	NET	NER
Lane Configurations											
Volume (vph)	12	84	4	27	434	4	217	1	2	3826	7
Ideal Flow (vphpl)	1900	1900	1900	1900	1900	1900	1900	1900	1900	1900	1900
Total Lost time (s)	5.0			5.0			5.0			5.0	
Lane Util. Factor	1.00			1.00			1.00			0.91	
Frt	0.88			0.87			1.00			1.00	
Flt Protected	0.99			1.00			1.00			1.00	
Satd. Flow (prot)	1632			1627			1861			5084	
Flt Permitted	0.99			1.00			0.95			1.00	
Satd. Flow (perm)	1632			1623			1776			5084	
Peak-hour factor, PHF	0.84	0.84	0.84	0.84	0.84	0.84	0.84	0.84	0.84	0.84	0.84
Adj. Flow (vph)	14	100	5	32	517	5	258	1	2	4555	8
RTOR Reduction (vph)	0	0	0	53	0	0	0	0	0	0	0
Lane Group Flow (vph)	114	0	0	501	0	0	263	0	0	4566	0
Turn Type	NA		Perm	NA		Perm	NA	Perm	Perm	NA	
Protected Phases	3			4			8			6	
Permitted Phases			4			8		6	6		
Actuated Green, G (s)	10.0			33.0			33.0			112.0	
Effective Green, g (s)	10.0			33.0			33.0			112.0	
Actuated g/C Ratio	0.06			0.19			0.19			0.66	
Clearance Time (s)	5.0			5.0			5.0			5.0	
Vehicle Extension (s)	3.0			3.0			3.0			3.0	
Lane Grp Cap (vph)	96			315			345			3349	
v/s Ratio Prot	c0.07										
v/s Ratio Perm				c0.31			0.15			0.90	
v/c Ratio	1.19			1.59			0.76			1.36	
Uniform Delay, d1	80.0			68.5			64.8			29.0	
Progression Factor	1.00			1.00			1.00			1.00	
Incremental Delay, d2	150.8			280.0			14.7			165.5	
Delay (s)	230.8			348.5			79.5			194.5	
Level of Service	F			F			E			F	
Approach Delay (s)	230.8			348.5			79.5			194.5	
Approach LOS	F			F			E			F	

Intersection Summary			
HCM Average Control Delay	205.3	HCM Level of Service	F
HCM Volume to Capacity ratio	1.40		
Actuated Cycle Length (s)	170.0	Sum of lost time (s)	15.0
Intersection Capacity Utilization	123.1%	ICU Level of Service	H
Analysis Period (min)	15		
c Critical Lane Group			

Movement	EBL	EBR	NBL	NBT	SBT	SBR
Lane Configurations						
Volume (veh/h)	55	38	42	469	197	59
Sign Control	Stop			Free	Free	
Grade	0%			0%	0%	
Peak Hour Factor	0.90	0.90	0.90	0.90	0.90	0.90
Hourly flow rate (vph)	61	42	47	521	219	66
Pedestrians	236					
Lane Width (ft)	12.0					
Walking Speed (ft/s)	4.0					
Percent Blockage	20					
Right turn flare (veh)						
Median type				None	None	
Median storage veh)						
Upstream signal (ft)					1121	
pX, platoon unblocked	0.92	0.92	0.92			
vC, conflicting volume	1102	488	520			
vC1, stage 1 conf vol						
vC2, stage 2 conf vol						
vCu, unblocked vol	1067	398	433			
tC, single (s)	6.4	6.2	4.1			
tC, 2 stage (s)						
tF (s)	3.5	3.3	2.2			
p0 queue free %	64	91	94			
cM capacity (veh/h)	171	481	831			

Direction, Lane #	EB 1	NB 1	SB 1
Volume Total	103	568	284
Volume Left	61	47	0
Volume Right	42	0	66
cSH	232	831	1700
Volume to Capacity	0.44	0.06	0.17
Queue Length 95th (ft)	53	4	0
Control Delay (s)	32.3	1.5	0.0
Lane LOS	D	A	
Approach Delay (s)	32.3	1.5	0.0
Approach LOS	D		

Intersection Summary			
Average Delay	4.4		
Intersection Capacity Utilization	58.2%	ICU Level of Service	B
Analysis Period (min)	15		

Movement	WBL	WBR	NBT	NBR	SBL	SBT
Lane Configurations						
Volume (veh/h)	66	49	463	36	23	189
Sign Control	Stop		Free			Free
Grade	0%		0%			0%
Peak Hour Factor	0.89	0.89	0.89	0.89	0.89	0.89
Hourly flow rate (vph)	74	55	520	40	26	212
Pedestrians			85			
Lane Width (ft)			12.0			
Walking Speed (ft/s)			4.0			
Percent Blockage			7			
Right turn flare (veh)						
Median type			None			None
Median storage veh)						
Upstream signal (ft)						
pX, platoon unblocked						
vC, conflicting volume	889	540			561	
vC1, stage 1 conf vol						
vC2, stage 2 conf vol						
vCu, unblocked vol	889	540			561	
tC, single (s)	6.4	6.2			4.1	
tC, 2 stage (s)						
tF (s)	3.5	3.3			2.2	
p0 queue free %	74	90			97	
cM capacity (veh/h)	284	541			1010	

Direction, Lane #	WB 1	NB 1	SB 1
Volume Total	129	561	238
Volume Left	74	0	26
Volume Right	55	40	0
cSH	356	1700	1010
Volume to Capacity	0.36	0.33	0.03
Queue Length 95th (ft)	40	0	2
Control Delay (s)	20.8	0.0	1.2
Lane LOS	C		A
Approach Delay (s)	20.8	0.0	1.2
Approach LOS	C		

Intersection Summary			
Average Delay	3.2		
Intersection Capacity Utilization	42.5%	ICU Level of Service	A
Analysis Period (min)	15		

Movement	EBL	EBR	NBL	NBT	SBT	SBR
Lane Configurations						
Volume (veh/h)	36	28	23	488	213	41
Sign Control	Stop			Free	Free	
Grade	0%			0%	0%	
Peak Hour Factor	0.95	0.95	0.95	0.95	0.95	0.95
Hourly flow rate (vph)	38	29	24	514	224	43
Pedestrians						
Lane Width (ft)						
Walking Speed (ft/s)						
Percent Blockage						
Right turn flare (veh)						
Median type				None	None	
Median storage veh)						
Upstream signal (ft)				1230		
pX, platoon unblocked	0.91					
vC, conflicting volume	808	246	267			
vC1, stage 1 conf vol						
vC2, stage 2 conf vol						
vCu, unblocked vol	741	246	267			
tC, single (s)	6.4	6.2	4.1			
tC, 2 stage (s)						
tF (s)	3.5	3.3	2.2			
p0 queue free %	89	96	98			
cM capacity (veh/h)	343	793	1296			

Direction, Lane #	EB 1	NB 1	SB 1
Volume Total	67	538	267
Volume Left	38	24	0
Volume Right	29	0	43
cSH	457	1296	1700
Volume to Capacity	0.15	0.02	0.16
Queue Length 95th (ft)	13	1	0
Control Delay (s)	14.2	0.6	0.0
Lane LOS	B	A	
Approach Delay (s)	14.2	0.6	0.0
Approach LOS	B		

Intersection Summary			
Average Delay	1.4		
Intersection Capacity Utilization	54.4%	ICU Level of Service	A
Analysis Period (min)	15		

Movement	EBL	EBT	EBR	WBL	WBT	WBR	NBL	NBT	NBR	SBL	SBT	SBR
Lane Configurations												
Volume (veh/h)	76	12	15	42	22	17	17	421	12	4	200	33
Sign Control		Stop			Stop			Free			Free	
Grade		0%			0%			0%			0%	
Peak Hour Factor	0.93	0.93	0.93	0.93	0.93	0.93	0.93	0.93	0.93	0.93	0.93	0.93
Hourly flow rate (vph)	82	13	16	45	24	18	18	453	13	4	215	35
Pedestrians												
Lane Width (ft)												
Walking Speed (ft/s)												
Percent Blockage												
Right turn flare (veh)												
Median type								None			None	
Median storage veh)												
Upstream signal (ft)								904				
pX, platoon unblocked	0.86	0.86		0.86	0.86	0.86				0.86		
vC, conflicting volume	767	744	233	760	755	459	251			466		
vC1, stage 1 conf vol												
vC2, stage 2 conf vol												
vCu, unblocked vol	647	619	233	638	633	288	251			296		
tC, single (s)	7.1	6.5	6.2	7.1	6.5	6.2	4.1			4.1		
tC, 2 stage (s)												
tF (s)	3.5	4.0	3.3	3.5	4.0	3.3	2.2			2.2		
p0 queue free %	73	96	98	86	93	97	99			100		
cM capacity (veh/h)	299	341	806	314	335	645	1315			1087		

Direction, Lane #	EB 1	WB 1	NB 1	SB 1
Volume Total	111	87	484	255
Volume Left	82	45	18	4
Volume Right	16	18	13	35
cSH	335	359	1315	1087
Volume to Capacity	0.33	0.24	0.01	0.00
Queue Length 95th (ft)	35	23	1	0
Control Delay (s)	21.0	18.2	0.4	0.2
Lane LOS	C	C	A	A
Approach Delay (s)	21.0	18.2	0.4	0.2
Approach LOS	C	C		

Intersection Summary			
Average Delay	4.5		
Intersection Capacity Utilization	47.2%	ICU Level of Service	A
Analysis Period (min)	15		

Movement	EBL	EBT	EBR	WBL	WBT	WBR	NBL	NBT	NBR	SBL	SBT	SBR
Lane Configurations												
Volume (veh/h)	16	12	4	15	5	2	4	433	14	0	243	10
Sign Control		Stop			Stop			Free			Free	
Grade		0%			0%			0%			0%	
Peak Hour Factor	0.91	0.91	0.91	0.91	0.91	0.91	0.91	0.91	0.91	0.91	0.91	0.91
Hourly flow rate (vph)	18	13	4	16	5	2	4	476	15	0	267	11
Pedestrians												
Lane Width (ft)												
Walking Speed (ft/s)												
Percent Blockage												
Right turn flare (veh)												
Median type								None			None	
Median storage veh)												
Upstream signal (ft)								601				
pX, platoon unblocked	0.83	0.83		0.83	0.83	0.83				0.83		
vC, conflicting volume	770	773	273	776	770	484	278			491		
vC1, stage 1 conf vol												
vC2, stage 2 conf vol												
vCu, unblocked vol	623	626	273	630	623	279	278			288		
tC, single (s)	7.1	6.5	6.2	7.1	6.5	6.2	4.1			4.1		
tC, 2 stage (s)												
tF (s)	3.5	4.0	3.3	3.5	4.0	3.3	2.2			2.2		
p0 queue free %	95	96	99	95	98	100	100			100		
cM capacity (veh/h)	326	332	766	316	334	633	1285			1060		

Direction, Lane #	EB 1	WB 1	NB 1	SB 1
Volume Total	35	24	496	278
Volume Left	18	16	4	0
Volume Right	4	2	15	11
cSH	354	335	1285	1060
Volume to Capacity	0.10	0.07	0.00	0.00
Queue Length 95th (ft)	8	6	0	0
Control Delay (s)	16.3	16.6	0.1	0.0
Lane LOS	C	C	A	
Approach Delay (s)	16.3	16.6	0.1	0.0
Approach LOS	C	C		

Intersection Summary			
Average Delay	1.2		
Intersection Capacity Utilization	36.8%	ICU Level of Service	A
Analysis Period (min)	15		

Movement	EBL	EBT	EBR	WBL	WBT	WBR	NBL	NBT	NBR	SBL	SBT	SBR
Lane Configurations												
Volume (veh/h)	17	36	52	9	38	2	27	423	19	15	180	73
Sign Control		Stop			Stop			Free			Free	
Grade		0%			0%			0%			0%	
Peak Hour Factor	0.94	0.94	0.94	0.94	0.94	0.94	0.94	0.94	0.94	0.94	0.94	0.94
Hourly flow rate (vph)	18	38	55	10	40	2	29	450	20	16	191	78
Pedestrians												
Lane Width (ft)												
Walking Speed (ft/s)												
Percent Blockage												
Right turn flare (veh)												
Median type								None			None	
Median storage veh)												
Upstream signal (ft)								300				
pX, platoon unblocked	0.78	0.78		0.78	0.78	0.78				0.78		
vC, conflicting volume	802	790	230	854	819	460	269			470		
vC1, stage 1 conf vol												
vC2, stage 2 conf vol												
vCu, unblocked vol	604	589	230	671	625	165	269			178		
tC, single (s)	7.1	6.5	6.2	7.1	6.5	6.2	4.1			4.1		
tC, 2 stage (s)												
tF (s)	3.5	4.0	3.3	3.5	4.0	3.3	2.2			2.2		
p0 queue free %	93	88	93	96	87	100	98			99		
cM capacity (veh/h)	278	316	809	237	301	685	1294			1089		

Direction, Lane #	EB 1	WB 1	NB 1	SB 1
Volume Total	112	52	499	285
Volume Left	18	10	29	16
Volume Right	55	2	20	78
cSH	439	293	1294	1089
Volume to Capacity	0.25	0.18	0.02	0.01
Queue Length 95th (ft)	25	16	2	1
Control Delay (s)	16.0	19.9	0.7	0.6
Lane LOS	C	C	A	A
Approach Delay (s)	16.0	19.9	0.7	0.6
Approach LOS	C	C		

Intersection Summary			
Average Delay	3.5		
Intersection Capacity Utilization	46.5%	ICU Level of Service	A
Analysis Period (min)	15		

Lane Group	EBL	EBT	EBR	WBL	WBT	NBL	NBT	SBL	SBT
Lane Group Flow (vph)	123	520	137	166	697	365	740	23	207
v/c Ratio	0.34	0.90	0.30	0.56	0.60	0.63	0.86	0.06	0.28
Control Delay	19.9	55.1	11.8	27.1	34.1	27.1	44.4	18.0	35.8
Queue Delay	0.0	0.0	0.0	0.0	0.0	0.0	0.0	0.0	0.0
Total Delay	19.9	55.1	11.8	27.1	34.1	27.1	44.4	18.0	35.8
Queue Length 50th (ft)	51	321	14	70	227	178	206	9	62
Queue Length 95th (ft)	87	#522	67	114	298	267	#340	24	98
Internal Link Dist (ft)		1915			531		229		156
Turn Bay Length (ft)	130			95		155		130	
Base Capacity (vph)	411	606	485	296	1204	581	871	418	747
Starvation Cap Reductn	0	0	0	0	0	0	0	0	0
Spillback Cap Reductn	0	0	0	0	0	0	0	0	0
Storage Cap Reductn	0	0	0	0	0	0	0	0	0
Reduced v/c Ratio	0.30	0.86	0.28	0.56	0.58	0.63	0.85	0.06	0.28

Intersection Summary

95th percentile volume exceeds capacity, queue may be longer.
Queue shown is maximum after two cycles.

Movement	EBL	EBT	EBR	WBL	WBT	WBR	NBL	NBT	NBR	SBL	SBT	SBR
Lane Configurations												
Volume (vph)	117	494	130	158	600	62	347	392	311	22	169	28
Ideal Flow (vphpl)	1900	1900	1900	1900	1900	1900	1900	1900	1900	1900	1900	1900
Total Lost time (s)	3.0	3.0	5.0	3.0	3.0		3.0	3.0		3.0	3.0	
Lane Util. Factor	1.00	1.00	1.00	1.00	0.95		1.00	0.95		1.00	0.95	
Frt	1.00	1.00	0.85	1.00	0.99		1.00	0.93		1.00	0.98	
Flt Protected	0.95	1.00	1.00	0.95	1.00		0.95	1.00		0.95	1.00	
Satd. Flow (prot)	1770	1863	1583	1770	3490		1770	3305		1770	3465	
Flt Permitted	0.26	1.00	1.00	0.25	1.00		0.62	1.00		0.24	1.00	
Satd. Flow (perm)	479	1863	1583	469	3490		1159	3305		449	3465	
Peak-hour factor, PHF	0.95	0.95	0.95	0.95	0.95	0.95	0.95	0.95	0.95	0.95	0.95	0.95
Adj. Flow (vph)	123	520	137	166	632	65	365	413	327	23	178	29
RTOR Reduction (vph)	0	0	86	0	6	0	0	121	0	0	11	0
Lane Group Flow (vph)	123	520	51	166	691	0	365	619	0	23	196	0
Turn Type	custom	NA	custom	custom	NA		custom	NA		custom	NA	
Protected Phases	1 2	2 4		1 3	3 4		5 6	6 8		5 7	7 8	
Permitted Phases	4		4	4			8			8		
Actuated Green, G (s)	41.6	32.6	26.6	37.6	34.6		40.9	21.6		35.7	22.4	
Effective Green, g (s)	41.6	32.6	26.6	37.6	34.6		40.9	21.6		35.7	22.4	
Actuated g/C Ratio	0.37	0.29	0.24	0.33	0.31		0.36	0.19		0.32	0.20	
Clearance Time (s)			5.0									
Vehicle Extension (s)			3.0									
Lane Grp Cap (vph)	350	541	375	284	1075		554	636		367	691	
v/s Ratio Prot	0.05	c0.28		c0.06	c0.20		c0.14	c0.19		0.01	c0.06	
v/s Ratio Perm	0.08		0.03	0.14			0.10			0.01		
v/c Ratio	0.35	0.96	0.14	0.58	0.64		0.66	0.97		0.06	0.28	
Uniform Delay, d1	24.3	39.2	33.8	28.3	33.5		28.6	45.1		26.7	38.1	
Progression Factor	1.00	1.00	1.00	1.00	1.00		1.00	1.00		1.00	1.00	
Incremental Delay, d2	0.6	29.0	0.2	3.1	1.3		2.8	28.8		0.1	0.2	
Delay (s)	25.0	68.2	33.9	31.3	34.8		31.4	73.9		26.8	38.4	
Level of Service	C	E	C	C	C		C	E		C	D	
Approach Delay (s)		55.4			34.2			59.9			37.2	
Approach LOS		E			C			E			D	

Intersection Summary			
HCM Average Control Delay	49.5	HCM Level of Service	D
HCM Volume to Capacity ratio	0.78		
Actuated Cycle Length (s)	112.3	Sum of lost time (s)	21.0
Intersection Capacity Utilization	73.1%	ICU Level of Service	D
Analysis Period (min)	15		
c Critical Lane Group			

Movement	EBL	EBT	WBT	WBR	SBL	SBR
Lane Configurations						
Volume (veh/h)	356	594	781	62	52	87
Sign Control		Free	Free		Stop	
Grade		0%	0%		0%	
Peak Hour Factor	0.88	0.88	0.88	0.88	0.88	0.88
Hourly flow rate (vph)	405	675	888	70	59	99
Pedestrians					376	
Lane Width (ft)					12.0	
Walking Speed (ft/s)					4.0	
Percent Blockage					31	
Right turn flare (veh)						
Median type		None	None			
Median storage veh)						
Upstream signal (ft)		611				
pX, platoon unblocked					0.81	
vC, conflicting volume	1334				2783	1299
vC1, stage 1 conf vol						
vC2, stage 2 conf vol						
vCu, unblocked vol	1334				3085	1299
tC, single (s)	4.1				6.4	6.2
tC, 2 stage (s)						
tF (s)	2.2				3.5	3.3
p0 queue free %	0				0	27
cM capacity (veh/h)	355				0	136

Direction, Lane #	EB 1	EB 2	WB 1	SB 1
Volume Total	405	675	958	158
Volume Left	405	0	0	59
Volume Right	0	0	70	99
cSH	355	1700	1700	0
Volume to Capacity	1.14	0.40	0.56	Err
Queue Length 95th (ft)	395	0	0	Err
Control Delay (s)	125.0	0.0	0.0	Err
Lane LOS	F			F
Approach Delay (s)	46.9		0.0	Err
Approach LOS				F

Intersection Summary			
Average Delay	Err		
Intersection Capacity Utilization	82.8%	ICU Level of Service	E
Analysis Period (min)	15		

Lane Group	EBL	EBT	WBL	WBT	NBL	NBT	SBL	SBT
Lane Group Flow (vph)	771	929	208	861	71	3188	168	2434
v/c Ratio	1.30	0.78	0.81	1.61	0.72	1.72	1.57	1.31
Control Delay	191.2	56.6	92.8	325.2	69.3	360.5	323.1	185.6
Queue Delay	0.0	0.0	0.0	0.0	0.0	0.0	0.0	0.0
Total Delay	191.2	56.6	92.8	325.2	69.3	360.5	323.1	185.6
Queue Length 50th (ft)	~1094	492	249	~751	47	~1924	~213	~1270
Queue Length 95th (ft)	#1216	525	#350	#814	#94	#1795	#341	#1205
Internal Link Dist (ft)		364		1915		469		768
Turn Bay Length (ft)			286		160		130	
Base Capacity (vph)	593	1186	256	534	98	1850	107	1856
Starvation Cap Reductn	0	0	0	0	0	0	0	0
Spillback Cap Reductn	0	0	0	0	0	0	0	0
Storage Cap Reductn	0	0	0	0	0	0	0	0
Reduced v/c Ratio	1.30	0.78	0.81	1.61	0.72	1.72	1.57	1.31

Intersection Summary

~ Volume exceeds capacity, queue is theoretically infinite.
Queue shown is maximum after two cycles.

95th percentile volume exceeds capacity, queue may be longer.
Queue shown is maximum after two cycles.

Movement	EBL	EBT	EBR	WBL	WBT	WBR	NBL	NBT	NBR	SBL	SBT	SBR
Lane Configurations												
Volume (vph)	648	775	5	194	586	118	60	2620	58	141	1700	344
Ideal Flow (vphpl)	1900	1900	1900	1900	1900	1900	1900	1900	1900	1900	1900	1900
Total Lost time (s)	5.0	5.0		5.0	5.0		3.0	5.0		3.0	5.0	
Lane Util. Factor	1.00	0.95		0.91	0.91		1.00	0.91		1.00	0.91	
Frt	1.00	1.00		1.00	0.98		1.00	1.00		1.00	0.97	
Flt Protected	0.95	1.00		0.95	1.00		0.95	1.00		0.95	1.00	
Satd. Flow (prot)	1770	3536		1610	3303		1770	5069		1770	4957	
Flt Permitted	0.95	1.00		0.95	1.00		0.06	1.00		0.06	1.00	
Satd. Flow (perm)	1770	3536		1610	3303		120	5069		118	4957	
Peak-hour factor, PHF	0.84	0.84	0.84	0.84	0.84	0.84	0.84	0.84	0.84	0.84	0.84	0.84
Adj. Flow (vph)	771	923	6	231	698	140	71	3119	69	168	2024	410
RTOR Reduction (vph)	0	0	0	0	9	0	0	1	0	0	18	0
Lane Group Flow (vph)	771	929	0	208	852	0	71	3187	0	168	2416	0
Turn Type	Split	NA		Split	NA		pm+pt	NA		pm+pt	NA	
Protected Phases	4	4		8	8		5	2		1	6	
Permitted Phases							2			6		
Actuated Green, G (s)	57.0	57.0		27.0	27.0		67.0	62.0		69.0	63.0	
Effective Green, g (s)	57.0	57.0		27.0	27.0		67.0	62.0		69.0	63.0	
Actuated g/C Ratio	0.34	0.34		0.16	0.16		0.39	0.36		0.41	0.37	
Clearance Time (s)	5.0	5.0		5.0	5.0		3.0	5.0		3.0	5.0	
Vehicle Extension (s)	3.0	3.0		3.0	3.0		3.0	3.0		3.0	3.0	
Lane Grp Cap (vph)	593	1186		256	525		96	1849		106	1837	
v/s Ratio Prot	c0.44	0.26		0.13	c0.26		0.02	c0.63		c0.06	0.49	
v/s Ratio Perm							0.27			0.58		
v/c Ratio	1.30	0.78		0.81	1.62		0.74	1.72		1.58	1.32	
Uniform Delay, d1	56.5	50.9		69.1	71.5		42.8	54.0		45.3	53.5	
Progression Factor	1.00	1.00		1.00	1.00		1.00	1.00		1.00	1.00	
Incremental Delay, d2	147.1	3.5		17.6	288.7		25.5	327.9		303.2	145.8	
Delay (s)	203.6	54.4		86.6	360.2		68.3	381.9		348.4	199.3	
Level of Service	F	D		F	F		E	F		F	F	
Approach Delay (s)		122.1			307.0			375.0			208.9	
Approach LOS		F			F			F			F	

Intersection Summary			
HCM Average Control Delay	266.7	HCM Level of Service	F
HCM Volume to Capacity ratio	1.57		
Actuated Cycle Length (s)	170.0	Sum of lost time (s)	21.0
Intersection Capacity Utilization	128.5%	ICU Level of Service	H
Analysis Period (min)	15		
c Critical Lane Group			

Movement	EBL	EBT	EBR	WBL	WBT	WBR	NBL	NBT	NBR	SBL	SBT	SBR
Lane Configurations												
Volume (vph)	648	775	5	194	586	118	60	2620	58	141	1700	344
Movement Number	7	4	14	3	8	18	5	2	12	1	6	16
Initial Queue, veh	0	0	0	0	0	0	0	0	0	0	0	0
Ped-Bike Adj. Factor (A_pbT)	1.00		1.00	1.00		1.00	1.00		1.00	1.00		1.00
Parking, Bus Adj. Factors	1.00	1.00	1.00	1.00	1.00	1.00	1.00	1.00	1.00	1.00	1.00	1.00
Adj. Sat. Flow Rate, veh/h/ln	1863	1863	1863	1863	1863	1863	1863	1863	1863	1863	1863	1863
Lanes	1	2	0	1	2	0	1	3	0	1	3	0
Lane Assignment												
Capacity, veh/h	595	1240	8	282	478	96	96	1867	41	105	1581	311
Proportion Arriving On Green	0.34	0.34	0.34	0.16	0.16	0.16	0.03	0.36	0.36	0.04	0.37	0.37
Movement Delay, s/veh	202.2	54.9	54.9	86.3	295.2	296.9	70.1	356.5	367.4	355.1	181.7	207.2
Movement LOS	F	D	D	F	F	F	E	F	F	F	F	F
Approach Volume, veh/h		1700			1069			3260			2601	
Approach Delay, s/veh		121.7			250.7			354.0			201.1	
Approach LOS		F			F			F			F	

Timer:	1	2	3	4	5	6	7	8
Assigned Phase	1	2	8	4	5	6		
Case No	1.1	4.0	10.0	10.0	1.1	4.0		
Phase Duration (G+Y+Rc), s	9.00	67.00	32.00	62.00	8.00	68.00		
Change Period (Y+Rc), s	3.00	5.00	5.00	5.00	3.00	5.00		
Max. Allowable Headway (MAH), s	4.00	3.93	3.97	3.95	4.00	3.93		
Maximum Green Setting (Gmax), s	6.00	62.00	27.00	57.00	5.00	63.00		
Max. Queue Clearance Time (g_c+I1), s	8.00	64.00	29.00	59.00	6.32	65.00		
Green Extension Time (g_e), s	0.00	0.00	0.00	0.00	0.00	0.00		
Probability of Phase Call (p_c)	1.000	1.000	1.000	1.000	0.966	1.000		
Probability of Max Out (p_x)	1.000	1.000	1.000	1.000	1.000	1.000		

Left-Turn Movement Data					
Assigned Movement	1		3	7	5
Mvmt. Sat Flow, veh/h	1774.04		1774.04	1774.04	1774.04

Through Movement Data					
Assigned Movement		2	8	4	6
Mvmt. Sat Flow, veh/h		5120.52	3012.35	3697.43	4265.94

Right-Turn Movement Data					
Assigned Movement		12	18	14	16
Mvmt. Sat Flow, veh/h		112.55	606.17	23.85	838.95

Left Lane Group Data								
Assigned Movement	1	0	3	7	5	0	0	0
Lane Assignment	L (Pr/Pm)		L	LL (Pr/Pm)				
Lanes in Group	1	0	1	1	1	0	0	0
Group Volume (v), veh/h	167.9	0.0	231.0	771.4	71.4	0.0	0.0	0.0
Group Sat. Flow (s), veh/h/ln	1774.0	0.0	1774.0	1774.0	1774.0	0.0	0.0	0.0
Queue Serve Time (g_s), s	6.0	0.0	21.4	57.0	4.3	0.0	0.0	0.0
Cycle Queue Clear Time (g_c), s	6.0	0.0	21.4	57.0	4.3	0.0	0.0	0.0

Perm LT Sat Flow Rate (s_l), veh/h/ln	65.2	0.0	1774.0	1774.0	139.7	0.0	0.0	0.0
Shared LT Sat Flow (s_sh), veh/h/ln	0.0	0.0	0.0	0.0	0.0	0.0	0.0	0.0
Perm LT Eff. Green (g_p), s	63.0	0.0	0.0	0.0	62.0	0.0	0.0	0.0
Perm LT Serve Time (g_u), s	0.0	0.0	0.0	0.0	2.0	0.0	0.0	0.0
Perm LT Que Serve Time (g_ps), s	0.0	0.0	0.0	0.0	2.0	0.0	0.0	0.0
Time to First Blk (g_f), s	0.0	0.0	0.0	0.0	0.0	0.0	0.0	0.0
Serve Time pre Blk (g_fs), s	0.0	0.0	0.0	0.0	0.0	0.0	0.0	0.0
Proportion LT Inside Lane (P_L)	1.000	0.000	1.000	1.000	1.000	0.000	0.000	0.000
Lane Group Capacity (c), veh/h	105.0	0.0	281.8	594.8	96.2	0.0	0.0	0.0
Volume-to-Capacity Ratio (X)	1.599	0.000	0.820	1.297	0.743	0.000	0.000	0.000
Available Capacity (c_a), veh/h	105.0	0.0	281.8	594.8	96.2	0.0	0.0	0.0
Upstream Filter Factor (I)	1.000	0.000	1.000	1.000	1.000	0.000	0.000	0.000
Uniform Delay (d1), s/veh	45.6	0.0	69.1	56.5	43.8	0.0	0.0	0.0
Incremental Delay (d2), s/veh	309.5	0.0	17.2	145.7	26.3	0.0	0.0	0.0
Initial Queue Delay (d3), s/veh	0.0	0.0	0.0	0.0	0.0	0.0	0.0	0.0
Control Delay (d), s/veh	355.1	0.0	86.3	202.2	70.1	0.0	0.0	0.0
First-Term Queue (Q1), veh/ln	2.8	0.0	9.8	25.5	1.9	0.0	0.0	0.0
Second-Term Queue (Q2), veh/ln	9.0	0.0	1.3	24.1	0.7	0.0	0.0	0.0
Third-Term Queue (Q3), veh/ln	0.0	0.0	0.0	0.0	0.0	0.0	0.0	0.0
Percentile bk-of-que factor (f_B%)	1.000	0.000	1.000	1.000	1.000	0.000	0.000	0.000
Percentile Back of Queue (Q%), veh/ln	11.8	0.0	11.1	49.6	2.6	0.0	0.0	0.0
Percentile Storage Ratio (RQ%)	2.31	0.00	0.99	3.65	0.42	0.00	0.00	0.00
Initial Queue (Qb), veh	0.0	0.0	0.0	0.0	0.0	0.0	0.0	0.0
Final (Residual) Queue (Qe), veh	15.7	0.0	0.0	44.2	0.0	0.0	0.0	0.0
Saturated Delay (ds), s/veh	0.0	0.0	0.0	0.0	0.0	0.0	0.0	0.0
Saturated Queue (Qs), veh	0.0	0.0	0.0	0.0	0.0	0.0	0.0	0.0
Saturated Capacity (cs), veh/h	0.0	0.0	0.0	0.0	0.0	0.0	0.0	0.0
Initial Queue Clear Time (tc), h	0.4	0.0	0.0	0.3	0.0	0.0	0.0	0.0

Middle Lane Group Data								
Assigned Movement	0	2	8	4	0	6	0	0
Lane Assignment		T	T	T		T		
Lanes in Group	0	2	1	1	0	2	0	0
Group Volume (v), veh/h	0.0	2057.6	431.2	464.8	0.0	1596.3	0.0	0.0
Group Sat. Flow (s), veh/h/ln	0.0	1695.1	1862.7	1862.7	0.0	1695.1	0.0	0.0
Queue Serve Time (g_s), s	0.0	62.0	27.0	37.6	0.0	63.0	0.0	0.0
Cycle Queue Clear Time (g_c), s	0.0	62.0	27.0	37.6	0.0	63.0	0.0	0.0
Lane Group Capacity (c), veh/h	0.0	1236.4	295.8	624.6	0.0	1256.4	0.0	0.0
Volume-to-Capacity Ratio (X)	0.000	1.664	1.458	0.744	0.000	1.271	0.000	0.000
Available Capacity (c_a), veh/h	0.0	1236.4	295.8	624.6	0.0	1256.4	0.0	0.0
Upstream Filter Factor (I)	0.000	1.000	1.000	1.000	0.000	1.000	0.000	0.000
Uniform Delay (d1), s/veh	0.0	54.0	71.5	50.0	0.0	53.5	0.0	0.0
Incremental Delay (d2), s/veh	0.0	302.5	223.7	4.8	0.0	128.2	0.0	0.0
Initial Queue Delay (d3), s/veh	0.0	0.0	0.0	0.0	0.0	0.0	0.0	0.0
Control Delay (d), s/veh	0.0	356.5	295.2	54.9	0.0	181.7	0.0	0.0
First-Term Queue (Q1), veh/ln	0.0	26.4	13.0	17.7	0.0	26.8	0.0	0.0
Second-Term Queue (Q2), veh/ln	0.0	51.9	18.4	0.8	0.0	22.4	0.0	0.0
Third-Term Queue (Q3), veh/ln	0.0	0.0	0.0	0.0	0.0	0.0	0.0	0.0
Percentile bk-of-que factor (f_B%)	0.000	1.000	1.000	1.000	0.000	1.000	0.000	0.000
Percentile Back of Queue (Q%), veh/ln	0.0	78.3	31.3	18.5	0.0	49.1	0.0	0.0
Percentile Storage Ratio (RQ%)	0.00	4.35	0.43	1.36	0.00	1.70	0.00	0.00

Initial Queue (Qb), veh	0.0	0.0	0.0	0.0	0.0	0.0	0.0	0.0
Final (Residual) Queue (Qe), veh	0.0	205.3	33.8	0.0	0.0	85.0	0.0	0.0
Saturated Delay (ds), s/veh	0.0	0.0	0.0	0.0	0.0	0.0	0.0	0.0
Saturated Queue (Qs), veh	0.0	0.0	0.0	0.0	0.0	0.0	0.0	0.0
Saturated Capacity (cs), veh/h	0.0	0.0	0.0	0.0	0.0	0.0	0.0	0.0
Initial Queue Clear Time (tc), h	0.0	0.4	0.4	0.0	0.0	0.3	0.0	0.0
Right Lane Group Data								
Assigned Movement	0	12	18	14	0	16	0	0
Lane Assignment		T+R	T+R	T+R		T+R		
Lanes in Group	0	1	1	1	0	1	0	0
Group Volume (v), veh/h	0.0	1130.5	406.9	463.8	0.0	837.0	0.0	0.0
Group Sat. Flow (s), veh/h/ln	0.0	1842.9	1755.8	1858.5	0.0	1714.7	0.0	0.0
Queue Serve Time (g_s), s	0.0	62.0	27.0	37.6	0.0	63.0	0.0	0.0
Cycle Queue Clear Time (g_c), s	0.0	62.0	27.0	37.6	0.0	63.0	0.0	0.0
Prot RT Sat Flow Rate (s_R), veh/h/ln	0.0	0.0	0.0	0.0	0.0	0.0	0.0	0.0
Prot RT Eff. Green (g_R), s	0.0	0.0	0.0	0.0	0.0	0.0	0.0	0.0
Proportion RT Outside Lane (P_R)	0.000	0.061	0.345	0.013	0.000	0.489	0.000	0.000
Lane Group Capacity (c), veh/h	0.0	672.1	278.9	623.2	0.0	635.4	0.0	0.0
Volume-to-Capacity Ratio (X)	0.000	1.682	1.459	0.744	0.000	1.317	0.000	0.000
Available Capacity (c_a), veh/h	0.0	672.1	278.9	623.2	0.0	635.4	0.0	0.0
Upstream Filter Factor (I)	0.000	1.000	1.000	1.000	0.000	1.000	0.000	0.000
Uniform Delay (d1), s/veh	0.0	54.0	71.5	50.0	0.0	53.5	0.0	0.0
Incremental Delay (d2), s/veh	0.0	313.4	225.4	4.8	0.0	153.7	0.0	0.0
Initial Queue Delay (d3), s/veh	0.0	0.0	0.0	0.0	0.0	0.0	0.0	0.0
Control Delay (d), s/veh	0.0	367.4	296.9	54.9	0.0	207.2	0.0	0.0
First-Term Queue (Q1), veh/ln	0.0	28.7	12.2	17.6	0.0	27.1	0.0	0.0
Second-Term Queue (Q2), veh/ln	0.0	58.5	17.5	0.8	0.0	27.1	0.0	0.0
Third-Term Queue (Q3), veh/ln	0.0	0.0	0.0	0.0	0.0	0.0	0.0	0.0
Percentile bk-of-que factor (f_B%)	0.000	1.000	1.000	1.000	0.000	1.000	0.000	0.000
Percentile Back of Queue (Q%), veh/ln	0.0	87.2	29.7	18.5	0.0	54.2	0.0	0.0
Percentile Storage Ratio (RQ%)	0.00	4.85	0.41	1.36	0.00	1.88	0.00	0.00
Initial Queue (Qb), veh	0.0	0.0	0.0	0.0	0.0	0.0	0.0	0.0
Final (Residual) Queue (Qe), veh	0.0	114.6	32.0	0.0	0.0	50.4	0.0	0.0
Saturated Delay (ds), s/veh	0.0	0.0	0.0	0.0	0.0	0.0	0.0	0.0
Saturated Queue (Qs), veh	0.0	0.0	0.0	0.0	0.0	0.0	0.0	0.0
Saturated Capacity (cs), veh/h	0.0	0.0	0.0	0.0	0.0	0.0	0.0	0.0
Initial Queue Clear Time (tc), h	0.0	0.4	0.4	0.0	0.0	0.3	0.0	0.0
Intersection Summary								
HCM Average Control Delay		249.3						
HCM Level of Service		F						

Movement	EBL	EBT	EBR	WBL	WBT	WBR	NEL	NET	NER	SWL	SWT	SWR
Lane Configurations												
Volume (veh/h)	15	17	0	0	25	40	37	3530	40	0	0	0
Sign Control		Stop			Stop			Free			Free	
Grade		0%			0%			0%			0%	
Peak Hour Factor	0.96	0.96	0.96	0.96	0.96	0.96	0.96	0.96	0.96	0.96	0.96	0.96
Hourly flow rate (vph)	16	18	0	0	26	42	39	3677	42	0	0	0
Pedestrians								34				
Lane Width (ft)								12.0				
Walking Speed (ft/s)								4.0				
Percent Blockage								3				
Right turn flare (veh)												
Median type								None			None	
Median storage veh)												
Upstream signal (ft)												
pX, platoon unblocked												
vC, conflicting volume	1357	3796	34	3818	3775	1247	0			3719		
vC1, stage 1 conf vol												
vC2, stage 2 conf vol												
vCu, unblocked vol	1357	3796	34	3818	3775	1247	0			3719		
tC, single (s)	7.5	6.5	6.9	7.5	6.5	6.9	4.1			4.1		
tC, 2 stage (s)												
tF (s)	3.5	4.0	3.3	3.5	4.0	3.3	2.2			2.2		
p0 queue free %	0	0	100	0	0	75	98			100		
cM capacity (veh/h)	0	4	1002	0	4	165	1622			57		

Direction, Lane #	EB 1	WB 1	NE 1	NE 2	NE 3
Volume Total	33	68	958	1839	961
Volume Left	16	0	39	0	0
Volume Right	0	42	0	0	42
cSH	0	10	1622	1700	1700
Volume to Capacity	Err	6.88	0.02	1.08	0.57
Queue Length 95th (ft)	Err	Err	2	0	0
Control Delay (s)	Err	Err	0.7	0.0	0.0
Lane LOS	F	F	A		
Approach Delay (s)	Err	Err	0.2		
Approach LOS	F	F			

Intersection Summary			
Average Delay	Err		
Intersection Capacity Utilization	84.9%	ICU Level of Service	E
Analysis Period (min)	15		

Movement	EBL	EBT	EBR	WBL	WBT	WBR	NEL	NET	NER	SWL	SWT	SWR
Lane Configurations												
Volume (veh/h)	9	24	0	0	59	24	17	3540	56	0	0	0
Sign Control		Stop			Stop			Free			Free	
Grade		0%			0%			0%			0%	
Peak Hour Factor	0.93	0.93	0.93	0.93	0.93	0.93	0.93	0.93	0.93	0.93	0.93	0.93
Hourly flow rate (vph)	10	26	0	0	63	26	18	3806	60	0	0	0
Pedestrians												
Lane Width (ft)												
Walking Speed (ft/s)												
Percent Blockage												
Right turn flare (veh)												
Median type								None			None	
Median storage veh)												
Upstream signal (ft)												
pX, platoon unblocked												
vC, conflicting volume	1363	3903	0	3886	3873	1299	0			3867		
vC1, stage 1 conf vol												
vC2, stage 2 conf vol												
vCu, unblocked vol	1363	3903	0	3886	3873	1299	0			3867		
tC, single (s)	7.5	6.5	6.9	7.5	6.5	6.9	4.1			4.1		
tC, 2 stage (s)												
tF (s)	3.5	4.0	3.3	3.5	4.0	3.3	2.2			2.2		
p0 queue free %	0	0	100	0	0	83	99			100		
cM capacity (veh/h)	0	3	1084	0	3	152	1622			50		

Direction, Lane #	EB 1	WB 1	NE 1	NE 2	NE 3
Volume Total	35	89	970	1903	1012
Volume Left	10	0	18	0	0
Volume Right	0	26	0	0	60
cSH	0	5	1622	1700	1700
Volume to Capacity	Err	18.76	0.01	1.12	0.60
Queue Length 95th (ft)	Err	Err	1	0	0
Control Delay (s)	Err	Err	0.3	0.0	0.0
Lane LOS	F	F	A		
Approach Delay (s)	Err	Err	0.1		
Approach LOS	F	F			

Intersection Summary			
Average Delay	Err		
Intersection Capacity Utilization	85.1%	ICU Level of Service	E
Analysis Period (min)	15		

Movement	EBL	EBR	NBL	NBT	SBT	SBR
Lane Configurations						
Volume (veh/h)	10	5	23	363	113	33
Sign Control	Stop			Free	Free	
Grade	0%			0%	0%	
Peak Hour Factor	0.92	0.92	0.92	0.92	0.92	0.92
Hourly flow rate (vph)	11	5	25	395	123	36
Pedestrians						
Lane Width (ft)						
Walking Speed (ft/s)						
Percent Blockage						
Right turn flare (veh)						
Median type				None	None	
Median storage veh)						
Upstream signal (ft)						
pX, platoon unblocked						
vC, conflicting volume	585	141	159			
vC1, stage 1 conf vol						
vC2, stage 2 conf vol						
vCu, unblocked vol	585	141	159			
tC, single (s)	6.4	6.2	4.1			
tC, 2 stage (s)						
tF (s)	3.5	3.3	2.2			
p0 queue free %	98	99	98			
cM capacity (veh/h)	465	907	1421			

Direction, Lane #	EB 1	NB 1	SB 1
Volume Total	16	420	159
Volume Left	11	25	0
Volume Right	5	0	36
cSH	555	1421	1700
Volume to Capacity	0.03	0.02	0.09
Queue Length 95th (ft)	2	1	0
Control Delay (s)	11.7	0.6	0.0
Lane LOS	B	A	
Approach Delay (s)	11.7	0.6	0.0
Approach LOS	B		

Intersection Summary			
Average Delay	0.8		
Intersection Capacity Utilization	41.7%	ICU Level of Service	A
Analysis Period (min)	15		

Movement	EBL	EBR	NBL	NBT	SBT	SBR
Lane Configurations						
Volume (veh/h)	11	1	11	370	145	1
Sign Control	Stop			Free	Free	
Grade	0%			0%	0%	
Peak Hour Factor	0.92	0.92	0.92	0.92	0.92	0.92
Hourly flow rate (vph)	12	1	12	402	158	1
Pedestrians						
Lane Width (ft)						
Walking Speed (ft/s)						
Percent Blockage						
Right turn flare (veh)						
Median type				None	None	
Median storage veh)						
Upstream signal (ft)						
pX, platoon unblocked						
vC, conflicting volume	584	158	159			
vC1, stage 1 conf vol						
vC2, stage 2 conf vol						
vCu, unblocked vol	584	158	159			
tC, single (s)	6.4	6.2	4.1			
tC, 2 stage (s)						
tF (s)	3.5	3.3	2.2			
p0 queue free %	97	100	99			
cM capacity (veh/h)	470	887	1421			

Direction, Lane #	EB 1	NB 1	SB 1
Volume Total	13	414	159
Volume Left	12	12	0
Volume Right	1	0	1
cSH	489	1421	1700
Volume to Capacity	0.03	0.01	0.09
Queue Length 95th (ft)	2	1	0
Control Delay (s)	12.6	0.3	0.0
Lane LOS	B	A	
Approach Delay (s)	12.6	0.3	0.0
Approach LOS	B		

Intersection Summary			
Average Delay	0.5		
Intersection Capacity Utilization	38.3%	ICU Level of Service	A
Analysis Period (min)	15		

Movement	EBL	EBR	NBL	NBT	SBT	SBR
Lane Configurations						
Volume (veh/h)	29	11	9	365	136	5
Sign Control	Stop			Free	Free	
Grade	0%			0%	0%	
Peak Hour Factor	0.92	0.92	0.92	0.92	0.92	0.92
Hourly flow rate (vph)	32	12	10	397	148	5
Pedestrians						
Lane Width (ft)						
Walking Speed (ft/s)						
Percent Blockage						
Right turn flare (veh)						
Median type				None	None	
Median storage veh)						
Upstream signal (ft)						
pX, platoon unblocked						
vC, conflicting volume	567	151	153			
vC1, stage 1 conf vol						
vC2, stage 2 conf vol						
vCu, unblocked vol	567	151	153			
tC, single (s)	6.4	6.2	4.1			
tC, 2 stage (s)						
tF (s)	3.5	3.3	2.2			
p0 queue free %	93	99	99			
cM capacity (veh/h)	482	896	1427			

Direction, Lane #	EB 1	NB 1	SB 1
Volume Total	43	407	153
Volume Left	32	10	0
Volume Right	12	0	5
cSH	552	1427	1700
Volume to Capacity	0.08	0.01	0.09
Queue Length 95th (ft)	6	1	0
Control Delay (s)	12.1	0.2	0.0
Lane LOS	B	A	
Approach Delay (s)	12.1	0.2	0.0
Approach LOS	B		

Intersection Summary			
Average Delay	1.0		
Intersection Capacity Utilization	36.4%	ICU Level of Service	A
Analysis Period (min)	15		

Movement	EBL	EBR	NBL	NBT	SBT	SBR
Lane Configurations						
Volume (veh/h)	28	23	22	345	106	17
Sign Control	Stop			Free	Free	
Grade	0%			0%	0%	
Peak Hour Factor	0.92	0.92	0.92	0.92	0.92	0.92
Hourly flow rate (vph)	30	25	24	375	115	18
Pedestrians						
Lane Width (ft)						
Walking Speed (ft/s)						
Percent Blockage						
Right turn flare (veh)						
Median type				None	None	
Median storage veh)						
Upstream signal (ft)						
pX, platoon unblocked						
vC, conflicting volume	547	124	134			
vC1, stage 1 conf vol						
vC2, stage 2 conf vol						
vCu, unblocked vol	547	124	134			
tC, single (s)	6.4	6.2	4.1			
tC, 2 stage (s)						
tF (s)	3.5	3.3	2.2			
p0 queue free %	94	97	98			
cM capacity (veh/h)	490	926	1451			

Direction, Lane #	EB 1	NB 1	SB 1
Volume Total	55	399	134
Volume Left	30	24	0
Volume Right	25	0	18
cSH	622	1451	1700
Volume to Capacity	0.09	0.02	0.08
Queue Length 95th (ft)	7	1	0
Control Delay (s)	11.4	0.6	0.0
Lane LOS	B	A	
Approach Delay (s)	11.4	0.6	0.0
Approach LOS	B		

Intersection Summary			
Average Delay	1.5		
Intersection Capacity Utilization	39.3%	ICU Level of Service	A
Analysis Period (min)	15		

Movement	EBL	EBT	EBR	WBL	WBT	WBR	NBL	NBT	NBR	SBL	SBT	SBR
Lane Configurations												
Sign Control		Stop			Stop			Stop			Stop	
Volume (vph)	5	134	91	44	127	8	22	278	21	4	7	1
Peak Hour Factor	0.92	0.92	0.92	0.92	0.92	0.92	0.92	0.92	0.92	0.92	0.92	0.92
Hourly flow rate (vph)	5	146	99	48	138	9	24	302	23	4	8	1

Direction, Lane #	EB 1	WB 1	NB 1	SB 1
Volume Total (vph)	250	195	349	13
Volume Left (vph)	5	48	24	4
Volume Right (vph)	99	9	23	1
Hadj (s)	-0.20	0.06	0.01	0.05
Departure Headway (s)	5.0	5.3	5.1	5.7
Degree Utilization, x	0.35	0.29	0.49	0.02
Capacity (veh/h)	671	629	666	544
Control Delay (s)	10.6	10.4	12.9	8.8
Approach Delay (s)	10.6	10.4	12.9	8.8
Approach LOS	B	B	B	A

Intersection Summary			
Delay	11.5		
HCM Level of Service	B		
Intersection Capacity Utilization	50.2%	ICU Level of Service	A
Analysis Period (min)	15		

HCM Unsignalized Intersection Capacity Analysis
1: SW 97th Ave. & SW 174th St.

2/18/2015

Movement	EBL	EBT	EBR	WBL	WBT	WBR	NBL	NBT	NBR	SBL	SBT	SBR
Lane Configurations												
Sign Control		Stop			Stop			Stop			Stop	
Volume (vph)	3	134	38	53	314	2	26	13	14	124	170	17
Peak Hour Factor	0.84	0.84	0.84	0.84	0.84	0.84	0.84	0.84	0.84	0.84	0.84	0.84
Hourly flow rate (vph)	4	160	45	63	374	2	31	15	17	148	202	20

Direction, Lane #	EB 1	WB 1	NB 1	SB 1
Volume Total (vph)	208	439	63	370
Volume Left (vph)	4	63	31	148
Volume Right (vph)	45	2	17	20
Hadj (s)	-0.09	0.06	-0.03	0.08
Departure Headway (s)	6.0	5.8	6.7	6.0
Degree Utilization, x	0.35	0.70	0.12	0.62
Capacity (veh/h)	542	603	438	564
Control Delay (s)	12.2	21.2	10.6	18.4
Approach Delay (s)	12.2	21.2	10.6	18.4
Approach LOS	B	C	B	C

Intersection Summary			
Delay	17.9		
HCM Level of Service	C		
Intersection Capacity Utilization	58.9%	ICU Level of Service	B
Analysis Period (min)	15		

Lane Group	EBL	NBT	SBT	NET
Lane Group Flow (vph)	191	374	210	2923
v/c Ratio	1.03	0.85	0.59	0.98
Control Delay	134.1	50.6	59.2	41.4
Queue Delay	0.0	0.0	0.0	0.0
Total Delay	134.1	50.6	59.2	41.4
Queue Length 50th (ft)	~186	203	176	912
Queue Length 95th (ft)	#344	#377	264	#1073
Internal Link Dist (ft)	257	1041	665	1300
Turn Bay Length (ft)				
Base Capacity (vph)	185	438	356	2973
Starvation Cap Reductn	0	0	0	0
Spillback Cap Reductn	0	0	0	0
Storage Cap Reductn	0	0	0	0
Reduced v/c Ratio	1.03	0.85	0.59	0.98

Intersection Summary

~ Volume exceeds capacity, queue is theoretically infinite.
Queue shown is maximum after two cycles.

95th percentile volume exceeds capacity, queue may be longer.
Queue shown is maximum after two cycles.

Movement	EBL	EBR	NBL	NBT	NBR	SBT	SBR	NEL2	NEL	NET	NER
Lane Configurations											
Volume (vph)	12	169	5	20	331	184	15	5	6	2737	29
Ideal Flow (vphpl)	1900	1900	1900	1900	1900	1900	1900	1900	1900	1900	1900
Total Lost time (s)	5.0			5.0		5.0				5.0	
Lane Util. Factor	1.00			1.00		1.00				0.91	
Frt	0.87			0.87		0.99				1.00	
Flt Protected	1.00			1.00		1.00				1.00	
Satd. Flow (prot)	1623			1628		1844				5076	
Flt Permitted	1.00			1.00		1.00				1.00	
Satd. Flow (perm)	1623			1622		1844				5076	
Peak-hour factor, PHF	0.95	0.95	0.95	0.95	0.95	0.95	0.95	0.95	0.95	0.95	0.95
Adj. Flow (vph)	13	178	5	21	348	194	16	5	6	2881	31
RTOR Reduction (vph)	0	0	0	125	0	0	0	0	0	1	0
Lane Group Flow (vph)	191	0	0	249	0	210	0	0	0	2922	0
Turn Type	NA		Perm	NA		NA		Perm	Perm	NA	
Protected Phases	3			4		8				6	
Permitted Phases			4					6	6		
Actuated Green, G (s)	16.0			27.0		27.0				82.0	
Effective Green, g (s)	16.0			27.0		27.0				82.0	
Actuated g/C Ratio	0.11			0.19		0.19				0.59	
Clearance Time (s)	5.0			5.0		5.0				5.0	
Vehicle Extension (s)	3.0			3.0		3.0				3.0	
Lane Grp Cap (vph)	185			313		356				2973	
v/s Ratio Prot	c0.12					0.11					
v/s Ratio Perm				c0.15						0.58	
v/c Ratio	1.03			0.80		0.59				0.98	
Uniform Delay, d1	62.0			53.9		51.5				28.3	
Progression Factor	1.00			1.00		1.00				1.00	
Incremental Delay, d2	74.9			18.6		7.0				13.0	
Delay (s)	136.9			72.4		58.5				41.3	
Level of Service	F			E		E				D	
Approach Delay (s)	136.9			72.4		58.5				41.3	
Approach LOS	F			E		E				D	

Intersection Summary			
HCM Average Control Delay	50.3	HCM Level of Service	D
HCM Volume to Capacity ratio	0.95		
Actuated Cycle Length (s)	140.0	Sum of lost time (s)	15.0
Intersection Capacity Utilization	103.5%	ICU Level of Service	G
Analysis Period (min)	15		
c Critical Lane Group			

Movement	EBL	EBR	NBL	NBT	SBT	SBR
Lane Configurations						
Volume (veh/h)	48	45	36	310	254	77
Sign Control	Stop			Free	Free	
Grade	0%			0%	0%	
Peak Hour Factor	0.93	0.93	0.93	0.93	0.93	0.93
Hourly flow rate (vph)	52	48	39	333	273	83
Pedestrians						
Lane Width (ft)						
Walking Speed (ft/s)						
Percent Blockage						
Right turn flare (veh)						
Median type				None	None	
Median storage veh)						
Upstream signal (ft)					1121	
pX, platoon unblocked	0.96	0.96	0.96			
vC, conflicting volume	725	315	356			
vC1, stage 1 conf vol						
vC2, stage 2 conf vol						
vCu, unblocked vol	691	262	305			
tC, single (s)	6.4	6.2	4.1			
tC, 2 stage (s)						
tF (s)	3.5	3.3	2.2			
p0 queue free %	86	93	97			
cM capacity (veh/h)	380	744	1202			

Direction, Lane #	EB 1	NB 1	SB 1
Volume Total	100	372	356
Volume Left	52	39	0
Volume Right	48	0	83
cSH	498	1202	1700
Volume to Capacity	0.20	0.03	0.21
Queue Length 95th (ft)	19	2	0
Control Delay (s)	14.0	1.1	0.0
Lane LOS	B	A	
Approach Delay (s)	14.0	1.1	0.0
Approach LOS	B		

Intersection Summary			
Average Delay	2.2		
Intersection Capacity Utilization	51.8%	ICU Level of Service	A
Analysis Period (min)	15		

Movement	WBL	WBR	NBT	NBR	SBL	SBT
Lane Configurations						
Volume (veh/h)	137	49	284	28	33	240
Sign Control	Stop		Free			Free
Grade	0%		0%			0%
Peak Hour Factor	0.97	0.97	0.97	0.97	0.97	0.97
Hourly flow rate (vph)	141	51	293	29	34	247
Pedestrians						
Lane Width (ft)						
Walking Speed (ft/s)						
Percent Blockage						
Right turn flare (veh)						
Median type			None			None
Median storage veh)						
Upstream signal (ft)						
pX, platoon unblocked						
vC, conflicting volume	623	307			322	
vC1, stage 1 conf vol						
vC2, stage 2 conf vol						
vCu, unblocked vol	623	307			322	
tC, single (s)	6.4	6.2			4.1	
tC, 2 stage (s)						
tF (s)	3.5	3.3			2.2	
p0 queue free %	68	93			97	
cM capacity (veh/h)	438	733			1238	

Direction, Lane #	WB 1	NB 1	SB 1
Volume Total	192	322	281
Volume Left	141	0	34
Volume Right	51	29	0
cSH	490	1700	1238
Volume to Capacity	0.39	0.19	0.03
Queue Length 95th (ft)	46	0	2
Control Delay (s)	17.0	0.0	1.2
Lane LOS	C		A
Approach Delay (s)	17.0	0.0	1.2
Approach LOS	C		

Intersection Summary			
Average Delay	4.5		
Intersection Capacity Utilization	51.7%	ICU Level of Service	A
Analysis Period (min)	15		

Movement	EBL	EBR	NBL	NBT	SBT	SBR
Lane Configurations						
Volume (veh/h)	25	33	10	346	281	93
Sign Control	Stop			Free	Free	
Grade	0%			0%	0%	
Peak Hour Factor	0.94	0.94	0.94	0.94	0.94	0.94
Hourly flow rate (vph)	27	35	11	368	299	99
Pedestrians						
Lane Width (ft)						
Walking Speed (ft/s)						
Percent Blockage						
Right turn flare (veh)						
Median type				None	None	
Median storage veh)						
Upstream signal (ft)				1230		
pX, platoon unblocked						
vC, conflicting volume	738	348	398			
vC1, stage 1 conf vol						
vC2, stage 2 conf vol						
vCu, unblocked vol	738	348	398			
tC, single (s)	6.4	6.2	4.1			
tC, 2 stage (s)						
tF (s)	3.5	3.3	2.2			
p0 queue free %	93	95	99			
cM capacity (veh/h)	382	695	1161			

Direction, Lane #	EB 1	NB 1	SB 1
Volume Total	62	379	398
Volume Left	27	11	0
Volume Right	35	0	99
cSH	513	1161	1700
Volume to Capacity	0.12	0.01	0.23
Queue Length 95th (ft)	10	1	0
Control Delay (s)	13.0	0.3	0.0
Lane LOS	B	A	
Approach Delay (s)	13.0	0.3	0.0
Approach LOS	B		

Intersection Summary			
Average Delay	1.1		
Intersection Capacity Utilization	36.3%	ICU Level of Service	A
Analysis Period (min)	15		

Movement	EBL	EBT	EBR	WBL	WBT	WBR	NBL	NBT	NBR	SBL	SBT	SBR
Lane Configurations												
Volume (veh/h)	52	2	24	53	31	2	9	265	36	1	257	53
Sign Control		Stop			Stop			Free			Free	
Grade		0%			0%			0%			0%	
Peak Hour Factor	0.92	0.92	0.92	0.92	0.92	0.92	0.92	0.92	0.92	0.92	0.92	0.92
Hourly flow rate (vph)	57	2	26	58	34	2	10	288	39	1	279	58
Pedestrians												
Lane Width (ft)												
Walking Speed (ft/s)												
Percent Blockage												
Right turn flare (veh)												
Median type								None			None	
Median storage veh)												
Upstream signal (ft)								904				
pX, platoon unblocked	0.98	0.98		0.98	0.98	0.98				0.98		
vC, conflicting volume	657	657	308	665	666	308	337			327		
vC1, stage 1 conf vol												
vC2, stage 2 conf vol												
vCu, unblocked vol	637	638	308	645	647	280	337			300		
tC, single (s)	7.1	6.5	6.2	7.1	6.5	6.2	4.1			4.1		
tC, 2 stage (s)												
tF (s)	3.5	4.0	3.3	3.5	4.0	3.3	2.2			2.2		
p0 queue free %	84	99	96	84	91	100	99			100		
cM capacity (veh/h)	352	382	732	359	378	742	1222			1233		

Direction, Lane #	EB 1	WB 1	NB 1	SB 1
Volume Total	85	93	337	338
Volume Left	57	58	10	1
Volume Right	26	2	39	58
cSH	420	370	1222	1233
Volume to Capacity	0.20	0.25	0.01	0.00
Queue Length 95th (ft)	19	25	1	0
Control Delay (s)	15.7	18.0	0.3	0.0
Lane LOS	C	C	A	A
Approach Delay (s)	15.7	18.0	0.3	0.0
Approach LOS	C	C		

Intersection Summary			
Average Delay	3.7		
Intersection Capacity Utilization	35.0%	ICU Level of Service	A
Analysis Period (min)	15		

Movement	EBL	EBT	EBR	WBL	WBT	WBR	NBL	NBT	NBR	SBL	SBT	SBR
Lane Configurations												
Volume (veh/h)	6	3	4	19	1	1	5	299	11	0	330	6
Sign Control		Stop			Stop			Free			Free	
Grade		0%			0%			0%			0%	
Peak Hour Factor	0.95	0.95	0.95	0.95	0.95	0.95	0.95	0.95	0.95	0.95	0.95	0.95
Hourly flow rate (vph)	6	3	4	20	1	1	5	315	12	0	347	6
Pedestrians												
Lane Width (ft)												
Walking Speed (ft/s)												
Percent Blockage												
Right turn flare (veh)												
Median type								None			None	
Median storage veh)												
Upstream signal (ft)								601				
pX, platoon unblocked	0.92	0.92		0.92	0.92	0.92				0.92		
vC, conflicting volume	683	687	351	687	685	321	354			326		
vC1, stage 1 conf vol												
vC2, stage 2 conf vol												
vCu, unblocked vol	614	618	351	618	615	220	354			226		
tC, single (s)	7.1	6.5	6.2	7.1	6.5	6.2	4.1			4.1		
tC, 2 stage (s)												
tF (s)	3.5	4.0	3.3	3.5	4.0	3.3	2.2			2.2		
p0 queue free %	98	99	99	95	100	100	100			100		
cM capacity (veh/h)	370	371	693	364	373	755	1205			1237		

Direction, Lane #	EB 1	WB 1	NB 1	SB 1
Volume Total	14	22	332	354
Volume Left	6	20	5	0
Volume Right	4	1	12	6
cSH	432	374	1205	1237
Volume to Capacity	0.03	0.06	0.00	0.00
Queue Length 95th (ft)	2	5	0	0
Control Delay (s)	13.6	15.2	0.2	0.0
Lane LOS	B	C	A	
Approach Delay (s)	13.6	15.2	0.2	0.0
Approach LOS	B	C		

Intersection Summary			
Average Delay	0.8		
Intersection Capacity Utilization	30.4%	ICU Level of Service	A
Analysis Period (min)	15		

Movement	EBL	EBT	EBR	WBL	WBT	WBR	NBL	NBT	NBR	SBL	SBT	SBR
Lane Configurations												
Volume (veh/h)	8	29	77	13	66	1	12	307	17	5	289	59
Sign Control		Stop			Stop			Free			Free	
Grade		0%			0%			0%			0%	
Peak Hour Factor	0.97	0.97	0.97	0.97	0.97	0.97	0.97	0.97	0.97	0.97	0.97	0.97
Hourly flow rate (vph)	8	30	79	13	68	1	12	316	18	5	298	61
Pedestrians												
Lane Width (ft)												
Walking Speed (ft/s)												
Percent Blockage												
Right turn flare (veh)												
Median type								None			None	
Median storage veh)												
Upstream signal (ft)								300				
pX, platoon unblocked	0.84	0.84		0.84	0.84	0.84				0.84		
vC, conflicting volume	724	697	328	783	719	325	359			334		
vC1, stage 1 conf vol												
vC2, stage 2 conf vol												
vCu, unblocked vol	581	550	328	651	575	109	359			119		
tC, single (s)	7.1	6.5	6.2	7.1	6.5	6.2	4.1			4.1		
tC, 2 stage (s)												
tF (s)	3.5	4.0	3.3	3.5	4.0	3.3	2.2			2.2		
p0 queue free %	97	92	89	95	81	100	99			100		
cM capacity (veh/h)	303	369	713	266	357	798	1200			1240		

Direction, Lane #	EB 1	WB 1	NB 1	SB 1
Volume Total	118	82	346	364
Volume Left	8	13	12	5
Volume Right	79	1	18	61
cSH	535	340	1200	1240
Volume to Capacity	0.22	0.24	0.01	0.00
Queue Length 95th (ft)	21	23	1	0
Control Delay (s)	13.6	18.9	0.4	0.2
Lane LOS	B	C	A	A
Approach Delay (s)	13.6	18.9	0.4	0.2
Approach LOS	B	C		

Intersection Summary			
Average Delay	3.7		
Intersection Capacity Utilization	38.3%	ICU Level of Service	A
Analysis Period (min)	15		

Lane Group	EBL	EBT	EBR	WBL	WBT	NBL	NBT	SBL	SBT
Lane Group Flow (vph)	170	564	103	224	538	205	410	25	389
v/c Ratio	0.32	0.87	0.21	0.59	0.42	0.52	0.51	0.07	0.57
Control Delay	14.3	48.4	10.9	20.1	27.4	30.7	26.4	23.9	43.3
Queue Delay	0.0	0.0	0.0	0.0	0.0	0.0	0.0	0.0	0.0
Total Delay	14.3	48.4	10.9	20.1	27.4	30.7	26.4	23.9	43.3
Queue Length 50th (ft)	57	325	10	78	153	108	84	12	135
Queue Length 95th (ft)	97	#521	54	126	208	170	131	30	186
Internal Link Dist (ft)		1915			531		229		156
Turn Bay Length (ft)	130			95		155		130	
Base Capacity (vph)	546	714	552	389	1422	395	850	353	724
Starvation Cap Reductn	0	0	0	0	0	0	0	0	0
Spillback Cap Reductn	0	0	0	0	0	0	0	0	0
Storage Cap Reductn	0	0	0	0	0	0	0	0	0
Reduced v/c Ratio	0.31	0.79	0.19	0.58	0.38	0.52	0.48	0.07	0.54

Intersection Summary

95th percentile volume exceeds capacity, queue may be longer.
Queue shown is maximum after two cycles.

Movement	EBL	EBT	EBR	WBL	WBT	WBR	NBL	NBT	NBR	SBL	SBT	SBR
Lane Configurations												
Volume (vph)	155	513	94	204	467	23	187	213	160	23	314	40
Ideal Flow (vphpl)	1900	1900	1900	1900	1900	1900	1900	1900	1900	1900	1900	1900
Total Lost time (s)	3.0	3.0	5.0	3.0	3.0		3.0	3.0		3.0	3.0	
Lane Util. Factor	1.00	1.00	1.00	1.00	0.95		1.00	0.95		1.00	0.95	
Frt	1.00	1.00	0.85	1.00	0.99		1.00	0.94		1.00	0.98	
Flt Protected	0.95	1.00	1.00	0.95	1.00		0.95	1.00		0.95	1.00	
Satd. Flow (prot)	1770	1863	1583	1770	3515		1770	3311		1770	3479	
Flt Permitted	0.41	1.00	1.00	0.24	1.00		0.42	1.00		0.51	1.00	
Satd. Flow (perm)	772	1863	1583	442	3515		783	3311		953	3479	
Peak-hour factor, PHF	0.91	0.91	0.91	0.91	0.91	0.91	0.91	0.91	0.91	0.91	0.91	0.91
Adj. Flow (vph)	170	564	103	224	513	25	205	234	176	25	345	44
RTOR Reduction (vph)	0	0	61	0	3	0	0	117	0	0	8	0
Lane Group Flow (vph)	170	564	42	224	535	0	205	293	0	25	381	0
Turn Type	custom	NA	custom	custom	NA		custom	NA		custom	NA	
Protected Phases	1 2	2 4		1 3	3 4		5 6	6 8		5 7	7 8	
Permitted Phases	4		4	4			8			8		
Actuated Green, G (s)	49.5	36.1	30.3	45.8	38.4		31.9	19.8		26.6	20.5	
Effective Green, g (s)	49.5	36.1	30.3	45.8	38.4		31.9	19.8		26.6	20.5	
Actuated g/C Ratio	0.44	0.32	0.27	0.41	0.35		0.29	0.18		0.24	0.18	
Clearance Time (s)			5.0									
Vehicle Extension (s)			3.0									
Lane Grp Cap (vph)	516	604	431	367	1213		377	589		315	641	
v/s Ratio Prot	0.06	c0.30		c0.09	0.15		c0.08	0.09		0.01	c0.11	
v/s Ratio Perm	0.09		0.03	0.17			0.07			0.01		
v/c Ratio	0.33	0.93	0.10	0.61	0.44		0.54	0.50		0.08	0.59	
Uniform Delay, d1	19.0	36.4	30.3	23.3	28.2		32.1	41.3		32.7	41.6	
Progression Factor	1.00	1.00	1.00	1.00	1.00		1.00	1.00		1.00	1.00	
Incremental Delay, d2	0.4	21.6	0.1	3.0	0.3		1.6	0.7		0.1	1.5	
Delay (s)	19.4	58.1	30.4	26.3	28.4		33.7	41.9		32.8	43.1	
Level of Service	B	E	C	C	C		C	D		C	D	
Approach Delay (s)		46.8			27.8			39.2			42.5	
Approach LOS		D			C			D			D	

Intersection Summary			
HCM Average Control Delay	38.8	HCM Level of Service	D
HCM Volume to Capacity ratio	0.69		
Actuated Cycle Length (s)	111.3	Sum of lost time (s)	18.0
Intersection Capacity Utilization	71.9%	ICU Level of Service	C
Analysis Period (min)	15		
c Critical Lane Group			

Movement	EBL	EBT	WBT	WBR	SBL	SBR
Lane Configurations						
Volume (veh/h)	252	518	590	30	81	117
Sign Control		Free	Free		Stop	
Grade		0%	0%		0%	
Peak Hour Factor	0.94	0.94	0.94	0.94	0.94	0.94
Hourly flow rate (vph)	268	551	628	32	86	124
Pedestrians						
Lane Width (ft)						
Walking Speed (ft/s)						
Percent Blockage						
Right turn flare (veh)						
Median type		None	None			
Median storage veh)						
Upstream signal (ft)		611				
pX, platoon unblocked					0.77	
vC, conflicting volume	660				1731	644
vC1, stage 1 conf vol						
vC2, stage 2 conf vol						
vCu, unblocked vol	660				1801	644
tC, single (s)	4.1				6.4	6.2
tC, 2 stage (s)						
tF (s)	2.2				3.5	3.3
p0 queue free %	71				0	74
cM capacity (veh/h)	928				48	473

Direction, Lane #	EB 1	EB 2	WB 1	SB 1
Volume Total	268	551	660	211
Volume Left	268	0	0	86
Volume Right	0	0	32	124
cSH	928	1700	1700	102
Volume to Capacity	0.29	0.32	0.39	2.06
Queue Length 95th (ft)	30	0	0	449
Control Delay (s)	10.4	0.0	0.0	579.1
Lane LOS	B			F
Approach Delay (s)	3.4		0.0	579.1
Approach LOS				F

Intersection Summary			
Average Delay	73.9		
Intersection Capacity Utilization	68.5%	ICU Level of Service	C
Analysis Period (min)	15		

Lane Group	EBL	EBT	WBL	WBT	NBL	NBT	SBL	SBT
Lane Group Flow (vph)	514	621	339	694	144	2328	290	3593
v/c Ratio	1.27	0.78	1.34	1.31	1.22	1.14	1.49	1.60
Control Delay	182.8	56.6	221.3	199.0	178.9	106.5	276.7	300.3
Queue Delay	0.0	0.0	0.0	0.0	0.0	0.0	0.0	0.0
Total Delay	182.8	56.6	221.3	199.0	178.9	106.5	276.7	300.3
Queue Length 50th (ft)	~589	273	~441	~445	~108	~901	~313	~1709
Queue Length 95th (ft)	#814	345	#659	#580	#254	#992	#503	#1773
Internal Link Dist (ft)		364		1915		469		768
Turn Bay Length (ft)			286		160		130	
Base Capacity (vph)	405	800	253	528	118	2047	194	2247
Starvation Cap Reductn	0	0	0	0	0	0	0	0
Spillback Cap Reductn	0	0	0	0	0	0	0	0
Storage Cap Reductn	0	0	0	0	0	0	0	0
Reduced v/c Ratio	1.27	0.78	1.34	1.31	1.22	1.14	1.49	1.60

Intersection Summary

~ Volume exceeds capacity, queue is theoretically infinite.
Queue shown is maximum after two cycles.

95th percentile volume exceeds capacity, queue may be longer.
Queue shown is maximum after two cycles.

Movement	EBL	EBT	EBR	WBL	WBT	WBR	NBL	NBT	NBR	SBL	SBT	SBR
Lane Configurations												
Volume (vph)	483	468	116	399	493	80	135	1958	230	273	2623	755
Ideal Flow (vphpl)	1900	1900	1900	1900	1900	1900	1900	1900	1900	1900	1900	1900
Total Lost time (s)	5.0	5.0		5.0	5.0		3.0	5.0		3.0	5.0	
Lane Util. Factor	1.00	0.95		0.91	0.91		1.00	0.91		1.00	0.91	
Frt	1.00	0.97		1.00	0.98		1.00	0.98		1.00	0.97	
Flt Protected	0.95	1.00		0.95	0.99		0.95	1.00		0.95	1.00	
Satd. Flow (prot)	1770	3434		1610	3308		1770	5005		1770	4915	
Flt Permitted	0.95	1.00		0.95	0.99		0.07	1.00		0.07	1.00	
Satd. Flow (perm)	1770	3434		1610	3308		131	5005		124	4915	
Peak-hour factor, PHF	0.94	0.94	0.94	0.94	0.94	0.94	0.94	0.94	0.94	0.94	0.94	0.94
Adj. Flow (vph)	514	498	123	424	524	85	144	2083	245	290	2790	803
RTOR Reduction (vph)	0	15	0	0	8	0	0	10	0	0	37	0
Lane Group Flow (vph)	514	606	0	339	686	0	144	2318	0	290	3556	0
Turn Type	Split	NA		Split	NA		pm+pt	NA		pm+pt	NA	
Protected Phases	4	4		8	8		5	2		1	6	
Permitted Phases							2			6		
Actuated Green, G (s)	32.0	32.0		22.0	22.0		62.0	57.0		71.0	63.0	
Effective Green, g (s)	32.0	32.0		22.0	22.0		62.0	57.0		71.0	63.0	
Actuated g/C Ratio	0.23	0.23		0.16	0.16		0.44	0.41		0.51	0.45	
Clearance Time (s)	5.0	5.0		5.0	5.0		3.0	5.0		3.0	5.0	
Vehicle Extension (s)	3.0	3.0		3.0	3.0		3.0	3.0		3.0	3.0	
Lane Grp Cap (vph)	405	785		253	520		117	2038		192	2212	
v/s Ratio Prot	c0.29	0.18		c0.21	0.21		0.04	0.46		c0.12	c0.72	
v/s Ratio Perm							0.50			0.65		
v/c Ratio	1.27	0.77		1.34	1.32		1.23	1.14		1.51	1.61	
Uniform Delay, d1	54.0	50.6		59.0	59.0		37.0	41.5		43.3	38.5	
Progression Factor	1.00	1.00		1.00	1.00		1.00	1.00		1.00	1.00	
Incremental Delay, d2	139.3	4.7		177.2	157.1		157.8	68.4		254.7	275.6	
Delay (s)	193.3	55.3		236.2	216.1		194.8	109.9		298.0	314.1	
Level of Service	F	E		F	F		F	F		F	F	
Approach Delay (s)		117.8			222.7			114.9			312.9	
Approach LOS		F			F			F			F	

Intersection Summary			
HCM Average Control Delay	218.5	HCM Level of Service	F
HCM Volume to Capacity ratio	1.44		
Actuated Cycle Length (s)	140.0	Sum of lost time (s)	13.0
Intersection Capacity Utilization	136.1%	ICU Level of Service	H
Analysis Period (min)	15		
c Critical Lane Group			

Movement	EBL	EBT	EBR	WBL	WBT	WBR	NBL	NBT	NBR	SBL	SBT	SBR
Lane Configurations												
Volume (vph)	483	468	116	399	493	80	135	1958	230	273	2623	755
Movement Number	7	4	14	3	8	18	5	2	12	1	6	16
Initial Queue, veh	0	0	0	0	0	0	0	0	0	0	0	0
Ped-Bike Adj. Factor (A_pbT)	1.00		1.00	1.00		1.00	1.00		1.00	1.00		1.00
Parking, Bus Adj. Factors	1.00	1.00	1.00	1.00	1.00	1.00	1.00	1.00	1.00	1.00	1.00	1.00
Adj. Sat. Flow Rate, veh/h/ln	1863	1863	1863	1863	1863	1863	1863	1863	1863	1863	1863	1863
Lanes	1	2	0	1	2	0	1	3	0	1	3	0
Lane Assignment												
Capacity, veh/h	405	660	163	279	492	80	115	1882	218	191	1804	475
Proportion Arriving On Green	0.23	0.23	0.23	0.16	0.16	0.16	0.04	0.41	0.41	0.08	0.45	0.45
Movement Delay, s/veh	192.5	57.6	58.6	311.7	129.3	132.8	200.8	98.5	113.7	305.5	276.0	354.4
Movement LOS	F	E	E	F	F	F	F	F	F	F	F	F
Approach Volume, veh/h		1135			1034			2471			3884	
Approach Delay, s/veh		118.9			205.2			109.4			304.0	
Approach LOS		F			F			F			F	

Timer:	1	2	3	4	5	6	7	8
Assigned Phase	1	2	8	4	5	6		
Case No	1.1	4.0	10.0	10.0	1.1	4.0		
Phase Duration (G+Y+Rc), s	14.00	62.00	27.00	37.00	8.00	68.00		
Change Period (Y+Rc), s	3.00	5.00	5.00	5.00	3.00	5.00		
Max. Allowable Headway (MAH), s	4.00	3.97	3.97	3.98	4.00	3.97		
Maximum Green Setting (Gmax), s	11.00	57.00	22.00	32.00	5.00	63.00		
Max. Queue Clearance Time (g_c+I1), s	13.00	59.00	24.00	34.00	7.00	65.00		
Green Extension Time (g_e), s	0.00	0.00	0.00	0.00	0.00	0.00		
Probability of Phase Call (p_c)	1.000	1.000	1.000	1.000	0.996	1.000		
Probability of Max Out (p_x)	1.000	1.000	1.000	1.000	1.000	1.000		

Left-Turn Movement Data					
Assigned Movement	1		3	7	5
Mvmt. Sat Flow, veh/h	1774.04		1774.04	1774.04	1774.04

Through Movement Data					
Assigned Movement		2	8	4	6
Mvmt. Sat Flow, veh/h		4622.54	3130.27	2888.10	4009.95

Right-Turn Movement Data					
Assigned Movement		12	18	14	16
Mvmt. Sat Flow, veh/h		535.84	505.93	711.79	1056.54

Left Lane Group Data								
Assigned Movement	1	0	3	7	5	0	0	0
Lane Assignment	L (Pr/Pm)		L	LL (Pr/Pm)				
Lanes in Group	1	0	1	1	1	0	0	0
Group Volume (v), veh/h	290.4	0.0	424.5	513.8	143.6	0.0	0.0	0.0
Group Sat. Flow (s), veh/h/ln	1774.0	0.0	1774.0	1774.0	1774.0	0.0	0.0	0.0
Queue Serve Time (g_s), s	11.0	0.0	22.0	32.0	5.0	0.0	0.0	0.0
Cycle Queue Clear Time (g_c), s	11.0	0.0	22.0	32.0	5.0	0.0	0.0	0.0

Perm LT Sat Flow Rate (s_l), veh/h/ln	155.2	0.0	1774.0	1774.0	43.0	0.0	0.0	0.0
Shared LT Sat Flow (s_sh), veh/h/ln	0.0	0.0	0.0	0.0	0.0	0.0	0.0	0.0
Perm LT Eff. Green (g_p), s	65.0	0.0	0.0	0.0	57.0	0.0	0.0	0.0
Perm LT Serve Time (g_u), s	0.0	0.0	0.0	0.0	2.0	0.0	0.0	0.0
Perm LT Que Serve Time (g_ps), s	0.0	0.0	0.0	0.0	2.0	0.0	0.0	0.0
Time to First Blk (g_f), s	0.0	0.0	0.0	0.0	0.0	0.0	0.0	0.0
Serve Time pre Blk (g_fs), s	0.0	0.0	0.0	0.0	0.0	0.0	0.0	0.0
Proportion LT Inside Lane (P_L)	1.000	0.000	1.000	1.000	1.000	0.000	0.000	0.000
Lane Group Capacity (c), veh/h	190.8	0.0	278.8	405.5	115.4	0.0	0.0	0.0
Volume-to-Capacity Ratio (X)	1.522	0.000	1.523	1.267	1.244	0.000	0.000	0.000
Available Capacity (c_a), veh/h	190.8	0.0	278.8	405.5	115.4	0.0	0.0	0.0
Upstream Filter Factor (I)	1.000	0.000	1.000	1.000	1.000	0.000	0.000	0.000
Uniform Delay (d1), s/veh	45.8	0.0	59.0	54.0	37.3	0.0	0.0	0.0
Incremental Delay (d2), s/veh	259.8	0.0	252.7	138.5	163.5	0.0	0.0	0.0
Initial Queue Delay (d3), s/veh	0.0	0.0	0.0	0.0	0.0	0.0	0.0	0.0
Control Delay (d), s/veh	305.5	0.0	311.7	192.5	200.8	0.0	0.0	0.0
First-Term Queue (Q1), veh/ln	4.8	0.0	9.9	14.3	2.3	0.0	0.0	0.0
Second-Term Queue (Q2), veh/ln	13.8	0.0	19.6	15.6	5.2	0.0	0.0	0.0
Third-Term Queue (Q3), veh/ln	0.0	0.0	0.0	0.0	0.0	0.0	0.0	0.0
Percentile bk-of-que factor (f_B%)	1.000	0.000	1.000	1.000	1.000	0.000	0.000	0.000
Percentile Back of Queue (Q%), veh/ln	18.6	0.0	29.5	29.9	7.6	0.0	0.0	0.0
Percentile Storage Ratio (RQ%)	3.63	0.00	2.62	2.20	1.20	0.00	0.00	0.00
Initial Queue (Qb), veh	0.0	0.0	0.0	0.0	0.0	0.0	0.0	0.0
Final (Residual) Queue (Qe), veh	24.9	0.0	36.4	27.1	7.1	0.0	0.0	0.0
Saturated Delay (ds), s/veh	0.0	0.0	0.0	0.0	0.0	0.0	0.0	0.0
Saturated Queue (Qs), veh	0.0	0.0	0.0	0.0	0.0	0.0	0.0	0.0
Saturated Capacity (cs), veh/h	0.0	0.0	0.0	0.0	0.0	0.0	0.0	0.0
Initial Queue Clear Time (tc), h	0.4	0.0	0.4	0.3	0.3	0.0	0.0	0.0
Middle Lane Group Data								
Assigned Movement	0	2	8	4	0	6	0	0
Lane Assignment		T	T	T		T		
Lanes in Group	0	2	1	1	0	2	0	0
Group Volume (v), veh/h	0.0	1520.3	311.2	320.1	0.0	2319.3	0.0	0.0
Group Sat. Flow (s), veh/h/ln	0.0	1695.1	1862.7	1862.7	0.0	1695.1	0.0	0.0
Queue Serve Time (g_s), s	0.0	57.0	22.0	22.4	0.0	63.0	0.0	0.0
Cycle Queue Clear Time (g_c), s	0.0	57.0	22.0	22.4	0.0	63.0	0.0	0.0
Lane Group Capacity (c), veh/h	0.0	1380.3	292.7	425.8	0.0	1525.6	0.0	0.0
Volume-to-Capacity Ratio (X)	0.000	1.101	1.063	0.752	0.000	1.520	0.000	0.000
Available Capacity (c_a), veh/h	0.0	1380.3	292.7	425.8	0.0	1525.6	0.0	0.0
Upstream Filter Factor (I)	0.000	1.000	1.000	1.000	0.000	1.000	0.000	0.000
Uniform Delay (d1), s/veh	0.0	41.5	59.0	50.3	0.0	38.5	0.0	0.0
Incremental Delay (d2), s/veh	0.0	57.0	70.3	7.3	0.0	237.5	0.0	0.0
Initial Queue Delay (d3), s/veh	0.0	0.0	0.0	0.0	0.0	0.0	0.0	0.0
Control Delay (d), s/veh	0.0	98.5	129.3	57.6	0.0	276.0	0.0	0.0
First-Term Queue (Q1), veh/ln	0.0	23.5	10.4	10.5	0.0	25.7	0.0	0.0
Second-Term Queue (Q2), veh/ln	0.0	10.9	5.7	0.9	0.0	50.3	0.0	0.0
Third-Term Queue (Q3), veh/ln	0.0	0.0	0.0	0.0	0.0	0.0	0.0	0.0
Percentile bk-of-que factor (f_B%)	0.000	1.000	1.000	1.000	0.000	1.000	0.000	0.000
Percentile Back of Queue (Q%), veh/ln	0.0	34.4	16.1	11.3	0.0	76.0	0.0	0.0
Percentile Storage Ratio (RQ%)	0.00	1.91	0.22	0.84	0.00	2.63	0.00	0.00

Initial Queue (Qb), veh	0.0	0.0	0.0	0.0	0.0	0.0	0.0	0.0
Final (Residual) Queue (Qe), veh	0.0	35.0	4.6	0.0	0.0	198.4	0.0	0.0
Saturated Delay (ds), s/veh	0.0	0.0	0.0	0.0	0.0	0.0	0.0	0.0
Saturated Queue (Qs), veh	0.0	0.0	0.0	0.0	0.0	0.0	0.0	0.0
Saturated Capacity (cs), veh/h	0.0	0.0	0.0	0.0	0.0	0.0	0.0	0.0
Initial Queue Clear Time (tc), h	0.0	0.3	0.3	0.0	0.0	0.4	0.0	0.0
Right Lane Group Data								
Assigned Movement	0	12	18	14	0	16	0	0
Lane Assignment		T+R	T+R	T+R		T+R		
Lanes in Group	0	1	1	1	0	1	0	0
Group Volume (v), veh/h	0.0	807.4	298.3	301.2	0.0	1274.3	0.0	0.0
Group Sat. Flow (s), veh/h/ln	0.0	1768.2	1773.5	1737.1	0.0	1676.3	0.0	0.0
Queue Serve Time (g_s), s	0.0	57.0	22.0	22.7	0.0	63.0	0.0	0.0
Cycle Queue Clear Time (g_c), s	0.0	57.0	22.0	22.7	0.0	63.0	0.0	0.0
Prot RT Sat Flow Rate (s_R), veh/h/ln	0.0	0.0	0.0	0.0	0.0	0.0	0.0	0.0
Prot RT Eff. Green (g_R), s	0.0	0.0	0.0	0.0	0.0	0.0	0.0	0.0
Proportion RT Outside Lane (P_R)	0.000	0.303	0.285	0.410	0.000	0.630	0.000	0.000
Lane Group Capacity (c), veh/h	0.0	719.9	278.7	397.1	0.0	754.3	0.0	0.0
Volume-to-Capacity Ratio (X)	0.000	1.122	1.070	0.759	0.000	1.689	0.000	0.000
Available Capacity (c_a), veh/h	0.0	719.9	278.7	397.1	0.0	754.3	0.0	0.0
Upstream Filter Factor (I)	0.000	1.000	1.000	1.000	0.000	1.000	0.000	0.000
Uniform Delay (d1), s/veh	0.0	41.5	59.0	50.4	0.0	38.5	0.0	0.0
Incremental Delay (d2), s/veh	0.0	72.2	73.8	8.2	0.0	315.9	0.0	0.0
Initial Queue Delay (d3), s/veh	0.0	0.0	0.0	0.0	0.0	0.0	0.0	0.0
Control Delay (d), s/veh	0.0	113.7	132.8	58.6	0.0	354.4	0.0	0.0
First-Term Queue (Q1), veh/ln	0.0	24.5	9.9	9.9	0.0	25.4	0.0	0.0
Second-Term Queue (Q2), veh/ln	0.0	14.4	5.7	0.9	0.0	66.2	0.0	0.0
Third-Term Queue (Q3), veh/ln	0.0	0.0	0.0	0.0	0.0	0.0	0.0	0.0
Percentile bk-of-que factor (f_B%)	0.000	1.000	1.000	1.000	0.000	1.000	0.000	0.000
Percentile Back of Queue (Q%), veh/ln	0.0	38.9	15.6	10.8	0.0	91.6	0.0	0.0
Percentile Storage Ratio (RQ%)	0.00	2.16	0.21	0.79	0.00	3.17	0.00	0.00
Initial Queue (Qb), veh	0.0	0.0	0.0	0.0	0.0	0.0	0.0	0.0
Final (Residual) Queue (Qe), veh	0.0	21.9	4.9	0.0	0.0	130.0	0.0	0.0
Saturated Delay (ds), s/veh	0.0	0.0	0.0	0.0	0.0	0.0	0.0	0.0
Saturated Queue (Qs), veh	0.0	0.0	0.0	0.0	0.0	0.0	0.0	0.0
Saturated Capacity (cs), veh/h	0.0	0.0	0.0	0.0	0.0	0.0	0.0	0.0
Initial Queue Clear Time (tc), h	0.0	0.3	0.3	0.0	0.0	0.4	0.0	0.0

Intersection Summary	
HCM Average Control Delay	210.9
HCM Level of Service	F

Movement	EBL	EBT	EBR	WBL	WBT	WBR	NEL	NET	NER	SWL	SWT	SWR
Lane Configurations												
Volume (veh/h)	39	11	0	0	29	37	68	2681	45	0	0	0
Sign Control		Stop			Stop			Free			Free	
Grade		0%			0%			0%			0%	
Peak Hour Factor	0.95	0.95	0.95	0.95	0.95	0.95	0.95	0.95	0.95	0.95	0.95	0.95
Hourly flow rate (vph)	41	12	0	0	31	39	72	2822	47	0	0	0
Pedestrians												
Lane Width (ft)												
Walking Speed (ft/s)												
Percent Blockage												
Right turn flare (veh)												
Median type								None			None	
Median storage veh)												
Upstream signal (ft)												
pX, platoon unblocked												
vC, conflicting volume	1138	3013	0	2995	2989	964	0			2869		
vC1, stage 1 conf vol												
vC2, stage 2 conf vol												
vCu, unblocked vol	1138	3013	0	2995	2989	964	0			2869		
tC, single (s)	7.5	6.5	6.9	7.5	6.5	6.9	4.1			4.1		
tC, 2 stage (s)												
tF (s)	3.5	4.0	3.3	3.5	4.0	3.3	2.2			2.2		
p0 queue free %	0	8	100	100	0	85	96			100		
cM capacity (veh/h)	0	13	1084	1	13	255	1622			128		

Direction, Lane #	EB 1	WB 1	NE 1	NE 2	NE 3
Volume Total	53	69	777	1411	753
Volume Left	41	0	72	0	0
Volume Right	0	39	0	0	47
cSH	0	28	1622	1700	1700
Volume to Capacity	Err	2.50	0.04	0.83	0.44
Queue Length 95th (ft)	Err	208	3	0	0
Control Delay (s)	Err	983.6	1.2	0.0	0.0
Lane LOS	F	F	A		
Approach Delay (s)	Err	983.6	0.3		
Approach LOS	F	F			

Intersection Summary			
Average Delay	Err		
Intersection Capacity Utilization	70.3%	ICU Level of Service	C
Analysis Period (min)	15		

Movement	EBL	EBT	EBR	WBL	WBT	WBR	NEL	NET	NER	SWL	SWT	SWR
Lane Configurations												
Volume (veh/h)	6	10	0	0	137	27	7	2888	18	0	0	0
Sign Control		Stop			Stop			Free			Free	
Grade		0%			0%			0%			0%	
Peak Hour Factor	0.89	0.89	0.89	0.89	0.89	0.89	0.89	0.89	0.89	0.89	0.89	0.89
Hourly flow rate (vph)	7	11	0	0	154	30	8	3245	20	0	0	0
Pedestrians												
Lane Width (ft)												
Walking Speed (ft/s)												
Percent Blockage												
Right turn flare (veh)												
Median type								None			None	
Median storage veh)												
Upstream signal (ft)												
pX, platoon unblocked												
vC, conflicting volume	1205	3281	0	3276	3271	1092	0			3265		
vC1, stage 1 conf vol												
vC2, stage 2 conf vol												
vCu, unblocked vol	1205	3281	0	3276	3271	1092	0			3265		
tC, single (s)	7.5	6.5	6.9	7.5	6.5	6.9	4.1			4.1		
tC, 2 stage (s)												
tF (s)	3.5	4.0	3.3	3.5	4.0	3.3	2.2			2.2		
p0 queue free %	0	0	100	0	0	86	100			100		
cM capacity (veh/h)	0	9	1084	0	9	210	1622			88		

Direction, Lane #	EB 1	WB 1	NE 1	NE 2	NE 3
Volume Total	18	184	819	1622	831
Volume Left	7	0	8	0	0
Volume Right	0	30	0	0	20
cSH	0	10	1622	1700	1700
Volume to Capacity	Err	17.68	0.00	0.95	0.49
Queue Length 95th (ft)	Err	Err	0	0	0
Control Delay (s)	Err	Err	0.1	0.0	0.0
Lane LOS	F	F	A		
Approach Delay (s)	Err	Err	0.0		
Approach LOS	F	F			

Intersection Summary			
Average Delay	Err		
Intersection Capacity Utilization	71.9%	ICU Level of Service	C
Analysis Period (min)	15		

Movement	EBL	EBR	NBL	NBT	SBT	SBR
Lane Configurations						
Volume (veh/h)	40	22	18	287	182	12
Sign Control	Stop			Free	Free	
Grade	0%			0%	0%	
Peak Hour Factor	0.92	0.92	0.92	0.92	0.92	0.92
Hourly flow rate (vph)	43	24	20	312	198	13
Pedestrians						
Lane Width (ft)						
Walking Speed (ft/s)						
Percent Blockage						
Right turn flare (veh)						
Median type				None	None	
Median storage veh)						
Upstream signal (ft)						
pX, platoon unblocked						
vC, conflicting volume	555	204	211			
vC1, stage 1 conf vol						
vC2, stage 2 conf vol						
vCu, unblocked vol	555	204	211			
tC, single (s)	6.4	6.2	4.1			
tC, 2 stage (s)						
tF (s)	3.5	3.3	2.2			
p0 queue free %	91	97	99			
cM capacity (veh/h)	485	836	1360			

Direction, Lane #	EB 1	NB 1	SB 1
Volume Total	67	332	211
Volume Left	43	20	0
Volume Right	24	0	13
cSH	570	1360	1700
Volume to Capacity	0.12	0.01	0.12
Queue Length 95th (ft)	10	1	0
Control Delay (s)	12.2	0.6	0.0
Lane LOS	B	A	
Approach Delay (s)	12.2	0.6	0.0
Approach LOS	B		

Intersection Summary			
Average Delay	1.7		
Intersection Capacity Utilization	40.0%	ICU Level of Service	A
Analysis Period (min)	15		

Movement	EBL	EBR	NBL	NBT	SBT	SBR
Lane Configurations						
Volume (veh/h)	9	3	10	319	192	1
Sign Control	Stop			Free	Free	
Grade	0%			0%	0%	
Peak Hour Factor	0.92	0.92	0.92	0.92	0.92	0.92
Hourly flow rate (vph)	10	3	11	347	209	1
Pedestrians						
Lane Width (ft)						
Walking Speed (ft/s)						
Percent Blockage						
Right turn flare (veh)						
Median type				None	None	
Median storage veh)						
Upstream signal (ft)						
pX, platoon unblocked						
vC, conflicting volume	578	209	210			
vC1, stage 1 conf vol						
vC2, stage 2 conf vol						
vCu, unblocked vol	578	209	210			
tC, single (s)	6.4	6.2	4.1			
tC, 2 stage (s)						
tF (s)	3.5	3.3	2.2			
p0 queue free %	98	100	99			
cM capacity (veh/h)	474	831	1361			

Direction, Lane #	EB 1	NB 1	SB 1
Volume Total	13	358	210
Volume Left	10	11	0
Volume Right	3	0	1
cSH	531	1361	1700
Volume to Capacity	0.02	0.01	0.12
Queue Length 95th (ft)	2	1	0
Control Delay (s)	11.9	0.3	0.0
Lane LOS	B	A	
Approach Delay (s)	11.9	0.3	0.0
Approach LOS	B		

Intersection Summary			
Average Delay	0.5		
Intersection Capacity Utilization	34.9%	ICU Level of Service	A
Analysis Period (min)	15		

Movement	EBL	EBR	NBL	NBT	SBT	SBR
Lane Configurations						
Volume (veh/h)	15	17	31	295	167	1
Sign Control	Stop			Free	Free	
Grade	0%			0%	0%	
Peak Hour Factor	0.92	0.92	0.92	0.92	0.92	0.92
Hourly flow rate (vph)	16	18	34	321	182	1
Pedestrians						
Lane Width (ft)						
Walking Speed (ft/s)						
Percent Blockage						
Right turn flare (veh)						
Median type				None	None	
Median storage veh)						
Upstream signal (ft)						
pX, platoon unblocked						
vC, conflicting volume	570	182	183			
vC1, stage 1 conf vol						
vC2, stage 2 conf vol						
vCu, unblocked vol	570	182	183			
tC, single (s)	6.4	6.2	4.1			
tC, 2 stage (s)						
tF (s)	3.5	3.3	2.2			
p0 queue free %	97	98	98			
cM capacity (veh/h)	471	860	1392			

Direction, Lane #	EB 1	NB 1	SB 1
Volume Total	35	354	183
Volume Left	16	34	0
Volume Right	18	0	1
cSH	620	1392	1700
Volume to Capacity	0.06	0.02	0.11
Queue Length 95th (ft)	4	2	0
Control Delay (s)	11.1	0.9	0.0
Lane LOS	B	A	
Approach Delay (s)	11.1	0.9	0.0
Approach LOS	B		

Intersection Summary			
Average Delay	1.3		
Intersection Capacity Utilization	39.4%	ICU Level of Service	A
Analysis Period (min)	15		

Movement	EBL	EBR	NBL	NBT	SBT	SBR
Lane Configurations						
Volume (veh/h)	25	26	26	268	131	33
Sign Control	Stop			Free	Free	
Grade	0%			0%	0%	
Peak Hour Factor	0.92	0.92	0.92	0.92	0.92	0.92
Hourly flow rate (vph)	27	28	28	291	142	36
Pedestrians						
Lane Width (ft)						
Walking Speed (ft/s)						
Percent Blockage						
Right turn flare (veh)						
Median type				None	None	
Median storage veh)						
Upstream signal (ft)						
pX, platoon unblocked						
vC, conflicting volume	508	160	178			
vC1, stage 1 conf vol						
vC2, stage 2 conf vol						
vCu, unblocked vol	508	160	178			
tC, single (s)	6.4	6.2	4.1			
tC, 2 stage (s)						
tF (s)	3.5	3.3	2.2			
p0 queue free %	95	97	98			
cM capacity (veh/h)	514	885	1398			

Direction, Lane #	EB 1	NB 1	SB 1
Volume Total	55	320	178
Volume Left	27	28	0
Volume Right	28	0	36
cSH	654	1398	1700
Volume to Capacity	0.08	0.02	0.10
Queue Length 95th (ft)	7	2	0
Control Delay (s)	11.0	0.8	0.0
Lane LOS	B	A	
Approach Delay (s)	11.0	0.8	0.0
Approach LOS	B		

Intersection Summary			
Average Delay	1.6		
Intersection Capacity Utilization	37.8%	ICU Level of Service	A
Analysis Period (min)	15		

Movement	EBL	EBT	EBR	WBL	WBT	WBR	NBL	NBT	NBR	SBL	SBT	SBR
Lane Configurations												
Sign Control		Stop			Stop			Stop			Stop	
Volume (vph)	11	131	97	42	129	6	26	226	36	10	21	5
Peak Hour Factor	0.92	0.92	0.92	0.92	0.92	0.92	0.92	0.92	0.92	0.92	0.92	0.92
Hourly flow rate (vph)	12	142	105	46	140	7	28	246	39	11	23	5

Direction, Lane #	EB 1	WB 1	NB 1	SB 1
Volume Total (vph)	260	192	313	39
Volume Left (vph)	12	46	28	11
Volume Right (vph)	105	7	39	5
Hadj (s)	-0.20	0.06	-0.02	0.01
Departure Headway (s)	5.0	5.3	5.1	5.6
Degree Utilization, x	0.36	0.28	0.45	0.06
Capacity (veh/h)	675	629	655	557
Control Delay (s)	10.7	10.4	12.2	9.0
Approach Delay (s)	10.7	10.4	12.2	9.0
Approach LOS	B	B	B	A

Intersection Summary			
Delay	11.1		
HCM Level of Service	B		
Intersection Capacity Utilization	47.9%	ICU Level of Service	A
Analysis Period (min)	15		

HCM Unsignalized Intersection Capacity Analysis
1: SW 97th Ave. & SW 174th St.

2/18/2015

Movement	EBL	EBT	EBR	WBL	WBT	WBR	NBL	NBT	NBR	SBL	SBT	SBR
Lane Configurations												
Sign Control		Stop			Stop			Stop			Stop	
Volume (vph)	3	146	46	57	356	0	34	16	14	124	167	17
Peak Hour Factor	0.90	0.90	0.90	0.90	0.90	0.90	0.90	0.90	0.90	0.90	0.90	0.90
Hourly flow rate (vph)	3	162	51	63	396	0	38	18	16	138	186	19

Direction, Lane #	EB 1	WB 1	NB 1	SB 1
Volume Total (vph)	217	459	71	342
Volume Left (vph)	3	63	38	138
Volume Right (vph)	51	0	16	19
Hadj (s)	-0.10	0.06	0.01	0.08
Departure Headway (s)	6.0	5.7	6.8	6.1
Degree Utilization, x	0.36	0.73	0.13	0.58
Capacity (veh/h)	545	608	443	551
Control Delay (s)	12.4	22.7	10.8	17.3
Approach Delay (s)	12.4	22.7	10.8	17.3
Approach LOS	B	C	B	C

Intersection Summary			
Delay	18.2		
HCM Level of Service	C		
Intersection Capacity Utilization	61.5%	ICU Level of Service	B
Analysis Period (min)	15		

Lane Group	EBL	NBT	SBT	NET
Lane Group Flow (vph)	188	396	240	3070
v/c Ratio	1.04	0.86	0.61	1.02
Control Delay	156.3	63.6	74.6	58.4
Queue Delay	0.0	0.0	0.0	0.0
Total Delay	156.3	63.6	74.6	58.4
Queue Length 50th (ft)	~254	325	274	~1477
Queue Length 95th (ft)	#432	#508	379	#1524
Internal Link Dist (ft)	257	1041	665	1300
Turn Bay Length (ft)				
Base Capacity (vph)	180	461	396	3019
Starvation Cap Reductn	0	0	0	0
Spillback Cap Reductn	0	0	0	0
Storage Cap Reductn	0	0	0	0
Reduced v/c Ratio	1.04	0.86	0.61	1.02

Intersection Summary

~ Volume exceeds capacity, queue is theoretically infinite.
Queue shown is maximum after two cycles.

95th percentile volume exceeds capacity, queue may be longer.
Queue shown is maximum after two cycles.

Movement	EBL	EBR	NBL	NBT	NBR	SBT	SBR	NEL2	NEL	NET	NER
Lane Configurations											
Volume (vph)	15	165	8	17	355	204	27	5	22	2873	47
Ideal Flow (vphpl)	1900	1900	1900	1900	1900	1900	1900	1900	1900	1900	1900
Total Lost time (s)	5.0			5.0		5.0				5.0	
Lane Util. Factor	1.00			1.00		1.00				0.91	
Frt	0.88			0.87		0.98				1.00	
Flt Protected	1.00			1.00		1.00				1.00	
Satd. Flow (prot)	1626			1626		1833				5071	
Flt Permitted	1.00			0.99		1.00				1.00	
Satd. Flow (perm)	1626			1615		1833				5071	
Peak-hour factor, PHF	0.96	0.96	0.96	0.96	0.96	0.96	0.96	0.96	0.96	0.96	0.96
Adj. Flow (vph)	16	172	8	18	370	212	28	5	23	2993	49
RTOR Reduction (vph)	0	0	0	112	0	0	0	0	0	1	0
Lane Group Flow (vph)	188	0	0	284	0	240	0	0	0	3069	0
Parking (#/hr)		0									
Turn Type	NA		Perm	NA		NA		Perm	Perm	NA	
Protected Phases	3			4		8				6	
Permitted Phases			4					6	6		
Actuated Green, G (s)	21.0			41.0		41.0				113.0	
Effective Green, g (s)	21.0			41.0		41.0				113.0	
Actuated g/C Ratio	0.11			0.22		0.22				0.59	
Clearance Time (s)	5.0			5.0		5.0				5.0	
Vehicle Extension (s)	3.0			3.0		3.0				3.0	
Lane Grp Cap (vph)	180			349		396				3016	
v/s Ratio Prot	c0.12					0.13					
v/s Ratio Perm				c0.18						0.61	
v/c Ratio	1.04			0.81		0.61				1.02	
Uniform Delay, d1	84.5			70.9		67.2				38.5	
Progression Factor	1.00			1.00		1.00				1.00	
Incremental Delay, d2	79.3			18.4		6.7				21.0	
Delay (s)	163.8			89.3		74.0				59.5	
Level of Service	F			F		E				E	
Approach Delay (s)	163.8			89.3		74.0				59.5	
Approach LOS	F			F		E				E	

Intersection Summary			
HCM Average Control Delay	68.4	HCM Level of Service	E
HCM Volume to Capacity ratio	0.97		
Actuated Cycle Length (s)	190.0	Sum of lost time (s)	15.0
Intersection Capacity Utilization	110.9%	ICU Level of Service	H
Analysis Period (min)	15		

c Critical Lane Group

Movement	EBL	EBR	NBL	NBT	SBT	SBR
Lane Configurations						
Volume (veh/h)	47	95	25	313	291	82
Sign Control	Stop			Free	Free	
Grade	0%			0%	0%	
Peak Hour Factor	0.92	0.92	0.92	0.92	0.92	0.92
Hourly flow rate (vph)	51	103	27	340	316	89
Pedestrians						
Lane Width (ft)						
Walking Speed (ft/s)						
Percent Blockage						
Right turn flare (veh)						
Median type				None	None	
Median storage veh)						
Upstream signal (ft)					1121	
pX, platoon unblocked	0.92	0.92	0.92			
vC, conflicting volume	755	361	405			
vC1, stage 1 conf vol						
vC2, stage 2 conf vol						
vCu, unblocked vol	688	258	306			
tC, single (s)	6.4	6.2	4.1			
tC, 2 stage (s)						
tF (s)	3.5	3.3	2.2			
p0 queue free %	86	86	98			
cM capacity (veh/h)	369	716	1150			

Direction, Lane #	EB 1	NB 1	SB 1
Volume Total	154	367	405
Volume Left	51	27	0
Volume Right	103	0	89
cSH	546	1150	1700
Volume to Capacity	0.28	0.02	0.24
Queue Length 95th (ft)	29	2	0
Control Delay (s)	14.2	0.8	0.0
Lane LOS	B	A	
Approach Delay (s)	14.2	0.8	0.0
Approach LOS	B		

Intersection Summary			
Average Delay	2.7		
Intersection Capacity Utilization	52.2%	ICU Level of Service	A
Analysis Period (min)	15		

Movement	WBL	WBR	NBT	NBR	SBL	SBT
Lane Configurations						
Volume (veh/h)	142	58	279	43	34	301
Sign Control	Stop		Free			Free
Grade	0%		0%			0%
Peak Hour Factor	0.94	0.94	0.94	0.94	0.94	0.94
Hourly flow rate (vph)	151	62	297	46	36	320
Pedestrians						
Lane Width (ft)						
Walking Speed (ft/s)						
Percent Blockage						
Right turn flare (veh)						
Median type			None			None
Median storage veh)						
Upstream signal (ft)						
pX, platoon unblocked						
vC, conflicting volume	712	320			343	
vC1, stage 1 conf vol						
vC2, stage 2 conf vol						
vCu, unblocked vol	712	320			343	
tC, single (s)	6.4	6.2			4.1	
tC, 2 stage (s)						
tF (s)	3.5	3.3			2.2	
p0 queue free %	61	91			97	
cM capacity (veh/h)	387	721			1216	

Direction, Lane #	WB 1	NB 1	SB 1
Volume Total	213	343	356
Volume Left	151	0	36
Volume Right	62	46	0
cSH	447	1700	1216
Volume to Capacity	0.48	0.20	0.03
Queue Length 95th (ft)	63	0	2
Control Delay (s)	20.2	0.0	1.1
Lane LOS	C		A
Approach Delay (s)	20.2	0.0	1.1
Approach LOS	C		

Intersection Summary			
Average Delay	5.1		
Intersection Capacity Utilization	56.4%	ICU Level of Service	B
Analysis Period (min)	15		

Movement	EBL	EBR	NBL	NBT	SBT	SBR
Lane Configurations						
Volume (veh/h)	20	60	19	318	357	96
Sign Control	Stop			Free	Free	
Grade	0%			0%	0%	
Peak Hour Factor	0.93	0.93	0.93	0.93	0.93	0.93
Hourly flow rate (vph)	22	65	20	342	384	103
Pedestrians						
Lane Width (ft)						
Walking Speed (ft/s)						
Percent Blockage						
Right turn flare (veh)						
Median type				None	None	
Median storage veh)						
Upstream signal (ft)				1230		
pX, platoon unblocked	0.94					
vC, conflicting volume	818	435	487			
vC1, stage 1 conf vol						
vC2, stage 2 conf vol						
vCu, unblocked vol	773	435	487			
tC, single (s)	6.4	6.2	4.1			
tC, 2 stage (s)						
tF (s)	3.5	3.3	2.2			
p0 queue free %	94	90	98			
cM capacity (veh/h)	338	621	1076			

Direction, Lane #	EB 1	NB 1	SB 1
Volume Total	86	362	487
Volume Left	22	20	0
Volume Right	65	0	103
cSH	513	1076	1700
Volume to Capacity	0.17	0.02	0.29
Queue Length 95th (ft)	15	1	0
Control Delay (s)	13.4	0.7	0.0
Lane LOS	B	A	
Approach Delay (s)	13.4	0.7	0.0
Approach LOS	B		

Intersection Summary			
Average Delay	1.5		
Intersection Capacity Utilization	43.8%	ICU Level of Service	A
Analysis Period (min)	15		

Movement	EBL	EBT	EBR	WBL	WBT	WBR	NBL	NBT	NBR	SBL	SBT	SBR
Lane Configurations												
Volume (veh/h)	57	7	47	54	30	7	10	280	32	2	351	54
Sign Control		Stop			Stop			Free			Free	
Grade		0%			0%			0%			0%	
Peak Hour Factor	0.87	0.87	0.87	0.87	0.87	0.87	0.87	0.87	0.87	0.87	0.87	0.87
Hourly flow rate (vph)	66	8	54	62	34	8	11	322	37	2	403	62
Pedestrians												
Lane Width (ft)												
Walking Speed (ft/s)												
Percent Blockage												
Right turn flare (veh)												
Median type								None			None	
Median storage veh)												
Upstream signal (ft)								904				
pX, platoon unblocked	0.89	0.89		0.89	0.89	0.89				0.89		
vC, conflicting volume	828	821	434	860	833	340	466			359		
vC1, stage 1 conf vol												
vC2, stage 2 conf vol												
vCu, unblocked vol	746	738	434	782	752	199	466			219		
tC, single (s)	7.1	6.5	6.2	7.1	6.5	6.2	4.1			4.1		
tC, 2 stage (s)												
tF (s)	3.5	4.0	3.3	3.5	4.0	3.3	2.2			2.2		
p0 queue free %	75	97	91	75	88	99	99			100		
cM capacity (veh/h)	263	304	622	246	299	751	1096			1203		

Direction, Lane #	EB 1	WB 1	NB 1	SB 1
Volume Total	128	105	370	468
Volume Left	66	62	11	2
Volume Right	54	8	37	62
cSH	352	276	1096	1203
Volume to Capacity	0.36	0.38	0.01	0.00
Queue Length 95th (ft)	40	42	1	0
Control Delay (s)	21.0	25.7	0.4	0.1
Lane LOS	C	D	A	A
Approach Delay (s)	21.0	25.7	0.4	0.1
Approach LOS	C	D		

Intersection Summary			
Average Delay	5.2		
Intersection Capacity Utilization	37.9%	ICU Level of Service	A
Analysis Period (min)	15		

Movement	EBL	EBT	EBR	WBL	WBT	WBR	NBL	NBT	NBR	SBL	SBT	SBR
Lane Configurations												
Volume (veh/h)	7	3	4	19	0	0	4	320	10	1	440	6
Sign Control		Stop			Stop			Free			Free	
Grade		0%			0%			0%			0%	
Peak Hour Factor	0.91	0.91	0.91	0.91	0.91	0.91	0.91	0.91	0.91	0.91	0.91	0.91
Hourly flow rate (vph)	8	3	4	21	0	0	4	352	11	1	484	7
Pedestrians												
Lane Width (ft)												
Walking Speed (ft/s)												
Percent Blockage												
Right turn flare (veh)												
Median type								None			None	
Median storage veh)												
Upstream signal (ft)								601				
pX, platoon unblocked	0.86	0.86		0.86	0.86	0.86				0.86		
vC, conflicting volume	855	860	487	861	858	357	490			363		
vC1, stage 1 conf vol												
vC2, stage 2 conf vol												
vCu, unblocked vol	747	753	487	754	751	166	490			172		
tC, single (s)	7.1	6.5	6.2	7.1	6.5	6.2	4.1			4.1		
tC, 2 stage (s)												
tF (s)	3.5	4.0	3.3	3.5	4.0	3.3	2.2			2.2		
p0 queue free %	97	99	99	92	100	100	100			100		
cM capacity (veh/h)	281	289	581	273	290	753	1073			1203		

Direction, Lane #	EB 1	WB 1	NB 1	SB 1
Volume Total	15	21	367	491
Volume Left	8	21	4	1
Volume Right	4	0	11	7
cSH	332	273	1073	1203
Volume to Capacity	0.05	0.08	0.00	0.00
Queue Length 95th (ft)	4	6	0	0
Control Delay (s)	16.4	19.3	0.1	0.0
Lane LOS	C	C	A	A
Approach Delay (s)	16.4	19.3	0.1	0.0
Approach LOS	C	C		

Intersection Summary			
Average Delay	0.8		
Intersection Capacity Utilization	34.1%	ICU Level of Service	A
Analysis Period (min)	15		

Movement	EBL	EBT	EBR	WBL	WBT	WBR	NBL	NBT	NBR	SBL	SBT	SBR
Lane Configurations												
Volume (veh/h)	11	30	123	12	67	1	17	324	16	7	395	59
Sign Control		Stop			Stop			Free			Free	
Grade		0%			0%			0%			0%	
Peak Hour Factor	0.93	0.93	0.93	0.93	0.93	0.93	0.93	0.93	0.93	0.93	0.93	0.93
Hourly flow rate (vph)	12	32	132	13	72	1	18	348	17	8	425	63
Pedestrians												
Lane Width (ft)												
Walking Speed (ft/s)												
Percent Blockage												
Right turn flare (veh)												
Median type								None			None	
Median storage veh)												
Upstream signal (ft)								300				
pX, platoon unblocked	0.83	0.83		0.83	0.83	0.83				0.83		
vC, conflicting volume	902	874	456	1013	897	357	488			366		
vC1, stage 1 conf vol												
vC2, stage 2 conf vol												
vCu, unblocked vol	779	744	456	913	772	121	488			131		
tC, single (s)	7.1	6.5	6.2	7.1	6.5	6.2	4.1			4.1		
tC, 2 stage (s)												
tF (s)	3.5	4.0	3.3	3.5	4.0	3.3	2.2			2.2		
p0 queue free %	94	88	78	91	73	100	98			99		
cM capacity (veh/h)	202	277	604	147	267	771	1075			1205		

Direction, Lane #	EB 1	WB 1	NB 1	SB 1
Volume Total	176	86	384	496
Volume Left	12	13	18	8
Volume Right	132	1	17	63
cSH	448	240	1075	1205
Volume to Capacity	0.39	0.36	0.02	0.01
Queue Length 95th (ft)	46	39	1	0
Control Delay (s)	18.2	28.2	0.6	0.2
Lane LOS	C	D	A	A
Approach Delay (s)	18.2	28.2	0.6	0.2
Approach LOS	C	D		

Intersection Summary			
Average Delay	5.2		
Intersection Capacity Utilization	45.5%	ICU Level of Service	A
Analysis Period (min)	15		

Lane Group	EBL	EBT	EBR	WBL	WBT	NBL	NBT	SBL	SBT
Lane Group Flow (vph)	136	688	238	512	696	235	557	32	549
v/c Ratio	0.21	1.01	0.41	1.01	0.52	0.85	1.01	0.13	1.09
Control Delay	11.6	90.7	26.5	85.8	44.5	78.7	96.5	46.9	134.3
Queue Delay	0.0	0.0	0.0	0.0	0.0	0.0	0.0	0.0	0.0
Total Delay	11.6	90.7	26.5	85.8	44.5	78.7	96.5	46.9	134.3
Queue Length 50th (ft)	54	~760	114	~511	334	225	~280	27	~359
Queue Length 95th (ft)	83	#1108	200	#755	400	#369	#438	58	#490
Internal Link Dist (ft)		1915			531		229		156
Turn Bay Length (ft)	130			95		155		130	
Base Capacity (vph)	665	681	585	508	1336	277	554	249	503
Starvation Cap Reductn	0	0	0	0	0	0	0	0	0
Spillback Cap Reductn	0	0	0	0	0	0	0	0	0
Storage Cap Reductn	0	0	0	0	0	0	0	0	0
Reduced v/c Ratio	0.20	1.01	0.41	1.01	0.52	0.85	1.01	0.13	1.09

Intersection Summary

~ Volume exceeds capacity, queue is theoretically infinite.
Queue shown is maximum after two cycles.

95th percentile volume exceeds capacity, queue may be longer.
Queue shown is maximum after two cycles.

Movement	EBL	EBT	EBR	WBL	WBT	WBR	NBL	NBT	NBR	SBL	SBT	SBR
Lane Configurations												
Volume (vph)	125	633	219	471	626	15	216	260	252	29	455	50
Ideal Flow (vphpl)	1900	1900	1900	1900	1900	1900	1900	1900	1900	1900	1900	1900
Total Lost time (s)	3.0	3.0	5.0	3.0	3.0		3.0	3.0		3.0	3.0	
Lane Util. Factor	1.00	1.00	1.00	1.00	0.95		1.00	0.95		1.00	0.95	
Frt	1.00	1.00	0.85	1.00	1.00		1.00	0.93		1.00	0.99	
Flt Protected	0.95	1.00	1.00	0.95	1.00		0.95	1.00		0.95	1.00	
Satd. Flow (prot)	1770	1863	1583	1770	3527		1770	3278		1770	3487	
Flt Permitted	0.27	1.00	1.00	0.08	1.00		0.24	1.00		0.26	1.00	
Satd. Flow (perm)	496	1863	1583	145	3527		438	3278		486	3487	
Peak-hour factor, PHF	0.92	0.92	0.92	0.92	0.92	0.92	0.92	0.92	0.92	0.92	0.92	0.92
Adj. Flow (vph)	136	688	238	512	680	16	235	283	274	32	495	54
RTOR Reduction (vph)	0	0	76	0	1	0	0	100	0	0	4	0
Lane Group Flow (vph)	136	688	162	512	695	0	235	457	0	32	545	0
Turn Type	pm+pt	NA	custom	pm+pt	NA		custom	NA		custom	NA	
Protected Phases	1 2	2 4		1 3	3 4		5 6	6 8		5 7	7 8	
Permitted Phases	2 4		4	3 4			8			8		
Actuated Green, G (s)	106.7	62.7	57.0	103.0	65.0		40.0	22.0		36.0	24.0	
Effective Green, g (s)	106.7	62.7	57.0	103.0	65.0		40.0	22.0		36.0	24.0	
Actuated g/C Ratio	0.60	0.35	0.32	0.58	0.37		0.23	0.12		0.20	0.14	
Clearance Time (s)			5.0									
Vehicle Extension (s)			3.0									
Lane Grp Cap (vph)	654	657	508	505	1290		271	406		236	471	
v/s Ratio Prot	0.06	c0.37		c0.26	0.20		c0.11	0.14		0.01	c0.16	
v/s Ratio Perm	0.07		0.10	0.33			0.08			0.01		
v/c Ratio	0.21	1.05	0.32	1.01	0.54		0.87	1.13		0.14	1.16	
Uniform Delay, d1	16.5	57.5	45.7	56.4	44.5		62.1	77.8		57.7	76.8	
Progression Factor	1.00	1.00	1.00	1.00	1.00		1.00	1.00		1.00	1.00	
Incremental Delay, d2	0.2	48.1	0.4	43.6	0.4		24.0	83.5		0.3	92.0	
Delay (s)	16.6	105.6	46.0	99.9	45.0		86.1	161.4		57.9	168.9	
Level of Service	B	F	D	F	D		F	F		E	F	
Approach Delay (s)		80.8			68.3			139.0			162.7	
Approach LOS		F			E			F			F	

Intersection Summary			
HCM Average Control Delay	102.4	HCM Level of Service	F
HCM Volume to Capacity ratio	1.00		
Actuated Cycle Length (s)	177.7	Sum of lost time (s)	18.0
Intersection Capacity Utilization	98.9%	ICU Level of Service	F
Analysis Period (min)	15		
c Critical Lane Group			

Movement	EBL	EBT	WBT	WBR	SBL	SBR
Lane Configurations						
Volume (veh/h)	345	727	872	32	86	258
Sign Control		Free	Free		Stop	
Grade		0%	0%		0%	
Peak Hour Factor	0.96	0.96	0.96	0.96	0.96	0.96
Hourly flow rate (vph)	359	757	908	33	90	269
Pedestrians						
Lane Width (ft)						
Walking Speed (ft/s)						
Percent Blockage						
Right turn flare (veh)						
Median type		None	None			
Median storage veh)						
Upstream signal (ft)		611				
pX, platoon unblocked					0.68	
vC, conflicting volume	942				2401	925
vC1, stage 1 conf vol						
vC2, stage 2 conf vol						
vCu, unblocked vol	942				2822	925
tC, single (s)	4.1				6.4	6.2
tC, 2 stage (s)						
tF (s)	2.2				3.5	3.3
p0 queue free %	51				0	18
cM capacity (veh/h)	728				7	326

Direction, Lane #	EB 1	EB 2	WB 1	SB 1
Volume Total	359	757	942	358
Volume Left	359	0	0	90
Volume Right	0	0	33	269
cSH	728	1700	1700	26
Volume to Capacity	0.49	0.45	0.55	14.03
Queue Length 95th (ft)	69	0	0	Err
Control Delay (s)	14.7	0.0	0.0	Err
Lane LOS	B			F
Approach Delay (s)	4.7		0.0	Err
Approach LOS				F

Intersection Summary			
Average Delay	1484.8		
Intersection Capacity Utilization	97.6%	ICU Level of Service	F
Analysis Period (min)	15		

Lane Group	EBL	EBT	WBL	WBT	NBL	NBT	SBL	SBT
Lane Group Flow (vph)	436	712	323	657	92	2367	317	4012
v/c Ratio	1.20	0.99	1.41	1.38	1.06	1.04	1.46	1.52
Control Delay	174.1	103.7	261.9	239.2	147.0	77.9	272.5	267.5
Queue Delay	0.0	0.0	0.0	0.0	0.0	0.0	0.0	0.0
Total Delay	174.1	103.7	261.9	239.2	147.0	77.9	272.5	267.5
Queue Length 50th (ft)	~657	470	~592	~594	~73	~1149	~490	~2547
Queue Length 95th (ft)	#892	#614	#830	#737	#211	#1223	#706	#2554
Internal Link Dist (ft)		364		1915		469		768
Turn Bay Length (ft)			286		160		130	
Base Capacity (vph)	363	721	229	475	87	2281	217	2643
Starvation Cap Reductn	0	0	0	0	0	0	0	0
Spillback Cap Reductn	0	0	0	0	0	0	0	0
Storage Cap Reductn	0	0	0	0	0	0	0	0
Reduced v/c Ratio	1.20	0.99	1.41	1.38	1.06	1.04	1.46	1.52

Intersection Summary

~ Volume exceeds capacity, queue is theoretically infinite.
Queue shown is maximum after two cycles.

95th percentile volume exceeds capacity, queue may be longer.
Queue shown is maximum after two cycles.

Movement	EBL	EBT	EBR	WBL	WBT	WBR	NBL	NBT	NBR	SBL	SBT	SBR
Lane Configurations												
Volume (vph)	401	596	59	381	447	74	85	1720	457	292	2907	784
Ideal Flow (vphpl)	1900	1900	1900	1900	1900	1900	1900	1900	1900	1900	1900	1900
Total Lost time (s)	5.0	5.0		5.0	5.0		3.0	5.0		3.0	5.0	
Lane Util. Factor	1.00	0.95		0.91	0.91		1.00	0.91		1.00	0.91	
Frt	1.00	0.99		1.00	0.98		1.00	0.97		1.00	0.97	
Flt Protected	0.95	1.00		0.95	0.99		0.95	1.00		0.95	1.00	
Satd. Flow (prot)	1770	3491		1610	3305		1770	4925		1770	4923	
Flt Permitted	0.95	1.00		0.95	0.99		0.05	1.00		0.04	1.00	
Satd. Flow (perm)	1770	3491		1610	3305		86	4925		83	4923	
Peak-hour factor, PHF	0.92	0.92	0.92	0.92	0.92	0.92	0.92	0.92	0.92	0.92	0.92	0.92
Adj. Flow (vph)	436	648	64	414	486	80	92	1870	497	317	3160	852
RTOR Reduction (vph)	0	4	0	0	5	0	0	25	0	0	26	0
Lane Group Flow (vph)	436	708	0	323	652	0	92	2342	0	317	3986	0
Turn Type	Split	NA		Split	NA		pm+pt	NA		pm+pt	NA	
Protected Phases	4	4		8	8		5	2		1	6	
Permitted Phases							2			6		
Actuated Green, G (s)	39.0	39.0		27.0	27.0		92.0	87.0		109.0	101.0	
Effective Green, g (s)	39.0	39.0		27.0	27.0		92.0	87.0		109.0	101.0	
Actuated g/C Ratio	0.21	0.21		0.14	0.14		0.48	0.46		0.57	0.53	
Clearance Time (s)	5.0	5.0		5.0	5.0		3.0	5.0		3.0	5.0	
Vehicle Extension (s)	3.0	3.0		3.0	3.0		3.0	3.0		3.0	3.0	
Lane Grp Cap (vph)	363	717		229	470		86	2255		216	2617	
v/s Ratio Prot	c0.25	0.20		c0.20	0.20		0.03	0.48		c0.15	c0.81	
v/s Ratio Perm							0.49			0.70		
v/c Ratio	1.20	0.99		1.41	1.39		1.07	1.04		1.47	1.52	
Uniform Delay, d1	75.5	75.3		81.5	81.5		45.8	51.5		68.7	44.5	
Progression Factor	1.00	1.00		1.00	1.00		1.00	1.00		1.00	1.00	
Incremental Delay, d2	114.0	30.2		208.6	186.9		117.3	29.9		233.9	237.4	
Delay (s)	189.5	105.4		290.1	268.4		163.1	81.4		302.6	281.9	
Level of Service	F	F		F	F		F	F		F	F	
Approach Delay (s)		137.4			275.6			84.4			283.4	
Approach LOS		F			F			F			F	

Intersection Summary			
HCM Average Control Delay	208.9	HCM Level of Service	F
HCM Volume to Capacity ratio	1.41		
Actuated Cycle Length (s)	190.0	Sum of lost time (s)	13.0
Intersection Capacity Utilization	133.6%	ICU Level of Service	H
Analysis Period (min)	15		
c Critical Lane Group			

Movement	EBL	EBT	EBR	WBL	WBT	WBR	NBL	NBT	NBR	SBL	SBT	SBR
Lane Configurations												
Volume (vph)	401	596	59	381	447	74	85	1720	457	292	2907	784
Movement Number	7	4	14	3	8	18	5	2	12	1	6	16
Initial Queue, veh	0	0	0	0	0	0	0	0	0	0	0	0
Ped-Bike Adj. Factor (A_pbT)	1.00		1.00	1.00		1.00	1.00		1.00	1.00		1.00
Parking, Bus Adj. Factors	1.00	1.00	1.00	1.00	1.00	1.00	1.00	1.00	1.00	1.00	1.00	1.00
Adj. Sat. Flow Rate, veh/h/ln	1863	1863	1863	1863	1863	1863	1863	1863	1863	1863	1863	1863
Lanes	1	2	0	1	2	0	1	3	0	1	3	0
Lane Assignment												
Capacity, veh/h	364	685	68	252	443	73	85	1847	475	215	2161	536
Proportion Arriving On Green	0.21	0.21	0.21	0.14	0.14	0.14	0.03	0.46	0.46	0.10	0.53	0.53
Movement Delay, s/veh	187.8	106.5	107.7	387.9	163.5	168.0	171.1	75.8	96.6	308.7	244.3	314.7
Movement LOS	F	F	F	F	F	F	F	F	F	F	F	F
Approach Volume, veh/h		1148			980			2459			4329	
Approach Delay, s/veh		137.8			259.6			86.2			272.1	
Approach LOS		F			F			F			F	

Timer:	1	2	3	4	5	6	7	8
Assigned Phase	1	2	8	4	5	6		
Case No	1.1	4.0	10.0	10.0	1.1	4.0		
Phase Duration (G+Y+Rc), s	22.00	92.00	32.00	44.00	8.00	106.00		
Change Period (Y+Rc), s	3.00	5.00	5.00	5.00	3.00	5.00		
Max. Allowable Headway (MAH), s	4.00	3.99	3.97	3.96	4.00	3.99		
Maximum Green Setting (Gmax), s	19.00	87.00	27.00	39.00	5.00	101.00		
Max. Queue Clearance Time (g_c+I1), s	21.00	89.00	29.00	41.00	7.00	103.00		
Green Extension Time (g_e), s	0.00	0.00	0.00	0.00	0.00	0.00		
Probability of Phase Call (p_c)	1.000	1.000	1.000	1.000	0.992	1.000		
Probability of Max Out (p_x)	1.000	1.000	1.000	1.000	1.000	1.000		

Left-Turn Movement Data					
Assigned Movement	1		3	7	5
Mvmt. Sat Flow, veh/h	1774.04		1774.04	1774.04	1774.04

Through Movement Data					
Assigned Movement		2	8	4	6
Mvmt. Sat Flow, veh/h		4032.61	3120.77	3337.31	4065.76

Right-Turn Movement Data					
Assigned Movement		12	18	14	16
Mvmt. Sat Flow, veh/h		1037.28	514.01	329.96	1009.10

Left Lane Group Data								
Assigned Movement	1	0	3	7	5	0	0	0
Lane Assignment	L (Pr/Pm)		L	LL (Pr/Pm)				
Lanes in Group	1	0	1	1	1	0	0	0
Group Volume (v), veh/h	317.4	0.0	414.1	435.9	92.4	0.0	0.0	0.0
Group Sat. Flow (s), veh/h/ln	1774.0	0.0	1774.0	1774.0	1774.0	0.0	0.0	0.0
Queue Serve Time (g_s), s	19.0	0.0	27.0	39.0	5.0	0.0	0.0	0.0
Cycle Queue Clear Time (g_c), s	19.0	0.0	27.0	39.0	5.0	0.0	0.0	0.0

Perm LT Sat Flow Rate (s_l), veh/h/ln	149.3	0.0	1774.0	1774.0	27.8	0.0	0.0	0.0
Shared LT Sat Flow (s_sh), veh/h/ln	0.0	0.0	0.0	0.0	0.0	0.0	0.0	0.0
Perm LT Eff. Green (g_p), s	103.0	0.0	0.0	0.0	87.0	0.0	0.0	0.0
Perm LT Serve Time (g_u), s	0.0	0.0	0.0	0.0	2.0	0.0	0.0	0.0
Perm LT Que Serve Time (g_ps), s	0.0	0.0	0.0	0.0	2.0	0.0	0.0	0.0
Time to First Blk (g_f), s	0.0	0.0	0.0	0.0	0.0	0.0	0.0	0.0
Serve Time pre Blk (g_fs), s	0.0	0.0	0.0	0.0	0.0	0.0	0.0	0.0
Proportion LT Inside Lane (P_L)	1.000	0.000	1.000	1.000	1.000	0.000	0.000	0.000
Lane Group Capacity (c), veh/h	215.3	0.0	252.1	364.1	84.9	0.0	0.0	0.0
Volume-to-Capacity Ratio (X)	1.474	0.000	1.643	1.197	1.089	0.000	0.000	0.000
Available Capacity (c_a), veh/h	215.3	0.0	252.1	364.1	84.9	0.0	0.0	0.0
Upstream Filter Factor (I)	1.000	0.000	1.000	1.000	1.000	0.000	0.000	0.000
Uniform Delay (d1), s/veh	71.9	0.0	81.5	75.5	47.3	0.0	0.0	0.0
Incremental Delay (d2), s/veh	236.8	0.0	306.4	112.3	123.8	0.0	0.0	0.0
Initial Queue Delay (d3), s/veh	0.0	0.0	0.0	0.0	0.0	0.0	0.0	0.0
Control Delay (d), s/veh	308.7	0.0	387.9	187.8	171.1	0.0	0.0	0.0
First-Term Queue (Q1), veh/ln	8.7	0.0	12.5	17.9	2.2	0.0	0.0	0.0
Second-Term Queue (Q2), veh/ln	14.2	0.0	21.5	11.4	2.9	0.0	0.0	0.0
Third-Term Queue (Q3), veh/ln	0.0	0.0	0.0	0.0	0.0	0.0	0.0	0.0
Percentile bk-of-que factor (f_B%)	1.000	0.000	1.000	1.000	1.000	0.000	0.000	0.000
Percentile Back of Queue (Q%), veh/ln	22.8	0.0	33.9	29.3	5.1	0.0	0.0	0.0
Percentile Storage Ratio (RQ%)	4.46	0.00	3.01	2.15	0.81	0.00	0.00	0.00
Initial Queue (Qb), veh	0.0	0.0	0.0	0.0	0.0	0.0	0.0	0.0
Final (Residual) Queue (Qe), veh	25.5	0.0	40.5	17.9	1.9	0.0	0.0	0.0
Saturated Delay (ds), s/veh	0.0	0.0	0.0	0.0	0.0	0.0	0.0	0.0
Saturated Queue (Qs), veh	0.0	0.0	0.0	0.0	0.0	0.0	0.0	0.0
Saturated Capacity (cs), veh/h	0.0	0.0	0.0	0.0	0.0	0.0	0.0	0.0
Initial Queue Clear Time (tc), h	0.4	0.0	0.4	0.3	0.3	0.0	0.0	0.0

Middle Lane Group Data								
Assigned Movement	0	2	8	4	0	6	0	0
Lane Assignment		T	T	T		T		
Lanes in Group	0	2	1	1	0	2	0	0
Group Volume (v), veh/h	0.0	1561.9	289.0	361.2	0.0	2589.3	0.0	0.0
Group Sat. Flow (s), veh/h/ln	0.0	1695.1	1862.7	1862.7	0.0	1695.1	0.0	0.0
Queue Serve Time (g_s), s	0.0	87.0	27.0	36.3	0.0	101.0	0.0	0.0
Cycle Queue Clear Time (g_c), s	0.0	87.0	27.0	36.3	0.0	101.0	0.0	0.0
Lane Group Capacity (c), veh/h	0.0	1552.4	264.7	382.4	0.0	1802.2	0.0	0.0
Volume-to-Capacity Ratio (X)	0.000	1.006	1.092	0.945	0.000	1.437	0.000	0.000
Available Capacity (c_a), veh/h	0.0	1552.4	264.7	382.4	0.0	1802.2	0.0	0.0
Upstream Filter Factor (I)	0.000	1.000	1.000	1.000	0.000	1.000	0.000	0.000
Uniform Delay (d1), s/veh	0.0	51.5	81.5	74.4	0.0	44.5	0.0	0.0
Incremental Delay (d2), s/veh	0.0	24.3	82.0	32.1	0.0	199.8	0.0	0.0
Initial Queue Delay (d3), s/veh	0.0	0.0	0.0	0.0	0.0	0.0	0.0	0.0
Control Delay (d), s/veh	0.0	75.8	163.5	106.5	0.0	244.3	0.0	0.0
First-Term Queue (Q1), veh/ln	0.0	36.8	13.1	17.5	0.0	42.0	0.0	0.0
Second-Term Queue (Q2), veh/ln	0.0	5.2	6.0	3.4	0.0	50.0	0.0	0.0
Third-Term Queue (Q3), veh/ln	0.0	0.0	0.0	0.0	0.0	0.0	0.0	0.0
Percentile bk-of-que factor (f_B%)	0.000	1.000	1.000	1.000	0.000	1.000	0.000	0.000
Percentile Back of Queue (Q%), veh/ln	0.0	42.1	19.1	20.9	0.0	92.0	0.0	0.0
Percentile Storage Ratio (RQ%)	0.00	2.34	0.26	1.54	0.00	3.19	0.00	0.00

Initial Queue (Qb), veh	0.0	0.0	0.0	0.0	0.0	0.0	0.0	0.0
Final (Residual) Queue (Qe), veh	0.0	2.4	6.1	0.0	0.0	196.8	0.0	0.0
Saturated Delay (ds), s/veh	0.0	0.0	0.0	0.0	0.0	0.0	0.0	0.0
Saturated Queue (Qs), veh	0.0	0.0	0.0	0.0	0.0	0.0	0.0	0.0
Saturated Capacity (cs), veh/h	0.0	0.0	0.0	0.0	0.0	0.0	0.0	0.0
Initial Queue Clear Time (tc), h	0.0	0.3	0.3	0.0	0.0	0.4	0.0	0.0
Right Lane Group Data								
Assigned Movement	0	12	18	14	0	16	0	0
Lane Assignment		T+R	T+R	T+R		T+R		
Lanes in Group	0	1	1	1	0	1	0	0
Group Volume (v), veh/h	0.0	804.4	277.3	350.7	0.0	1422.7	0.0	0.0
Group Sat. Flow (s), veh/h/ln	0.0	1679.7	1772.0	1804.5	0.0	1684.7	0.0	0.0
Queue Serve Time (g_s), s	0.0	87.0	27.0	36.4	0.0	101.0	0.0	0.0
Cycle Queue Clear Time (g_c), s	0.0	87.0	27.0	36.4	0.0	101.0	0.0	0.0
Prot RT Sat Flow Rate (s_R), veh/h/ln	0.0	0.0	0.0	0.0	0.0	0.0	0.0	0.0
Prot RT Eff. Green (g_R), s	0.0	0.0	0.0	0.0	0.0	0.0	0.0	0.0
Proportion RT Outside Lane (P_R)	0.000	0.618	0.290	0.183	0.000	0.599	0.000	0.000
Lane Group Capacity (c), veh/h	0.0	769.1	251.8	370.4	0.0	895.5	0.0	0.0
Volume-to-Capacity Ratio (X)	0.000	1.046	1.101	0.947	0.000	1.589	0.000	0.000
Available Capacity (c_a), veh/h	0.0	769.1	251.8	370.4	0.0	895.5	0.0	0.0
Upstream Filter Factor (I)	0.000	1.000	1.000	1.000	0.000	1.000	0.000	0.000
Uniform Delay (d1), s/veh	0.0	51.5	81.5	74.5	0.0	44.5	0.0	0.0
Incremental Delay (d2), s/veh	0.0	45.1	86.5	33.2	0.0	270.2	0.0	0.0
Initial Queue Delay (d3), s/veh	0.0	0.0	0.0	0.0	0.0	0.0	0.0	0.0
Control Delay (d), s/veh	0.0	96.6	168.0	107.7	0.0	314.7	0.0	0.0
First-Term Queue (Q1), veh/ln	0.0	36.5	12.4	17.0	0.0	41.8	0.0	0.0
Second-Term Queue (Q2), veh/ln	0.0	9.6	6.0	3.4	0.0	67.2	0.0	0.0
Third-Term Queue (Q3), veh/ln	0.0	0.0	0.0	0.0	0.0	0.0	0.0	0.0
Percentile bk-of-que factor (f_B%)	0.000	1.000	1.000	1.000	0.000	1.000	0.000	0.000
Percentile Back of Queue (Q%), veh/ln	0.0	46.1	18.5	20.4	0.0	109.0	0.0	0.0
Percentile Storage Ratio (RQ%)	0.00	2.56	0.25	1.50	0.00	3.78	0.00	0.00
Initial Queue (Qb), veh	0.0	0.0	0.0	0.0	0.0	0.0	0.0	0.0
Final (Residual) Queue (Qe), veh	0.0	8.8	6.4	0.0	0.0	131.8	0.0	0.0
Saturated Delay (ds), s/veh	0.0	0.0	0.0	0.0	0.0	0.0	0.0	0.0
Saturated Queue (Qs), veh	0.0	0.0	0.0	0.0	0.0	0.0	0.0	0.0
Saturated Capacity (cs), veh/h	0.0	0.0	0.0	0.0	0.0	0.0	0.0	0.0
Initial Queue Clear Time (tc), h	0.0	0.3	0.3	0.0	0.0	0.4	0.0	0.0

Intersection Summary	
HCM Average Control Delay	202.2
HCM Level of Service	F

Movement	EBL	EBT	EBR	WBL	WBT	WBR	NEL	NET	NER	SWL	SWT	SWR
Lane Configurations												
Volume (veh/h)	32	30	0	0	33	40	42	2474	44	0	0	0
Sign Control		Stop			Stop			Free			Free	
Grade		0%			0%			0%			0%	
Peak Hour Factor	0.93	0.93	0.93	0.93	0.93	0.93	0.93	0.93	0.93	0.93	0.93	0.93
Hourly flow rate (vph)	34	32	0	0	35	43	45	2660	47	0	0	0
Pedestrians												
Lane Width (ft)												
Walking Speed (ft/s)												
Percent Blockage												
Right turn flare (veh)												
Median type								None			None	
Median storage veh)												
Upstream signal (ft)												
pX, platoon unblocked												
vC, conflicting volume	1038	2798	0	2790	2774	910	0			2708		
vC1, stage 1 conf vol												
vC2, stage 2 conf vol												
vCu, unblocked vol	1038	2798	0	2790	2774	910	0			2708		
tC, single (s)	7.5	6.5	6.9	7.5	6.5	6.9	4.1			4.1		
tC, 2 stage (s)												
tF (s)	3.5	4.0	3.3	3.5	4.0	3.3	2.2			2.2		
p0 queue free %	0	0	100	0	0	84	97			100		
cM capacity (veh/h)	0	18	1084	0	18	277	1622			148		

Direction, Lane #	EB 1	WB 1	NE 1	NE 2	NE 3
Volume Total	67	78	710	1330	712
Volume Left	34	0	45	0	0
Volume Right	0	43	0	0	47
cSH	0	37	1622	1700	1700
Volume to Capacity	Err	2.10	0.03	0.78	0.42
Queue Length 95th (ft)	Err	214	2	0	0
Control Delay (s)	Err	736.6	0.8	0.0	0.0
Lane LOS	F	F	A		
Approach Delay (s)	Err	736.6	0.2		
Approach LOS	F	F			

Intersection Summary			
Average Delay	Err		
Intersection Capacity Utilization	66.3%	ICU Level of Service	C
Analysis Period (min)	15		

Movement	EBL	EBT	EBR	WBL	WBT	WBR	NEL	NET	NER	SWL	SWT	SWR
Lane Configurations												
Volume (veh/h)	6	33	0	0	136	27	6	2614	21	0	0	0
Sign Control		Stop			Stop			Free			Free	
Grade		0%			0%			0%			0%	
Peak Hour Factor	0.91	0.91	0.91	0.91	0.91	0.91	0.91	0.91	0.91	0.91	0.91	0.91
Hourly flow rate (vph)	7	36	0	0	149	30	7	2873	23	0	0	0
Pedestrians												
Lane Width (ft)												
Walking Speed (ft/s)												
Percent Blockage												
Right turn flare (veh)												
Median type								None			None	
Median storage veh)												
Upstream signal (ft)												
pX, platoon unblocked												
vC, conflicting volume	1075	2909	0	2915	2897	969	0			2896		
vC1, stage 1 conf vol												
vC2, stage 2 conf vol												
vCu, unblocked vol	1075	2909	0	2915	2897	969	0			2896		
tC, single (s)	7.5	6.5	6.9	7.5	6.5	6.9	4.1			4.1		
tC, 2 stage (s)												
tF (s)	3.5	4.0	3.3	3.5	4.0	3.3	2.2			2.2		
p0 queue free %	0	0	100	0	0	88	100			100		
cM capacity (veh/h)	0	15	1084	0	16	253	1622			125		

Direction, Lane #	EB 1	WB 1	NE 1	NE 2	NE 3
Volume Total	43	179	725	1436	741
Volume Left	7	0	7	0	0
Volume Right	0	30	0	0	23
cSH	0	18	1622	1700	1700
Volume to Capacity	Err	9.73	0.00	0.84	0.44
Queue Length 95th (ft)	Err	Err	0	0	0
Control Delay (s)	Err	Err	0.1	0.0	0.0
Lane LOS	F	F	A		
Approach Delay (s)	Err	Err	0.0		
Approach LOS	F	F			

Intersection Summary			
Average Delay	Err		
Intersection Capacity Utilization	66.6%	ICU Level of Service	C
Analysis Period (min)	15		

Movement	EBL	EBR	NBL	NBT	SBT	SBR
Lane Configurations						
Volume (veh/h)	40	21	18	304	288	14
Sign Control	Stop			Free	Free	
Grade	0%			0%	0%	
Peak Hour Factor	0.92	0.92	0.92	0.92	0.92	0.92
Hourly flow rate (vph)	43	23	20	330	313	15
Pedestrians						
Lane Width (ft)						
Walking Speed (ft/s)						
Percent Blockage						
Right turn flare (veh)						
Median type				None	None	
Median storage veh)						
Upstream signal (ft)						
pX, platoon unblocked						
vC, conflicting volume	690	321	328			
vC1, stage 1 conf vol						
vC2, stage 2 conf vol						
vCu, unblocked vol	690	321	328			
tC, single (s)	6.4	6.2	4.1			
tC, 2 stage (s)						
tF (s)	3.5	3.3	2.2			
p0 queue free %	89	97	98			
cM capacity (veh/h)	404	720	1231			

Direction, Lane #	EB 1	NB 1	SB 1
Volume Total	66	350	328
Volume Left	43	20	0
Volume Right	23	0	15
cSH	476	1231	1700
Volume to Capacity	0.14	0.02	0.19
Queue Length 95th (ft)	12	1	0
Control Delay (s)	13.8	0.6	0.0
Lane LOS	B	A	
Approach Delay (s)	13.8	0.6	0.0
Approach LOS	B		

Intersection Summary			
Average Delay	1.5		
Intersection Capacity Utilization	40.9%	ICU Level of Service	A
Analysis Period (min)	15		

Movement	EBL	EBR	NBL	NBT	SBT	SBR
Lane Configurations						
Volume (veh/h)	8	2	9	340	302	1
Sign Control	Stop			Free	Free	
Grade	0%			0%	0%	
Peak Hour Factor	0.92	0.92	0.92	0.92	0.92	0.92
Hourly flow rate (vph)	9	2	10	370	328	1
Pedestrians						
Lane Width (ft)						
Walking Speed (ft/s)						
Percent Blockage						
Right turn flare (veh)						
Median type				None	None	
Median storage veh)						
Upstream signal (ft)						
pX, platoon unblocked						
vC, conflicting volume	718	329	329			
vC1, stage 1 conf vol						
vC2, stage 2 conf vol						
vCu, unblocked vol	718	329	329			
tC, single (s)	6.4	6.2	4.1			
tC, 2 stage (s)						
tF (s)	3.5	3.3	2.2			
p0 queue free %	98	100	99			
cM capacity (veh/h)	393	713	1230			

Direction, Lane #	EB 1	NB 1	SB 1
Volume Total	11	379	329
Volume Left	9	10	0
Volume Right	2	0	1
cSH	431	1230	1700
Volume to Capacity	0.03	0.01	0.19
Queue Length 95th (ft)	2	1	0
Control Delay (s)	13.6	0.3	0.0
Lane LOS	B	A	
Approach Delay (s)	13.6	0.3	0.0
Approach LOS	B		

Intersection Summary			
Average Delay	0.4		
Intersection Capacity Utilization	35.1%	ICU Level of Service	A
Analysis Period (min)	15		

Movement	EBL	EBR	NBL	NBT	SBT	SBR
Lane Configurations						
Volume (veh/h)	20	18	29	310	262	3
Sign Control	Stop			Free	Free	
Grade	0%			0%	0%	
Peak Hour Factor	0.92	0.92	0.92	0.92	0.92	0.92
Hourly flow rate (vph)	22	20	32	337	285	3
Pedestrians						
Lane Width (ft)						
Walking Speed (ft/s)						
Percent Blockage						
Right turn flare (veh)						
Median type				None	None	
Median storage veh)						
Upstream signal (ft)						
pX, platoon unblocked						
vC, conflicting volume	686	286	288			
vC1, stage 1 conf vol						
vC2, stage 2 conf vol						
vCu, unblocked vol	686	286	288			
tC, single (s)	6.4	6.2	4.1			
tC, 2 stage (s)						
tF (s)	3.5	3.3	2.2			
p0 queue free %	95	97	98			
cM capacity (veh/h)	403	753	1274			

Direction, Lane #	EB 1	NB 1	SB 1
Volume Total	41	368	288
Volume Left	22	32	0
Volume Right	20	0	3
cSH	516	1274	1700
Volume to Capacity	0.08	0.02	0.17
Queue Length 95th (ft)	6	2	0
Control Delay (s)	12.6	0.9	0.0
Lane LOS	B	A	
Approach Delay (s)	12.6	0.9	0.0
Approach LOS	B		

Intersection Summary			
Average Delay	1.2		
Intersection Capacity Utilization	45.2%	ICU Level of Service	A
Analysis Period (min)	15		

Movement	EBL	EBR	NBL	NBT	SBT	SBR
Lane Configurations						
Volume (veh/h)	34	32	40	264	192	34
Sign Control	Stop			Free	Free	
Grade	0%			0%	0%	
Peak Hour Factor	0.92	0.92	0.92	0.92	0.92	0.92
Hourly flow rate (vph)	37	35	43	287	209	37
Pedestrians						
Lane Width (ft)						
Walking Speed (ft/s)						
Percent Blockage						
Right turn flare (veh)						
Median type				None	None	
Median storage veh)						
Upstream signal (ft)						
pX, platoon unblocked						
vC, conflicting volume	601	227	246			
vC1, stage 1 conf vol						
vC2, stage 2 conf vol						
vCu, unblocked vol	601	227	246			
tC, single (s)	6.4	6.2	4.1			
tC, 2 stage (s)						
tF (s)	3.5	3.3	2.2			
p0 queue free %	92	96	97			
cM capacity (veh/h)	448	812	1320			

Direction, Lane #	EB 1	NB 1	SB 1
Volume Total	72	330	246
Volume Left	37	43	0
Volume Right	35	0	37
cSH	572	1320	1700
Volume to Capacity	0.13	0.03	0.14
Queue Length 95th (ft)	11	3	0
Control Delay (s)	12.2	1.3	0.0
Lane LOS	B	A	
Approach Delay (s)	12.2	1.3	0.0
Approach LOS	B		

Intersection Summary			
Average Delay	2.0		
Intersection Capacity Utilization	42.1%	ICU Level of Service	A
Analysis Period (min)	15		

Movement	EBL	EBT	EBR	WBL	WBT	WBR	NBL	NBT	NBR	SBL	SBT	SBR
Lane Configurations												
Sign Control		Stop			Stop			Stop			Stop	
Volume (vph)	10	135	106	46	171	4	33	250	37	9	18	4
Peak Hour Factor	0.92	0.92	0.92	0.92	0.92	0.92	0.92	0.92	0.92	0.92	0.92	0.92
Hourly flow rate (vph)	11	147	115	50	186	4	36	272	40	10	20	4

Direction, Lane #	EB 1	WB 1	NB 1	SB 1
Volume Total (vph)	273	240	348	34
Volume Left (vph)	11	50	36	10
Volume Right (vph)	115	4	40	4
Hadj (s)	-0.21	0.06	-0.01	0.01
Departure Headway (s)	5.2	5.5	5.3	5.9
Degree Utilization, x	0.39	0.37	0.51	0.06
Capacity (veh/h)	648	612	634	502
Control Delay (s)	11.5	11.6	13.8	9.3
Approach Delay (s)	11.5	11.6	13.8	9.3
Approach LOS	B	B	B	A

Intersection Summary			
Delay	12.3		
HCM Level of Service	B		
Intersection Capacity Utilization	54.5%	ICU Level of Service	A
Analysis Period (min)	15		

Appendix K

2025 Total Traffic, w Imp.

2035 Total Traffic, w Imp.

2045 Total Traffic, w Imp.

Synchro Output Sheets

HCM Unsignalized Intersection Capacity Analysis
1: SW 97th Ave. & SW 174th St.

2/18/2015

Movement	EBL	EBT	EBR	WBL	WBT	WBR	NBL	NBT	NBR	SBL	SBT	SBR
Lane Configurations												
Sign Control		Stop			Stop			Stop			Stop	
Volume (vph)	3	129	25	26	96	0	20	14	11	23	69	1
Peak Hour Factor	0.84	0.84	0.84	0.84	0.84	0.84	0.84	0.84	0.84	0.84	0.84	0.84
Hourly flow rate (vph)	4	154	30	31	114	0	24	17	13	27	82	1

Direction, Lane #	EB 1	WB 1	NB 1	SB 1
Volume Total (vph)	187	145	54	111
Volume Left (vph)	4	31	24	27
Volume Right (vph)	30	0	13	1
Hadj (s)	-0.06	0.08	-0.02	0.08
Departure Headway (s)	4.4	4.6	4.8	4.8
Degree Utilization, x	0.23	0.19	0.07	0.15
Capacity (veh/h)	779	740	690	691
Control Delay (s)	8.7	8.7	8.2	8.7
Approach Delay (s)	8.7	8.7	8.2	8.7
Approach LOS	A	A	A	A

Intersection Summary			
Delay	8.6		
HCM Level of Service	A		
Intersection Capacity Utilization	30.4%	ICU Level of Service	A
Analysis Period (min)	15		

Lane Group	EBL	EBR	NBL	NBT	NBR	SBT	NET
Lane Group Flow (vph)	1	85	4	13	323	89	3915
v/c Ratio	0.01	0.75	0.04	0.05	0.20	0.37	0.94
Control Delay	102.0	138.8	96.3	95.5	0.3	101.7	22.0
Queue Delay	0.0	0.0	0.0	0.0	0.0	0.0	13.0
Total Delay	102.0	138.8	96.3	95.5	0.3	101.7	35.0
Queue Length 50th (ft)	1	71	6	9	0	66	1473
Queue Length 95th (ft)	10	#112	19	22	0	96	1107
Internal Link Dist (ft)	257			1041		665	1300
Turn Bay Length (ft)					200		
Base Capacity (vph)	72	114	92	257	1583	243	4161
Starvation Cap Reductn	0	0	0	0	0	0	336
Spillback Cap Reductn	0	0	0	0	0	0	0
Storage Cap Reductn	0	0	0	0	0	0	0
Reduced v/c Ratio	0.01	0.75	0.04	0.05	0.20	0.37	1.02

Intersection Summary

95th percentile volume exceeds capacity, queue may be longer.
Queue shown is maximum after two cycles.

Movement	EBL	EBR	NBL	NBT	NBR	SBL	SBT	NEL2	NEL	NET	NER
Lane Configurations											
Volume (vph)	1	71	3	11	271	3	71	1	2	3280	6
Ideal Flow (vphpl)	1900	1900	1900	1900	1900	1900	1900	1900	1900	1900	1900
Total Lost time (s)	5.0	5.0	5.0	5.0	4.0		5.0			5.0	
Lane Util. Factor	1.00	0.88	1.00	0.95	1.00		0.95			0.91	
Frt	1.00	0.85	1.00	1.00	0.85		1.00			1.00	
Flt Protected	0.95	1.00	0.95	1.00	1.00		1.00			1.00	
Satd. Flow (prot)	1770	2787	1770	3539	1583		3531			5084	
Flt Permitted	0.95	1.00	0.68	1.00	1.00		0.95			1.00	
Satd. Flow (perm)	1770	2787	1261	3539	1583		3346			5084	
Peak-hour factor, PHF	0.84	0.84	0.84	0.84	0.84	0.84	0.84	0.84	0.84	0.84	0.84
Adj. Flow (vph)	1	85	4	13	323	4	85	1	2	3905	7
RTOR Reduction (vph)	0	0	0	0	0	0	0	0	0	0	0
Lane Group Flow (vph)	1	85	4	13	323	0	89	0	0	3915	0
Turn Type	NA	Perm	Perm	NA	Free	Perm	NA	Perm	Perm	NA	
Protected Phases	3			4			8			6	
Permitted Phases		3	4		Free	8		6	6		
Actuated Green, G (s)	8.9	8.9	16.0	16.0	219.9		16.0			180.0	
Effective Green, g (s)	8.9	8.9	16.0	16.0	219.9		16.0			180.0	
Actuated g/C Ratio	0.04	0.04	0.07	0.07	1.00		0.07			0.82	
Clearance Time (s)	5.0	5.0	5.0	5.0			5.0			5.0	
Vehicle Extension (s)	3.0	3.0	3.0	3.0			3.0			3.0	
Lane Grp Cap (vph)	72	113	92	257	1583		243			4162	
v/s Ratio Prot	0.00			0.00							
v/s Ratio Perm		c0.03	0.00		0.20		c0.03			0.77	
v/c Ratio	0.01	0.75	0.04	0.05	0.20		0.37			0.94	
Uniform Delay, d1	101.3	104.4	94.8	94.9	0.0		97.1			15.7	
Progression Factor	1.00	1.00	1.00	1.00	1.00		1.00			1.00	
Incremental Delay, d2	0.1	24.2	0.9	0.4	0.3		4.2			5.7	
Delay (s)	101.4	128.6	95.7	95.3	0.3		101.3			21.4	
Level of Service	F	F	F	F	A		F			C	
Approach Delay (s)	128.3			5.0			101.3			21.4	
Approach LOS	F			A			F			C	

Intersection Summary			
HCM Average Control Delay	23.8	HCM Level of Service	C
HCM Volume to Capacity ratio	0.89		
Actuated Cycle Length (s)	219.9	Sum of lost time (s)	15.0
Intersection Capacity Utilization	87.7%	ICU Level of Service	E
Analysis Period (min)	15		
c Critical Lane Group			

Movement	EBL	EBR	NBL	NBT	SBT	SBR
Lane Configurations						
Volume (veh/h)	40	33	34	302	55	43
Sign Control	Stop			Free	Free	
Grade	0%			0%	0%	
Peak Hour Factor	0.90	0.90	0.90	0.90	0.90	0.90
Hourly flow rate (vph)	44	37	38	336	61	48
Pedestrians						
Lane Width (ft)						
Walking Speed (ft/s)						
Percent Blockage						
Right turn flare (veh)						
Median type				None	None	
Median storage veh)						
Upstream signal (ft)					1121	
pX, platoon unblocked						
vC, conflicting volume	496	85	109			
vC1, stage 1 conf vol						
vC2, stage 2 conf vol						
vCu, unblocked vol	496	85	109			
tC, single (s)	6.4	6.2	4.1			
tC, 2 stage (s)						
tF (s)	3.5	3.3	2.2			
p0 queue free %	91	96	97			
cM capacity (veh/h)	519	974	1482			

Direction, Lane #	EB 1	NB 1	SB 1
Volume Total	81	373	109
Volume Left	44	38	0
Volume Right	37	0	48
cSH	658	1482	1700
Volume to Capacity	0.12	0.03	0.06
Queue Length 95th (ft)	10	2	0
Control Delay (s)	11.2	1.0	0.0
Lane LOS	B	A	
Approach Delay (s)	11.2	1.0	0.0
Approach LOS	B		

Intersection Summary			
Average Delay	2.3		
Intersection Capacity Utilization	35.3%	ICU Level of Service	A
Analysis Period (min)	15		

Movement	WBL	WBR	NBT	NBR	SBL	SBT
Lane Configurations						
Volume (veh/h)	63	47	290	35	13	54
Sign Control	Stop		Free			Free
Grade	0%		0%			0%
Peak Hour Factor	0.89	0.89	0.89	0.89	0.89	0.89
Hourly flow rate (vph)	71	53	326	39	15	61
Pedestrians						
Lane Width (ft)						
Walking Speed (ft/s)						
Percent Blockage						
Right turn flare (veh)						
Median type			None			None
Median storage veh)						
Upstream signal (ft)						
pX, platoon unblocked						
vC, conflicting volume	435	346			365	
vC1, stage 1 conf vol						
vC2, stage 2 conf vol						
vCu, unblocked vol	435	346			365	
tC, single (s)	6.4	6.2			4.1	
tC, 2 stage (s)						
tF (s)	3.5	3.3			2.2	
p0 queue free %	88	92			99	
cM capacity (veh/h)	571	697			1193	

Direction, Lane #	WB 1	NB 1	SB 1
Volume Total	124	365	75
Volume Left	71	0	15
Volume Right	53	39	0
cSH	619	1700	1193
Volume to Capacity	0.20	0.21	0.01
Queue Length 95th (ft)	18	0	1
Control Delay (s)	12.3	0.0	1.6
Lane LOS	B		A
Approach Delay (s)	12.3	0.0	1.6
Approach LOS	B		

Intersection Summary			
Average Delay	2.9		
Intersection Capacity Utilization	30.4%	ICU Level of Service	A
Analysis Period (min)	15		

Movement	EBL	EBR	NBL	NBT	SBT	SBR
Lane Configurations						
Volume (veh/h)	21	24	16	326	76	40
Sign Control	Stop			Free	Free	
Grade	0%			0%	0%	
Peak Hour Factor	0.95	0.95	0.95	0.95	0.95	0.95
Hourly flow rate (vph)	22	25	17	343	80	42
Pedestrians						
Lane Width (ft)						
Walking Speed (ft/s)						
Percent Blockage						
Right turn flare (veh)						
Median type				None	None	
Median storage veh)						
Upstream signal (ft)				1230		
pX, platoon unblocked						
vC, conflicting volume	478	101	122			
vC1, stage 1 conf vol						
vC2, stage 2 conf vol						
vCu, unblocked vol	478	101	122			
tC, single (s)	6.4	6.2	4.1			
tC, 2 stage (s)						
tF (s)	3.5	3.3	2.2			
p0 queue free %	96	97	99			
cM capacity (veh/h)	540	954	1465			

Direction, Lane #	EB 1	NB 1	SB 1
Volume Total	47	360	122
Volume Left	22	17	0
Volume Right	25	0	42
cSH	703	1465	1700
Volume to Capacity	0.07	0.01	0.07
Queue Length 95th (ft)	5	1	0
Control Delay (s)	10.5	0.5	0.0
Lane LOS	B	A	
Approach Delay (s)	10.5	0.5	0.0
Approach LOS	B		

Intersection Summary			
Average Delay	1.2		
Intersection Capacity Utilization	34.7%	ICU Level of Service	A
Analysis Period (min)	15		

Movement	EBL	EBT	EBR	WBL	WBT	WBR	NBL	NBT	NBR	SBL	SBT	SBR
Lane Configurations												
Volume (veh/h)	19	11	9	41	21	16	11	311	12	4	87	6
Sign Control		Stop			Stop			Free			Free	
Grade		0%			0%			0%			0%	
Peak Hour Factor	0.93	0.93	0.93	0.93	0.93	0.93	0.93	0.93	0.93	0.93	0.93	0.93
Hourly flow rate (vph)	20	12	10	44	23	17	12	334	13	4	94	6
Pedestrians												
Lane Width (ft)												
Walking Speed (ft/s)												
Percent Blockage												
Right turn flare (veh)												
Median type								None			None	
Median storage veh)												
Upstream signal (ft)								904				
pX, platoon unblocked	0.94	0.94		0.94	0.94	0.94				0.94		
vC, conflicting volume	498	476	97	485	473	341	100			347		
vC1, stage 1 conf vol												
vC2, stage 2 conf vol												
vCu, unblocked vol	431	408	97	417	404	263	100			270		
tC, single (s)	7.1	6.5	6.2	7.1	6.5	6.2	4.1			4.1		
tC, 2 stage (s)												
tF (s)	3.5	4.0	3.3	3.5	4.0	3.3	2.2			2.2		
p0 queue free %	96	98	99	91	95	98	99			100		
cM capacity (veh/h)	468	494	959	493	496	727	1493			1212		

Direction, Lane #	EB 1	WB 1	NB 1	SB 1
Volume Total	42	84	359	104
Volume Left	20	44	12	4
Volume Right	10	17	13	6
cSH	540	529	1493	1212
Volume to Capacity	0.08	0.16	0.01	0.00
Queue Length 95th (ft)	6	14	1	0
Control Delay (s)	12.2	13.1	0.3	0.4
Lane LOS	B	B	A	A
Approach Delay (s)	12.2	13.1	0.3	0.4
Approach LOS	B	B		

Intersection Summary			
Average Delay	3.0		
Intersection Capacity Utilization	33.5%	ICU Level of Service	A
Analysis Period (min)	15		

Movement	EBL	EBT	EBR	WBL	WBT	WBR	NBL	NBT	NBR	SBL	SBT	SBR
Lane Configurations												
Volume (veh/h)	11	12	2	0	4	1	2	321	6	0	129	5
Sign Control		Stop			Stop			Free			Free	
Grade		0%			0%			0%			0%	
Peak Hour Factor	0.91	0.91	0.91	0.91	0.91	0.91	0.91	0.91	0.91	0.91	0.91	0.91
Hourly flow rate (vph)	12	13	2	0	4	1	2	353	7	0	142	5
Pedestrians												
Lane Width (ft)												
Walking Speed (ft/s)												
Percent Blockage												
Right turn flare (veh)												
Median type								None			None	
Median storage veh)												
Upstream signal (ft)								601				
pX, platoon unblocked	0.89	0.89		0.89	0.89	0.89				0.89		
vC, conflicting volume	508	508	145	514	508	356	147			359		
vC1, stage 1 conf vol												
vC2, stage 2 conf vol												
vCu, unblocked vol	385	385	145	391	385	214	147			218		
tC, single (s)	7.1	6.5	6.2	7.1	6.5	6.2	4.1			4.1		
tC, 2 stage (s)												
tF (s)	3.5	4.0	3.3	3.5	4.0	3.3	2.2			2.2		
p0 queue free %	98	97	100	100	99	100	100			100		
cM capacity (veh/h)	505	487	903	493	488	735	1435			1203		

Direction, Lane #	EB 1	WB 1	NB 1	SB 1
Volume Total	27	5	362	147
Volume Left	12	0	2	0
Volume Right	2	1	7	5
cSH	514	523	1435	1203
Volume to Capacity	0.05	0.01	0.00	0.00
Queue Length 95th (ft)	4	1	0	0
Control Delay (s)	12.4	12.0	0.1	0.0
Lane LOS	B	B	A	
Approach Delay (s)	12.4	12.0	0.1	0.0
Approach LOS	B	B		

Intersection Summary			
Average Delay	0.8		
Intersection Capacity Utilization	33.5%	ICU Level of Service	A
Analysis Period (min)	15		

Movement	EBL	EBT	EBR	WBL	WBT	WBR	NBL	NBT	NBR	SBL	SBT	SBR
Lane Configurations												
Volume (veh/h)	17	9	31	0	1	1	16	302	3	1	106	28
Sign Control		Stop			Stop			Free			Free	
Grade		0%			0%			0%			0%	
Peak Hour Factor	0.94	0.94	0.94	0.94	0.94	0.94	0.94	0.94	0.94	0.94	0.94	0.94
Hourly flow rate (vph)	18	10	33	0	1	1	17	321	3	1	113	30
Pedestrians												
Lane Width (ft)												
Walking Speed (ft/s)												
Percent Blockage												
Right turn flare (veh)												
Median type								None			None	
Median storage veh)												
Upstream signal (ft)								300				
pX, platoon unblocked	0.85	0.85		0.85	0.85	0.85				0.85		
vC, conflicting volume	488	488	128	524	502	323	143			324		
vC1, stage 1 conf vol												
vC2, stage 2 conf vol												
vCu, unblocked vol	313	313	128	355	328	119	143			121		
tC, single (s)	7.1	6.5	6.2	7.1	6.5	6.2	4.1			4.1		
tC, 2 stage (s)												
tF (s)	3.5	4.0	3.3	3.5	4.0	3.3	2.2			2.2		
p0 queue free %	97	98	96	100	100	100	99			100		
cM capacity (veh/h)	538	507	922	481	497	795	1440			1250		

Direction, Lane #	EB 1	WB 1	NB 1	SB 1
Volume Total	61	2	341	144
Volume Left	18	0	17	1
Volume Right	33	1	3	30
cSH	687	611	1440	1250
Volume to Capacity	0.09	0.00	0.01	0.00
Queue Length 95th (ft)	7	0	1	0
Control Delay (s)	10.7	10.9	0.5	0.1
Lane LOS	B	B	A	A
Approach Delay (s)	10.7	10.9	0.5	0.1
Approach LOS	B	B		

Intersection Summary			
Average Delay	1.5		
Intersection Capacity Utilization	43.5%	ICU Level of Service	A
Analysis Period (min)	15		

Lane Group	EBL	EBT	EBR	WBL	WBT	NBL	NBT	SBL	SBT
Lane Group Flow (vph)	72	445	112	145	582	232	591	16	107
v/c Ratio	0.14	0.43	0.26	0.27	0.55	0.42	0.66	0.04	0.14
Control Delay	18.4	25.7	9.8	24.7	39.4	26.9	33.7	27.2	37.7
Queue Delay	0.0	0.0	0.0	0.0	0.0	0.0	0.0	0.0	0.0
Total Delay	18.4	25.7	9.8	24.7	39.4	26.9	33.7	27.2	37.7
Queue Length 50th (ft)	25	87	0	64	187	116	130	8	32
Queue Length 95th (ft)	70	179	54	147	341	217	254	27	70
Internal Link Dist (ft)		1441			531		229		156
Turn Bay Length (ft)	130			95		155		130	
Base Capacity (vph)	611	2028	850	553	2058	717	2009	546	2013
Starvation Cap Reductn	0	0	0	0	29	0	0	0	0
Spillback Cap Reductn	0	0	0	0	0	0	0	0	0
Storage Cap Reductn	0	0	0	0	0	0	0	0	0
Reduced v/c Ratio	0.12	0.22	0.13	0.26	0.29	0.32	0.29	0.03	0.05

Intersection Summary

Movement	EBL	EBT	EBR	WBL	WBT	WBR	NBL	NBT	NBR	SBL	SBT	SBR
Lane Configurations												
Volume (vph)	68	423	106	138	499	54	220	293	269	15	93	9
Ideal Flow (vphpl)	1900	1900	1900	1900	1900	1900	1900	1900	1900	1900	1900	1900
Total Lost time (s)	3.0	3.0	5.0	3.0	3.0		3.0	3.0		3.0	3.0	
Lane Util. Factor	1.00	0.95	1.00	1.00	0.95		1.00	0.95		1.00	0.95	
Frt	1.00	1.00	0.85	1.00	0.99		1.00	0.93		1.00	0.99	
Flt Protected	0.95	1.00	1.00	0.95	1.00		0.95	1.00		0.95	1.00	
Satd. Flow (prot)	1770	3539	1583	1770	3487		1770	3285		1770	3495	
Flt Permitted	0.32	1.00	1.00	0.49	1.00		0.68	1.00		0.43	1.00	
Satd. Flow (perm)	599	3539	1583	921	3487		1275	3285		799	3495	
Peak-hour factor, PHF	0.95	0.95	0.95	0.95	0.95	0.95	0.95	0.95	0.95	0.95	0.95	0.95
Adj. Flow (vph)	72	445	112	145	525	57	232	308	283	16	98	9
RTOR Reduction (vph)	0	0	88	0	4	0	0	85	0	0	4	0
Lane Group Flow (vph)	72	445	24	145	578	0	232	506	0	16	103	0
Turn Type	custom	NA	custom	custom	NA		custom	NA		custom	NA	
Protected Phases	1 2	2 4		1 3	3 4		5 6	6 8		5 7	7 8	
Permitted Phases	4		4	4			8			8		
Actuated Green, G (s)	49.8	33.4	25.5	47.2	33.8		42.1	27.7		38.4	27.0	
Effective Green, g (s)	49.8	33.4	25.5	47.2	33.8		42.1	27.7		38.4	27.0	
Actuated g/C Ratio	0.41	0.28	0.21	0.39	0.28		0.35	0.23		0.32	0.22	
Clearance Time (s)			5.0									
Vehicle Extension (s)			3.0									
Lane Grp Cap (vph)	482	978	334	512	976		525	753		383	781	
v/s Ratio Prot	0.03	c0.13		c0.05	c0.17		c0.07	c0.15		0.01	c0.03	
v/s Ratio Perm	0.03		0.01	0.06			0.08			0.01		
v/c Ratio	0.15	0.46	0.07	0.28	0.59		0.44	0.67		0.04	0.13	
Uniform Delay, d1	21.9	36.2	38.2	24.4	37.6		29.5	42.4		28.4	37.5	
Progression Factor	1.00	1.00	1.00	1.00	1.00		1.00	1.00		1.00	1.00	
Incremental Delay, d2	0.1	0.3	0.1	0.3	1.0		0.6	2.4		0.0	0.1	
Delay (s)	22.1	36.5	38.3	24.7	38.5		30.1	44.8		28.4	37.6	
Level of Service	C	D	D	C	D		C	D		C	D	
Approach Delay (s)		35.2			35.8			40.6			36.4	
Approach LOS		D			D			D			D	

Intersection Summary			
HCM Average Control Delay	37.4	HCM Level of Service	D
HCM Volume to Capacity ratio	0.51		
Actuated Cycle Length (s)	120.8	Sum of lost time (s)	18.0
Intersection Capacity Utilization	48.5%	ICU Level of Service	A
Analysis Period (min)	15		
c Critical Lane Group			

Lane Group	EBL	EBT	WBT	SBL
Lane Group Flow (vph)	334	597	792	116
v/c Ratio	0.95	0.28	0.37	0.23
Control Delay	51.6	8.2	8.9	32.3
Queue Delay	0.2	0.0	0.0	0.0
Total Delay	51.9	8.2	8.9	32.3
Queue Length 50th (ft)	163	78	110	27
Queue Length 95th (ft)	268	90	123	169
Internal Link Dist (ft)		531	201	216
Turn Bay Length (ft)	75			
Base Capacity (vph)	564	3423	3396	506
Starvation Cap Reductn	25	773	0	0
Spillback Cap Reductn	0	0	0	0
Storage Cap Reductn	0	0	0	0
Reduced v/c Ratio	0.62	0.23	0.23	0.23

Intersection Summary

Movement	EBL	EBT	WBT	WBR	SBL	SBR
Lane Configurations						
Volume (vph)	294	525	661	36	29	73
Ideal Flow (vphpl)	1900	1900	1900	1900	1900	1900
Total Lost time (s)	5.0	5.0	5.0		5.0	
Lane Util. Factor	1.00	0.95	0.95		1.00	
Frt	1.00	1.00	0.99		0.90	
Flt Protected	0.95	1.00	1.00		0.99	
Satd. Flow (prot)	1770	3539	3512		1659	
Flt Permitted	0.31	1.00	1.00		0.99	
Satd. Flow (perm)	583	3539	3512		1659	
Peak-hour factor, PHF	0.88	0.88	0.88	0.88	0.88	0.88
Adj. Flow (vph)	334	597	751	41	33	83
RTOR Reduction (vph)	0	0	4	0	33	0
Lane Group Flow (vph)	334	597	788	0	83	0
Turn Type	Perm	NA	NA		NA	
Protected Phases		4	8		6	
Permitted Phases	4					
Actuated Green, G (s)	66.2	66.2	66.2		31.1	
Effective Green, g (s)	66.2	66.2	66.2		31.1	
Actuated g/C Ratio	0.62	0.62	0.62		0.29	
Clearance Time (s)	5.0	5.0	5.0		5.0	
Vehicle Extension (s)	3.0	3.0	3.0		3.0	
Lane Grp Cap (vph)	360	2183	2167		481	
v/s Ratio Prot		0.17	0.22		c0.05	
v/s Ratio Perm	c0.57					
v/c Ratio	0.93	0.27	0.36		0.17	
Uniform Delay, d1	18.4	9.5	10.1		28.5	
Progression Factor	1.00	1.00	1.00		1.00	
Incremental Delay, d2	29.4	0.1	0.1		0.8	
Delay (s)	47.8	9.5	10.3		29.2	
Level of Service	D	A	B		C	
Approach Delay (s)		23.3	10.3		29.2	
Approach LOS		C	B		C	

Intersection Summary			
HCM Average Control Delay	18.0	HCM Level of Service	B
HCM Volume to Capacity ratio	0.69		
Actuated Cycle Length (s)	107.3	Sum of lost time (s)	10.0
Intersection Capacity Utilization	54.3%	ICU Level of Service	A
Analysis Period (min)	15		
c Critical Lane Group			

Queues
11: US-1 & SW 184th St.

2/18/2015

Lane Group	EBL	EBT	EBR	WBL	WBT	WBR	NBL	NBT	NBR	SBL	SBT	SBR
Lane Group Flow (vph)	477	595	5	199	614	7	64	2215	50	127	1557	175
v/c Ratio	0.87	0.64	0.01	0.70	0.87	0.02	0.36	0.85	0.05	0.77	0.55	0.08
Control Delay	77.4	59.8	24.5	51.4	76.5	23.3	17.7	35.0	3.0	59.5	23.0	0.8
Queue Delay	0.0	0.0	0.0	0.0	0.0	0.0	0.0	0.0	0.0	0.0	0.0	0.0
Total Delay	77.4	59.8	24.5	51.4	76.5	23.3	17.7	35.0	3.0	59.5	23.0	0.8
Queue Length 50th (ft)	236	198	0	145	218	0	24	679	3	71	365	0
Queue Length 95th (ft)	278	229	11	200	247	13	42	659	15	#149	371	8
Internal Link Dist (ft)		484			394			469			768	
Turn Bay Length (ft)	200		200	286		200	160		200	130		200
Base Capacity (vph)	582	932	411	321	724	385	180	2620	1097	171	2808	2147
Starvation Cap Reductn	0	0	0	0	0	0	0	0	0	0	0	0
Spillback Cap Reductn	0	0	0	0	0	0	0	0	0	0	0	0
Storage Cap Reductn	0	0	0	0	0	0	0	0	0	0	0	0
Reduced v/c Ratio	0.82	0.64	0.01	0.62	0.85	0.02	0.36	0.85	0.05	0.74	0.55	0.08

Intersection Summary

95th percentile volume exceeds capacity, queue may be longer.
Queue shown is maximum after two cycles.

Movement	EBL	EBT	EBR	WBL	WBT	WBR	NBL	NBT	NBR	SBL	SBT	SBR
Lane Configurations												
Volume (vph)	401	500	4	167	516	6	54	1861	42	107	1308	147
Ideal Flow (vphpl)	1900	1900	1900	1900	1900	1900	1900	1900	1900	1900	1900	1900
Total Lost time (s)	5.0	5.0	3.0	5.0	5.0	3.0	3.0	5.0	5.0	3.0	5.0	5.0
Lane Util. Factor	0.97	0.91	1.00	1.00	0.91	1.00	1.00	0.91	1.00	1.00	0.91	0.88
Frt	1.00	1.00	0.85	1.00	1.00	0.85	1.00	1.00	0.85	1.00	1.00	0.85
Flt Protected	0.95	1.00	1.00	0.95	1.00	1.00	0.95	1.00	1.00	0.95	1.00	1.00
Satd. Flow (prot)	3433	5085	1583	1770	5085	1583	1770	5085	1583	1770	5085	2787
Flt Permitted	0.95	1.00	1.00	0.31	1.00	1.00	0.11	1.00	1.00	0.05	1.00	1.00
Satd. Flow (perm)	3433	5085	1583	582	5085	1583	206	5085	1583	94	5085	2787
Peak-hour factor, PHF	0.84	0.84	0.84	0.84	0.84	0.84	0.84	0.84	0.84	0.84	0.84	0.84
Adj. Flow (vph)	477	595	5	199	614	7	64	2215	50	127	1557	175
RTOR Reduction (vph)	0	0	4	0	0	6	0	0	15	0	0	51
Lane Group Flow (vph)	477	595	1	199	614	1	64	2215	35	127	1557	124
Turn Type	Prot	NA	pm+ov	pm+pt	NA	pm+ov	pm+pt	NA	pm+ov	pm+pt	NA	pm+ov
Protected Phases	7	4	5	3	8	1	5	2	3	1	6	7
Permitted Phases			4	8		8	2		2	6		6
Actuated Green, G (s)	23.6	27.0	31.7	37.4	20.4	29.9	81.3	76.6	93.6	89.1	81.4	105.0
Effective Green, g (s)	23.6	27.0	31.7	37.4	20.4	29.9	81.3	76.6	93.6	89.1	81.4	105.0
Actuated g/C Ratio	0.16	0.18	0.21	0.25	0.14	0.20	0.55	0.52	0.63	0.60	0.55	0.71
Clearance Time (s)	5.0	5.0	3.0	5.0	5.0	3.0	3.0	5.0	5.0	3.0	5.0	5.0
Vehicle Extension (s)	3.0	3.0	3.0	3.0	3.0	3.0	3.0	3.0	3.0	3.0	3.0	3.0
Lane Grp Cap (vph)	547	927	339	283	700	320	163	2630	1054	164	2795	2070
v/s Ratio Prot	c0.14	0.12	0.00	0.08	c0.12	0.00	0.01	c0.44	0.00	c0.05	0.31	0.01
v/s Ratio Perm			0.00	0.10		0.00	0.20		0.02	0.42		0.03
v/c Ratio	0.87	0.64	0.00	0.70	0.88	0.00	0.39	0.84	0.03	0.77	0.56	0.06
Uniform Delay, d1	60.8	56.1	45.8	46.7	62.6	47.2	17.6	30.6	10.2	38.6	21.6	6.5
Progression Factor	1.00	1.00	1.00	1.00	1.00	1.00	1.00	1.00	1.00	1.00	1.00	1.00
Incremental Delay, d2	14.2	1.5	0.0	7.7	12.0	0.0	1.6	3.5	0.0	20.1	0.2	0.0
Delay (s)	75.0	57.6	45.8	54.4	74.6	47.2	19.1	34.1	10.3	58.7	21.9	6.6
Level of Service	E	E	D	D	E	D	B	C	B	E	C	A
Approach Delay (s)		65.3			69.5			33.1			23.0	
Approach LOS		E			E			C			C	

Intersection Summary			
HCM Average Control Delay	40.6	HCM Level of Service	D
HCM Volume to Capacity ratio	0.85		
Actuated Cycle Length (s)	148.1	Sum of lost time (s)	18.0
Intersection Capacity Utilization	79.1%	ICU Level of Service	D
Analysis Period (min)	15		
c Critical Lane Group			

Movement	EBL	EBT	EBR	WBL	WBT	WBR	NBL	NBT	NBR	SBL	SBT	SBR
Lane Configurations												
Volume (vph)	401	500	4	167	516	6	54	1861	42	107	1308	147
Movement Number	7	4	14	3	8	18	5	2	12	1	6	16
Initial Queue, veh	0	0	0	0	0	0	0	0	0	0	0	0
Ped-Bike Adj. Factor (A_pbT)	1.00		1.00	1.00		1.00	1.00		1.00	1.00		1.00
Parking, Bus Adj. Factors	1.00	1.00	1.00	1.00	1.00	1.00	1.00	1.00	1.00	1.00	1.00	1.00
Adj. Sat. Flow Rate, veh/h/ln	1863	1863	1863	1863	1863	1863	1863	1863	1863	1863	1863	1863
Lanes	2	3	1	1	3	1	1	3	1	1	3	2
Lane Assignment												
Capacity, veh/h	534	936	343	309	708	293	222	2714	1020	161	2781	1956
Proportion Arriving On Green	0.16	0.18	0.18	0.11	0.14	0.14	0.03	0.53	0.53	0.05	0.55	0.55
Movement Delay, s/veh	73.6	55.1	43.9	48.6	70.2	47.6	17.7	30.3	9.4	45.9	21.3	6.8
Movement LOS	E	E	D	D	E	D	B	C	A	D	C	A
Approach Volume, veh/h		1077			820			2330			1860	
Approach Delay, s/veh		63.3			64.7			29.5			21.6	
Approach LOS		E			E			C			C	

Timer:	1	2	3	4	5	6	7	8
Assigned Phase	1	2	3	4	5	6	7	8
Case No	1.1	3.0	1.1	3.0	1.1	3.0	2.0	3.0
Phase Duration (G+Y+Rc), s	9.48	81.00	20.72	31.21	7.61	82.88	27.10	24.84
Change Period (Y+Rc), s	3.00	5.00	5.00	5.00	3.00	5.00	5.00	5.00
Max. Allowable Headway (MAH), s	4.00	3.91	4.00	3.91	4.00	3.91	4.00	3.91
Maximum Green Setting (Gmax), s	10.00	76.00	20.00	26.00	6.00	80.00	25.00	21.00
Max. Queue Clearance Time (g_c+I1), s	6.42	53.28	15.49	17.41	4.32	30.49	21.38	18.84
Green Extension Time (g_e), s	0.10	19.76	0.24	3.51	0.02	37.43	0.72	1.00
Probability of Phase Call (p_c)	0.994	1.000	1.000	1.000	0.921	1.000	1.000	1.000
Probability of Max Out (p_x)	1.000	0.827	0.687	0.409	1.000	0.631	1.000	1.000

Left-Turn Movement Data				
Assigned Movement	1	3	5	7
Mvmt. Sat Flow, veh/h	1774.04	1774.04	1774.04	3441.64

Through Movement Data				
Assigned Movement	2	4	6	8
Mvmt. Sat Flow, veh/h	5085.29	5085.29	5085.29	5085.29

Right-Turn Movement Data				
Assigned Movement	12	14	16	18
Mvmt. Sat Flow, veh/h	1583.33	1583.33	2786.67	1583.33

Left Lane Group Data								
Assigned Movement	1	0	3	0	5	0	7	0
Lane Assignment	L (Pr/Pm)		L (Pr/Pm)		L (Pr/Pm)		L (Prot)	
Lanes in Group	1	0	1	0	1	0	2	0
Group Volume (v), veh/h	127.4	0.0	198.8	0.0	64.3	0.0	477.4	0.0
Group Sat. Flow (s), veh/h/ln	1774.0	0.0	1774.0	0.0	1774.0	0.0	1720.8	0.0
Queue Serve Time (g_s), s	4.4	0.0	13.5	0.0	2.3	0.0	19.4	0.0
Cycle Queue Clear Time (g_c), s	4.4	0.0	13.5	0.0	2.3	0.0	19.4	0.0

Perm LT Sat Flow Rate (s_l), veh/h/ln	173.4	0.0	819.0	0.0	329.8	0.0	0.0	0.0
Shared LT Sat Flow (s_sh), veh/h/ln	0.0	0.0	0.0	0.0	0.0	0.0	0.0	0.0
Perm LT Eff. Green (g_p), s	78.8	0.0	19.8	0.0	76.0	0.0	0.0	0.0
Perm LT Serve Time (g_u), s	24.7	0.0	10.8	0.0	49.4	0.0	0.0	0.0
Perm LT Que Serve Time (g_ps), s	24.7	0.0	2.9	0.0	6.4	0.0	0.0	0.0
Time to First Blk (g_f), s	0.0	0.0	0.0	0.0	0.0	0.0	0.0	0.0
Serve Time pre Blk (g_fs), s	0.0	0.0	0.0	0.0	0.0	0.0	0.0	0.0
Proportion LT Inside Lane (P_L)	1.000	0.000	1.000	0.000	1.000	0.000	1.000	0.000
Lane Group Capacity (c), veh/h	161.4	0.0	308.6	0.0	222.3	0.0	534.0	0.0
Volume-to-Capacity Ratio (X)	0.789	0.000	0.644	0.000	0.289	0.000	0.894	0.000
Available Capacity (c_a), veh/h	205.2	0.0	361.8	0.0	239.7	0.0	604.1	0.0
Upstream Filter Factor (I)	1.000	0.000	1.000	0.000	1.000	0.000	1.000	0.000
Uniform Delay (d1), s/veh	31.2	0.0	45.5	0.0	17.0	0.0	59.0	0.0
Incremental Delay (d2), s/veh	14.7	0.0	3.0	0.0	0.7	0.0	14.6	0.0
Initial Queue Delay (d3), s/veh	0.0	0.0	0.0	0.0	0.0	0.0	0.0	0.0
Control Delay (d), s/veh	45.9	0.0	48.6	0.0	17.7	0.0	73.6	0.0
First-Term Queue (Q1), veh/ln	2.8	0.0	6.0	0.0	1.0	0.0	8.5	0.0
Second-Term Queue (Q2), veh/ln	0.7	0.0	0.3	0.0	0.0	0.0	1.1	0.0
Third-Term Queue (Q3), veh/ln	0.0	0.0	0.0	0.0	0.0	0.0	0.0	0.0
Percentile bk-of-que factor (f_B%)	1.000	0.000	1.000	0.000	1.000	0.000	1.000	0.000
Percentile Back of Queue (Q%), veh/ln	3.4	0.0	6.3	0.0	1.0	0.0	9.5	0.0
Percentile Storage Ratio (RQ%)	0.67	0.00	0.56	0.00	0.16	0.00	1.21	0.00
Initial Queue (Qb), veh	0.0	0.0	0.0	0.0	0.0	0.0	0.0	0.0
Final (Residual) Queue (Qe), veh	0.0	0.0	0.0	0.0	0.0	0.0	0.0	0.0
Saturated Delay (ds), s/veh	0.0	0.0	0.0	0.0	0.0	0.0	0.0	0.0
Saturated Queue (Qs), veh	0.0	0.0	0.0	0.0	0.0	0.0	0.0	0.0
Saturated Capacity (cs), veh/h	0.0	0.0	0.0	0.0	0.0	0.0	0.0	0.0
Initial Queue Clear Time (tc), h	0.0	0.0	0.0	0.0	0.0	0.0	0.0	0.0

Middle Lane Group Data								
Assigned Movement	0	2	0	4	0	6	0	8
Lane Assignment		T		T		T		T
Lanes in Group	0	3	0	3	0	3	0	3
Group Volume (v), veh/h	0.0	2215.5	0.0	595.2	0.0	1557.1	0.0	614.3
Group Sat. Flow (s), veh/h/ln	0.0	1695.1	0.0	1695.1	0.0	1695.1	0.0	1695.1
Queue Serve Time (g_s), s	0.0	51.3	0.0	15.4	0.0	28.5	0.0	16.8
Cycle Queue Clear Time (g_c), s	0.0	51.3	0.0	15.4	0.0	28.5	0.0	16.8
Lane Group Capacity (c), veh/h	0.0	2713.7	0.0	936.0	0.0	2780.7	0.0	708.3
Volume-to-Capacity Ratio (X)	0.000	0.816	0.000	0.636	0.000	0.560	0.000	0.867
Available Capacity (c_a), veh/h	0.0	2713.7	0.0	936.0	0.0	2856.5	0.0	749.8
Upstream Filter Factor (I)	0.000	1.000	0.000	1.000	0.000	1.000	0.000	1.000
Uniform Delay (d1), s/veh	0.0	27.4	0.0	53.7	0.0	21.1	0.0	60.0
Incremental Delay (d2), s/veh	0.0	2.9	0.0	1.4	0.0	0.2	0.0	10.2
Initial Queue Delay (d3), s/veh	0.0	0.0	0.0	0.0	0.0	0.0	0.0	0.0
Control Delay (d), s/veh	0.0	30.3	0.0	55.1	0.0	21.3	0.0	70.2
First-Term Queue (Q1), veh/ln	0.0	20.4	0.0	6.6	0.0	11.3	0.0	7.3
Second-Term Queue (Q2), veh/ln	0.0	0.7	0.0	0.1	0.0	0.1	0.0	0.7
Third-Term Queue (Q3), veh/ln	0.0	0.0	0.0	0.0	0.0	0.0	0.0	0.0
Percentile bk-of-que factor (f_B%)	0.000	1.000	0.000	1.000	0.000	1.000	0.000	1.000
Percentile Back of Queue (Q%), veh/ln	0.0	21.1	0.0	6.7	0.0	11.3	0.0	7.9
Percentile Storage Ratio (RQ%)	0.00	1.24	0.00	0.38	0.00	0.41	0.00	0.58

Initial Queue (Qb), veh	0.0	0.0	0.0	0.0	0.0	0.0	0.0	0.0
Final (Residual) Queue (Qe), veh	0.0	0.0	0.0	0.0	0.0	0.0	0.0	0.0
Saturated Delay (ds), s/veh	0.0	0.0	0.0	0.0	0.0	0.0	0.0	0.0
Saturated Queue (Qs), veh	0.0	0.0	0.0	0.0	0.0	0.0	0.0	0.0
Saturated Capacity (cs), veh/h	0.0	0.0	0.0	0.0	0.0	0.0	0.0	0.0
Initial Queue Clear Time (tc), h	0.0	0.0	0.0	0.0	0.0	0.0	0.0	0.0

Right Lane Group Data								
Assigned Movement	0	12	0	14	0	16	0	18
Lane Assignment		R		R		R		R
Lanes in Group	0	1	0	1	0	2	0	1
Group Volume (v), veh/h	0.0	50.0	0.0	4.8	0.0	175.0	0.0	7.1
Group Sat. Flow (s), veh/h/ln	0.0	1583.3	0.0	1583.3	0.0	1393.3	0.0	1583.3
Queue Serve Time (g_s), s	0.0	1.7	0.0	0.3	0.0	2.8	0.0	0.5
Cycle Queue Clear Time (g_c), s	0.0	1.7	0.0	0.3	0.0	2.8	0.0	0.5
Prot RT Sat Flow Rate (s_R), veh/h/ln	0.0	1583.3	0.0	1583.3	0.0	1393.3	0.0	1583.3
Prot RT Eff. Green (g_R), s	0.0	15.7	0.0	4.6	0.0	22.1	0.0	6.5
Proportion RT Outside Lane (P_R)	0.000	1.000	0.000	1.000	0.000	1.000	0.000	1.000
Lane Group Capacity (c), veh/h	0.0	1019.7	0.0	342.6	0.0	1956.2	0.0	292.6
Volume-to-Capacity Ratio (X)	0.000	0.049	0.000	0.014	0.000	0.089	0.000	0.024
Available Capacity (c_a), veh/h	0.0	1019.7	0.0	342.6	0.0	1997.7	0.0	305.5
Upstream Filter Factor (I)	0.000	1.000	0.000	1.000	0.000	1.000	0.000	1.000
Uniform Delay (d1), s/veh	0.0	9.3	0.0	43.9	0.0	6.7	0.0	47.5
Incremental Delay (d2), s/veh	0.0	0.1	0.0	0.0	0.0	0.0	0.0	0.0
Initial Queue Delay (d3), s/veh	0.0	0.0	0.0	0.0	0.0	0.0	0.0	0.0
Control Delay (d), s/veh	0.0	9.4	0.0	43.9	0.0	6.8	0.0	47.6
First-Term Queue (Q1), veh/ln	0.0	0.6	0.0	0.1	0.0	0.8	0.0	0.2
Second-Term Queue (Q2), veh/ln	0.0	0.0	0.0	0.0	0.0	0.0	0.0	0.0
Third-Term Queue (Q3), veh/ln	0.0	0.0	0.0	0.0	0.0	0.0	0.0	0.0
Percentile bk-of-que factor (f_B%)	0.000	1.000	0.000	1.000	0.000	1.000	0.000	1.000
Percentile Back of Queue (Q%), veh/ln	0.0	0.6	0.0	0.1	0.0	0.8	0.0	0.2
Percentile Storage Ratio (RQ%)	0.00	0.08	0.00	0.02	0.00	0.11	0.00	0.03
Initial Queue (Qb), veh	0.0	0.0	0.0	0.0	0.0	0.0	0.0	0.0
Final (Residual) Queue (Qe), veh	0.0	0.0	0.0	0.0	0.0	0.0	0.0	0.0
Saturated Delay (ds), s/veh	0.0	0.0	0.0	0.0	0.0	0.0	0.0	0.0
Saturated Queue (Qs), veh	0.0	0.0	0.0	0.0	0.0	0.0	0.0	0.0
Saturated Capacity (cs), veh/h	0.0	0.0	0.0	0.0	0.0	0.0	0.0	0.0
Initial Queue Clear Time (tc), h	0.0	0.0	0.0	0.0	0.0	0.0	0.0	0.0

Intersection Summary	
HCM Average Control Delay	37.8
HCM Level of Service	D

Lane Group	EBT	WBT	NET
Lane Group Flow (vph)	19	15	2673
v/c Ratio	0.33	0.20	0.56
Control Delay	112.2	58.2	1.8
Queue Delay	0.0	0.0	0.0
Total Delay	112.2	58.2	1.8
Queue Length 50th (ft)	26	7	172
Queue Length 95th (ft)	61	37	228
Internal Link Dist (ft)	48	206	515
Turn Bay Length (ft)			
Base Capacity (vph)	139	176	4791
Starvation Cap Reductn	0	0	0
Spillback Cap Reductn	0	0	0
Storage Cap Reductn	0	0	0
Reduced v/c Ratio	0.14	0.09	0.56

Intersection Summary

Movement	EBL	EBT	EBR	WBL	WBT	WBR	NEL	NET	NER	SWL	SWT	SWR
Lane Configurations												
Volume (vph)	14	4	0	0	5	10	34	2512	20	0	0	0
Ideal Flow (vphpl)	1900	1900	1900	1900	1900	1900	1900	1900	1900	1900	1900	1900
Total Lost time (s)		5.0			5.0			5.0				
Lane Util. Factor		1.00			1.00			0.91				
Frt		1.00			0.91			1.00				
Flt Protected		0.96			1.00			1.00				
Satd. Flow (prot)		1792			1695			5076				
Flt Permitted		0.76			1.00			1.00				
Satd. Flow (perm)		1418			1695			5076				
Peak-hour factor, PHF	0.96	0.96	0.96	0.96	0.96	0.96	0.96	0.96	0.96	0.96	0.96	0.96
Adj. Flow (vph)	15	4	0	0	5	10	35	2617	21	0	0	0
RTOR Reduction (vph)	0	0	0	0	10	0	0	0	0	0	0	0
Lane Group Flow (vph)	0	19	0	0	5	0	0	2673	0	0	0	0
Turn Type	Perm	NA			NA		Split	NA				
Protected Phases		4			8		2	2				
Permitted Phases	4							2				
Actuated Green, G (s)		5.6			5.6			190.2				
Effective Green, g (s)		5.6			5.6			190.2				
Actuated g/C Ratio		0.03			0.03			0.92				
Clearance Time (s)		5.0			5.0			5.0				
Vehicle Extension (s)		3.0			3.0			3.0				
Lane Grp Cap (vph)		39			46			4691				
v/s Ratio Prot					0.00			c0.53				
v/s Ratio Perm		c0.01										
v/c Ratio		0.49			0.11			0.57				
Uniform Delay, d1		98.7			97.7			1.2				
Progression Factor		1.00			1.00			1.00				
Incremental Delay, d2		9.3			1.1			0.5				
Delay (s)		108.0			98.8			1.8				
Level of Service		F			F			A				
Approach Delay (s)		108.0			98.8			1.8			0.0	
Approach LOS		F			F			A			A	

Intersection Summary			
HCM Average Control Delay	3.0	HCM Level of Service	A
HCM Volume to Capacity ratio	0.57		
Actuated Cycle Length (s)	205.8	Sum of lost time (s)	10.0
Intersection Capacity Utilization	65.7%	ICU Level of Service	C
Analysis Period (min)	15		
c Critical Lane Group			

Movement	EBL	EBT	EBR	WBL	WBT	WBR	NEL	NET	NER	SWL	SWT	SWR
Lane Configurations												
Volume (vph)	14	4	0	0	5	10	34	2512	20	0	0	0
Movement Number	7	4	14	3	8	18	5	2	12	1	6	16
Initial Queue, veh	0	0	0	0	0	0	0	0	0	0	0	0
Ped-Bike Adj. Factor (A_pbT)	1.00		1.00	1.00		1.00	1.00		1.00	1.00		1.00
Parking, Bus Adj. Factors	1.00	1.00	1.00	1.00	1.00	1.00	1.00	1.00	1.00	1.00	1.00	1.00
Adj. Sat. Flow Rate, veh/h/ln	1863	1863	1900	1900	1863	1863	1863	1863	1863	1900	1900	1900
Lanes	0	1	0	0	1	0	0	3	0	0	0	0
Lane Assignment												
Capacity, veh/h	51	6	0	0	10	20	65	5097	42	0	0	0
Proportion Arriving On Green	0.02	0.02	0.00	0.00	0.02	0.02	0.93	0.93	0.93	0.00	0.00	0.00
Movement Delay, s/veh	102.6	0.0	0.0	0.0	0.0	112.8	2.2	1.9	1.9	0.0	0.0	0.0
Movement LOS	F					F	A	A	A			
Approach Volume, veh/h		19			16			2673			0	
Approach Delay, s/veh		102.6			112.8			2.0			0.0	
Approach LOS		F			F			A				

Timer:	1	2	3	4	5	6	7	8
Assigned Phase		2		4				8
Case No		12.0		8.0				8.0
Phase Duration (G+Y+Rc), s		195.00		8.63				8.63
Change Period (Y+Rc), s		5.00		5.00				5.00
Max. Allowable Headway (MAH), s		3.91		4.02				4.02
Maximum Green Setting (Gmax), s		190.00		20.00				20.00
Max. Queue Clearance Time (g_c+I1), s		16.18		4.19				3.89
Green Extension Time (g_e), s		23.02		0.05				0.05
Probability of Phase Call (p_c)		1.000		0.857				0.857
Probability of Max Out (p_x)		0.008		0.000				0.000

Left-Turn Movement Data		
Assigned Movement	5	7
Mvmt. Sat Flow, veh/h	69.47	1087.60

Through Movement Data		
Assigned Movement	2	4	8
Mvmt. Sat Flow, veh/h	5462.55	310.75	555.56

Right-Turn Movement Data			
Assigned Movement	12	14	18
Mvmt. Sat Flow, veh/h	44.83	0.00	1111.10

Left Lane Group Data								
Assigned Movement	0	5	0	7	0	0	0	0
Lane Assignment		L+T		L+T				
Lanes in Group	0	1	0	1	0	0	0	0
Group Volume (v), veh/h	0.0	947.9	0.0	18.8	0.0	0.0	0.0	0.0
Group Sat. Flow (s), veh/h/ln	0.0	1859.3	0.0	1398.4	0.0	0.0	0.0	0.0
Queue Serve Time (g_s), s	0.0	14.2	0.0	0.3	0.0	0.0	0.0	0.0
Cycle Queue Clear Time (g_c), s	0.0	14.2	0.0	2.2	0.0	0.0	0.0	0.0

Perm LT Sat Flow Rate (s_l), veh/h/ln	0.0	0.0	0.0	792.2	0.0	0.0	0.0	0.0
Shared LT Sat Flow (s_sh), veh/h/ln	0.0	0.0	0.0	1862.7	0.0	0.0	0.0	0.0
Perm LT Eff. Green (g_p), s	0.0	0.0	0.0	3.6	0.0	0.0	0.0	0.0
Perm LT Serve Time (g_u), s	0.0	0.0	0.0	1.7	0.0	0.0	0.0	0.0
Perm LT Que Serve Time (g_ps), s	0.0	0.0	0.0	0.3	0.0	0.0	0.0	0.0
Time to First Blk (g_f), s	0.0	0.0	0.0	0.0	0.0	0.0	0.0	3.6
Serve Time pre Blk (g_fs), s	0.0	0.0	0.0	0.0	0.0	0.0	0.0	0.0
Proportion LT Inside Lane (P_L)	0.000	0.037	0.000	0.778	0.000	0.000	0.000	0.000
Lane Group Capacity (c), veh/h	0.0	1734.8	0.0	56.4	0.0	0.0	0.0	0.0
Volume-to-Capacity Ratio (X)	0.000	0.546	0.000	0.333	0.000	0.000	0.000	0.000
Available Capacity (c_a), veh/h	0.0	1734.8	0.0	128.1	0.0	0.0	0.0	0.0
Upstream Filter Factor (I)	0.000	1.000	0.000	1.000	0.000	0.000	0.000	0.000
Uniform Delay (d1), s/veh	0.0	0.9	0.0	99.2	0.0	0.0	0.0	0.0
Incremental Delay (d2), s/veh	0.0	1.2	0.0	3.4	0.0	0.0	0.0	0.0
Initial Queue Delay (d3), s/veh	0.0	0.0	0.0	0.0	0.0	0.0	0.0	0.0
Control Delay (d), s/veh	0.0	2.2	0.0	102.6	0.0	0.0	0.0	0.0
First-Term Queue (Q1), veh/ln	0.0	1.7	0.0	1.0	0.0	0.0	0.0	0.0
Second-Term Queue (Q2), veh/ln	0.0	0.6	0.0	0.1	0.0	0.0	0.0	0.0
Third-Term Queue (Q3), veh/ln	0.0	0.0	0.0	0.0	0.0	0.0	0.0	0.0
Percentile bk-of-que factor (f_B%)	0.000	1.000	0.000	1.000	0.000	0.000	0.000	0.000
Percentile Back of Queue (Q%), veh/ln	0.0	2.3	0.0	1.1	0.0	0.0	0.0	0.0
Percentile Storage Ratio (RQ%)	0.00	0.11	0.00	0.25	0.00	0.00	0.00	0.00
Initial Queue (Qb), veh	0.0	0.0	0.0	0.0	0.0	0.0	0.0	0.0
Final (Residual) Queue (Qe), veh	0.0	0.0	0.0	0.0	0.0	0.0	0.0	0.0
Saturated Delay (ds), s/veh	0.0	0.0	0.0	0.0	0.0	0.0	0.0	0.0
Saturated Queue (Qs), veh	0.0	0.0	0.0	0.0	0.0	0.0	0.0	0.0
Saturated Capacity (cs), veh/h	0.0	0.0	0.0	0.0	0.0	0.0	0.0	0.0
Initial Queue Clear Time (tc), h	0.0	0.0	0.0	0.0	0.0	0.0	0.0	0.0
Middle Lane Group Data								
Assigned Movement	0	2	0	4	0	0	0	8
Lane Assignment		T						
Lanes in Group	0	1	0	0	0	0	0	0
Group Volume (v), veh/h	0.0	863.1	0.0	0.0	0.0	0.0	0.0	0.0
Group Sat. Flow (s), veh/h/ln	0.0	1862.7	0.0	0.0	0.0	0.0	0.0	0.0
Queue Serve Time (g_s), s	0.0	11.8	0.0	0.0	0.0	0.0	0.0	0.0
Cycle Queue Clear Time (g_c), s	0.0	11.8	0.0	0.0	0.0	0.0	0.0	0.0
Lane Group Capacity (c), veh/h	0.0	1738.1	0.0	0.0	0.0	0.0	0.0	0.0
Volume-to-Capacity Ratio (X)	0.000	0.497	0.000	0.000	0.000	0.000	0.000	0.000
Available Capacity (c_a), veh/h	0.0	1738.1	0.0	0.0	0.0	0.0	0.0	0.0
Upstream Filter Factor (I)	0.000	1.000	0.000	0.000	0.000	0.000	0.000	0.000
Uniform Delay (d1), s/veh	0.0	0.8	0.0	0.0	0.0	0.0	0.0	0.0
Incremental Delay (d2), s/veh	0.0	1.0	0.0	0.0	0.0	0.0	0.0	0.0
Initial Queue Delay (d3), s/veh	0.0	0.0	0.0	0.0	0.0	0.0	0.0	0.0
Control Delay (d), s/veh	0.0	1.9	0.0	0.0	0.0	0.0	0.0	0.0
First-Term Queue (Q1), veh/ln	0.0	1.5	0.0	0.0	0.0	0.0	0.0	0.0
Second-Term Queue (Q2), veh/ln	0.0	0.5	0.0	0.0	0.0	0.0	0.0	0.0
Third-Term Queue (Q3), veh/ln	0.0	0.0	0.0	0.0	0.0	0.0	0.0	0.0
Percentile bk-of-que factor (f_B%)	0.000	1.000	0.000	1.000	0.000	0.000	0.000	1.000
Percentile Back of Queue (Q%), veh/ln	0.0	1.9	0.0	0.0	0.0	0.0	0.0	0.0
Percentile Storage Ratio (RQ%)	0.00	0.09	0.00	0.00	0.00	0.00	0.00	0.00

Initial Queue (Qb), veh	0.0	0.0	0.0	0.0	0.0	0.0	0.0	0.0
Final (Residual) Queue (Qe), veh	0.0	0.0	0.0	0.0	0.0	0.0	0.0	0.0
Saturated Delay (ds), s/veh	0.0	0.0	0.0	0.0	0.0	0.0	0.0	0.0
Saturated Queue (Qs), veh	0.0	0.0	0.0	0.0	0.0	0.0	0.0	0.0
Saturated Capacity (cs), veh/h	0.0	0.0	0.0	0.0	0.0	0.0	0.0	0.0
Initial Queue Clear Time (tc), h	0.0	0.0	0.0	0.0	0.0	0.0	0.0	0.0
Right Lane Group Data								
Assigned Movement	0	12	0	14	0	0	0	18
Lane Assignment		T+R						T+R
Lanes in Group	0	1	0	0	0	0	0	1
Group Volume (v), veh/h	0.0	861.9	0.0	0.0	0.0	0.0	0.0	15.6
Group Sat. Flow (s), veh/h/ln	0.0	1854.8	0.0	0.0	0.0	0.0	0.0	1666.7
Queue Serve Time (g_s), s	0.0	11.8	0.0	0.0	0.0	0.0	0.0	1.9
Cycle Queue Clear Time (g_c), s	0.0	11.8	0.0	0.0	0.0	0.0	0.0	1.9
Prot RT Sat Flow Rate (s_R), veh/h/ln	0.0	0.0	0.0	0.0	0.0	0.0	0.0	0.0
Prot RT Eff. Green (g_R), s	0.0	0.0	0.0	0.0	0.0	0.0	0.0	0.0
Proportion RT Outside Lane (P_R)	0.000	0.024	0.000	0.000	0.000	0.000	0.000	0.667
Lane Group Capacity (c), veh/h	0.0	1730.7	0.0	0.0	0.0	0.0	0.0	29.7
Volume-to-Capacity Ratio (X)	0.000	0.498	0.000	0.000	0.000	0.000	0.000	0.526
Available Capacity (c_a), veh/h	0.0	1730.7	0.0	0.0	0.0	0.0	0.0	163.7
Upstream Filter Factor (I)	0.000	1.000	0.000	0.000	0.000	0.000	0.000	1.000
Uniform Delay (d1), s/veh	0.0	0.9	0.0	0.0	0.0	0.0	0.0	99.1
Incremental Delay (d2), s/veh	0.0	1.0	0.0	0.0	0.0	0.0	0.0	13.7
Initial Queue Delay (d3), s/veh	0.0	0.0	0.0	0.0	0.0	0.0	0.0	0.0
Control Delay (d), s/veh	0.0	1.9	0.0	0.0	0.0	0.0	0.0	112.8
First-Term Queue (Q1), veh/ln	0.0	1.5	0.0	0.0	0.0	0.0	0.0	0.8
Second-Term Queue (Q2), veh/ln	0.0	0.5	0.0	0.0	0.0	0.0	0.0	0.1
Third-Term Queue (Q3), veh/ln	0.0	0.0	0.0	0.0	0.0	0.0	0.0	0.0
Percentile bk-of-que factor (f_B%)	0.000	1.000	0.000	1.000	0.000	0.000	0.000	1.000
Percentile Back of Queue (Q%), veh/ln	0.0	1.9	0.0	0.0	0.0	0.0	0.0	0.9
Percentile Storage Ratio (RQ%)	0.00	0.09	0.00	0.00	0.00	0.00	0.00	0.11
Initial Queue (Qb), veh	0.0	0.0	0.0	0.0	0.0	0.0	0.0	0.0
Final (Residual) Queue (Qe), veh	0.0	0.0	0.0	0.0	0.0	0.0	0.0	0.0
Saturated Delay (ds), s/veh	0.0	0.0	0.0	0.0	0.0	0.0	0.0	0.0
Saturated Queue (Qs), veh	0.0	0.0	0.0	0.0	0.0	0.0	0.0	0.0
Saturated Capacity (cs), veh/h	0.0	0.0	0.0	0.0	0.0	0.0	0.0	0.0
Initial Queue Clear Time (tc), h	0.0	0.0	0.0	0.0	0.0	0.0	0.0	0.0
Intersection Summary								
HCM Average Control Delay		3.3						
HCM Level of Service		A						

Lane Group	EBT	WBT	NET
Lane Group Flow (vph)	14	62	2753
v/c Ratio	0.10	0.42	0.63
Control Delay	48.8	52.2	4.0
Queue Delay	0.0	0.0	0.6
Total Delay	48.8	52.2	4.6
Queue Length 50th (ft)	10	40	197
Queue Length 95th (ft)	29	78	283
Internal Link Dist (ft)	164	208	477
Turn Bay Length (ft)			
Base Capacity (vph)	251	264	4381
Starvation Cap Reductn	0	0	1051
Spillback Cap Reductn	0	0	0
Storage Cap Reductn	0	0	0
Reduced v/c Ratio	0.06	0.23	0.83

Intersection Summary

Movement	EBL	EBT	EBR	WBL	WBT	WBR	NEL	NET	NER	SWL	SWT	SWR
Lane Configurations												
Volume (vph)	2	11	0	0	46	12	5	2515	41	0	0	0
Ideal Flow (vphpl)	1900	1900	1900	1900	1900	1900	1900	1900	1900	1900	1900	1900
Total Lost time (s)		5.0			5.0			5.0				
Lane Util. Factor		1.00			1.00			0.91				
Frt		1.00			0.97			1.00				
Flt Protected		0.99			1.00			1.00				
Satd. Flow (prot)		1850			1810			5073				
Flt Permitted		0.95			1.00			1.00				
Satd. Flow (perm)		1769			1810			5073				
Peak-hour factor, PHF	0.93	0.93	0.93	0.93	0.93	0.93	0.93	0.93	0.93	0.93	0.93	0.93
Adj. Flow (vph)	2	12	0	0	49	13	5	2704	44	0	0	0
RTOR Reduction (vph)	0	0	0	0	7	0	0	1	0	0	0	0
Lane Group Flow (vph)	0	14	0	0	55	0	0	2752	0	0	0	0
Turn Type	Perm	NA			NA		Perm	NA				
Protected Phases		4			8			2				
Permitted Phases	4						2					
Actuated Green, G (s)		7.6			7.6			96.4				
Effective Green, g (s)		7.6			7.6			96.4				
Actuated g/C Ratio		0.07			0.07			0.85				
Clearance Time (s)		5.0			5.0			5.0				
Vehicle Extension (s)		3.0			3.0			3.0				
Lane Grp Cap (vph)		118			121			4290				
v/s Ratio Prot					c0.03							
v/s Ratio Perm		0.01						0.54				
v/c Ratio		0.12			0.45			0.64				
Uniform Delay, d1		50.0			51.2			3.0				
Progression Factor		1.00			1.00			1.00				
Incremental Delay, d2		0.5			2.7			0.7				
Delay (s)		50.5			53.8			3.7				
Level of Service		D			D			A				
Approach Delay (s)		50.5			53.8			3.7			0.0	
Approach LOS		D			D			A			A	

Intersection Summary			
HCM Average Control Delay	5.0	HCM Level of Service	A
HCM Volume to Capacity ratio	0.63		
Actuated Cycle Length (s)	114.0	Sum of lost time (s)	10.0
Intersection Capacity Utilization	61.3%	ICU Level of Service	B
Analysis Period (min)	15		
c Critical Lane Group			

Movement	EBL	EBT	EBR	WBL	WBT	WBR	NEL	NET	NER	SWL	SWT	SWR
Lane Configurations												
Volume (vph)	2	11	0	0	46	12	5	2515	41	0	0	0
Movement Number	7	4	14	3	8	18	5	2	12	1	6	16
Initial Queue, veh	0	0	0	0	0	0	0	0	0	0	0	0
Ped-Bike Adj. Factor (A_pbT)	1.00		1.00	1.00		1.00	1.00		1.00	1.00		1.00
Parking, Bus Adj. Factors	1.00	1.00	1.00	1.00	1.00	1.00	1.00	1.00	1.00	1.00	1.00	1.00
Adj. Sat. Flow Rate, veh/h/ln	1863	1863	1900	1900	1863	1863	1863	1863	1863	1900	1900	1900
Lanes	0	1	0	0	1	0	0	3	0	0	0	0
Lane Assignment												
Capacity, veh/h	49	79	0	0	69	18	37	4033	65	0	0	0
Proportion Arriving On Green	0.05	0.05	0.00	0.00	0.05	0.05	0.85	0.85	0.85	0.00	0.00	0.00
Movement Delay, s/veh	45.4	0.0	0.0	0.0	0.0	56.5	11.1	5.1	5.2	0.0	0.0	0.0
Movement LOS	D					E	B	A	A			
Approach Volume, veh/h		14			62			2754			0	
Approach Delay, s/veh		45.4			56.5			6.9			0.0	
Approach LOS		D			E			A				

Timer:	1	2	3	4	5	6	7	8
Assigned Phase		2		4				8
Case No		8.0		8.0				8.0
Phase Duration (G+Y+Rc), s		89.00		9.81				9.81
Change Period (Y+Rc), s		5.00		5.00				5.00
Max. Allowable Headway (MAH), s		3.91		3.97				3.97
Maximum Green Setting (Gmax), s		84.00		16.00				16.00
Max. Queue Clearance Time (g_c+I1), s		86.00		2.71				5.38
Green Extension Time (g_e), s		0.00		0.13				0.11
Probability of Phase Call (p_c)		1.000		0.877				0.877
Probability of Max Out (p_x)		1.000		0.000				0.001

Left-Turn Movement Data				
Assigned Movement		5		7
Mvmt. Sat Flow, veh/h		9.43		270.82

Through Movement Data				
Assigned Movement		2		4				8
Mvmt. Sat Flow, veh/h		4735.35		1489.53				1425.31

Right-Turn Movement Data				
Assigned Movement		12		14				18
Mvmt. Sat Flow, veh/h		76.88		0.00				371.82

Left Lane Group Data								
Assigned Movement	0	5	0	7	0	0	0	0
Lane Assignment		L+T		L+T				
Lanes in Group	0	1	0	1	0	0	0	0
Group Volume (v), veh/h	0.0	823.5	0.0	14.0	0.0	0.0	0.0	0.0
Group Sat. Flow (s), veh/h/ln	0.0	1445.0	0.0	1760.3	0.0	0.0	0.0	0.0
Queue Serve Time (g_s), s	0.0	0.0	0.0	0.0	0.0	0.0	0.0	0.0
Cycle Queue Clear Time (g_c), s	0.0	84.0	0.0	0.7	0.0	0.0	0.0	0.0

Perm LT Sat Flow Rate (s_l), veh/h/ln	0.0	800.0	0.0	769.2	0.0	0.0	0.0	0.0
Shared LT Sat Flow (s_sh), veh/h/ln	0.0	0.0	0.0	1862.7	0.0	0.0	0.0	0.0
Perm LT Eff. Green (g_p), s	0.0	84.0	0.0	4.8	0.0	0.0	0.0	0.0
Perm LT Serve Time (g_u), s	0.0	0.0	0.0	1.4	0.0	0.0	0.0	0.0
Perm LT Que Serve Time (g_ps), s	0.0	0.0	0.0	0.0	0.0	0.0	0.0	0.0
Time to First Blk (g_f), s	0.0	65.2	0.0	2.2	0.0	0.0	0.0	4.8
Serve Time pre Blk (g_fs), s	0.0	23.2	0.0	0.7	0.0	0.0	0.0	0.0
Proportion LT Inside Lane (P_L)	0.000	0.007	0.000	0.154	0.000	0.000	0.000	0.000
Lane Group Capacity (c), veh/h	0.0	1265.1	0.0	127.8	0.0	0.0	0.0	0.0
Volume-to-Capacity Ratio (X)	0.000	0.651	0.000	0.109	0.000	0.000	0.000	0.000
Available Capacity (c_a), veh/h	0.0	1265.1	0.0	299.8	0.0	0.0	0.0	0.0
Upstream Filter Factor (I)	0.000	1.000	0.000	1.000	0.000	0.000	0.000	0.000
Uniform Delay (d1), s/veh	0.0	8.5	0.0	45.0	0.0	0.0	0.0	0.0
Incremental Delay (d2), s/veh	0.0	2.6	0.0	0.4	0.0	0.0	0.0	0.0
Initial Queue Delay (d3), s/veh	0.0	0.0	0.0	0.0	0.0	0.0	0.0	0.0
Control Delay (d), s/veh	0.0	11.1	0.0	45.4	0.0	0.0	0.0	0.0
First-Term Queue (Q1), veh/ln	0.0	7.7	0.0	0.3	0.0	0.0	0.0	0.0
Second-Term Queue (Q2), veh/ln	0.0	0.9	0.0	0.0	0.0	0.0	0.0	0.0
Third-Term Queue (Q3), veh/ln	0.0	0.0	0.0	0.0	0.0	0.0	0.0	0.0
Percentile bk-of-que factor (f_B%)	0.000	1.000	0.000	1.000	0.000	0.000	0.000	0.000
Percentile Back of Queue (Q%), veh/ln	0.0	8.7	0.0	0.3	0.0	0.0	0.0	0.0
Percentile Storage Ratio (RQ%)	0.00	0.46	0.00	0.04	0.00	0.00	0.00	0.00
Initial Queue (Qb), veh	0.0	0.0	0.0	0.0	0.0	0.0	0.0	0.0
Final (Residual) Queue (Qe), veh	0.0	0.0	0.0	0.0	0.0	0.0	0.0	0.0
Saturated Delay (ds), s/veh	0.0	0.0	0.0	0.0	0.0	0.0	0.0	0.0
Saturated Queue (Qs), veh	0.0	0.0	0.0	0.0	0.0	0.0	0.0	0.0
Saturated Capacity (cs), veh/h	0.0	0.0	0.0	0.0	0.0	0.0	0.0	0.0
Initial Queue Clear Time (tc), h	0.0	0.0	0.0	0.0	0.0	0.0	0.0	0.0
Middle Lane Group Data								
Assigned Movement	0	2	0	4	0	0	0	8
Lane Assignment		T						
Lanes in Group	0	1	0	0	0	0	0	0
Group Volume (v), veh/h	0.0	966.0	0.0	0.0	0.0	0.0	0.0	0.0
Group Sat. Flow (s), veh/h/ln	0.0	1695.1	0.0	0.0	0.0	0.0	0.0	0.0
Queue Serve Time (g_s), s	0.0	19.6	0.0	0.0	0.0	0.0	0.0	0.0
Cycle Queue Clear Time (g_c), s	0.0	19.6	0.0	0.0	0.0	0.0	0.0	0.0
Lane Group Capacity (c), veh/h	0.0	1441.0	0.0	0.0	0.0	0.0	0.0	0.0
Volume-to-Capacity Ratio (X)	0.000	0.670	0.000	0.000	0.000	0.000	0.000	0.000
Available Capacity (c_a), veh/h	0.0	1441.0	0.0	0.0	0.0	0.0	0.0	0.0
Upstream Filter Factor (I)	0.000	1.000	0.000	0.000	0.000	0.000	0.000	0.000
Uniform Delay (d1), s/veh	0.0	2.6	0.0	0.0	0.0	0.0	0.0	0.0
Incremental Delay (d2), s/veh	0.0	2.5	0.0	0.0	0.0	0.0	0.0	0.0
Initial Queue Delay (d3), s/veh	0.0	0.0	0.0	0.0	0.0	0.0	0.0	0.0
Control Delay (d), s/veh	0.0	5.1	0.0	0.0	0.0	0.0	0.0	0.0
First-Term Queue (Q1), veh/ln	0.0	2.8	0.0	0.0	0.0	0.0	0.0	0.0
Second-Term Queue (Q2), veh/ln	0.0	1.0	0.0	0.0	0.0	0.0	0.0	0.0
Third-Term Queue (Q3), veh/ln	0.0	0.0	0.0	0.0	0.0	0.0	0.0	0.0
Percentile bk-of-que factor (f_B%)	0.000	1.000	0.000	1.000	0.000	0.000	0.000	1.000
Percentile Back of Queue (Q%), veh/ln	0.0	3.8	0.0	0.0	0.0	0.0	0.0	0.0
Percentile Storage Ratio (RQ%)	0.00	0.20	0.00	0.00	0.00	0.00	0.00	0.00

Initial Queue (Qb), veh	0.0	0.0	0.0	0.0	0.0	0.0	0.0	0.0
Final (Residual) Queue (Qe), veh	0.0	0.0	0.0	0.0	0.0	0.0	0.0	0.0
Saturated Delay (ds), s/veh	0.0	0.0	0.0	0.0	0.0	0.0	0.0	0.0
Saturated Queue (Qs), veh	0.0	0.0	0.0	0.0	0.0	0.0	0.0	0.0
Saturated Capacity (cs), veh/h	0.0	0.0	0.0	0.0	0.0	0.0	0.0	0.0
Initial Queue Clear Time (tc), h	0.0	0.0	0.0	0.0	0.0	0.0	0.0	0.0

Right Lane Group Data								
Assigned Movement	0	12	0	14	0	0	0	18
Lane Assignment		T+R						T+R
Lanes in Group	0	1	0	0	0	0	0	1
Group Volume (v), veh/h	0.0	964.3	0.0	0.0	0.0	0.0	0.0	62.4
Group Sat. Flow (s), veh/h/ln	0.0	1681.5	0.0	0.0	0.0	0.0	0.0	1797.1
Queue Serve Time (g_s), s	0.0	19.9	0.0	0.0	0.0	0.0	0.0	3.4
Cycle Queue Clear Time (g_c), s	0.0	19.9	0.0	0.0	0.0	0.0	0.0	3.4
Prot RT Sat Flow Rate (s_R), veh/h/ln	0.0	0.0	0.0	0.0	0.0	0.0	0.0	0.0
Prot RT Eff. Green (g_R), s	0.0	0.0	0.0	0.0	0.0	0.0	0.0	0.0
Proportion RT Outside Lane (P_R)	0.000	0.046	0.000	0.000	0.000	0.000	0.000	0.207
Lane Group Capacity (c), veh/h	0.0	1429.4	0.0	0.0	0.0	0.0	0.0	87.6
Volume-to-Capacity Ratio (X)	0.000	0.675	0.000	0.000	0.000	0.000	0.000	0.712
Available Capacity (c_a), veh/h	0.0	1429.4	0.0	0.0	0.0	0.0	0.0	291.0
Upstream Filter Factor (I)	0.000	1.000	0.000	0.000	0.000	0.000	0.000	1.000
Uniform Delay (d1), s/veh	0.0	2.6	0.0	0.0	0.0	0.0	0.0	46.3
Incremental Delay (d2), s/veh	0.0	2.6	0.0	0.0	0.0	0.0	0.0	10.2
Initial Queue Delay (d3), s/veh	0.0	0.0	0.0	0.0	0.0	0.0	0.0	0.0
Control Delay (d), s/veh	0.0	5.2	0.0	0.0	0.0	0.0	0.0	56.5
First-Term Queue (Q1), veh/ln	0.0	2.8	0.0	0.0	0.0	0.0	0.0	1.5
Second-Term Queue (Q2), veh/ln	0.0	1.0	0.0	0.0	0.0	0.0	0.0	0.2
Third-Term Queue (Q3), veh/ln	0.0	0.0	0.0	0.0	0.0	0.0	0.0	0.0
Percentile bk-of-que factor (f_B%)	0.000	1.000	0.000	1.000	0.000	0.000	0.000	1.000
Percentile Back of Queue (Q%), veh/ln	0.0	3.8	0.0	0.0	0.0	0.0	0.0	1.7
Percentile Storage Ratio (RQ%)	0.00	0.20	0.00	0.00	0.00	0.00	0.00	0.20
Initial Queue (Qb), veh	0.0	0.0	0.0	0.0	0.0	0.0	0.0	0.0
Final (Residual) Queue (Qe), veh	0.0	0.0	0.0	0.0	0.0	0.0	0.0	0.0
Saturated Delay (ds), s/veh	0.0	0.0	0.0	0.0	0.0	0.0	0.0	0.0
Saturated Queue (Qs), veh	0.0	0.0	0.0	0.0	0.0	0.0	0.0	0.0
Saturated Capacity (cs), veh/h	0.0	0.0	0.0	0.0	0.0	0.0	0.0	0.0
Initial Queue Clear Time (tc), h	0.0	0.0	0.0	0.0	0.0	0.0	0.0	0.0

Intersection Summary	
HCM Average Control Delay	8.2
HCM Level of Service	A

Movement	EBL	EBR	NBL	NBT	SBT	SBR
Lane Configurations						
Volume (veh/h)	2	0	2	300	83	2
Sign Control	Stop			Free	Free	
Grade	0%			0%	0%	
Peak Hour Factor	0.92	0.92	0.92	0.92	0.92	0.92
Hourly flow rate (vph)	2	0	2	326	90	2
Pedestrians						
Lane Width (ft)						
Walking Speed (ft/s)						
Percent Blockage						
Right turn flare (veh)						
Median type				None	None	
Median storage veh)						
Upstream signal (ft)				296		
pX, platoon unblocked						
vC, conflicting volume	422	91	92			
vC1, stage 1 conf vol						
vC2, stage 2 conf vol						
vCu, unblocked vol	422	91	92			
tC, single (s)	6.4	6.2	4.1			
tC, 2 stage (s)						
tF (s)	3.5	3.3	2.2			
p0 queue free %	100	100	100			
cM capacity (veh/h)	588	966	1502			

Direction, Lane #	EB 1	NB 1	SB 1
Volume Total	2	328	92
Volume Left	2	2	0
Volume Right	0	0	2
cSH	588	1502	1700
Volume to Capacity	0.00	0.00	0.05
Queue Length 95th (ft)	0	0	0
Control Delay (s)	11.1	0.1	0.0
Lane LOS	B	A	
Approach Delay (s)	11.1	0.1	0.0
Approach LOS	B		

Intersection Summary			
Average Delay	0.1		
Intersection Capacity Utilization	27.4%	ICU Level of Service	A
Analysis Period (min)	15		

Movement	EBL	EBR	NBL	NBT	SBT	SBR
Lane Configurations						
Volume (veh/h)	7	1	1	308	85	1
Sign Control	Stop			Free	Free	
Grade	0%			0%	0%	
Peak Hour Factor	0.92	0.92	0.92	0.92	0.92	0.92
Hourly flow rate (vph)	8	1	1	335	92	1
Pedestrians						
Lane Width (ft)						
Walking Speed (ft/s)						
Percent Blockage						
Right turn flare (veh)						
Median type				None	None	
Median storage veh)						
Upstream signal (ft)				581		
pX, platoon unblocked						
vC, conflicting volume	430	93	93			
vC1, stage 1 conf vol						
vC2, stage 2 conf vol						
vCu, unblocked vol	430	93	93			
tC, single (s)	6.4	6.2	4.1			
tC, 2 stage (s)						
tF (s)	3.5	3.3	2.2			
p0 queue free %	99	100	100			
cM capacity (veh/h)	582	964	1501			

Direction, Lane #	EB 1	NB 1	SB 1
Volume Total	9	336	93
Volume Left	8	1	0
Volume Right	1	0	1
cSH	612	1501	1700
Volume to Capacity	0.01	0.00	0.05
Queue Length 95th (ft)	1	0	0
Control Delay (s)	11.0	0.0	0.0
Lane LOS	B	A	
Approach Delay (s)	11.0	0.0	0.0
Approach LOS	B		

Intersection Summary			
Average Delay	0.2		
Intersection Capacity Utilization	27.0%	ICU Level of Service	A
Analysis Period (min)	15		

Movement	EBL	EBR	NBL	NBT	SBT	SBR
Lane Configurations						
Volume (veh/h)	19	11	9	300	75	4
Sign Control	Stop			Free	Free	
Grade	0%			0%	0%	
Peak Hour Factor	0.92	0.92	0.92	0.92	0.92	0.92
Hourly flow rate (vph)	21	12	10	326	82	4
Pedestrians						
Lane Width (ft)						
Walking Speed (ft/s)						
Percent Blockage						
Right turn flare (veh)						
Median type				None	None	
Median storage veh)						
Upstream signal (ft)				866		
pX, platoon unblocked						
vC, conflicting volume	429	84	86			
vC1, stage 1 conf vol						
vC2, stage 2 conf vol						
vCu, unblocked vol	429	84	86			
tC, single (s)	6.4	6.2	4.1			
tC, 2 stage (s)						
tF (s)	3.5	3.3	2.2			
p0 queue free %	96	99	99			
cM capacity (veh/h)	579	976	1510			

Direction, Lane #	EB 1	NB 1	SB 1
Volume Total	33	336	86
Volume Left	21	10	0
Volume Right	12	0	4
cSH	680	1510	1700
Volume to Capacity	0.05	0.01	0.05
Queue Length 95th (ft)	4	0	0
Control Delay (s)	10.6	0.3	0.0
Lane LOS	B	A	
Approach Delay (s)	10.6	0.3	0.0
Approach LOS	B		

Intersection Summary			
Average Delay	1.0		
Intersection Capacity Utilization	33.0%	ICU Level of Service	A
Analysis Period (min)	15		

Movement	EBL	EBR	NBL	NBT	SBT	SBR
Lane Configurations						
Volume (veh/h)	25	21	21	274	48	15
Sign Control	Stop			Free	Free	
Grade	0%			0%	0%	
Peak Hour Factor	0.92	0.92	0.92	0.92	0.92	0.92
Hourly flow rate (vph)	27	23	23	298	52	16
Pedestrians						
Lane Width (ft)						
Walking Speed (ft/s)						
Percent Blockage						
Right turn flare (veh)						
Median type				None	None	
Median storage veh)						
Upstream signal (ft)						
pX, platoon unblocked						
vC, conflicting volume	404	60	68			
vC1, stage 1 conf vol						
vC2, stage 2 conf vol						
vCu, unblocked vol	404	60	68			
tC, single (s)	6.4	6.2	4.1			
tC, 2 stage (s)						
tF (s)	3.5	3.3	2.2			
p0 queue free %	95	98	99			
cM capacity (veh/h)	594	1005	1533			

Direction, Lane #	EB 1	NB 1	SB 1
Volume Total	50	321	68
Volume Left	27	23	0
Volume Right	23	0	16
cSH	730	1533	1700
Volume to Capacity	0.07	0.01	0.04
Queue Length 95th (ft)	5	1	0
Control Delay (s)	10.3	0.6	0.0
Lane LOS	B	A	
Approach Delay (s)	10.3	0.6	0.0
Approach LOS	B		

Intersection Summary			
Average Delay	1.6		
Intersection Capacity Utilization	32.2%	ICU Level of Service	A
Analysis Period (min)	15		

Movement	EBL	EBT	EBR	WBL	WBT	WBR	NBL	NBT	NBR	SBL	SBT	SBR
Lane Configurations												
Sign Control		Stop			Stop			Stop			Stop	
Volume (vph)	4	111	48	33	94	1	20	226	15	1	1	1
Peak Hour Factor	0.92	0.92	0.92	0.92	0.92	0.92	0.92	0.92	0.92	0.92	0.92	0.92
Hourly flow rate (vph)	4	121	52	36	102	1	22	246	16	1	1	1

Direction, Lane #	EB 1	WB 1	NB 1	SB 1
Volume Total (vph)	177	139	284	3
Volume Left (vph)	4	36	22	1
Volume Right (vph)	52	1	16	1
Hadj (s)	-0.14	0.08	0.01	-0.10
Departure Headway (s)	4.7	4.9	4.7	5.0
Degree Utilization, x	0.23	0.19	0.37	0.00
Capacity (veh/h)	718	681	730	650
Control Delay (s)	9.1	9.1	10.4	8.0
Approach Delay (s)	9.1	9.1	10.4	8.0
Approach LOS	A	A	B	A

Intersection Summary			
Delay	9.7		
HCM Level of Service	A		
Intersection Capacity Utilization	40.3%	ICU Level of Service	A
Analysis Period (min)	15		

HCM Unsignalized Intersection Capacity Analysis
1: SW 97th Ave. & SW 174th St.

2/18/2015

Movement	EBL	EBT	EBR	WBL	WBT	WBR	NBL	NBT	NBR	SBL	SBT	SBR
Lane Configurations												
Sign Control		Stop			Stop			Stop			Stop	
Volume (vph)	3	121	32	28	105	2	23	7	12	28	69	4
Peak Hour Factor	0.84	0.84	0.84	0.84	0.84	0.84	0.84	0.84	0.84	0.84	0.84	0.84
Hourly flow rate (vph)	4	144	38	33	125	2	27	8	14	33	82	5

Direction, Lane #	EB 1	WB 1	NB 1	SB 1
Volume Total (vph)	186	161	50	120
Volume Left (vph)	4	33	27	33
Volume Right (vph)	38	2	14	5
Hadj (s)	-0.09	0.07	-0.03	0.07
Departure Headway (s)	4.4	4.6	4.8	4.8
Degree Utilization, x	0.23	0.21	0.07	0.16
Capacity (veh/h)	776	739	681	687
Control Delay (s)	8.8	8.8	8.2	8.8
Approach Delay (s)	8.8	8.8	8.2	8.8
Approach LOS	A	A	A	A

Intersection Summary			
Delay	8.7		
HCM Level of Service	A		
Intersection Capacity Utilization	31.4%	ICU Level of Service	A
Analysis Period (min)	15		

Lane Group	EBL	EBR	NBL	NBT	NBR	SBT	NET
Lane Group Flow (vph)	2	129	4	12	267	84	2233
v/c Ratio	0.02	0.65	0.03	0.04	0.17	0.25	0.58
Control Delay	89.0	109.4	88.2	87.5	0.2	90.5	11.6
Queue Delay	0.0	0.0	0.0	0.0	0.0	0.0	0.0
Total Delay	89.0	109.4	88.2	87.5	0.2	90.5	11.6
Queue Length 50th (ft)	3	100	5	7	0	57	446
Queue Length 95th (ft)	14	147	21	22	0	93	519
Internal Link Dist (ft)	257			1041		665	1300
Turn Bay Length (ft)					200		
Base Capacity (vph)	220	347	125	339	1583	330	3861
Starvation Cap Reductn	0	0	0	0	0	0	0
Spillback Cap Reductn	0	0	0	0	0	0	0
Storage Cap Reductn	0	0	0	0	0	0	0
Reduced v/c Ratio	0.01	0.37	0.03	0.04	0.17	0.25	0.58

Intersection Summary

Movement	EBL	EBR	NBL	NBT	NBR	SBT	SBR	NEL2	NEL	NET	NER
Lane Configurations											
Volume (vph)	2	123	4	11	254	66	14	4	5	2086	27
Ideal Flow (vphpl)	1900	1900	1900	1900	1900	1900	1900	1900	1900	1900	1900
Total Lost time (s)	5.0	5.0	5.0	5.0	4.0	5.0				5.0	
Lane Util. Factor	1.00	0.88	1.00	0.95	1.00	0.95				0.91	
Frt	1.00	0.85	1.00	1.00	0.85	0.97				1.00	
Flt Protected	0.95	1.00	0.95	1.00	1.00	1.00				1.00	
Satd. Flow (prot)	1770	2787	1770	3539	1583	3444				5075	
Flt Permitted	0.95	1.00	0.70	1.00	1.00	1.00				1.00	
Satd. Flow (perm)	1770	2787	1303	3539	1583	3444				5075	
Peak-hour factor, PHF	0.95	0.95	0.95	0.95	0.95	0.95	0.95	0.95	0.95	0.95	0.95
Adj. Flow (vph)	2	129	4	12	267	69	15	4	5	2196	28
RTOR Reduction (vph)	0	0	0	0	0	0	0	0	0	0	0
Lane Group Flow (vph)	2	129	4	12	267	84	0	0	0	2233	0
Turn Type	NA	Perm	Perm	NA	Free	NA		Perm	Perm	NA	
Protected Phases	3			4		8				6	
Permitted Phases		3	4		Free			6	6		
Actuated Green, G (s)	15.0	15.0	20.0	20.0	209.0	20.0				159.0	
Effective Green, g (s)	15.0	15.0	20.0	20.0	209.0	20.0				159.0	
Actuated g/C Ratio	0.07	0.07	0.10	0.10	1.00	0.10				0.76	
Clearance Time (s)	5.0	5.0	5.0	5.0		5.0				5.0	
Vehicle Extension (s)	3.0	3.0	3.0	3.0		3.0				3.0	
Lane Grp Cap (vph)	127	200	125	339	1583	330				3861	
v/s Ratio Prot	0.00			0.00		c0.02					
v/s Ratio Perm		c0.05	0.00		0.17					0.44	
v/c Ratio	0.02	0.65	0.03	0.04	0.17	0.25				0.58	
Uniform Delay, d1	90.1	94.4	85.7	85.7	0.0	87.6				10.7	
Progression Factor	1.00	1.00	1.00	1.00	1.00	1.00				1.00	
Incremental Delay, d2	0.0	7.0	0.5	0.2	0.2	1.9				0.6	
Delay (s)	90.2	101.4	86.2	85.9	0.2	89.4				11.3	
Level of Service	F	F	F	F	A	F				B	
Approach Delay (s)	101.2			5.1		89.4				11.3	
Approach LOS	F			A		F				B	

Intersection Summary			
HCM Average Control Delay	17.4	HCM Level of Service	B
HCM Volume to Capacity ratio	0.55		
Actuated Cycle Length (s)	209.0	Sum of lost time (s)	15.0
Intersection Capacity Utilization	65.3%	ICU Level of Service	C
Analysis Period (min)	15		
c Critical Lane Group			

Movement	EBL	EBR	NBL	NBT	SBT	SBR
Lane Configurations						
Volume (veh/h)	47	38	30	222	89	70
Sign Control	Stop			Free	Free	
Grade	0%			0%	0%	
Peak Hour Factor	0.93	0.93	0.93	0.93	0.93	0.93
Hourly flow rate (vph)	51	41	32	239	96	75
Pedestrians						
Lane Width (ft)						
Walking Speed (ft/s)						
Percent Blockage						
Right turn flare (veh)						
Median type				None	None	
Median storage veh)						
Upstream signal (ft)					1121	
pX, platoon unblocked						
vC, conflicting volume	437	133	171			
vC1, stage 1 conf vol						
vC2, stage 2 conf vol						
vCu, unblocked vol	437	133	171			
tC, single (s)	6.4	6.2	4.1			
tC, 2 stage (s)						
tF (s)	3.5	3.3	2.2			
p0 queue free %	91	96	98			
cM capacity (veh/h)	564	916	1406			

Direction, Lane #	EB 1	NB 1	SB 1
Volume Total	91	271	171
Volume Left	51	32	0
Volume Right	41	0	75
cSH	681	1406	1700
Volume to Capacity	0.13	0.02	0.10
Queue Length 95th (ft)	12	2	0
Control Delay (s)	11.1	1.1	0.0
Lane LOS	B	A	
Approach Delay (s)	11.1	1.1	0.0
Approach LOS	B		

Intersection Summary			
Average Delay	2.5		
Intersection Capacity Utilization	37.2%	ICU Level of Service	A
Analysis Period (min)	15		

Movement	WBL	WBR	NBT	NBR	SBL	SBT
Lane Configurations						
Volume (veh/h)	133	48	193	24	21	82
Sign Control	Stop		Free			Free
Grade	0%		0%			0%
Peak Hour Factor	0.97	0.97	0.97	0.97	0.97	0.97
Hourly flow rate (vph)	137	49	199	25	22	85
Pedestrians						
Lane Width (ft)						
Walking Speed (ft/s)						
Percent Blockage						
Right turn flare (veh)						
Median type			None			None
Median storage veh)						
Upstream signal (ft)						
pX, platoon unblocked						
vC, conflicting volume	339	211			224	
vC1, stage 1 conf vol						
vC2, stage 2 conf vol						
vCu, unblocked vol	339	211			224	
tC, single (s)	6.4	6.2			4.1	
tC, 2 stage (s)						
tF (s)	3.5	3.3			2.2	
p0 queue free %	79	94			98	
cM capacity (veh/h)	646	829			1345	

Direction, Lane #	WB 1	NB 1	SB 1
Volume Total	187	224	106
Volume Left	137	0	22
Volume Right	49	25	0
cSH	686	1700	1345
Volume to Capacity	0.27	0.13	0.02
Queue Length 95th (ft)	28	0	1
Control Delay (s)	12.2	0.0	1.7
Lane LOS	B		A
Approach Delay (s)	12.2	0.0	1.7
Approach LOS	B		

Intersection Summary			
Average Delay	4.8		
Intersection Capacity Utilization	37.4%	ICU Level of Service	A
Analysis Period (min)	15		

Movement	EBL	EBR	NBL	NBT	SBT	SBR
Lane Configurations						
Volume (veh/h)	20	29	6	213	121	92
Sign Control	Stop			Free	Free	
Grade	0%			0%	0%	
Peak Hour Factor	0.94	0.94	0.94	0.94	0.94	0.94
Hourly flow rate (vph)	21	31	6	227	129	98
Pedestrians						
Lane Width (ft)						
Walking Speed (ft/s)						
Percent Blockage						
Right turn flare (veh)						
Median type				None	None	
Median storage veh)						
Upstream signal (ft)				1230		
pX, platoon unblocked						
vC, conflicting volume	417	178	227			
vC1, stage 1 conf vol						
vC2, stage 2 conf vol						
vCu, unblocked vol	417	178	227			
tC, single (s)	6.4	6.2	4.1			
tC, 2 stage (s)						
tF (s)	3.5	3.3	2.2			
p0 queue free %	96	96	100			
cM capacity (veh/h)	589	865	1342			

Direction, Lane #	EB 1	NB 1	SB 1
Volume Total	52	233	227
Volume Left	21	6	0
Volume Right	31	0	98
cSH	727	1342	1700
Volume to Capacity	0.07	0.00	0.13
Queue Length 95th (ft)	6	0	0
Control Delay (s)	10.3	0.3	0.0
Lane LOS	B	A	
Approach Delay (s)	10.3	0.3	0.0
Approach LOS	B		

Intersection Summary			
Average Delay	1.2		
Intersection Capacity Utilization	26.0%	ICU Level of Service	A
Analysis Period (min)	15		

Movement	EBL	EBT	EBR	WBL	WBT	WBR	NBL	NBT	NBR	SBL	SBT	SBR
Lane Configurations												
Volume (veh/h)	3	2	18	52	31	1	2	218	35	1	125	21
Sign Control		Stop			Stop			Free			Free	
Grade		0%			0%			0%			0%	
Peak Hour Factor	0.92	0.92	0.92	0.92	0.92	0.92	0.92	0.92	0.92	0.92	0.92	0.92
Hourly flow rate (vph)	3	2	20	57	34	1	2	237	38	1	136	23
Pedestrians												
Lane Width (ft)												
Walking Speed (ft/s)												
Percent Blockage												
Right turn flare (veh)												
Median type								None			None	
Median storage veh)												
Upstream signal (ft)								904				
pX, platoon unblocked												
vC, conflicting volume	428	429	147	430	421	256	159			275		
vC1, stage 1 conf vol												
vC2, stage 2 conf vol												
vCu, unblocked vol	428	429	147	430	421	256	159			275		
tC, single (s)	7.1	6.5	6.2	7.1	6.5	6.2	4.1			4.1		
tC, 2 stage (s)												
tF (s)	3.5	4.0	3.3	3.5	4.0	3.3	2.2			2.2		
p0 queue free %	99	100	98	89	94	100	100			100		
cM capacity (veh/h)	509	517	900	521	522	783	1421			1288		

Direction, Lane #	EB 1	WB 1	NB 1	SB 1
Volume Total	25	91	277	160
Volume Left	3	57	2	1
Volume Right	20	1	38	23
cSH	773	524	1421	1288
Volume to Capacity	0.03	0.17	0.00	0.00
Queue Length 95th (ft)	3	16	0	0
Control Delay (s)	9.8	13.3	0.1	0.1
Lane LOS	A	B	A	A
Approach Delay (s)	9.8	13.3	0.1	0.1
Approach LOS	A	B		

Intersection Summary			
Average Delay	2.7		
Intersection Capacity Utilization	32.9%	ICU Level of Service	A
Analysis Period (min)	15		

Movement	EBL	EBT	EBR	WBL	WBT	WBR	NBL	NBT	NBR	SBL	SBT	SBR
Lane Configurations												
Volume (veh/h)	1	3	2	0	1	1	2	251	1	0	197	2
Sign Control		Stop			Stop			Free			Free	
Grade		0%			0%			0%			0%	
Peak Hour Factor	0.95	0.95	0.95	0.95	0.95	0.95	0.95	0.95	0.95	0.95	0.95	0.95
Hourly flow rate (vph)	1	3	2	0	1	1	2	264	1	0	207	2
Pedestrians								1				
Lane Width (ft)								12.0				
Walking Speed (ft/s)								4.0				
Percent Blockage								0				
Right turn flare (veh)												
Median type								None			None	
Median storage veh)												
Upstream signal (ft)								601				
pX, platoon unblocked	0.99	0.99		0.99	0.99	0.99				0.99		
vC, conflicting volume	479	478	209	482	478	265	209			265		
vC1, stage 1 conf vol												
vC2, stage 2 conf vol												
vCu, unblocked vol	464	463	209	467	464	247	209			248		
tC, single (s)	7.1	6.5	6.2	7.1	6.5	6.2	4.1			4.1		
tC, 2 stage (s)												
tF (s)	3.5	4.0	3.3	3.5	4.0	3.3	2.2			2.2		
p0 queue free %	100	99	100	100	100	100	100			100		
cM capacity (veh/h)	499	488	830	494	488	781	1361			1300		

Direction, Lane #	EB 1	WB 1	NB 1	SB 1
Volume Total	6	2	267	209
Volume Left	1	0	2	0
Volume Right	2	1	1	2
cSH	568	600	1361	1300
Volume to Capacity	0.01	0.00	0.00	0.00
Queue Length 95th (ft)	1	0	0	0
Control Delay (s)	11.4	11.0	0.1	0.0
Lane LOS	B	B	A	
Approach Delay (s)	11.4	11.0	0.1	0.0
Approach LOS	B	B		

Intersection Summary			
Average Delay	0.2		
Intersection Capacity Utilization	24.9%	ICU Level of Service	A
Analysis Period (min)	15		

Movement	EBL	EBT	EBR	WBL	WBT	WBR	NBL	NBT	NBR	SBL	SBT	SBR
Lane Configurations												
Volume (veh/h)	7	0	22	1	1	1	5	246	2	0	176	22
Sign Control		Stop			Stop			Free			Free	
Grade		0%			0%			0%			0%	
Peak Hour Factor	0.97	0.97	0.97	0.97	0.97	0.97	0.97	0.97	0.97	0.97	0.97	0.97
Hourly flow rate (vph)	7	0	23	1	1	1	5	254	2	0	181	23
Pedestrians												
Lane Width (ft)												
Walking Speed (ft/s)												
Percent Blockage												
Right turn flare (veh)												
Median type								None			None	
Median storage veh)												
Upstream signal (ft)								300				
pX, platoon unblocked	0.90	0.90		0.90	0.90	0.90				0.90		
vC, conflicting volume	459	459	193	480	469	255	204			256		
vC1, stage 1 conf vol												
vC2, stage 2 conf vol												
vCu, unblocked vol	343	343	193	367	354	116	204			117		
tC, single (s)	7.1	6.5	6.2	7.1	6.5	6.2	4.1			4.1		
tC, 2 stage (s)												
tF (s)	3.5	4.0	3.3	3.5	4.0	3.3	2.2			2.2		
p0 queue free %	99	100	97	100	100	100	100			100		
cM capacity (veh/h)	547	520	849	515	512	843	1367			1324		

Direction, Lane #	EB 1	WB 1	NB 1	SB 1
Volume Total	30	3	261	204
Volume Left	7	1	5	0
Volume Right	23	1	2	23
cSH	749	590	1367	1324
Volume to Capacity	0.04	0.01	0.00	0.00
Queue Length 95th (ft)	3	0	0	0
Control Delay (s)	10.0	11.1	0.2	0.0
Lane LOS	B	B	A	
Approach Delay (s)	10.0	11.1	0.2	0.0
Approach LOS	B	B		

Intersection Summary			
Average Delay	0.8		
Intersection Capacity Utilization	27.1%	ICU Level of Service	A
Analysis Period (min)	15		

Lane Group	EBL	EBT	EBR	WBL	WBT	NBL	NBT	SBL	SBT
Lane Group Flow (vph)	144	463	62	186	457	134	324	19	200
v/c Ratio	0.23	0.47	0.19	0.32	0.46	0.30	0.45	0.05	0.33
Control Delay	12.1	18.3	11.3	18.2	31.0	24.6	20.9	27.4	35.0
Queue Delay	0.0	0.0	0.0	0.0	0.0	0.0	0.0	0.0	0.0
Total Delay	12.1	18.3	11.3	18.2	31.0	24.6	20.9	27.4	35.0
Queue Length 50th (ft)	34	61	0	61	112	55	48	8	52
Queue Length 95th (ft)	85	121	38	133	203	115	94	28	99
Internal Link Dist (ft)		1441			531		229		156
Turn Bay Length (ft)	130			95		155		130	
Base Capacity (vph)	995	2429	1015	799	2581	732	1820	576	1773
Starvation Cap Reductn	0	0	0	0	0	0	0	0	0
Spillback Cap Reductn	0	0	0	0	0	0	0	0	0
Storage Cap Reductn	0	0	0	0	0	0	0	0	0
Reduced v/c Ratio	0.14	0.19	0.06	0.23	0.18	0.18	0.18	0.03	0.11

Intersection Summary

Movement	EBL	EBT	EBR	WBL	WBT	WBR	NBL	NBT	NBR	SBL	SBT	SBR
Lane Configurations												
Volume (vph)	131	421	56	169	398	18	122	155	140	17	146	36
Ideal Flow (vphpl)	1900	1900	1900	1900	1900	1900	1900	1900	1900	1900	1900	1900
Total Lost time (s)	3.0	3.0	5.0	3.0	3.0		3.0	3.0		3.0	3.0	
Lane Util. Factor	1.00	0.95	1.00	1.00	0.95		1.00	0.95		1.00	0.95	
Frt	1.00	1.00	0.85	1.00	0.99		1.00	0.93		1.00	0.97	
Flt Protected	0.95	1.00	1.00	0.95	1.00		0.95	1.00		0.95	1.00	
Satd. Flow (prot)	1770	3539	1583	1770	3516		1770	3287		1770	3433	
Flt Permitted	0.49	1.00	1.00	0.49	1.00		0.63	1.00		0.56	1.00	
Satd. Flow (perm)	910	3539	1583	905	3516		1166	3287		1035	3433	
Peak-hour factor, PHF	0.91	0.91	0.91	0.91	0.91	0.91	0.91	0.91	0.91	0.91	0.91	0.91
Adj. Flow (vph)	144	463	62	186	437	20	134	170	154	19	160	40
RTOR Reduction (vph)	0	0	51	0	1	0	0	79	0	0	11	0
Lane Group Flow (vph)	144	463	11	186	456	0	134	245	0	19	189	0
Turn Type	custom	NA	custom	custom	NA		custom	NA		custom	NA	
Protected Phases	1 2	2 4		1 3	3 4		5 6	6 8		5 7	7 8	
Permitted Phases	4		4	4			8			8		
Actuated Green, G (s)	41.0	24.5	16.4	38.0	24.5		26.6	16.7		23.2	16.3	
Effective Green, g (s)	41.0	24.5	16.4	38.0	24.5		26.6	16.7		23.2	16.3	
Actuated g/C Ratio	0.43	0.25	0.17	0.39	0.25		0.28	0.17		0.24	0.17	
Clearance Time (s)			5.0									
Vehicle Extension (s)			3.0									
Lane Grp Cap (vph)	606	899	269	551	894		416	569		338	580	
v/s Ratio Prot	0.06	c0.13		c0.08	c0.13		c0.05	c0.07		0.01	c0.06	
v/s Ratio Perm	0.04		0.01	0.06			0.04			0.01		
v/c Ratio	0.24	0.52	0.04	0.34	0.51		0.32	0.43		0.06	0.33	
Uniform Delay, d1	17.3	30.9	33.4	19.8	30.8		27.3	35.6		28.1	35.2	
Progression Factor	1.00	1.00	1.00	1.00	1.00		1.00	1.00		1.00	1.00	
Incremental Delay, d2	0.2	0.5	0.1	0.4	0.5		0.5	0.5		0.1	0.3	
Delay (s)	17.5	31.4	33.5	20.1	31.3		27.8	36.1		28.2	35.6	
Level of Service	B	C	C	C	C		C	D		C	D	
Approach Delay (s)		28.6			28.0			33.7			34.9	
Approach LOS		C			C			C			C	

Intersection Summary			
HCM Average Control Delay	30.3	HCM Level of Service	C
HCM Volume to Capacity ratio	0.41		
Actuated Cycle Length (s)	96.4	Sum of lost time (s)	18.0
Intersection Capacity Utilization	47.3%	ICU Level of Service	A
Analysis Period (min)	15		
c Critical Lane Group			

Lane Group	EBL	EBT	WBT	SBL
Lane Group Flow (vph)	224	461	559	132
v/c Ratio	1.02	0.38	0.47	0.14
Control Delay	95.9	22.5	23.5	8.0
Queue Delay	0.0	0.0	0.0	0.0
Total Delay	95.9	22.5	23.5	8.0
Queue Length 50th (ft)	~125	100	125	19
Queue Length 95th (ft)	#263	138	168	60
Internal Link Dist (ft)		531	201	216
Turn Bay Length (ft)	75			
Base Capacity (vph)	648	3539	3522	931
Starvation Cap Reductn	0	0	0	0
Spillback Cap Reductn	0	0	0	0
Storage Cap Reductn	0	0	0	0
Reduced v/c Ratio	0.35	0.13	0.16	0.14

Intersection Summary

~ Volume exceeds capacity, queue is theoretically infinite.
Queue shown is maximum after two cycles.

95th percentile volume exceeds capacity, queue may be longer.
Queue shown is maximum after two cycles.

Movement	EBL	EBT	WBT	WBR	SBL	SBR
Lane Configurations						
Volume (vph)	211	433	508	18	34	90
Ideal Flow (vphpl)	1900	1900	1900	1900	1900	1900
Total Lost time (s)	5.0	5.0	5.0		5.0	
Lane Util. Factor	1.00	0.95	0.95		1.00	
Frt	1.00	1.00	0.99		0.90	
Flt Protected	0.95	1.00	1.00		0.99	
Satd. Flow (prot)	1770	3539	3521		1657	
Flt Permitted	0.35	1.00	1.00		0.99	
Satd. Flow (perm)	649	3539	3521		1657	
Peak-hour factor, PHF	0.94	0.94	0.94	0.94	0.94	0.94
Adj. Flow (vph)	224	461	540	19	36	96
RTOR Reduction (vph)	0	0	3	0	25	0
Lane Group Flow (vph)	224	461	556	0	107	0
Turn Type	Perm	NA	NA		NA	
Protected Phases		4	8		6	
Permitted Phases	4					
Actuated Green, G (s)	30.1	30.1	30.1		48.4	
Effective Green, g (s)	30.1	30.1	30.1		48.4	
Actuated g/C Ratio	0.34	0.34	0.34		0.55	
Clearance Time (s)	5.0	5.0	5.0		5.0	
Vehicle Extension (s)	3.0	3.0	3.0		3.0	
Lane Grp Cap (vph)	221	1204	1198		906	
v/s Ratio Prot		0.13	0.16		c0.06	
v/s Ratio Perm	c0.35					
v/c Ratio	1.01	0.38	0.46		0.12	
Uniform Delay, d1	29.2	22.2	22.9		9.7	
Progression Factor	1.00	1.00	1.00		1.00	
Incremental Delay, d2	64.1	0.2	0.3		0.3	
Delay (s)	93.3	22.4	23.2		10.0	
Level of Service	F	C	C		A	
Approach Delay (s)		45.6	23.2		10.0	
Approach LOS		D	C		A	

Intersection Summary			
HCM Average Control Delay	33.0	HCM Level of Service	C
HCM Volume to Capacity ratio	0.46		
Actuated Cycle Length (s)	88.5	Sum of lost time (s)	10.0
Intersection Capacity Utilization	46.2%	ICU Level of Service	A
Analysis Period (min)	15		
c Critical Lane Group			

Queues
11: US-1 & SW 184th St.

2/18/2015

Lane Group	EBL	EBT	EBR	WBL	WBT	WBR	NBL	NBT	NBR	SBL	SBT	SBR
Lane Group Flow (vph)	302	395	112	370	456	18	130	1603	210	199	1935	298
v/c Ratio	0.72	0.73	0.28	0.86	0.47	0.03	0.68	0.71	0.19	0.77	0.80	0.16
Control Delay	69.6	69.1	25.5	57.8	51.5	13.3	47.3	35.3	3.8	53.2	34.5	3.5
Queue Delay	0.0	0.0	0.0	0.0	0.0	0.0	0.0	0.0	0.0	0.0	0.0	0.0
Total Delay	69.6	69.1	25.5	57.8	51.5	13.3	47.3	35.3	3.8	53.2	34.5	3.5
Queue Length 50th (ft)	138	128	40	271	134	1	63	440	24	122	546	15
Queue Length 95th (ft)	200	180	100	403	182	19	145	561	57	222	669	38
Internal Link Dist (ft)		484			394			469			768	
Turn Bay Length (ft)	200		200	286		200	160		200	130		200
Base Capacity (vph)	504	597	423	495	1157	616	225	2242	1196	326	2537	1915
Starvation Cap Reductn	0	0	0	0	0	0	0	0	0	0	0	0
Spillback Cap Reductn	0	0	0	0	0	0	0	0	0	0	0	0
Storage Cap Reductn	0	0	0	0	0	0	0	0	0	0	0	0
Reduced v/c Ratio	0.60	0.66	0.26	0.75	0.39	0.03	0.58	0.71	0.18	0.61	0.76	0.16

Intersection Summary

Movement	EBL	EBT	EBR	WBL	WBT	WBR	NBL	NBT	NBR	SBL	SBT	SBR
Lane Configurations												
Volume (vph)	284	371	105	348	429	17	122	1507	197	187	1819	280
Ideal Flow (vphpl)	1900	1900	1900	1900	1900	1900	1900	1900	1900	1900	1900	1900
Total Lost time (s)	5.0	5.0	3.0	5.0	5.0	3.0	3.0	5.0	5.0	3.0	5.0	5.0
Lane Util. Factor	0.97	0.91	1.00	1.00	0.91	1.00	1.00	0.91	1.00	1.00	0.91	0.88
Frt	1.00	1.00	0.85	1.00	1.00	0.85	1.00	1.00	0.85	1.00	1.00	0.85
Flt Protected	0.95	1.00	1.00	0.95	1.00	1.00	0.95	1.00	1.00	0.95	1.00	1.00
Satd. Flow (prot)	3433	5085	1583	1770	5085	1583	1770	5085	1583	1770	5085	2787
Flt Permitted	0.95	1.00	1.00	0.23	1.00	1.00	0.07	1.00	1.00	0.07	1.00	1.00
Satd. Flow (perm)	3433	5085	1583	433	5085	1583	123	5085	1583	121	5085	2787
Peak-hour factor, PHF	0.94	0.94	0.94	0.94	0.94	0.94	0.94	0.94	0.94	0.94	0.94	0.94
Adj. Flow (vph)	302	395	112	370	456	18	130	1603	210	199	1935	298
RTOR Reduction (vph)	0	0	47	0	0	11	0	0	45	0	0	86
Lane Group Flow (vph)	302	395	65	370	456	7	130	1603	165	199	1935	212
Turn Type	Prot	NA	pm+ov	pm+pt	NA	pm+ov	pm+pt	NA	pm+ov	pm+pt	NA	pm+ov
Protected Phases	7	4	5	3	8	1	5	2	3	1	6	7
Permitted Phases			4	8		8	2		2	6		6
Actuated Green, G (s)	16.8	14.7	25.2	48.2	26.4	41.9	71.2	60.7	89.2	79.2	65.7	82.5
Effective Green, g (s)	16.8	14.7	25.2	48.2	26.4	41.9	71.2	60.7	89.2	79.2	65.7	82.5
Actuated g/C Ratio	0.12	0.11	0.18	0.35	0.19	0.30	0.52	0.44	0.65	0.58	0.48	0.60
Clearance Time (s)	5.0	5.0	3.0	5.0	5.0	3.0	3.0	5.0	5.0	3.0	5.0	5.0
Vehicle Extension (s)	3.0	3.0	3.0	3.0	3.0	3.0	3.0	3.0	3.0	3.0	3.0	3.0
Lane Grp Cap (vph)	420	544	290	429	977	483	190	2246	1085	256	2431	1775
v/s Ratio Prot	0.09	0.08	0.02	c0.18	0.09	0.00	0.05	0.32	0.03	c0.09	c0.38	0.01
v/s Ratio Perm			0.02	c0.12		0.00	0.30		0.07	0.36		0.06
v/c Ratio	0.72	0.73	0.22	0.86	0.47	0.01	0.68	0.71	0.15	0.78	0.80	0.12
Uniform Delay, d1	58.0	59.4	47.8	37.3	49.3	33.3	27.4	31.3	9.4	36.8	30.2	11.8
Progression Factor	1.00	1.00	1.00	1.00	1.00	1.00	1.00	1.00	1.00	1.00	1.00	1.00
Incremental Delay, d2	5.8	4.8	0.4	16.2	0.4	0.0	9.8	2.0	0.1	13.8	1.9	0.0
Delay (s)	63.8	64.2	48.2	53.5	49.6	33.3	37.1	33.2	9.4	50.5	32.1	11.8
Level of Service	E	E	D	D	D	C	D	C	A	D	C	B
Approach Delay (s)		61.8			51.0			30.9			31.1	
Approach LOS		E			D			C			C	

Intersection Summary			
HCM Average Control Delay	38.0	HCM Level of Service	D
HCM Volume to Capacity ratio	0.79		
Actuated Cycle Length (s)	137.4	Sum of lost time (s)	8.0
Intersection Capacity Utilization	84.2%	ICU Level of Service	E
Analysis Period (min)	15		
c Critical Lane Group			

Movement	EBL	EBT	EBR	WBL	WBT	WBR	NBL	NBT	NBR	SBL	SBT	SBR
Lane Configurations												
Volume (vph)	284	371	105	348	429	17	122	1507	197	187	1819	280
Movement Number	7	4	14	3	8	18	5	2	12	1	6	16
Initial Queue, veh	0	0	0	0	0	0	0	0	0	0	0	0
Ped-Bike Adj. Factor (A_pbT)	1.00		1.00	1.00		1.00	1.00		1.00	1.00		1.00
Parking, Bus Adj. Factors	1.00	1.00	1.00	1.00	1.00	1.00	1.00	1.00	1.00	1.00	1.00	1.00
Adj. Sat. Flow Rate, veh/h/ln	1863	1863	1863	1863	1863	1863	1863	1863	1863	1863	1863	1863
Lanes	2	3	1	1	3	1	1	3	1	1	3	2
Lane Assignment												
Capacity, veh/h	370	541	252	420	941	406	200	2492	1071	266	2587	1717
Proportion Arriving On Green	0.11	0.11	0.11	0.19	0.19	0.19	0.05	0.49	0.49	0.07	0.51	0.51
Movement Delay, s/veh	59.6	56.8	48.2	42.7	45.5	34.6	27.6	24.8	7.9	26.1	25.1	10.2
Movement LOS	E	E	D	D	D	C	C	C	A	C	C	B
Approach Volume, veh/h		809			845			1943			2432	
Approach Delay, s/veh		56.6			44.0			23.1			23.4	
Approach LOS		E			D			C			C	

Timer:	1	2	3	4	5	6	7	8
Assigned Phase	1	2	3	4	5	6	7	8
Case No	1.1	3.0	1.1	3.0	1.1	3.0	2.0	3.0
Phase Duration (G+Y+Rc), s	11.85	65.56	28.02	18.14	9.55	67.86	18.30	27.87
Change Period (Y+Rc), s	3.00	5.00	5.00	5.00	3.00	5.00	5.00	5.00
Max. Allowable Headway (MAH), s	4.00	3.92	4.00	3.92	4.00	3.92	4.00	3.92
Maximum Green Setting (Gmax), s	21.00	60.00	35.00	16.00	13.00	68.00	20.00	31.00
Max. Queue Clearance Time (g_c+I1), s	8.39	31.02	21.96	11.29	6.46	39.30	12.61	11.93
Green Extension Time (g_e), s	0.48	24.20	1.07	1.85	0.17	23.56	0.68	3.87
Probability of Phase Call (p_c)	0.999	1.000	1.000	1.000	0.988	1.000	1.000	1.000
Probability of Max Out (p_x)	0.002	0.776	0.011	0.824	0.103	0.778	0.117	0.024

Left-Turn Movement Data				
Assigned Movement	1	3	5	7
Mvmt. Sat Flow, veh/h	1774.04	1774.04	1774.04	3441.64

Through Movement Data				
Assigned Movement	2	4	6	8
Mvmt. Sat Flow, veh/h	5085.29	5085.29	5085.29	5085.29

Right-Turn Movement Data				
Assigned Movement	12	14	16	18
Mvmt. Sat Flow, veh/h	1583.33	1583.33	2786.67	1583.33

Left Lane Group Data								
Assigned Movement	1	0	3	0	5	0	7	0
Lane Assignment	L (Pr/Pm)		L (Pr/Pm)		L (Pr/Pm)		L (Prot)	
Lanes in Group	1	0	1	0	1	0	2	0
Group Volume (v), veh/h	198.9	0.0	370.2	0.0	129.8	0.0	302.1	0.0
Group Sat. Flow (s), veh/h/ln	1774.0	0.0	1774.0	0.0	1774.0	0.0	1720.8	0.0
Queue Serve Time (g_s), s	6.4	0.0	20.0	0.0	4.5	0.0	10.6	0.0
Cycle Queue Clear Time (g_c), s	6.4	0.0	20.0	0.0	4.5	0.0	10.6	0.0

Perm LT Sat Flow Rate (s_l), veh/h/ln	315.5	0.0	985.5	0.0	228.5	0.0	0.0	0.0
Shared LT Sat Flow (s_sh), veh/h/ln	0.0	0.0	0.0	0.0	0.0	0.0	0.0	0.0
Perm LT Eff. Green (g_p), s	64.2	0.0	24.9	0.0	60.6	0.0	0.0	0.0
Perm LT Serve Time (g_u), s	31.5	0.0	3.9	0.0	25.6	0.0	0.0	0.0
Perm LT Que Serve Time (g_ps), s	31.5	0.0	3.9	0.0	25.6	0.0	0.0	0.0
Time to First Blk (g_f), s	0.0	0.0	0.0	0.0	0.0	0.0	0.0	0.0
Serve Time pre Blk (g_fs), s	0.0	0.0	0.0	0.0	0.0	0.0	0.0	0.0
Proportion LT Inside Lane (P_L)	1.000	0.000	1.000	0.000	1.000	0.000	1.000	0.000
Lane Group Capacity (c), veh/h	265.9	0.0	419.5	0.0	199.6	0.0	370.3	0.0
Volume-to-Capacity Ratio (X)	0.748	0.000	0.882	0.000	0.650	0.000	0.816	0.000
Available Capacity (c_a), veh/h	440.3	0.0	591.4	0.0	292.1	0.0	557.0	0.0
Upstream Filter Factor (I)	1.000	0.000	1.000	0.000	1.000	0.000	1.000	0.000
Uniform Delay (d1), s/veh	21.9	0.0	31.6	0.0	24.1	0.0	53.9	0.0
Incremental Delay (d2), s/veh	4.2	0.0	11.0	0.0	3.5	0.0	5.7	0.0
Initial Queue Delay (d3), s/veh	0.0	0.0	0.0	0.0	0.0	0.0	0.0	0.0
Control Delay (d), s/veh	26.1	0.0	42.7	0.0	27.6	0.0	59.6	0.0
First-Term Queue (Q1), veh/ln	3.5	0.0	8.5	0.0	2.2	0.0	4.6	0.0
Second-Term Queue (Q2), veh/ln	0.3	0.0	1.3	0.0	0.2	0.0	0.3	0.0
Third-Term Queue (Q3), veh/ln	0.0	0.0	0.0	0.0	0.0	0.0	0.0	0.0
Percentile bk-of-que factor (f_B%)	1.000	0.000	1.000	0.000	1.000	0.000	1.000	0.000
Percentile Back of Queue (Q%), veh/ln	3.9	0.0	9.8	0.0	2.4	0.0	4.9	0.0
Percentile Storage Ratio (RQ%)	0.75	0.00	0.87	0.00	0.38	0.00	0.62	0.00
Initial Queue (Qb), veh	0.0	0.0	0.0	0.0	0.0	0.0	0.0	0.0
Final (Residual) Queue (Qe), veh	0.0	0.0	0.0	0.0	0.0	0.0	0.0	0.0
Saturated Delay (ds), s/veh	0.0	0.0	0.0	0.0	0.0	0.0	0.0	0.0
Saturated Queue (Qs), veh	0.0	0.0	0.0	0.0	0.0	0.0	0.0	0.0
Saturated Capacity (cs), veh/h	0.0	0.0	0.0	0.0	0.0	0.0	0.0	0.0
Initial Queue Clear Time (tc), h	0.0	0.0	0.0	0.0	0.0	0.0	0.0	0.0

Middle Lane Group Data								
Assigned Movement	0	2	0	4	0	6	0	8
Lane Assignment		T		T		T		T
Lanes in Group	0	3	0	3	0	3	0	3
Group Volume (v), veh/h	0.0	1603.2	0.0	394.7	0.0	1935.1	0.0	456.4
Group Sat. Flow (s), veh/h/ln	0.0	1695.1	0.0	1695.1	0.0	1695.1	0.0	1695.1
Queue Serve Time (g_s), s	0.0	29.0	0.0	9.3	0.0	37.3	0.0	9.9
Cycle Queue Clear Time (g_c), s	0.0	29.0	0.0	9.3	0.0	37.3	0.0	9.9
Lane Group Capacity (c), veh/h	0.0	2492.0	0.0	540.9	0.0	2586.7	0.0	941.2
Volume-to-Capacity Ratio (X)	0.000	0.643	0.000	0.730	0.000	0.748	0.000	0.485
Available Capacity (c_a), veh/h	0.0	2492.0	0.0	658.4	0.0	2798.2	0.0	1275.7
Upstream Filter Factor (I)	0.000	1.000	0.000	1.000	0.000	1.000	0.000	1.000
Uniform Delay (d1), s/veh	0.0	23.5	0.0	53.5	0.0	24.1	0.0	45.1
Incremental Delay (d2), s/veh	0.0	1.3	0.0	3.3	0.0	1.1	0.0	0.4
Initial Queue Delay (d3), s/veh	0.0	0.0	0.0	0.0	0.0	0.0	0.0	0.0
Control Delay (d), s/veh	0.0	24.8	0.0	56.8	0.0	25.1	0.0	45.5
First-Term Queue (Q1), veh/ln	0.0	11.4	0.0	4.0	0.0	14.6	0.0	4.2
Second-Term Queue (Q2), veh/ln	0.0	0.3	0.0	0.2	0.0	0.3	0.0	0.0
Third-Term Queue (Q3), veh/ln	0.0	0.0	0.0	0.0	0.0	0.0	0.0	0.0
Percentile bk-of-que factor (f_B%)	0.000	1.000	0.000	1.000	0.000	1.000	0.000	1.000
Percentile Back of Queue (Q%), veh/ln	0.0	11.7	0.0	4.1	0.0	14.8	0.0	4.2
Percentile Storage Ratio (RQ%)	0.00	0.69	0.00	0.23	0.00	0.54	0.00	0.31

Initial Queue (Qb), veh	0.0	0.0	0.0	0.0	0.0	0.0	0.0	0.0
Final (Residual) Queue (Qe), veh	0.0	0.0	0.0	0.0	0.0	0.0	0.0	0.0
Saturated Delay (ds), s/veh	0.0	0.0	0.0	0.0	0.0	0.0	0.0	0.0
Saturated Queue (Qs), veh	0.0	0.0	0.0	0.0	0.0	0.0	0.0	0.0
Saturated Capacity (cs), veh/h	0.0	0.0	0.0	0.0	0.0	0.0	0.0	0.0
Initial Queue Clear Time (tc), h	0.0	0.0	0.0	0.0	0.0	0.0	0.0	0.0

Right Lane Group Data								
Assigned Movement	0	12	0	14	0	16	0	18
Lane Assignment		R		R		R		R
Lanes in Group	0	1	0	1	0	2	0	1
Group Volume (v), veh/h	0.0	209.6	0.0	111.7	0.0	297.9	0.0	18.1
Group Sat. Flow (s), veh/h/ln	0.0	1583.3	0.0	1583.3	0.0	1393.3	0.0	1583.3
Queue Serve Time (g_s), s	0.0	6.1	0.0	7.9	0.0	5.7	0.0	1.1
Cycle Queue Clear Time (g_c), s	0.0	6.1	0.0	7.9	0.0	5.7	0.0	1.1
Prot RT Sat Flow Rate (s_R), veh/h/ln	0.0	1583.3	0.0	1583.3	0.0	1393.3	0.0	1583.3
Prot RT Eff. Green (g_R), s	0.0	23.0	0.0	6.6	0.0	13.3	0.0	8.9
Proportion RT Outside Lane (P_R)	0.000	1.000	0.000	1.000	0.000	1.000	0.000	1.000
Lane Group Capacity (c), veh/h	0.0	1070.9	0.0	252.4	0.0	1717.3	0.0	406.5
Volume-to-Capacity Ratio (X)	0.000	0.196	0.000	0.443	0.000	0.173	0.000	0.044
Available Capacity (c_a), veh/h	0.0	1070.9	0.0	288.9	0.0	1833.2	0.0	510.6
Upstream Filter Factor (I)	0.000	1.000	0.000	1.000	0.000	1.000	0.000	1.000
Uniform Delay (d1), s/veh	0.0	7.5	0.0	47.0	0.0	10.2	0.0	34.5
Incremental Delay (d2), s/veh	0.0	0.4	0.0	1.2	0.0	0.0	0.0	0.0
Initial Queue Delay (d3), s/veh	0.0	0.0	0.0	0.0	0.0	0.0	0.0	0.0
Control Delay (d), s/veh	0.0	7.9	0.0	48.2	0.0	10.2	0.0	34.6
First-Term Queue (Q1), veh/ln	0.0	2.0	0.0	3.1	0.0	1.7	0.0	0.4
Second-Term Queue (Q2), veh/ln	0.0	0.1	0.0	0.1	0.0	0.0	0.0	0.0
Third-Term Queue (Q3), veh/ln	0.0	0.0	0.0	0.0	0.0	0.0	0.0	0.0
Percentile bk-of-que factor (f_B%)	0.000	1.000	0.000	1.000	0.000	1.000	0.000	1.000
Percentile Back of Queue (Q%), veh/ln	0.0	2.1	0.0	3.2	0.0	1.7	0.0	0.4
Percentile Storage Ratio (RQ%)	0.00	0.27	0.00	0.41	0.00	0.22	0.00	0.05
Initial Queue (Qb), veh	0.0	0.0	0.0	0.0	0.0	0.0	0.0	0.0
Final (Residual) Queue (Qe), veh	0.0	0.0	0.0	0.0	0.0	0.0	0.0	0.0
Saturated Delay (ds), s/veh	0.0	0.0	0.0	0.0	0.0	0.0	0.0	0.0
Saturated Queue (Qs), veh	0.0	0.0	0.0	0.0	0.0	0.0	0.0	0.0
Saturated Capacity (cs), veh/h	0.0	0.0	0.0	0.0	0.0	0.0	0.0	0.0
Initial Queue Clear Time (tc), h	0.0	0.0	0.0	0.0	0.0	0.0	0.0	0.0

Intersection Summary	
HCM Average Control Delay	30.7
HCM Level of Service	C

Lane Group	EBT	WBT	NET
Lane Group Flow (vph)	42	17	2188
v/c Ratio	0.54	0.16	0.47
Control Delay	117.6	46.3	2.3
Queue Delay	0.0	0.0	0.0
Total Delay	117.6	46.3	2.3
Queue Length 50th (ft)	56	5	150
Queue Length 95th (ft)	105	37	212
Internal Link Dist (ft)	48	206	515
Turn Bay Length (ft)			
Base Capacity (vph)	192	244	4625
Starvation Cap Reductn	0	0	0
Spillback Cap Reductn	0	0	0
Storage Cap Reductn	0	0	0
Reduced v/c Ratio	0.22	0.07	0.47

Intersection Summary

Movement	EBL	EBT	EBR	WBL	WBT	WBR	NEL	NET	NER	SWL	SWT	SWR
Lane Configurations												
Volume (vph)	35	5	0	0	4	12	61	1998	20	0	0	0
Ideal Flow (vphpl)	1900	1900	1900	1900	1900	1900	1900	1900	1900	1900	1900	1900
Total Lost time (s)		5.0			5.0			5.0				
Lane Util. Factor		1.00			1.00			0.91				
Frt		1.00			0.90			1.00				
Flt Protected		0.96			1.00			1.00				
Satd. Flow (prot)		1784			1670			5071				
Flt Permitted		0.74			1.00			1.00				
Satd. Flow (perm)		1377			1670			5071				
Peak-hour factor, PHF	0.95	0.95	0.95	0.95	0.95	0.95	0.95	0.95	0.95	0.95	0.95	0.95
Adj. Flow (vph)	37	5	0	0	4	13	64	2103	21	0	0	0
RTOR Reduction (vph)	0	0	0	0	12	0	0	0	0	0	0	0
Lane Group Flow (vph)	0	42	0	0	5	0	0	2188	0	0	0	0
Turn Type	Perm	NA			NA		Split	NA				
Protected Phases		4			8		2	2				
Permitted Phases	4							2				
Actuated Green, G (s)		10.0			10.0			182.3				
Effective Green, g (s)		10.0			10.0			182.3				
Actuated g/C Ratio		0.05			0.05			0.90				
Clearance Time (s)		5.0			5.0			5.0				
Vehicle Extension (s)		3.0			3.0			3.0				
Lane Grp Cap (vph)		68			83			4570				
v/s Ratio Prot					0.00			c0.43				
v/s Ratio Perm		c0.03										
v/c Ratio		0.62			0.06			0.48				
Uniform Delay, d1		94.3			91.7			1.7				
Progression Factor		1.00			1.00			1.00				
Incremental Delay, d2		15.5			0.3			0.4				
Delay (s)		109.8			91.9			2.1				
Level of Service		F			F			A				
Approach Delay (s)		109.8			91.9			2.1			0.0	
Approach LOS		F			F			A			A	

Intersection Summary			
HCM Average Control Delay	4.8	HCM Level of Service	A
HCM Volume to Capacity ratio	0.49		
Actuated Cycle Length (s)	202.3	Sum of lost time (s)	10.0
Intersection Capacity Utilization	57.5%	ICU Level of Service	B
Analysis Period (min)	15		
c Critical Lane Group			

Movement	EBL	EBT	EBR	WBL	WBT	WBR	NEL	NET	NER	SWL	SWT	SWR
Lane Configurations												
Volume (vph)	35	5	0	0	4	12	61	1998	20	0	0	0
Movement Number	7	4	14	3	8	18	5	2	12	1	6	16
Initial Queue, veh	0	0	0	0	0	0	0	0	0	0	0	0
Ped-Bike Adj. Factor (A_pbT)	1.00		1.00	1.00		1.00	1.00		1.00	1.00		1.00
Parking, Bus Adj. Factors	1.00	1.00	1.00	1.00	1.00	1.00	1.00	1.00	1.00	1.00	1.00	1.00
Adj. Sat. Flow Rate, veh/h/ln	1863	1863	1900	1900	1863	1863	1863	1863	1863	1900	1900	1900
Lanes	0	1	0	0	1	0	0	3	0	0	0	0
Lane Assignment												
Capacity, veh/h	74	8	0	0	19	57	139	4846	50	0	0	0
Proportion Arriving On Green	0.05	0.05	0.00	0.00	0.05	0.05	0.90	0.90	0.90	0.00	0.00	0.00
Movement Delay, s/veh	99.3	0.0	0.0	0.0	0.0	93.9	2.5	2.3	2.3	0.0	0.0	0.0
Movement LOS	F					F	A	A	A			
Approach Volume, veh/h		42			17			2188			0	
Approach Delay, s/veh		99.3			93.9			2.4			0.0	
Approach LOS		F			F			A				

Timer:	1	2	3	4	5	6	7	8
Assigned Phase		2		4				8
Case No		12.0		8.0				8.0
Phase Duration (G+Y+Rc), s		187.00		14.36				14.36
Change Period (Y+Rc), s		5.00		5.00				5.00
Max. Allowable Headway (MAH), s		3.91		4.01				4.01
Maximum Green Setting (Gmax), s		182.00		28.00				28.00
Max. Queue Clearance Time (g_c+I1), s		15.91		9.61				3.99
Green Extension Time (g_e), s		13.33		0.11				0.13
Probability of Phase Call (p_c)		1.000		0.963				0.963
Probability of Max Out (p_x)		0.000		0.000				0.000

Left-Turn Movement Data				
Assigned Movement		5		7
Mvmt. Sat Flow, veh/h		153.60		922.93

Through Movement Data				
Assigned Movement		2		4				8
Mvmt. Sat Flow, veh/h		5361.86		131.85				411.26

Right-Turn Movement Data				
Assigned Movement		12		14				18
Mvmt. Sat Flow, veh/h		55.33		0.00				1233.76

Left Lane Group Data								
Assigned Movement	0	5	0	7	0	0	0	0
Lane Assignment		L+T		L+T				
Lanes in Group	0	1	0	1	0	0	0	0
Group Volume (v), veh/h	0.0	775.5	0.0	42.1	0.0	0.0	0.0	0.0
Group Sat. Flow (s), veh/h/ln	0.0	1855.1	0.0	1054.8	0.0	0.0	0.0	0.0
Queue Serve Time (g_s), s	0.0	13.9	0.0	5.6	0.0	0.0	0.0	0.0
Cycle Queue Clear Time (g_c), s	0.0	13.9	0.0	7.6	0.0	0.0	0.0	0.0

Perm LT Sat Flow Rate (s_l), veh/h/ln	0.0	0.0	0.0	791.6	0.0	0.0	0.0	0.0
Shared LT Sat Flow (s_sh), veh/h/ln	0.0	0.0	0.0	1862.7	0.0	0.0	0.0	0.0
Perm LT Eff. Green (g_p), s	0.0	0.0	0.0	9.4	0.0	0.0	0.0	0.0
Perm LT Serve Time (g_u), s	0.0	0.0	0.0	7.4	0.0	0.0	0.0	0.0
Perm LT Que Serve Time (g_ps), s	0.0	0.0	0.0	5.6	0.0	0.0	0.0	0.0
Time to First Blk (g_f), s	0.0	0.0	0.0	0.3	0.0	0.0	0.0	9.4
Serve Time pre Blk (g_fs), s	0.0	0.0	0.0	0.3	0.0	0.0	0.0	0.0
Proportion LT Inside Lane (P_L)	0.000	0.083	0.000	0.875	0.000	0.000	0.000	0.000
Lane Group Capacity (c), veh/h	0.0	1676.7	0.0	82.5	0.0	0.0	0.0	0.0
Volume-to-Capacity Ratio (X)	0.000	0.462	0.000	0.510	0.000	0.000	0.000	0.000
Available Capacity (c_a), veh/h	0.0	1676.7	0.0	160.0	0.0	0.0	0.0	0.0
Upstream Filter Factor (I)	0.000	1.000	0.000	1.000	0.000	0.000	0.000	0.000
Uniform Delay (d1), s/veh	0.0	1.6	0.0	94.5	0.0	0.0	0.0	0.0
Incremental Delay (d2), s/veh	0.0	0.9	0.0	4.8	0.0	0.0	0.0	0.0
Initial Queue Delay (d3), s/veh	0.0	0.0	0.0	0.0	0.0	0.0	0.0	0.0
Control Delay (d), s/veh	0.0	2.5	0.0	99.3	0.0	0.0	0.0	0.0
First-Term Queue (Q1), veh/ln	0.0	3.3	0.0	2.3	0.0	0.0	0.0	0.0
Second-Term Queue (Q2), veh/ln	0.0	0.4	0.0	0.1	0.0	0.0	0.0	0.0
Third-Term Queue (Q3), veh/ln	0.0	0.0	0.0	0.0	0.0	0.0	0.0	0.0
Percentile bk-of-que factor (f_B%)	0.000	1.000	0.000	1.000	0.000	0.000	0.000	0.000
Percentile Back of Queue (Q%), veh/ln	0.0	3.8	0.0	2.4	0.0	0.0	0.0	0.0
Percentile Storage Ratio (RQ%)	0.00	0.17	0.00	0.56	0.00	0.00	0.00	0.00
Initial Queue (Qb), veh	0.0	0.0	0.0	0.0	0.0	0.0	0.0	0.0
Final (Residual) Queue (Qe), veh	0.0	0.0	0.0	0.0	0.0	0.0	0.0	0.0
Saturated Delay (ds), s/veh	0.0	0.0	0.0	0.0	0.0	0.0	0.0	0.0
Saturated Queue (Qs), veh	0.0	0.0	0.0	0.0	0.0	0.0	0.0	0.0
Saturated Capacity (cs), veh/h	0.0	0.0	0.0	0.0	0.0	0.0	0.0	0.0
Initial Queue Clear Time (tc), h	0.0	0.0	0.0	0.0	0.0	0.0	0.0	0.0
Middle Lane Group Data								
Assigned Movement	0	2	0	4	0	0	0	8
Lane Assignment		T						
Lanes in Group	0	1	0	0	0	0	0	0
Group Volume (v), veh/h	0.0	707.9	0.0	0.0	0.0	0.0	0.0	0.0
Group Sat. Flow (s), veh/h/ln	0.0	1862.7	0.0	0.0	0.0	0.0	0.0	0.0
Queue Serve Time (g_s), s	0.0	11.9	0.0	0.0	0.0	0.0	0.0	0.0
Cycle Queue Clear Time (g_c), s	0.0	11.9	0.0	0.0	0.0	0.0	0.0	0.0
Lane Group Capacity (c), veh/h	0.0	1683.7	0.0	0.0	0.0	0.0	0.0	0.0
Volume-to-Capacity Ratio (X)	0.000	0.420	0.000	0.000	0.000	0.000	0.000	0.000
Available Capacity (c_a), veh/h	0.0	1683.7	0.0	0.0	0.0	0.0	0.0	0.0
Upstream Filter Factor (I)	0.000	1.000	0.000	0.000	0.000	0.000	0.000	0.000
Uniform Delay (d1), s/veh	0.0	1.5	0.0	0.0	0.0	0.0	0.0	0.0
Incremental Delay (d2), s/veh	0.0	0.8	0.0	0.0	0.0	0.0	0.0	0.0
Initial Queue Delay (d3), s/veh	0.0	0.0	0.0	0.0	0.0	0.0	0.0	0.0
Control Delay (d), s/veh	0.0	2.3	0.0	0.0	0.0	0.0	0.0	0.0
First-Term Queue (Q1), veh/ln	0.0	2.8	0.0	0.0	0.0	0.0	0.0	0.0
Second-Term Queue (Q2), veh/ln	0.0	0.4	0.0	0.0	0.0	0.0	0.0	0.0
Third-Term Queue (Q3), veh/ln	0.0	0.0	0.0	0.0	0.0	0.0	0.0	0.0
Percentile bk-of-que factor (f_B%)	0.000	1.000	0.000	1.000	0.000	0.000	0.000	1.000
Percentile Back of Queue (Q%), veh/ln	0.0	3.2	0.0	0.0	0.0	0.0	0.0	0.0
Percentile Storage Ratio (RQ%)	0.00	0.15	0.00	0.00	0.00	0.00	0.00	0.00

Initial Queue (Qb), veh	0.0	0.0	0.0	0.0	0.0	0.0	0.0	0.0
Final (Residual) Queue (Qe), veh	0.0	0.0	0.0	0.0	0.0	0.0	0.0	0.0
Saturated Delay (ds), s/veh	0.0	0.0	0.0	0.0	0.0	0.0	0.0	0.0
Saturated Queue (Qs), veh	0.0	0.0	0.0	0.0	0.0	0.0	0.0	0.0
Saturated Capacity (cs), veh/h	0.0	0.0	0.0	0.0	0.0	0.0	0.0	0.0
Initial Queue Clear Time (tc), h	0.0	0.0	0.0	0.0	0.0	0.0	0.0	0.0

Right Lane Group Data								
Assigned Movement	0	12	0	14	0	0	0	18
Lane Assignment		T+R						T+R
Lanes in Group	0	1	0	0	0	0	0	1
Group Volume (v), veh/h	0.0	705.1	0.0	0.0	0.0	0.0	0.0	16.8
Group Sat. Flow (s), veh/h/ln	0.0	1853.0	0.0	0.0	0.0	0.0	0.0	1645.0
Queue Serve Time (g_s), s	0.0	11.9	0.0	0.0	0.0	0.0	0.0	2.0
Cycle Queue Clear Time (g_c), s	0.0	11.9	0.0	0.0	0.0	0.0	0.0	2.0
Prot RT Sat Flow Rate (s_R), veh/h/ln	0.0	0.0	0.0	0.0	0.0	0.0	0.0	0.0
Prot RT Eff. Green (g_R), s	0.0	0.0	0.0	0.0	0.0	0.0	0.0	0.0
Proportion RT Outside Lane (P_R)	0.000	0.030	0.000	0.000	0.000	0.000	0.000	0.750
Lane Group Capacity (c), veh/h	0.0	1674.8	0.0	0.0	0.0	0.0	0.0	76.5
Volume-to-Capacity Ratio (X)	0.000	0.421	0.000	0.000	0.000	0.000	0.000	0.220
Available Capacity (c_a), veh/h	0.0	1674.8	0.0	0.0	0.0	0.0	0.0	228.7
Upstream Filter Factor (I)	0.000	1.000	0.000	0.000	0.000	0.000	0.000	1.000
Uniform Delay (d1), s/veh	0.0	1.5	0.0	0.0	0.0	0.0	0.0	92.5
Incremental Delay (d2), s/veh	0.0	0.8	0.0	0.0	0.0	0.0	0.0	1.4
Initial Queue Delay (d3), s/veh	0.0	0.0	0.0	0.0	0.0	0.0	0.0	0.0
Control Delay (d), s/veh	0.0	2.3	0.0	0.0	0.0	0.0	0.0	93.9
First-Term Queue (Q1), veh/ln	0.0	2.8	0.0	0.0	0.0	0.0	0.0	0.9
Second-Term Queue (Q2), veh/ln	0.0	0.4	0.0	0.0	0.0	0.0	0.0	0.0
Third-Term Queue (Q3), veh/ln	0.0	0.0	0.0	0.0	0.0	0.0	0.0	0.0
Percentile bk-of-que factor (f_B%)	0.000	1.000	0.000	1.000	0.000	0.000	0.000	1.000
Percentile Back of Queue (Q%), veh/ln	0.0	3.2	0.0	0.0	0.0	0.0	0.0	0.9
Percentile Storage Ratio (RQ%)	0.00	0.15	0.00	0.00	0.00	0.00	0.00	0.10
Initial Queue (Qb), veh	0.0	0.0	0.0	0.0	0.0	0.0	0.0	0.0
Final (Residual) Queue (Qe), veh	0.0	0.0	0.0	0.0	0.0	0.0	0.0	0.0
Saturated Delay (ds), s/veh	0.0	0.0	0.0	0.0	0.0	0.0	0.0	0.0
Saturated Queue (Qs), veh	0.0	0.0	0.0	0.0	0.0	0.0	0.0	0.0
Saturated Capacity (cs), veh/h	0.0	0.0	0.0	0.0	0.0	0.0	0.0	0.0
Initial Queue Clear Time (tc), h	0.0	0.0	0.0	0.0	0.0	0.0	0.0	0.0

Intersection Summary	
HCM Average Control Delay	4.9
HCM Level of Service	A

Lane Group	EBT	WBT	NET
Lane Group Flow (vph)	4	102	2455
v/c Ratio	0.02	0.54	0.60
Control Delay	42.2	57.5	5.0
Queue Delay	0.0	0.0	0.6
Total Delay	42.2	57.5	5.6
Queue Length 50th (ft)	3	73	188
Queue Length 95th (ft)	12	118	263
Internal Link Dist (ft)	164	208	477
Turn Bay Length (ft)			
Base Capacity (vph)	314	314	4113
Starvation Cap Reductn	0	0	1105
Spillback Cap Reductn	0	0	0
Storage Cap Reductn	0	0	0
Reduced v/c Ratio	0.01	0.32	0.82

Intersection Summary

Movement	EBL	EBT	EBR	WBL	WBT	WBR	NEL	NET	NER	SWL	SWT	SWR
Lane Configurations												
Volume (vph)	0	4	0	0	91	0	2	2172	12	0	0	0
Ideal Flow (vphpl)	1900	1900	1900	1900	1900	1900	1900	1900	1900	1900	1900	1900
Total Lost time (s)		5.0			5.0			5.0				
Lane Util. Factor		1.00			1.00			0.91				
Frt		1.00			1.00			1.00				
Flt Protected		1.00			1.00			1.00				
Satd. Flow (prot)		1863			1863			5081				
Flt Permitted		1.00			1.00			1.00				
Satd. Flow (perm)		1863			1863			5081				
Peak-hour factor, PHF	0.89	0.89	0.89	0.89	0.89	0.89	0.89	0.89	0.89	0.89	0.89	0.89
Adj. Flow (vph)	0	4	0	0	102	0	2	2440	13	0	0	0
RTOR Reduction (vph)	0	0	0	0	0	0	0	0	0	0	0	0
Lane Group Flow (vph)	0	4	0	0	102	0	0	2455	0	0	0	0
Turn Type	Perm	NA			NA		Perm	NA				
Protected Phases		4			8			2				
Permitted Phases	4						2					
Actuated Green, G (s)		11.5			11.5			91.2				
Effective Green, g (s)		11.5			11.5			91.2				
Actuated g/C Ratio		0.10			0.10			0.81				
Clearance Time (s)		5.0			5.0			5.0				
Vehicle Extension (s)		3.0			3.0			3.0				
Lane Grp Cap (vph)		190			190			4112				
v/s Ratio Prot		0.00			c0.05							
v/s Ratio Perm								0.48				
v/c Ratio		0.02			0.54			0.60				
Uniform Delay, d1		45.5			48.1			4.0				
Progression Factor		1.00			1.00			1.00				
Incremental Delay, d2		0.0			2.9			0.6				
Delay (s)		45.6			51.0			4.6				
Level of Service		D			D			A				
Approach Delay (s)		45.6			51.0			4.6			0.0	
Approach LOS		D			D			A			A	

Intersection Summary			
HCM Average Control Delay	6.5	HCM Level of Service	A
HCM Volume to Capacity ratio	0.59		
Actuated Cycle Length (s)	112.7	Sum of lost time (s)	10.0
Intersection Capacity Utilization	55.4%	ICU Level of Service	B
Analysis Period (min)	15		
c Critical Lane Group			

Movement	EBL	EBT	EBR	WBL	WBT	WBR	NEL	NET	NER	SWL	SWT	SWR
Lane Configurations												
Volume (vph)	0	4	0	0	91	0	2	2172	12	0	0	0
Movement Number	7	4	14	3	8	18	5	2	12	1	6	16
Initial Queue, veh	0	0	0	0	0	0	0	0	0	0	0	0
Ped-Bike Adj. Factor (A_pbT)	1.00		1.00	1.00		1.00	1.00		1.00	1.00		1.00
Parking, Bus Adj. Factors	1.00	1.00	1.00	1.00	1.00	1.00	1.00	1.00	1.00	1.00	1.00	1.00
Adj. Sat. Flow Rate, veh/h/ln	1900	1863	1900	1900	1863	1900	1863	1863	1863	1900	1900	1900
Lanes	0	1	0	0	1	0	0	3	0	0	0	0
Lane Assignment												
Capacity, veh/h	33	134	0	0	134	0	37	4102	23	0	0	0
Proportion Arriving On Green	0.00	0.07	0.00	0.00	0.07	0.00	0.83	0.83	0.83	0.00	0.00	0.00
Movement Delay, s/veh	0.0	42.4	0.0	0.0	53.3	0.0	7.1	4.8	4.8	0.0	0.0	0.0
Movement LOS		D			D		A	A	A			
Approach Volume, veh/h		4			102			2456			0	
Approach Delay, s/veh		42.4			53.3			5.6			0.0	
Approach LOS		D			D			A				

Timer:	1	2	3	4	5	6	7	8
Assigned Phase		2		4				8
Case No		8.0		8.0				8.0
Phase Duration (G+Y+Rc), s		86.00		12.06				12.06
Change Period (Y+Rc), s		5.00		5.00				5.00
Max. Allowable Headway (MAH), s		3.91		3.90				3.90
Maximum Green Setting (Gmax), s		81.00		19.00				19.00
Max. Queue Clearance Time (g_c+I1), s		83.00		2.22				7.29
Green Extension Time (g_e), s		0.00		0.23				0.19
Probability of Phase Call (p_c)		1.000		0.945				0.945
Probability of Max Out (p_x)		1.000		0.000				0.000

Left-Turn Movement Data				
Assigned Movement		5		7
Mvmt. Sat Flow, veh/h		4.57		0.00

Through Movement Data				
Assigned Movement		2		4				8
Mvmt. Sat Flow, veh/h		4961.13		1862.75				1862.75

Right-Turn Movement Data				
Assigned Movement		12		14				18
Mvmt. Sat Flow, veh/h		27.39		0.00				0.00

Left Lane Group Data								
Assigned Movement	0	5	0	7	0	0	0	0
Lane Assignment		L+T						
Lanes in Group	0	1	0	0	0	0	0	0
Group Volume (v), veh/h	0.0	790.5	0.0	0.0	0.0	0.0	0.0	0.0
Group Sat. Flow (s), veh/h/ln	0.0	1607.7	0.0	0.0	0.0	0.0	0.0	0.0
Queue Serve Time (g_s), s	0.0	0.0	0.0	0.0	0.0	0.0	0.0	0.0
Cycle Queue Clear Time (g_c), s	0.0	81.0	0.0	0.0	0.0	0.0	0.0	0.0

Perm LT Sat Flow Rate (s_l), veh/h/ln	0.0	800.0	0.0	0.0	0.0	0.0	0.0	0.0
Shared LT Sat Flow (s_sh), veh/h/ln	0.0	0.0	0.0	1862.7	0.0	0.0	0.0	0.0
Perm LT Eff. Green (g_p), s	0.0	81.0	0.0	0.0	0.0	0.0	0.0	0.0
Perm LT Serve Time (g_u), s	0.0	0.0	0.0	0.0	0.0	0.0	0.0	0.0
Perm LT Que Serve Time (g_ps), s	0.0	0.0	0.0	0.0	0.0	0.0	0.0	0.0
Time to First Blk (g_f), s	0.0	69.9	0.0	7.1	0.0	0.0	0.0	7.1
Serve Time pre Blk (g_fs), s	0.0	17.4	0.0	0.0	0.0	0.0	0.0	0.0
Proportion LT Inside Lane (P_L)	0.000	0.003	0.000	0.000	0.000	0.000	0.000	0.000
Lane Group Capacity (c), veh/h	0.0	1364.8	0.0	0.0	0.0	0.0	0.0	0.0
Volume-to-Capacity Ratio (X)	0.000	0.579	0.000	0.000	0.000	0.000	0.000	0.000
Available Capacity (c_a), veh/h	0.0	1364.8	0.0	0.0	0.0	0.0	0.0	0.0
Upstream Filter Factor (I)	0.000	1.000	0.000	0.000	0.000	0.000	0.000	0.000
Uniform Delay (d1), s/veh	0.0	5.3	0.0	0.0	0.0	0.0	0.0	0.0
Incremental Delay (d2), s/veh	0.0	1.8	0.0	0.0	0.0	0.0	0.0	0.0
Initial Queue Delay (d3), s/veh	0.0	0.0	0.0	0.0	0.0	0.0	0.0	0.0
Control Delay (d), s/veh	0.0	7.1	0.0	0.0	0.0	0.0	0.0	0.0
First-Term Queue (Q1), veh/ln	0.0	5.0	0.0	0.0	0.0	0.0	0.0	0.0
Second-Term Queue (Q2), veh/ln	0.0	0.7	0.0	0.0	0.0	0.0	0.0	0.0
Third-Term Queue (Q3), veh/ln	0.0	0.0	0.0	0.0	0.0	0.0	0.0	0.0
Percentile bk-of-que factor (f_B%)	0.000	1.000	0.000	1.000	0.000	0.000	0.000	0.000
Percentile Back of Queue (Q%), veh/ln	0.0	5.7	0.0	0.0	0.0	0.0	0.0	0.0
Percentile Storage Ratio (RQ%)	0.00	0.30	0.00	0.00	0.00	0.00	0.00	0.00
Initial Queue (Qb), veh	0.0	0.0	0.0	0.0	0.0	0.0	0.0	0.0
Final (Residual) Queue (Qe), veh	0.0	0.0	0.0	0.0	0.0	0.0	0.0	0.0
Saturated Delay (ds), s/veh	0.0	0.0	0.0	0.0	0.0	0.0	0.0	0.0
Saturated Queue (Qs), veh	0.0	0.0	0.0	0.0	0.0	0.0	0.0	0.0
Saturated Capacity (cs), veh/h	0.0	0.0	0.0	0.0	0.0	0.0	0.0	0.0
Initial Queue Clear Time (tc), h	0.0	0.0	0.0	0.0	0.0	0.0	0.0	0.0
Middle Lane Group Data								
Assigned Movement	0	2	0	4	0	0	0	8
Lane Assignment		T		T				T
Lanes in Group	0	1	0	1	0	0	0	1
Group Volume (v), veh/h	0.0	833.5	0.0	4.5	0.0	0.0	0.0	102.2
Group Sat. Flow (s), veh/h/ln	0.0	1695.1	0.0	1862.7	0.0	0.0	0.0	1862.7
Queue Serve Time (g_s), s	0.0	16.5	0.0	0.2	0.0	0.0	0.0	5.3
Cycle Queue Clear Time (g_c), s	0.0	16.5	0.0	0.2	0.0	0.0	0.0	5.3
Lane Group Capacity (c), veh/h	0.0	1400.1	0.0	134.2	0.0	0.0	0.0	134.2
Volume-to-Capacity Ratio (X)	0.000	0.595	0.000	0.033	0.000	0.000	0.000	0.762
Available Capacity (c_a), veh/h	0.0	1400.1	0.0	360.9	0.0	0.0	0.0	360.9
Upstream Filter Factor (I)	0.000	1.000	0.000	1.000	0.000	0.000	0.000	1.000
Uniform Delay (d1), s/veh	0.0	2.9	0.0	42.3	0.0	0.0	0.0	44.7
Incremental Delay (d2), s/veh	0.0	1.9	0.0	0.1	0.0	0.0	0.0	8.6
Initial Queue Delay (d3), s/veh	0.0	0.0	0.0	0.0	0.0	0.0	0.0	0.0
Control Delay (d), s/veh	0.0	4.8	0.0	42.4	0.0	0.0	0.0	53.3
First-Term Queue (Q1), veh/ln	0.0	3.0	0.0	0.1	0.0	0.0	0.0	2.4
Second-Term Queue (Q2), veh/ln	0.0	0.7	0.0	0.0	0.0	0.0	0.0	0.3
Third-Term Queue (Q3), veh/ln	0.0	0.0	0.0	0.0	0.0	0.0	0.0	0.0
Percentile bk-of-que factor (f_B%)	0.000	1.000	0.000	1.000	0.000	0.000	0.000	1.000
Percentile Back of Queue (Q%), veh/ln	0.0	3.8	0.0	0.1	0.0	0.0	0.0	2.7
Percentile Storage Ratio (RQ%)	0.00	0.20	0.00	0.01	0.00	0.00	0.00	0.31

Initial Queue (Qb), veh	0.0	0.0	0.0	0.0	0.0	0.0	0.0	0.0
Final (Residual) Queue (Qe), veh	0.0	0.0	0.0	0.0	0.0	0.0	0.0	0.0
Saturated Delay (ds), s/veh	0.0	0.0	0.0	0.0	0.0	0.0	0.0	0.0
Saturated Queue (Qs), veh	0.0	0.0	0.0	0.0	0.0	0.0	0.0	0.0
Saturated Capacity (cs), veh/h	0.0	0.0	0.0	0.0	0.0	0.0	0.0	0.0
Initial Queue Clear Time (tc), h	0.0	0.0	0.0	0.0	0.0	0.0	0.0	0.0
Right Lane Group Data								
Assigned Movement	0	12	0	14	0	0	0	18
Lane Assignment		T+R						
Lanes in Group	0	1	0	0	0	0	0	0
Group Volume (v), veh/h	0.0	832.2	0.0	0.0	0.0	0.0	0.0	0.0
Group Sat. Flow (s), veh/h/ln	0.0	1690.3	0.0	0.0	0.0	0.0	0.0	0.0
Queue Serve Time (g_s), s	0.0	16.5	0.0	0.0	0.0	0.0	0.0	0.0
Cycle Queue Clear Time (g_c), s	0.0	16.5	0.0	0.0	0.0	0.0	0.0	0.0
Prot RT Sat Flow Rate (s_R), veh/h/ln	0.0	0.0	0.0	0.0	0.0	0.0	0.0	0.0
Prot RT Eff. Green (g_R), s	0.0	0.0	0.0	0.0	0.0	0.0	0.0	0.0
Proportion RT Outside Lane (P_R)	0.000	0.016	0.000	0.000	0.000	0.000	0.000	0.000
Lane Group Capacity (c), veh/h	0.0	1396.2	0.0	0.0	0.0	0.0	0.0	0.0
Volume-to-Capacity Ratio (X)	0.000	0.596	0.000	0.000	0.000	0.000	0.000	0.000
Available Capacity (c_a), veh/h	0.0	1396.2	0.0	0.0	0.0	0.0	0.0	0.0
Upstream Filter Factor (I)	0.000	1.000	0.000	0.000	0.000	0.000	0.000	0.000
Uniform Delay (d1), s/veh	0.0	2.9	0.0	0.0	0.0	0.0	0.0	0.0
Incremental Delay (d2), s/veh	0.0	1.9	0.0	0.0	0.0	0.0	0.0	0.0
Initial Queue Delay (d3), s/veh	0.0	0.0	0.0	0.0	0.0	0.0	0.0	0.0
Control Delay (d), s/veh	0.0	4.8	0.0	0.0	0.0	0.0	0.0	0.0
First-Term Queue (Q1), veh/ln	0.0	3.0	0.0	0.0	0.0	0.0	0.0	0.0
Second-Term Queue (Q2), veh/ln	0.0	0.7	0.0	0.0	0.0	0.0	0.0	0.0
Third-Term Queue (Q3), veh/ln	0.0	0.0	0.0	0.0	0.0	0.0	0.0	0.0
Percentile bk-of-que factor (f_B%)	0.000	1.000	0.000	1.000	0.000	0.000	0.000	1.000
Percentile Back of Queue (Q%), veh/ln	0.0	3.8	0.0	0.0	0.0	0.0	0.0	0.0
Percentile Storage Ratio (RQ%)	0.00	0.20	0.00	0.00	0.00	0.00	0.00	0.00
Initial Queue (Qb), veh	0.0	0.0	0.0	0.0	0.0	0.0	0.0	0.0
Final (Residual) Queue (Qe), veh	0.0	0.0	0.0	0.0	0.0	0.0	0.0	0.0
Saturated Delay (ds), s/veh	0.0	0.0	0.0	0.0	0.0	0.0	0.0	0.0
Saturated Queue (Qs), veh	0.0	0.0	0.0	0.0	0.0	0.0	0.0	0.0
Saturated Capacity (cs), veh/h	0.0	0.0	0.0	0.0	0.0	0.0	0.0	0.0
Initial Queue Clear Time (tc), h	0.0	0.0	0.0	0.0	0.0	0.0	0.0	0.0
Intersection Summary								
HCM Average Control Delay		7.5						
HCM Level of Service		A						

Movement	EBL	EBR	NBL	NBT	SBT	SBR
Lane Configurations						
Volume (veh/h)	1	2	1	250	130	0
Sign Control	Stop			Free	Free	
Grade	0%			0%	0%	
Peak Hour Factor	0.92	0.92	0.92	0.92	0.92	0.92
Hourly flow rate (vph)	1	2	1	272	141	0
Pedestrians						
Lane Width (ft)						
Walking Speed (ft/s)						
Percent Blockage						
Right turn flare (veh)						
Median type				None	None	
Median storage veh)						
Upstream signal (ft)				296		
pX, platoon unblocked						
vC, conflicting volume	415	141	141			
vC1, stage 1 conf vol						
vC2, stage 2 conf vol						
vCu, unblocked vol	415	141	141			
tC, single (s)	6.4	6.2	4.1			
tC, 2 stage (s)						
tF (s)	3.5	3.3	2.2			
p0 queue free %	100	100	100			
cM capacity (veh/h)	593	907	1442			

Direction, Lane #	EB 1	NB 1	SB 1
Volume Total	3	273	141
Volume Left	1	1	0
Volume Right	2	0	0
cSH	771	1442	1700
Volume to Capacity	0.00	0.00	0.08
Queue Length 95th (ft)	0	0	0
Control Delay (s)	9.7	0.0	0.0
Lane LOS	A	A	
Approach Delay (s)	9.7	0.0	0.0
Approach LOS	A		

Intersection Summary			
Average Delay	0.1		
Intersection Capacity Utilization	24.0%	ICU Level of Service	A
Analysis Period (min)	15		

Movement	EBL	EBR	NBL	NBT	SBT	SBR
Lane Configurations						
Volume (veh/h)	4	1	1	252	129	1
Sign Control	Stop			Free	Free	
Grade	0%			0%	0%	
Peak Hour Factor	0.92	0.92	0.92	0.92	0.92	0.92
Hourly flow rate (vph)	4	1	1	274	140	1
Pedestrians						
Lane Width (ft)						
Walking Speed (ft/s)						
Percent Blockage						
Right turn flare (veh)						
Median type				None	None	
Median storage veh)						
Upstream signal (ft)				581		
pX, platoon unblocked						
vC, conflicting volume	417	141	141			
vC1, stage 1 conf vol						
vC2, stage 2 conf vol						
vCu, unblocked vol	417	141	141			
tC, single (s)	6.4	6.2	4.1			
tC, 2 stage (s)						
tF (s)	3.5	3.3	2.2			
p0 queue free %	99	100	100			
cM capacity (veh/h)	592	907	1442			

Direction, Lane #	EB 1	NB 1	SB 1
Volume Total	5	275	141
Volume Left	4	1	0
Volume Right	1	0	1
cSH	636	1442	1700
Volume to Capacity	0.01	0.00	0.08
Queue Length 95th (ft)	1	0	0
Control Delay (s)	10.7	0.0	0.0
Lane LOS	B	A	
Approach Delay (s)	10.7	0.0	0.0
Approach LOS	B		

Intersection Summary			
Average Delay	0.2		
Intersection Capacity Utilization	24.1%	ICU Level of Service	A
Analysis Period (min)	15		

Movement	EBL	EBR	NBL	NBT	SBT	SBR
Lane Configurations						
Volume (veh/h)	4	17	31	223	106	1
Sign Control	Stop			Free	Free	
Grade	0%			0%	0%	
Peak Hour Factor	0.92	0.92	0.92	0.92	0.92	0.92
Hourly flow rate (vph)	4	18	34	242	115	1
Pedestrians						
Lane Width (ft)						
Walking Speed (ft/s)						
Percent Blockage						
Right turn flare (veh)						
Median type				None	None	
Median storage veh)						
Upstream signal (ft)				866		
pX, platoon unblocked						
vC, conflicting volume	426	116	116			
vC1, stage 1 conf vol						
vC2, stage 2 conf vol						
vCu, unblocked vol	426	116	116			
tC, single (s)	6.4	6.2	4.1			
tC, 2 stage (s)						
tF (s)	3.5	3.3	2.2			
p0 queue free %	99	98	98			
cM capacity (veh/h)	572	937	1472			

Direction, Lane #	EB 1	NB 1	SB 1
Volume Total	23	276	116
Volume Left	4	34	0
Volume Right	18	0	1
cSH	835	1472	1700
Volume to Capacity	0.03	0.02	0.07
Queue Length 95th (ft)	2	2	0
Control Delay (s)	9.4	1.1	0.0
Lane LOS	A	A	
Approach Delay (s)	9.4	1.1	0.0
Approach LOS	A		

Intersection Summary			
Average Delay	1.2		
Intersection Capacity Utilization	30.1%	ICU Level of Service	A
Analysis Period (min)	15		

Movement	EBL	EBR	NBL	NBT	SBT	SBR
Lane Configurations						
Volume (veh/h)	19	24	25	187	72	31
Sign Control	Stop			Free	Free	
Grade	0%			0%	0%	
Peak Hour Factor	0.92	0.92	0.92	0.92	0.92	0.92
Hourly flow rate (vph)	21	26	27	203	78	34
Pedestrians						
Lane Width (ft)						
Walking Speed (ft/s)						
Percent Blockage						
Right turn flare (veh)						
Median type				None	None	
Median storage veh)						
Upstream signal (ft)						
pX, platoon unblocked						
vC, conflicting volume	353	95	112			
vC1, stage 1 conf vol						
vC2, stage 2 conf vol						
vCu, unblocked vol	353	95	112			
tC, single (s)	6.4	6.2	4.1			
tC, 2 stage (s)						
tF (s)	3.5	3.3	2.2			
p0 queue free %	97	97	98			
cM capacity (veh/h)	633	962	1478			

Direction, Lane #	EB 1	NB 1	SB 1
Volume Total	47	230	112
Volume Left	21	27	0
Volume Right	26	0	34
cSH	782	1478	1700
Volume to Capacity	0.06	0.02	0.07
Queue Length 95th (ft)	5	1	0
Control Delay (s)	9.9	1.0	0.0
Lane LOS	A	A	
Approach Delay (s)	9.9	1.0	0.0
Approach LOS	A		

Intersection Summary			
Average Delay	1.8		
Intersection Capacity Utilization	27.9%	ICU Level of Service	A
Analysis Period (min)	15		

Movement	EBL	EBT	EBR	WBL	WBT	WBR	NBL	NBT	NBR	SBL	SBT	SBR
Lane Configurations												
Sign Control		Stop			Stop			Stop			Stop	
Volume (vph)	3	100	58	35	104	2	24	161	22	2	4	4
Peak Hour Factor	0.92	0.92	0.92	0.92	0.92	0.92	0.92	0.92	0.92	0.92	0.92	0.92
Hourly flow rate (vph)	3	109	63	38	113	2	26	175	24	2	4	4

Direction, Lane #	EB 1	WB 1	NB 1	SB 1
Volume Total (vph)	175	153	225	11
Volume Left (vph)	3	38	26	2
Volume Right (vph)	63	2	24	4
Hadj (s)	-0.18	0.08	-0.01	-0.17
Departure Headway (s)	4.5	4.8	4.7	4.8
Degree Utilization, x	0.22	0.20	0.29	0.01
Capacity (veh/h)	747	708	725	670
Control Delay (s)	8.8	9.0	9.6	7.9
Approach Delay (s)	8.8	9.0	9.6	7.9
Approach LOS	A	A	A	A

Intersection Summary			
Delay	9.2		
HCM Level of Service	A		
Intersection Capacity Utilization	39.5%	ICU Level of Service	A
Analysis Period (min)	15		

HCM Unsignalized Intersection Capacity Analysis
1: SW 97th Ave. & SW 174th St.

2/18/2015

Movement	EBL	EBT	EBR	WBL	WBT	WBR	NBL	NBT	NBR	SBL	SBT	SBR
Lane Configurations												
Sign Control		Stop			Stop			Stop			Stop	
Volume (vph)	2	131	39	32	144	0	29	10	13	27	67	3
Peak Hour Factor	0.90	0.90	0.90	0.90	0.90	0.90	0.90	0.90	0.90	0.90	0.90	0.90
Hourly flow rate (vph)	2	146	43	36	160	0	32	11	14	30	74	3

Direction, Lane #	EB 1	WB 1	NB 1	SB 1
Volume Total (vph)	191	196	58	108
Volume Left (vph)	2	36	32	30
Volume Right (vph)	43	0	14	3
Hadj (s)	-0.10	0.07	0.00	0.07
Departure Headway (s)	4.5	4.6	5.0	5.0
Degree Utilization, x	0.24	0.25	0.08	0.15
Capacity (veh/h)	771	740	661	667
Control Delay (s)	8.8	9.2	8.4	8.8
Approach Delay (s)	8.8	9.2	8.4	8.8
Approach LOS	A	A	A	A

Intersection Summary			
Delay	8.9		
HCM Level of Service	A		
Intersection Capacity Utilization	34.2%	ICU Level of Service	A
Analysis Period (min)	15		

Queues
2: US-1 & SW 97th Ave. & Evergreen St.

2/18/2015

Lane Group	EBL	EBR	NBL	NBT	NBR	SBT	NET
Lane Group Flow (vph)	4	125	7	8	286	113	2371
v/c Ratio	0.03	0.65	0.06	0.02	0.18	0.35	0.61
Control Delay	90.5	111.4	90.4	88.5	0.3	93.5	12.3
Queue Delay	0.0	0.0	0.0	0.0	0.0	0.0	0.2
Total Delay	90.5	111.4	90.4	88.5	0.3	93.5	12.5
Queue Length 50th (ft)	5	98	9	5	0	78	501
Queue Length 95th (ft)	20	144	31	16	0	121	583
Internal Link Dist (ft)	257			1041		665	1300
Turn Bay Length (ft)					200		
Base Capacity (vph)	201	301	111	335	1583	324	3860
Starvation Cap Reductn	0	0	0	0	0	0	614
Spillback Cap Reductn	0	0	0	0	0	0	0
Storage Cap Reductn	0	0	0	0	0	0	0
Reduced v/c Ratio	0.02	0.42	0.06	0.02	0.18	0.35	0.73

Intersection Summary

Movement	EBL	EBR	NBL	NBT	NBR	SBT	SBR	NEL2	NEL	NET	NER
Lane Configurations											
Volume (vph)	4	120	7	8	275	84	24	4	20	2210	42
Ideal Flow (vphpl)	1900	1900	1900	1900	1900	1900	1900	1900	1900	1900	1900
Total Lost time (s)	5.0	5.0	5.0	5.0	4.0	5.0				5.0	
Lane Util. Factor	1.00	0.88	1.00	0.95	1.00	0.95				0.91	
Frt	1.00	0.85	1.00	1.00	0.85	0.97				1.00	
Flt Protected	0.95	1.00	0.95	1.00	1.00	1.00				1.00	
Satd. Flow (prot)	1770	2647	1770	3539	1583	3422				5068	
Flt Permitted	0.95	1.00	0.63	1.00	1.00	1.00				1.00	
Satd. Flow (perm)	1770	2647	1170	3539	1583	3422				5068	
Peak-hour factor, PHF	0.96	0.96	0.96	0.96	0.96	0.96	0.96	0.96	0.96	0.96	0.96
Adj. Flow (vph)	4	125	7	8	286	88	25	4	21	2302	44
RTOR Reduction (vph)	0	0	0	0	0	0	0	0	0	1	0
Lane Group Flow (vph)	4	125	7	8	286	113	0	0	0	2370	0
Parking (#/hr)		0									
Turn Type	NA	Perm	Perm	NA	Free	NA		Perm	Perm	NA	
Protected Phases	3			4		8				6	
Permitted Phases		3	4		Free			6	6		
Actuated Green, G (s)	15.3	15.3	20.0	20.0	211.3	20.0				161.0	
Effective Green, g (s)	15.3	15.3	20.0	20.0	211.3	20.0				161.0	
Actuated g/C Ratio	0.07	0.07	0.09	0.09	1.00	0.09				0.76	
Clearance Time (s)	5.0	5.0	5.0	5.0		5.0				5.0	
Vehicle Extension (s)	3.0	3.0	3.0	3.0		3.0				3.0	
Lane Grp Cap (vph)	128	192	111	335	1583	324				3862	
v/s Ratio Prot	0.00			0.00		c0.03					
v/s Ratio Perm		c0.05	0.01		0.18					0.47	
v/c Ratio	0.03	0.65	0.06	0.02	0.18	0.35				0.61	
Uniform Delay, d1	91.1	95.4	87.1	86.8	0.0	89.6				11.2	
Progression Factor	1.00	1.00	1.00	1.00	1.00	1.00				1.00	
Incremental Delay, d2	0.1	7.7	1.1	0.1	0.3	2.9				0.7	
Delay (s)	91.2	103.1	88.2	86.9	0.3	92.5				12.0	
Level of Service	F	F	F	F	A	F				B	
Approach Delay (s)	102.7			4.6		92.5				12.0	
Approach LOS	F			A		F				B	

Intersection Summary			
HCM Average Control Delay	18.4	HCM Level of Service	B
HCM Volume to Capacity ratio	0.59		
Actuated Cycle Length (s)	211.3	Sum of lost time (s)	15.0
Intersection Capacity Utilization	68.3%	ICU Level of Service	C
Analysis Period (min)	15		

c Critical Lane Group

Movement	EBL	EBR	NBL	NBT	SBT	SBR
Lane Configurations						
Volume (veh/h)	46	82	20	225	123	75
Sign Control	Stop			Free	Free	
Grade	0%			0%	0%	
Peak Hour Factor	0.92	0.92	0.92	0.92	0.92	0.92
Hourly flow rate (vph)	50	89	22	245	134	82
Pedestrians						
Lane Width (ft)						
Walking Speed (ft/s)						
Percent Blockage						
Right turn flare (veh)						
Median type				None	None	
Median storage veh)						
Upstream signal (ft)					1121	
pX, platoon unblocked	0.99	0.99	0.99			
vC, conflicting volume	462	174	215			
vC1, stage 1 conf vol						
vC2, stage 2 conf vol						
vCu, unblocked vol	453	162	203			
tC, single (s)	6.4	6.2	4.1			
tC, 2 stage (s)						
tF (s)	3.5	3.3	2.2			
p0 queue free %	91	90	98			
cM capacity (veh/h)	551	875	1356			

Direction, Lane #	EB 1	NB 1	SB 1
Volume Total	139	266	215
Volume Left	50	22	0
Volume Right	89	0	82
cSH	722	1356	1700
Volume to Capacity	0.19	0.02	0.13
Queue Length 95th (ft)	18	1	0
Control Delay (s)	11.2	0.8	0.0
Lane LOS	B	A	
Approach Delay (s)	11.2	0.8	0.0
Approach LOS	B		

Intersection Summary			
Average Delay	2.8		
Intersection Capacity Utilization	41.6%	ICU Level of Service	A
Analysis Period (min)	15		

Movement	WBL	WBR	NBT	NBR	SBL	SBT
Lane Configurations						
Volume (veh/h)	139	56	189	37	23	137
Sign Control	Stop		Free			Free
Grade	0%		0%			0%
Peak Hour Factor	0.94	0.94	0.94	0.94	0.94	0.94
Hourly flow rate (vph)	148	60	201	39	24	146
Pedestrians						
Lane Width (ft)						
Walking Speed (ft/s)						
Percent Blockage						
Right turn flare (veh)						
Median type			None			None
Median storage veh)						
Upstream signal (ft)						
pX, platoon unblocked						
vC, conflicting volume	415	221			240	
vC1, stage 1 conf vol						
vC2, stage 2 conf vol						
vCu, unblocked vol	415	221			240	
tC, single (s)	6.4	6.2			4.1	
tC, 2 stage (s)						
tF (s)	3.5	3.3			2.2	
p0 queue free %	75	93			98	
cM capacity (veh/h)	583	819			1326	

Direction, Lane #	WB 1	NB 1	SB 1
Volume Total	207	240	170
Volume Left	148	0	24
Volume Right	60	39	0
cSH	635	1700	1326
Volume to Capacity	0.33	0.14	0.02
Queue Length 95th (ft)	35	0	1
Control Delay (s)	13.4	0.0	1.3
Lane LOS	B		A
Approach Delay (s)	13.4	0.0	1.3
Approach LOS	B		

Intersection Summary			
Average Delay	4.8		
Intersection Capacity Utilization	41.8%	ICU Level of Service	A
Analysis Period (min)	15		

Movement	EBL	EBR	NBL	NBT	SBT	SBR
Lane Configurations						
Volume (veh/h)	15	54	15	225	190	94
Sign Control	Stop			Free	Free	
Grade	0%			0%	0%	
Peak Hour Factor	0.93	0.93	0.93	0.93	0.93	0.93
Hourly flow rate (vph)	16	58	16	242	204	101
Pedestrians						
Lane Width (ft)						
Walking Speed (ft/s)						
Percent Blockage						
Right turn flare (veh)						
Median type				None	None	
Median storage veh)						
Upstream signal (ft)				1230		
pX, platoon unblocked						
vC, conflicting volume	529	255	305			
vC1, stage 1 conf vol						
vC2, stage 2 conf vol						
vCu, unblocked vol	529	255	305			
tC, single (s)	6.4	6.2	4.1			
tC, 2 stage (s)						
tF (s)	3.5	3.3	2.2			
p0 queue free %	97	93	99			
cM capacity (veh/h)	504	784	1255			

Direction, Lane #	EB 1	NB 1	SB 1
Volume Total	74	258	305
Volume Left	16	16	0
Volume Right	58	0	101
cSH	699	1255	1700
Volume to Capacity	0.11	0.01	0.18
Queue Length 95th (ft)	9	1	0
Control Delay (s)	10.8	0.6	0.0
Lane LOS	B	A	
Approach Delay (s)	10.8	0.6	0.0
Approach LOS	B		

Intersection Summary			
Average Delay	1.5		
Intersection Capacity Utilization	35.0%	ICU Level of Service	A
Analysis Period (min)	15		

Movement	EBL	EBT	EBR	WBL	WBT	WBR	NBL	NBT	NBR	SBL	SBT	SBR
Lane Configurations												
Volume (veh/h)	7	6	40	53	30	6	3	232	32	2	211	22
Sign Control		Stop			Stop			Free			Free	
Grade		0%			0%			0%			0%	
Peak Hour Factor	0.87	0.87	0.87	0.87	0.87	0.87	0.87	0.87	0.87	0.87	0.87	0.87
Hourly flow rate (vph)	8	7	46	61	34	7	3	267	37	2	243	25
Pedestrians												
Lane Width (ft)												
Walking Speed (ft/s)												
Percent Blockage												
Right turn flare (veh)												
Median type								None			None	
Median storage veh)												
Upstream signal (ft)								904				
pX, platoon unblocked	0.94	0.94		0.94	0.94	0.94				0.94		
vC, conflicting volume	576	570	255	601	564	285	268			303		
vC1, stage 1 conf vol												
vC2, stage 2 conf vol												
vCu, unblocked vol	516	509	255	543	503	206	268			225		
tC, single (s)	7.1	6.5	6.2	7.1	6.5	6.2	4.1			4.1		
tC, 2 stage (s)												
tF (s)	3.5	4.0	3.3	3.5	4.0	3.3	2.2			2.2		
p0 queue free %	98	98	94	84	92	99	100			100		
cM capacity (veh/h)	410	436	783	392	440	784	1296			1261		

Direction, Lane #	EB 1	WB 1	NB 1	SB 1
Volume Total	61	102	307	270
Volume Left	8	61	3	2
Volume Right	46	7	37	25
cSH	647	422	1296	1261
Volume to Capacity	0.09	0.24	0.00	0.00
Queue Length 95th (ft)	8	23	0	0
Control Delay (s)	11.1	16.2	0.1	0.1
Lane LOS	B	C	A	A
Approach Delay (s)	11.1	16.2	0.1	0.1
Approach LOS	B	C		

Intersection Summary			
Average Delay	3.2		
Intersection Capacity Utilization	34.3%	ICU Level of Service	A
Analysis Period (min)	15		

Movement	EBL	EBT	EBR	WBL	WBT	WBR	NBL	NBT	NBR	SBL	SBT	SBR
Lane Configurations												
Volume (veh/h)	2	3	2	0	0	0	1	270	0	1	296	2
Sign Control		Stop			Stop			Free			Free	
Grade		0%			0%			0%			0%	
Peak Hour Factor	0.91	0.91	0.91	0.91	0.91	0.91	0.91	0.91	0.91	0.91	0.91	0.91
Hourly flow rate (vph)	2	3	2	0	0	0	1	297	0	1	325	2
Pedestrians												
Lane Width (ft)												
Walking Speed (ft/s)												
Percent Blockage												
Right turn flare (veh)												
Median type								None			None	
Median storage veh)												
Upstream signal (ft)								601				
pX, platoon unblocked	0.90	0.90		0.90	0.90	0.90				0.90		
vC, conflicting volume	627	627	326	631	629	297	327			297		
vC1, stage 1 conf vol												
vC2, stage 2 conf vol												
vCu, unblocked vol	526	526	326	530	527	156	327			156		
tC, single (s)	7.1	6.5	6.2	7.1	6.5	6.2	4.1			4.1		
tC, 2 stage (s)												
tF (s)	3.5	4.0	3.3	3.5	4.0	3.3	2.2			2.2		
p0 queue free %	99	99	100	100	100	100	100			100		
cM capacity (veh/h)	414	409	715	407	408	796	1232			1275		

Direction, Lane #	EB 1	WB 1	NB 1	SB 1
Volume Total	8	0	298	329
Volume Left	2	0	1	1
Volume Right	2	0	0	2
cSH	468	1700	1232	1275
Volume to Capacity	0.02	0.00	0.00	0.00
Queue Length 95th (ft)	1	0	0	0
Control Delay (s)	12.8	0.0	0.0	0.0
Lane LOS	B	A	A	A
Approach Delay (s)	12.8	0.0	0.0	0.0
Approach LOS	B	A		

Intersection Summary			
Average Delay	0.2		
Intersection Capacity Utilization	26.4%	ICU Level of Service	A
Analysis Period (min)	15		

Movement	EBL	EBT	EBR	WBL	WBT	WBR	NBL	NBT	NBR	SBL	SBT	SBR
Lane Configurations												
Volume (veh/h)	10	1	65	1	2	1	10	262	1	1	272	22
Sign Control		Stop			Stop			Free			Free	
Grade		0%			0%			0%			0%	
Peak Hour Factor	0.93	0.93	0.93	0.93	0.93	0.93	0.93	0.93	0.93	0.93	0.93	0.93
Hourly flow rate (vph)	11	1	70	1	2	1	11	282	1	1	292	24
Pedestrians												
Lane Width (ft)												
Walking Speed (ft/s)												
Percent Blockage												
Right turn flare (veh)												
Median type								None			None	
Median storage veh)												
Upstream signal (ft)								300				
pX, platoon unblocked	0.85	0.85		0.85	0.85	0.85				0.85		
vC, conflicting volume	612	611	304	681	622	282	316			283		
vC1, stage 1 conf vol												
vC2, stage 2 conf vol												
vCu, unblocked vol	452	450	304	533	464	63	316			63		
tC, single (s)	7.1	6.5	6.2	7.1	6.5	6.2	4.1			4.1		
tC, 2 stage (s)												
tF (s)	3.5	4.0	3.3	3.5	4.0	3.3	2.2			2.2		
p0 queue free %	98	100	90	100	99	100	99			100		
cM capacity (veh/h)	433	423	735	348	416	849	1244			1304		

Direction, Lane #	EB 1	WB 1	NB 1	SB 1
Volume Total	82	4	294	317
Volume Left	11	1	11	1
Volume Right	70	1	1	24
cSH	668	451	1244	1304
Volume to Capacity	0.12	0.01	0.01	0.00
Queue Length 95th (ft)	10	1	1	0
Control Delay (s)	11.1	13.1	0.4	0.0
Lane LOS	B	B	A	A
Approach Delay (s)	11.1	13.1	0.4	0.0
Approach LOS	B	B		

Intersection Summary			
Average Delay	1.6		
Intersection Capacity Utilization	33.2%	ICU Level of Service	A
Analysis Period (min)	15		

Lane Group	EBL	EBT	EBR	WBL	WBT	NBL	NBT	SBL	SBT
Lane Group Flow (vph)	112	576	185	447	602	161	457	25	348
v/c Ratio	0.17	0.57	0.42	0.65	0.60	0.45	0.62	0.07	0.52
Control Delay	14.2	33.2	19.0	27.3	50.9	42.5	42.2	43.0	58.2
Queue Delay	0.0	0.0	0.0	0.1	0.0	0.0	0.0	0.0	0.0
Total Delay	14.2	33.2	19.0	27.4	50.9	42.5	42.2	43.0	58.2
Queue Length 50th (ft)	43	128	36	262	264	111	127	17	154
Queue Length 95th (ft)	91	282	130	444	432	217	229	50	267
Internal Link Dist (ft)		1441			531		229		156
Turn Bay Length (ft)	130			95		155		130	
Base Capacity (vph)	1010	1426	613	901	1411	469	1058	392	1018
Starvation Cap Reductn	0	0	0	31	61	0	0	0	0
Spillback Cap Reductn	0	0	0	0	0	0	0	0	0
Storage Cap Reductn	0	0	0	0	0	0	0	0	0
Reduced v/c Ratio	0.11	0.40	0.30	0.51	0.45	0.34	0.43	0.06	0.34

Intersection Summary

Movement	EBL	EBT	EBR	WBL	WBT	WBR	NBL	NBT	NBR	SBL	SBT	SBR
Lane Configurations												
Volume (vph)	103	530	170	411	543	11	148	197	224	23	274	46
Ideal Flow (vphpl)	1900	1900	1900	1900	1900	1900	1900	1900	1900	1900	1900	1900
Total Lost time (s)	3.0	3.0	5.0	3.0	3.0		3.0	3.0		3.0	3.0	
Lane Util. Factor	1.00	0.95	1.00	1.00	0.95		1.00	0.95		1.00	0.95	
Frt	1.00	1.00	0.85	1.00	1.00		1.00	0.92		1.00	0.98	
Flt Protected	0.95	1.00	1.00	0.95	1.00		0.95	1.00		0.95	1.00	
Satd. Flow (prot)	1770	3539	1583	1770	3529		1770	3257		1770	3463	
Flt Permitted	0.26	1.00	1.00	0.44	1.00		0.42	1.00		0.49	1.00	
Satd. Flow (perm)	491	3539	1583	811	3529		776	3257		910	3463	
Peak-hour factor, PHF	0.92	0.92	0.92	0.92	0.92	0.92	0.92	0.92	0.92	0.92	0.92	0.92
Adj. Flow (vph)	112	576	185	447	590	12	161	214	243	25	298	50
RTOR Reduction (vph)	0	0	110	0	1	0	0	96	0	0	7	0
Lane Group Flow (vph)	112	576	75	447	601	0	161	361	0	25	341	0
Turn Type	custom	NA	custom	custom	NA		custom	NA		custom	NA	
Protected Phases	1 2	2 4		1 3	3 4		5 6	6 8		5 7	7 8	
Permitted Phases	4		4	4			8			8		
Actuated Green, G (s)	77.1	40.2	31.3	73.5	39.6		40.9	27.0		38.2	27.3	
Effective Green, g (s)	77.1	40.2	31.3	73.5	39.6		40.9	27.0		38.2	27.3	
Actuated g/C Ratio	0.52	0.27	0.21	0.50	0.27		0.28	0.18		0.26	0.18	
Clearance Time (s)			5.0									
Vehicle Extension (s)			3.0									
Lane Grp Cap (vph)	652	962	335	677	945		344	595		331	639	
v/s Ratio Prot	0.05	c0.16		c0.19	c0.17		c0.06	c0.11		0.01	c0.10	
v/s Ratio Perm	0.04		0.05	0.14			0.07			0.01		
v/c Ratio	0.17	0.60	0.23	0.66	0.64		0.47	0.61		0.08	0.53	
Uniform Delay, d1	18.6	46.8	48.3	25.0	47.8		42.7	55.6		41.3	54.6	
Progression Factor	1.00	1.00	1.00	1.00	1.00		1.00	1.00		1.00	1.00	
Incremental Delay, d2	0.1	1.0	0.3	2.4	1.4		1.0	1.8		0.1	0.9	
Delay (s)	18.8	47.8	48.6	27.5	49.2		43.7	57.3		41.4	55.4	
Level of Service	B	D	D	C	D		D	E		D	E	
Approach Delay (s)		44.3			39.9			53.8			54.5	
Approach LOS		D			D			D			D	

Intersection Summary			
HCM Average Control Delay	46.0	HCM Level of Service	D
HCM Volume to Capacity ratio	0.59		
Actuated Cycle Length (s)	147.9	Sum of lost time (s)	15.0
Intersection Capacity Utilization	68.0%	ICU Level of Service	C
Analysis Period (min)	15		
c Critical Lane Group			

Lane Group	EBL	EBT	WBT	SBL
Lane Group Flow (vph)	308	649	816	268
v/c Ratio	1.01	0.32	0.41	0.42
Control Delay	79.0	13.1	14.0	29.0
Queue Delay	0.8	0.0	0.0	0.0
Total Delay	79.8	13.1	14.0	29.0
Queue Length 50th (ft)	~245	131	173	83
Queue Length 95th (ft)	422	153	199	340
Internal Link Dist (ft)		531	201	216
Turn Bay Length (ft)	75			
Base Capacity (vph)	510	3375	3362	638
Starvation Cap Reductn	55	883	0	0
Spillback Cap Reductn	0	0	0	0
Storage Cap Reductn	0	0	0	0
Reduced v/c Ratio	0.68	0.26	0.24	0.42

Intersection Summary

~ Volume exceeds capacity, queue is theoretically infinite.
Queue shown is maximum after two cycles.

Movement	EBL	EBT	WBT	WBR	SBL	SBR
Lane Configurations						
Volume (vph)	296	623	763	20	39	218
Ideal Flow (vphpl)	1900	1900	1900	1900	1900	1900
Total Lost time (s)	5.0	5.0	5.0		5.0	
Lane Util. Factor	1.00	0.95	0.95		1.00	
Frt	1.00	1.00	1.00		0.89	
Flt Protected	0.95	1.00	1.00		0.99	
Satd. Flow (prot)	1770	3539	3526		1637	
Flt Permitted	0.29	1.00	1.00		0.99	
Satd. Flow (perm)	535	3539	3526		1637	
Peak-hour factor, PHF	0.96	0.96	0.96	0.96	0.96	0.96
Adj. Flow (vph)	308	649	795	21	41	227
RTOR Reduction (vph)	0	0	2	0	72	0
Lane Group Flow (vph)	308	649	814	0	196	0
Turn Type	Perm	NA	NA		NA	
Protected Phases		4	8		6	
Permitted Phases	4					
Actuated Green, G (s)	74.7	74.7	74.7		45.3	
Effective Green, g (s)	74.7	74.7	74.7		45.3	
Actuated g/C Ratio	0.57	0.57	0.57		0.35	
Clearance Time (s)	5.0	5.0	5.0		5.0	
Vehicle Extension (s)	3.0	3.0	3.0		3.0	
Lane Grp Cap (vph)	307	2034	2026		570	
v/s Ratio Prot		0.18	0.23		c0.12	
v/s Ratio Perm	c0.58					
v/c Ratio	1.00	0.32	0.40		0.34	
Uniform Delay, d1	27.6	14.4	15.3		31.3	
Progression Factor	1.00	1.00	1.00		1.00	
Incremental Delay, d2	52.2	0.1	0.1		1.6	
Delay (s)	79.8	14.5	15.4		33.0	
Level of Service	E	B	B		C	
Approach Delay (s)		35.5	15.4		33.0	
Approach LOS		D	B		C	

Intersection Summary			
HCM Average Control Delay	27.2	HCM Level of Service	C
HCM Volume to Capacity ratio	0.75		
Actuated Cycle Length (s)	130.0	Sum of lost time (s)	10.0
Intersection Capacity Utilization	66.2%	ICU Level of Service	C
Analysis Period (min)	15		
c Critical Lane Group			

Lane Group	EBL	EBT	EBR	WBL	WBT	WBR	NBL	NBT	NBR	SBL	SBT	SBR
Lane Group Flow (vph)	228	528	58	361	422	13	84	1404	437	222	2258	334
v/c Ratio	0.67	0.85	0.16	0.89	0.37	0.02	0.60	0.64	0.40	0.76	0.88	0.18
Control Delay	73.4	75.4	20.6	64.5	48.4	11.5	42.4	34.5	8.8	43.4	37.4	3.9
Queue Delay	0.0	0.0	0.0	0.0	0.0	0.0	0.0	0.0	0.0	0.0	0.0	0.0
Total Delay	73.4	75.4	20.6	64.5	48.4	11.5	42.4	34.5	8.8	43.4	37.4	3.9
Queue Length 50th (ft)	112	188	12	286	127	0	35	394	118	125	713	23
Queue Length 95th (ft)	158	#250	53	#452	165	15	#103	475	202	218	783	44
Internal Link Dist (ft)		484			394			469			768	
Turn Bay Length (ft)	200		200	286		200	160		200	130		200
Base Capacity (vph)	389	649	363	445	1231	675	142	2200	1140	364	2704	1890
Starvation Cap Reductn	0	0	0	0	0	0	0	0	0	0	0	0
Spillback Cap Reductn	0	0	0	0	0	0	0	0	0	0	0	0
Storage Cap Reductn	0	0	0	0	0	0	0	0	0	0	0	0
Reduced v/c Ratio	0.59	0.81	0.16	0.81	0.34	0.02	0.59	0.64	0.38	0.61	0.84	0.18

Intersection Summary

95th percentile volume exceeds capacity, queue may be longer.
Queue shown is maximum after two cycles.

Movement	EBL	EBT	EBR	WBL	WBT	WBR	NBL	NBT	NBR	SBL	SBT	SBR
Lane Configurations												
Volume (vph)	210	486	53	332	388	12	77	1292	402	204	2077	307
Ideal Flow (vphpl)	1900	1900	1900	1900	1900	1900	1900	1900	1900	1900	1900	1900
Total Lost time (s)	5.0	5.0	3.0	5.0	5.0	3.0	3.0	5.0	5.0	3.0	5.0	5.0
Lane Util. Factor	0.97	0.91	1.00	1.00	0.91	1.00	1.00	0.91	1.00	1.00	0.91	0.88
Frt	1.00	1.00	0.85	1.00	1.00	0.85	1.00	1.00	0.85	1.00	1.00	0.85
Flt Protected	0.95	1.00	1.00	0.95	1.00	1.00	0.95	1.00	1.00	0.95	1.00	1.00
Satd. Flow (prot)	3433	5085	1583	1770	5085	1583	1770	5085	1583	1770	5085	2787
Flt Permitted	0.95	1.00	1.00	0.18	1.00	1.00	0.07	1.00	1.00	0.10	1.00	1.00
Satd. Flow (perm)	3433	5085	1583	333	5085	1583	121	5085	1583	178	5085	2787
Peak-hour factor, PHF	0.92	0.92	0.92	0.92	0.92	0.92	0.92	0.92	0.92	0.92	0.92	0.92
Adj. Flow (vph)	228	528	58	361	422	13	84	1404	437	222	2258	334
RTOR Reduction (vph)	0	0	36	0	0	9	0	0	49	0	0	86
Lane Group Flow (vph)	228	528	22	361	422	4	84	1404	388	222	2258	248
Turn Type	Prot	NA	pm+ov	pm+pt	NA	pm+ov	pm+pt	NA	pm+ov	pm+pt	NA	pm+ov
Protected Phases	7	4	5	3	8	1	5	2	3	1	6	7
Permitted Phases			4	8		8	2		2	6		6
Actuated Green, G (s)	14.0	17.4	24.3	50.7	31.7	48.5	68.4	61.5	89.8	81.3	71.4	85.4
Effective Green, g (s)	14.0	17.4	24.3	50.7	31.7	48.5	68.4	61.5	89.8	81.3	71.4	85.4
Actuated g/C Ratio	0.10	0.12	0.17	0.36	0.22	0.34	0.48	0.43	0.63	0.57	0.50	0.60
Clearance Time (s)	5.0	5.0	3.0	5.0	5.0	3.0	3.0	5.0	5.0	3.0	5.0	5.0
Vehicle Extension (s)	3.0	3.0	3.0	3.0	3.0	3.0	3.0	3.0	3.0	3.0	3.0	3.0
Lane Grp Cap (vph)	338	623	271	405	1135	541	138	2202	1057	290	2557	1774
v/s Ratio Prot	0.07	0.10	0.00	c0.18	0.08	0.00	0.03	0.28	0.07	c0.09	c0.44	0.01
v/s Ratio Perm			0.01	c0.14		0.00	0.26		0.17	0.35		0.08
v/c Ratio	0.67	0.85	0.08	0.89	0.37	0.01	0.61	0.64	0.37	0.77	0.88	0.14
Uniform Delay, d1	61.8	61.0	49.5	39.5	46.7	30.9	28.8	31.5	12.5	29.6	31.6	12.3
Progression Factor	1.00	1.00	1.00	1.00	1.00	1.00	1.00	1.00	1.00	1.00	1.00	1.00
Incremental Delay, d2	5.2	10.4	0.1	21.0	0.2	0.0	7.4	1.4	0.2	11.4	4.0	0.0
Delay (s)	67.0	71.4	49.6	60.5	46.9	30.9	36.2	32.9	12.7	41.0	35.6	12.3
Level of Service	E	E	D	E	D	C	D	C	B	D	D	B
Approach Delay (s)		68.6			52.8			28.5			33.2	
Approach LOS		E			D			C			C	

Intersection Summary			
HCM Average Control Delay	38.8	HCM Level of Service	D
HCM Volume to Capacity ratio	0.84		
Actuated Cycle Length (s)	142.0	Sum of lost time (s)	8.0
Intersection Capacity Utilization	88.0%	ICU Level of Service	E
Analysis Period (min)	15		
c Critical Lane Group			

Movement	EBL	EBT	EBR	WBL	WBT	WBR	NBL	NBT	NBR	SBL	SBT	SBR
Lane Configurations												
Volume (vph)	210	486	53	332	388	12	77	1292	402	204	2077	307
Movement Number	7	4	14	3	8	18	5	2	12	1	6	16
Initial Queue, veh	0	0	0	0	0	0	0	0	0	0	0	0
Ped-Bike Adj. Factor (A_pbT)	1.00		1.00	1.00		1.00	1.00		1.00	1.00		1.00
Parking, Bus Adj. Factors	1.00	1.00	1.00	1.00	1.00	1.00	1.00	1.00	1.00	1.00	1.00	1.00
Adj. Sat. Flow Rate, veh/h/ln	1863	1863	1863	1863	1863	1863	1863	1863	1863	1863	1863	1863
Lanes	2	3	1	1	3	1	1	3	1	1	3	2
Lane Assignment												
Capacity, veh/h	286	638	258	392	1122	468	144	2470	1051	297	2661	1690
Proportion Arriving On Green	0.08	0.13	0.13	0.18	0.22	0.22	0.04	0.49	0.49	0.07	0.52	0.52
Movement Delay, s/veh	66.4	64.3	48.6	54.1	44.1	33.2	32.4	25.1	11.5	24.7	29.5	11.7
Movement LOS	E	E	D	D	D	C	C	C	B	C	C	B
Approach Volume, veh/h		814			796			1925			2813	
Approach Delay, s/veh		63.8			48.4			22.4			27.0	
Approach LOS		E			D			C			C	

Timer:	1	2	3	4	5	6	7	8
Assigned Phase	1	2	3	4	5	6	7	8
Case No	1.1	3.0	1.1	3.0	1.1	3.0	2.0	3.0
Phase Duration (G+Y+Rc), s	12.89	69.31	28.60	21.62	7.92	74.28	16.00	34.21
Change Period (Y+Rc), s	3.00	5.00	5.00	5.00	3.00	5.00	5.00	5.00
Max. Allowable Headway (MAH), s	4.00	3.93	4.00	3.91	4.00	3.93	4.00	3.91
Maximum Green Setting (Gmax), s	23.00	59.00	32.00	18.00	7.00	75.00	16.00	34.00
Max. Queue Clearance Time (g_c+I1), s	9.32	27.98	22.72	15.42	5.13	52.41	10.62	11.33
Green Extension Time (g_e), s	0.57	27.23	0.88	1.19	0.03	16.87	0.38	4.26
Probability of Phase Call (p_c)	1.000	1.000	1.000	1.000	0.954	1.000	1.000	1.000
Probability of Max Out (p_x)	0.001	0.841	0.068	1.000	1.000	0.887	0.358	0.012

Left-Turn Movement Data				
Assigned Movement	1	3	5	7
Mvmt. Sat Flow, veh/h	1774.04	1774.04	1774.04	3441.64

Through Movement Data				
Assigned Movement	2	4	6	8
Mvmt. Sat Flow, veh/h	5085.29	5085.29	5085.29	5085.29

Right-Turn Movement Data				
Assigned Movement	12	14	16	18
Mvmt. Sat Flow, veh/h	1583.33	1583.33	2786.67	1583.33

Left Lane Group Data								
Assigned Movement	1	0	3	0	5	0	7	0
Lane Assignment	L (Pr/Pm)		L (Pr/Pm)		L (Pr/Pm)		L (Prot)	
Lanes in Group	1	0	1	0	1	0	2	0
Group Volume (v), veh/h	221.7	0.0	360.9	0.0	83.7	0.0	228.3	0.0
Group Sat. Flow (s), veh/h/ln	1774.0	0.0	1774.0	0.0	1774.0	0.0	1720.8	0.0
Queue Serve Time (g_s), s	7.3	0.0	20.7	0.0	3.1	0.0	8.6	0.0
Cycle Queue Clear Time (g_c), s	7.3	0.0	20.7	0.0	3.1	0.0	8.6	0.0

Perm LT Sat Flow Rate (s_l), veh/h/ln	382.0	0.0	871.4	0.0	166.3	0.0	0.0	0.0
Shared LT Sat Flow (s_sh), veh/h/ln	0.0	0.0	0.0	0.0	0.0	0.0	0.0	0.0
Perm LT Eff. Green (g_p), s	71.3	0.0	31.2	0.0	64.3	0.0	0.0	0.0
Perm LT Serve Time (g_u), s	38.3	0.0	3.2	0.0	18.9	0.0	0.0	0.0
Perm LT Que Serve Time (g_ps), s	38.3	0.0	3.2	0.0	18.9	0.0	0.0	0.0
Time to First Blk (g_f), s	0.0	0.0	0.0	0.0	0.0	0.0	0.0	0.0
Serve Time pre Blk (g_fs), s	0.0	0.0	0.0	0.0	0.0	0.0	0.0	0.0
Proportion LT Inside Lane (P_L)	1.000	0.000	1.000	0.000	1.000	0.000	1.000	0.000
Lane Group Capacity (c), veh/h	297.4	0.0	391.6	0.0	144.0	0.0	285.9	0.0
Volume-to-Capacity Ratio (X)	0.746	0.000	0.922	0.000	0.581	0.000	0.798	0.000
Available Capacity (c_a), veh/h	473.1	0.0	504.1	0.0	171.9	0.0	415.9	0.0
Upstream Filter Factor (I)	1.000	0.000	1.000	0.000	1.000	0.000	1.000	0.000
Uniform Delay (d1), s/veh	21.0	0.0	34.8	0.0	28.8	0.0	59.6	0.0
Incremental Delay (d2), s/veh	3.7	0.0	19.4	0.0	3.7	0.0	6.8	0.0
Initial Queue Delay (d3), s/veh	0.0	0.0	0.0	0.0	0.0	0.0	0.0	0.0
Control Delay (d), s/veh	24.7	0.0	54.1	0.0	32.4	0.0	66.4	0.0
First-Term Queue (Q1), veh/ln	4.0	0.0	8.9	0.0	1.5	0.0	3.8	0.0
Second-Term Queue (Q2), veh/ln	0.3	0.0	2.1	0.0	0.1	0.0	0.3	0.0
Third-Term Queue (Q3), veh/ln	0.0	0.0	0.0	0.0	0.0	0.0	0.0	0.0
Percentile bk-of-que factor (f_B%)	1.000	0.000	1.000	0.000	1.000	0.000	1.000	0.000
Percentile Back of Queue (Q%), veh/ln	4.3	0.0	11.0	0.0	1.6	0.0	4.0	0.0
Percentile Storage Ratio (RQ%)	0.83	0.00	0.98	0.00	0.26	0.00	0.51	0.00
Initial Queue (Qb), veh	0.0	0.0	0.0	0.0	0.0	0.0	0.0	0.0
Final (Residual) Queue (Qe), veh	0.0	0.0	0.0	0.0	0.0	0.0	0.0	0.0
Saturated Delay (ds), s/veh	0.0	0.0	0.0	0.0	0.0	0.0	0.0	0.0
Saturated Queue (Qs), veh	0.0	0.0	0.0	0.0	0.0	0.0	0.0	0.0
Saturated Capacity (cs), veh/h	0.0	0.0	0.0	0.0	0.0	0.0	0.0	0.0
Initial Queue Clear Time (tc), h	0.0	0.0	0.0	0.0	0.0	0.0	0.0	0.0
Middle Lane Group Data								
Assigned Movement	0	2	0	4	0	6	0	8
Lane Assignment		T		T		T		T
Lanes in Group	0	3	0	3	0	3	0	3
Group Volume (v), veh/h	0.0	1404.3	0.0	528.3	0.0	2257.6	0.0	421.7
Group Sat. Flow (s), veh/h/ln	0.0	1695.1	0.0	1695.1	0.0	1695.1	0.0	1695.1
Queue Serve Time (g_s), s	0.0	26.0	0.0	13.4	0.0	50.4	0.0	9.3
Cycle Queue Clear Time (g_c), s	0.0	26.0	0.0	13.4	0.0	50.4	0.0	9.3
Lane Group Capacity (c), veh/h	0.0	2469.9	0.0	638.1	0.0	2660.6	0.0	1121.9
Volume-to-Capacity Ratio (X)	0.000	0.569	0.000	0.828	0.000	0.849	0.000	0.376
Available Capacity (c_a), veh/h	0.0	2469.9	0.0	691.3	0.0	2880.3	0.0	1305.7
Upstream Filter Factor (I)	0.000	1.000	0.000	1.000	0.000	1.000	0.000	1.000
Uniform Delay (d1), s/veh	0.0	24.2	0.0	56.5	0.0	27.1	0.0	43.9
Incremental Delay (d2), s/veh	0.0	1.0	0.0	7.8	0.0	2.4	0.0	0.2
Initial Queue Delay (d3), s/veh	0.0	0.0	0.0	0.0	0.0	0.0	0.0	0.0
Control Delay (d), s/veh	0.0	25.1	0.0	64.3	0.0	29.5	0.0	44.1
First-Term Queue (Q1), veh/ln	0.0	10.4	0.0	5.8	0.0	19.8	0.0	4.0
Second-Term Queue (Q2), veh/ln	0.0	0.2	0.0	0.5	0.0	0.6	0.0	0.0
Third-Term Queue (Q3), veh/ln	0.0	0.0	0.0	0.0	0.0	0.0	0.0	0.0
Percentile bk-of-que factor (f_B%)	0.000	1.000	0.000	1.000	0.000	1.000	0.000	1.000
Percentile Back of Queue (Q%), veh/ln	0.0	10.6	0.0	6.2	0.0	20.4	0.0	4.0
Percentile Storage Ratio (RQ%)	0.00	0.62	0.00	0.35	0.00	0.74	0.00	0.29

Initial Queue (Qb), veh	0.0	0.0	0.0	0.0	0.0	0.0	0.0	0.0
Final (Residual) Queue (Qe), veh	0.0	0.0	0.0	0.0	0.0	0.0	0.0	0.0
Saturated Delay (ds), s/veh	0.0	0.0	0.0	0.0	0.0	0.0	0.0	0.0
Saturated Queue (Qs), veh	0.0	0.0	0.0	0.0	0.0	0.0	0.0	0.0
Saturated Capacity (cs), veh/h	0.0	0.0	0.0	0.0	0.0	0.0	0.0	0.0
Initial Queue Clear Time (tc), h	0.0	0.0	0.0	0.0	0.0	0.0	0.0	0.0

Right Lane Group Data								
Assigned Movement	0	12	0	14	0	16	0	18
Lane Assignment		R		R		R		R
Lanes in Group	0	1	0	1	0	2	0	1
Group Volume (v), veh/h	0.0	437.0	0.0	57.6	0.0	333.7	0.0	13.0
Group Sat. Flow (s), veh/h/ln	0.0	1583.3	0.0	1583.3	0.0	1393.3	0.0	1583.3
Queue Serve Time (g_s), s	0.0	17.0	0.0	4.2	0.0	7.1	0.0	0.8
Cycle Queue Clear Time (g_c), s	0.0	17.0	0.0	4.2	0.0	7.1	0.0	0.8
Prot RT Sat Flow Rate (s_R), veh/h/ln	0.0	1583.3	0.0	1583.3	0.0	1393.3	0.0	1583.3
Prot RT Eff. Green (g_R), s	0.0	23.6	0.0	4.9	0.0	11.0	0.0	9.9
Proportion RT Outside Lane (P_R)	0.000	1.000	0.000	1.000	0.000	1.000	0.000	1.000
Lane Group Capacity (c), veh/h	0.0	1051.2	0.0	257.5	0.0	1689.5	0.0	467.5
Volume-to-Capacity Ratio (X)	0.000	0.416	0.000	0.224	0.000	0.198	0.000	0.028
Available Capacity (c_a), veh/h	0.0	1051.2	0.0	274.1	0.0	1809.9	0.0	524.8
Upstream Filter Factor (I)	0.000	1.000	0.000	1.000	0.000	1.000	0.000	1.000
Uniform Delay (d1), s/veh	0.0	10.3	0.0	48.2	0.0	11.7	0.0	33.2
Incremental Delay (d2), s/veh	0.0	1.2	0.0	0.4	0.0	0.1	0.0	0.0
Initial Queue Delay (d3), s/veh	0.0	0.0	0.0	0.0	0.0	0.0	0.0	0.0
Control Delay (d), s/veh	0.0	11.5	0.0	48.6	0.0	11.7	0.0	33.2
First-Term Queue (Q1), veh/ln	0.0	5.7	0.0	1.7	0.0	2.2	0.0	0.3
Second-Term Queue (Q2), veh/ln	0.0	0.4	0.0	0.0	0.0	0.0	0.0	0.0
Third-Term Queue (Q3), veh/ln	0.0	0.0	0.0	0.0	0.0	0.0	0.0	0.0
Percentile bk-of-que factor (f_B%)	0.000	1.000	0.000	1.000	0.000	1.000	0.000	1.000
Percentile Back of Queue (Q%), veh/ln	0.0	6.1	0.0	1.7	0.0	2.2	0.0	0.3
Percentile Storage Ratio (RQ%)	0.00	0.77	0.00	0.22	0.00	0.28	0.00	0.04
Initial Queue (Qb), veh	0.0	0.0	0.0	0.0	0.0	0.0	0.0	0.0
Final (Residual) Queue (Qe), veh	0.0	0.0	0.0	0.0	0.0	0.0	0.0	0.0
Saturated Delay (ds), s/veh	0.0	0.0	0.0	0.0	0.0	0.0	0.0	0.0
Saturated Queue (Qs), veh	0.0	0.0	0.0	0.0	0.0	0.0	0.0	0.0
Saturated Capacity (cs), veh/h	0.0	0.0	0.0	0.0	0.0	0.0	0.0	0.0
Initial Queue Clear Time (tc), h	0.0	0.0	0.0	0.0	0.0	0.0	0.0	0.0

Intersection Summary	
HCM Average Control Delay	33.0
HCM Level of Service	C

Lane Group	EBT	WBT	NET
Lane Group Flow (vph)	55	25	2007
v/c Ratio	0.59	0.21	0.45
Control Delay	116.3	49.2	2.5
Queue Delay	0.0	0.0	0.0
Total Delay	116.3	49.2	2.5
Queue Length 50th (ft)	73	12	139
Queue Length 95th (ft)	129	48	195
Internal Link Dist (ft)	48	206	515
Turn Bay Length (ft)			
Base Capacity (vph)	232	276	4509
Starvation Cap Reductn	0	0	0
Spillback Cap Reductn	0	0	0
Storage Cap Reductn	0	0	0
Reduced v/c Ratio	0.24	0.09	0.45

Intersection Summary

Movement	EBL	EBT	EBR	WBL	WBT	WBR	NEL	NET	NER	SWL	SWT	SWR
Lane Configurations												
Volume (vph)	29	22	0	0	8	15	38	1810	19	0	0	0
Ideal Flow (vphpl)	1900	1900	1900	1900	1900	1900	1900	1900	1900	1900	1900	1900
Total Lost time (s)		5.0			5.0			5.0				
Lane Util. Factor		1.00			1.00			0.91				
Frt		1.00			0.91			1.00				
Flt Protected		0.97			1.00			1.00				
Satd. Flow (prot)		1812			1702			5073				
Flt Permitted		0.81			1.00			1.00				
Satd. Flow (perm)		1511			1702			5073				
Peak-hour factor, PHF	0.93	0.93	0.93	0.93	0.93	0.93	0.93	0.93	0.93	0.93	0.93	0.93
Adj. Flow (vph)	31	24	0	0	9	16	41	1946	20	0	0	0
RTOR Reduction (vph)	0	0	0	0	15	0	0	0	0	0	0	0
Lane Group Flow (vph)	0	55	0	0	10	0	0	2007	0	0	0	0
Turn Type	Perm	NA			NA		Split	NA				
Protected Phases		4			8		2	2				
Permitted Phases	4							2				
Actuated Green, G (s)		12.5			12.5			179.1				
Effective Green, g (s)		12.5			12.5			179.1				
Actuated g/C Ratio		0.06			0.06			0.89				
Clearance Time (s)		5.0			5.0			5.0				
Vehicle Extension (s)		3.0			3.0			3.0				
Lane Grp Cap (vph)		94			106			4507				
v/s Ratio Prot					0.01			c0.40				
v/s Ratio Perm		c0.04										
v/c Ratio		0.59			0.09			0.45				
Uniform Delay, d1		92.0			89.2			2.1				
Progression Factor		1.00			1.00			1.00				
Incremental Delay, d2		9.0			0.4			0.3				
Delay (s)		101.0			89.6			2.4				
Level of Service		F			F			A				
Approach Delay (s)		101.0			89.6			2.4			0.0	
Approach LOS		F			F			A			A	

Intersection Summary			
HCM Average Control Delay	6.0	HCM Level of Service	A
HCM Volume to Capacity ratio	0.45		
Actuated Cycle Length (s)	201.6	Sum of lost time (s)	10.0
Intersection Capacity Utilization	53.9%	ICU Level of Service	A
Analysis Period (min)	15		
c Critical Lane Group			

Movement	EBL	EBT	EBR	WBL	WBT	WBR	NEL	NET	NER	SWL	SWT	SWR
Lane Configurations												
Volume (vph)	29	22	0	0	8	15	38	1810	19	0	0	0
Movement Number	7	4	14	3	8	18	5	2	12	1	6	16
Initial Queue, veh	0	0	0	0	0	0	0	0	0	0	0	0
Ped-Bike Adj. Factor (A_pbT)	1.00		1.00	1.00		1.00	1.00		1.00	1.00		1.00
Parking, Bus Adj. Factors	1.00	1.00	1.00	1.00	1.00	1.00	1.00	1.00	1.00	1.00	1.00	1.00
Adj. Sat. Flow Rate, veh/h/ln	1863	1863	1900	1900	1863	1863	1863	1863	1863	1900	1900	1900
Lanes	0	1	0	0	1	0	0	3	0	0	0	0
Lane Assignment												
Capacity, veh/h	60	34	0	0	30	56	96	4858	53	0	0	0
Proportion Arriving On Green	0.05	0.05	0.00	0.00	0.05	0.05	0.90	0.90	0.90	0.00	0.00	0.00
Movement Delay, s/veh	98.7	0.0	0.0	0.0	0.0	92.8	2.5	2.3	2.3	0.0	0.0	0.0
Movement LOS	F					F	A	A	A			
Approach Volume, veh/h		55			25			2008			0	
Approach Delay, s/veh		98.7			92.8			2.3			0.0	
Approach LOS		F			F			A				

Timer:	1	2	3	4	5	6	7	8
Assigned Phase		2		4				8
Case No		12.0		8.0				8.0
Phase Duration (G+Y+Rc), s		184.00		15.24				15.24
Change Period (Y+Rc), s		5.00		5.00				5.00
Max. Allowable Headway (MAH), s		3.91		4.00				4.00
Maximum Green Setting (Gmax), s		179.00		31.00				31.00
Max. Queue Clearance Time (g_c+I1), s		14.58		10.19				4.84
Green Extension Time (g_e), s		10.98		0.18				0.20
Probability of Phase Call (p_c)		1.000		0.988				0.988
Probability of Max Out (p_x)		0.000		0.000				0.000

Left-Turn Movement Data				
Assigned Movement		5		7
Mvmt. Sat Flow, veh/h		106.61		718.32

Through Movement Data				
Assigned Movement		2		4				8
Mvmt. Sat Flow, veh/h		5407.40		544.93				581.04

Right-Turn Movement Data				
Assigned Movement		12		14				18
Mvmt. Sat Flow, veh/h		58.56		0.00				1089.45

Left Lane Group Data								
Assigned Movement	0	5	0	7	0	0	0	0
Lane Assignment		L+T		L+T				
Lanes in Group	0	1	0	1	0	0	0	0
Group Volume (v), veh/h	0.0	711.9	0.0	54.8	0.0	0.0	0.0	0.0
Group Sat. Flow (s), veh/h/ln	0.0	1857.4	0.0	1263.3	0.0	0.0	0.0	0.0
Queue Serve Time (g_s), s	0.0	12.6	0.0	5.3	0.0	0.0	0.0	0.0
Cycle Queue Clear Time (g_c), s	0.0	12.6	0.0	8.2	0.0	0.0	0.0	0.0

Perm LT Sat Flow Rate (s_l), veh/h/ln	0.0	0.0	0.0	787.7	0.0	0.0	0.0	0.0
Shared LT Sat Flow (s_sh), veh/h/ln	0.0	0.0	0.0	1862.7	0.0	0.0	0.0	0.0
Perm LT Eff. Green (g_p), s	0.0	0.0	0.0	10.2	0.0	0.0	0.0	0.0
Perm LT Serve Time (g_u), s	0.0	0.0	0.0	7.4	0.0	0.0	0.0	0.0
Perm LT Que Serve Time (g_ps), s	0.0	0.0	0.0	5.3	0.0	0.0	0.0	0.0
Time to First Blk (g_f), s	0.0	0.0	0.0	1.0	0.0	0.0	0.0	10.2
Serve Time pre Blk (g_fs), s	0.0	0.0	0.0	1.0	0.0	0.0	0.0	0.0
Proportion LT Inside Lane (P_L)	0.000	0.057	0.000	0.569	0.000	0.000	0.000	0.000
Lane Group Capacity (c), veh/h	0.0	1668.7	0.0	93.3	0.0	0.0	0.0	0.0
Volume-to-Capacity Ratio (X)	0.000	0.427	0.000	0.588	0.000	0.000	0.000	0.000
Available Capacity (c_a), veh/h	0.0	1668.7	0.0	200.9	0.0	0.0	0.0	0.0
Upstream Filter Factor (I)	0.000	1.000	0.000	1.000	0.000	0.000	0.000	0.000
Uniform Delay (d1), s/veh	0.0	1.7	0.0	92.9	0.0	0.0	0.0	0.0
Incremental Delay (d2), s/veh	0.0	0.8	0.0	5.8	0.0	0.0	0.0	0.0
Initial Queue Delay (d3), s/veh	0.0	0.0	0.0	0.0	0.0	0.0	0.0	0.0
Control Delay (d), s/veh	0.0	2.5	0.0	98.7	0.0	0.0	0.0	0.0
First-Term Queue (Q1), veh/ln	0.0	3.2	0.0	2.9	0.0	0.0	0.0	0.0
Second-Term Queue (Q2), veh/ln	0.0	0.4	0.0	0.1	0.0	0.0	0.0	0.0
Third-Term Queue (Q3), veh/ln	0.0	0.0	0.0	0.0	0.0	0.0	0.0	0.0
Percentile bk-of-que factor (f_B%)	0.000	1.000	0.000	1.000	0.000	0.000	0.000	0.000
Percentile Back of Queue (Q%), veh/ln	0.0	3.5	0.0	3.1	0.0	0.0	0.0	0.0
Percentile Storage Ratio (RQ%)	0.00	0.16	0.00	0.73	0.00	0.00	0.00	0.00
Initial Queue (Qb), veh	0.0	0.0	0.0	0.0	0.0	0.0	0.0	0.0
Final (Residual) Queue (Qe), veh	0.0	0.0	0.0	0.0	0.0	0.0	0.0	0.0
Saturated Delay (ds), s/veh	0.0	0.0	0.0	0.0	0.0	0.0	0.0	0.0
Saturated Queue (Qs), veh	0.0	0.0	0.0	0.0	0.0	0.0	0.0	0.0
Saturated Capacity (cs), veh/h	0.0	0.0	0.0	0.0	0.0	0.0	0.0	0.0
Initial Queue Clear Time (tc), h	0.0	0.0	0.0	0.0	0.0	0.0	0.0	0.0
Middle Lane Group Data								
Assigned Movement	0	2	0	4	0	0	0	8
Lane Assignment		T						
Lanes in Group	0	1	0	0	0	0	0	0
Group Volume (v), veh/h	0.0	649.4	0.0	0.0	0.0	0.0	0.0	0.0
Group Sat. Flow (s), veh/h/ln	0.0	1862.7	0.0	0.0	0.0	0.0	0.0	0.0
Queue Serve Time (g_s), s	0.0	10.8	0.0	0.0	0.0	0.0	0.0	0.0
Cycle Queue Clear Time (g_c), s	0.0	10.8	0.0	0.0	0.0	0.0	0.0	0.0
Lane Group Capacity (c), veh/h	0.0	1673.5	0.0	0.0	0.0	0.0	0.0	0.0
Volume-to-Capacity Ratio (X)	0.000	0.388	0.000	0.000	0.000	0.000	0.000	0.000
Available Capacity (c_a), veh/h	0.0	1673.5	0.0	0.0	0.0	0.0	0.0	0.0
Upstream Filter Factor (I)	0.000	1.000	0.000	0.000	0.000	0.000	0.000	0.000
Uniform Delay (d1), s/veh	0.0	1.6	0.0	0.0	0.0	0.0	0.0	0.0
Incremental Delay (d2), s/veh	0.0	0.7	0.0	0.0	0.0	0.0	0.0	0.0
Initial Queue Delay (d3), s/veh	0.0	0.0	0.0	0.0	0.0	0.0	0.0	0.0
Control Delay (d), s/veh	0.0	2.3	0.0	0.0	0.0	0.0	0.0	0.0
First-Term Queue (Q1), veh/ln	0.0	2.7	0.0	0.0	0.0	0.0	0.0	0.0
Second-Term Queue (Q2), veh/ln	0.0	0.3	0.0	0.0	0.0	0.0	0.0	0.0
Third-Term Queue (Q3), veh/ln	0.0	0.0	0.0	0.0	0.0	0.0	0.0	0.0
Percentile bk-of-que factor (f_B%)	0.000	1.000	0.000	1.000	0.000	0.000	0.000	1.000
Percentile Back of Queue (Q%), veh/ln	0.0	3.0	0.0	0.0	0.0	0.0	0.0	0.0
Percentile Storage Ratio (RQ%)	0.00	0.14	0.00	0.00	0.00	0.00	0.00	0.00

Initial Queue (Qb), veh	0.0	0.0	0.0	0.0	0.0	0.0	0.0	0.0
Final (Residual) Queue (Qe), veh	0.0	0.0	0.0	0.0	0.0	0.0	0.0	0.0
Saturated Delay (ds), s/veh	0.0	0.0	0.0	0.0	0.0	0.0	0.0	0.0
Saturated Queue (Qs), veh	0.0	0.0	0.0	0.0	0.0	0.0	0.0	0.0
Saturated Capacity (cs), veh/h	0.0	0.0	0.0	0.0	0.0	0.0	0.0	0.0
Initial Queue Clear Time (tc), h	0.0	0.0	0.0	0.0	0.0	0.0	0.0	0.0

Right Lane Group Data								
Assigned Movement	0	12	0	14	0	0	0	18
Lane Assignment		T+R						T+R
Lanes in Group	0	1	0	0	0	0	0	1
Group Volume (v), veh/h	0.0	646.3	0.0	0.0	0.0	0.0	0.0	24.7
Group Sat. Flow (s), veh/h/ln	0.0	1852.4	0.0	0.0	0.0	0.0	0.0	1670.5
Queue Serve Time (g_s), s	0.0	10.8	0.0	0.0	0.0	0.0	0.0	2.8
Cycle Queue Clear Time (g_c), s	0.0	10.8	0.0	0.0	0.0	0.0	0.0	2.8
Prot RT Sat Flow Rate (s_R), veh/h/ln	0.0	0.0	0.0	0.0	0.0	0.0	0.0	0.0
Prot RT Eff. Green (g_R), s	0.0	0.0	0.0	0.0	0.0	0.0	0.0	0.0
Proportion RT Outside Lane (P_R)	0.000	0.032	0.000	0.000	0.000	0.000	0.000	0.652
Lane Group Capacity (c), veh/h	0.0	1664.2	0.0	0.0	0.0	0.0	0.0	85.9
Volume-to-Capacity Ratio (X)	0.000	0.388	0.000	0.000	0.000	0.000	0.000	0.288
Available Capacity (c_a), veh/h	0.0	1664.2	0.0	0.0	0.0	0.0	0.0	259.9
Upstream Filter Factor (I)	0.000	1.000	0.000	0.000	0.000	0.000	0.000	1.000
Uniform Delay (d1), s/veh	0.0	1.6	0.0	0.0	0.0	0.0	0.0	91.0
Incremental Delay (d2), s/veh	0.0	0.7	0.0	0.0	0.0	0.0	0.0	1.8
Initial Queue Delay (d3), s/veh	0.0	0.0	0.0	0.0	0.0	0.0	0.0	0.0
Control Delay (d), s/veh	0.0	2.3	0.0	0.0	0.0	0.0	0.0	92.8
First-Term Queue (Q1), veh/ln	0.0	2.7	0.0	0.0	0.0	0.0	0.0	1.2
Second-Term Queue (Q2), veh/ln	0.0	0.3	0.0	0.0	0.0	0.0	0.0	0.0
Third-Term Queue (Q3), veh/ln	0.0	0.0	0.0	0.0	0.0	0.0	0.0	0.0
Percentile bk-of-que factor (f_B%)	0.000	1.000	0.000	1.000	0.000	0.000	0.000	1.000
Percentile Back of Queue (Q%), veh/ln	0.0	3.0	0.0	0.0	0.0	0.0	0.0	1.3
Percentile Storage Ratio (RQ%)	0.00	0.14	0.00	0.00	0.00	0.00	0.00	0.15
Initial Queue (Qb), veh	0.0	0.0	0.0	0.0	0.0	0.0	0.0	0.0
Final (Residual) Queue (Qe), veh	0.0	0.0	0.0	0.0	0.0	0.0	0.0	0.0
Saturated Delay (ds), s/veh	0.0	0.0	0.0	0.0	0.0	0.0	0.0	0.0
Saturated Queue (Qs), veh	0.0	0.0	0.0	0.0	0.0	0.0	0.0	0.0
Saturated Capacity (cs), veh/h	0.0	0.0	0.0	0.0	0.0	0.0	0.0	0.0
Initial Queue Clear Time (tc), h	0.0	0.0	0.0	0.0	0.0	0.0	0.0	0.0

Intersection Summary	
HCM Average Control Delay	5.9
HCM Level of Service	A

Lane Group	EBT	WBT	NET
Lane Group Flow (vph)	27	99	2130
v/c Ratio	0.14	0.52	0.50
Control Delay	43.4	54.1	3.9
Queue Delay	0.0	0.0	0.3
Total Delay	43.4	54.1	4.2
Queue Length 50th (ft)	18	67	141
Queue Length 95th (ft)	41	112	204
Internal Link Dist (ft)	164	208	477
Turn Bay Length (ft)			
Base Capacity (vph)	370	370	4249
Starvation Cap Reductn	0	0	1180
Spillback Cap Reductn	0	0	0
Storage Cap Reductn	0	0	0
Reduced v/c Ratio	0.07	0.27	0.69

Intersection Summary

Movement	EBL	EBT	EBR	WBL	WBT	WBR	NEL	NET	NER	SWL	SWT	SWR
Lane Configurations												
Volume (vph)	0	25	0	0	90	0	1	1923	15	0	0	0
Ideal Flow (vphpl)	1900	1900	1900	1900	1900	1900	1900	1900	1900	1900	1900	1900
Total Lost time (s)		5.0			5.0			5.0				
Lane Util. Factor		1.00			1.00			0.91				
Frt		1.00			1.00			1.00				
Flt Protected		1.00			1.00			1.00				
Satd. Flow (prot)		1863			1863			5079				
Flt Permitted		1.00			1.00			1.00				
Satd. Flow (perm)		1863			1863			5079				
Peak-hour factor, PHF	0.91	0.91	0.91	0.91	0.91	0.91	0.91	0.91	0.91	0.91	0.91	0.91
Adj. Flow (vph)	0	27	0	0	99	0	1	2113	16	0	0	0
RTOR Reduction (vph)	0	0	0	0	0	0	0	0	0	0	0	0
Lane Group Flow (vph)	0	27	0	0	99	0	0	2130	0	0	0	0
Turn Type	Perm	NA			NA		Perm	NA				
Protected Phases		4			8			2				
Permitted Phases	4						2					
Actuated Green, G (s)		9.5			9.5			87.7				
Effective Green, g (s)		9.5			9.5			87.7				
Actuated g/C Ratio		0.09			0.09			0.82				
Clearance Time (s)		5.0			5.0			5.0				
Vehicle Extension (s)		3.0			3.0			3.0				
Lane Grp Cap (vph)		165			165			4155				
v/s Ratio Prot		0.01			c0.05							
v/s Ratio Perm								0.42				
v/c Ratio		0.16			0.60			0.51				
Uniform Delay, d1		45.2			47.0			3.1				
Progression Factor		1.00			1.00			1.00				
Incremental Delay, d2		0.5			5.8			0.5				
Delay (s)		45.6			52.8			3.5				
Level of Service		D			D			A				
Approach Delay (s)		45.6			52.8			3.5			0.0	
Approach LOS		D			D			A			A	

Intersection Summary			
HCM Average Control Delay	6.2	HCM Level of Service	A
HCM Volume to Capacity ratio	0.52		
Actuated Cycle Length (s)	107.2	Sum of lost time (s)	10.0
Intersection Capacity Utilization	50.6%	ICU Level of Service	A
Analysis Period (min)	15		
c Critical Lane Group			

Movement	EBL	EBT	EBR	WBL	WBT	WBR	NEL	NET	NER	SWL	SWT	SWR
Lane Configurations												
Volume (vph)	0	25	0	0	90	0	1	1923	15	0	0	0
Movement Number	7	4	14	3	8	18	5	2	12	1	6	16
Initial Queue, veh	0	0	0	0	0	0	0	0	0	0	0	0
Ped-Bike Adj. Factor (A_pbT)	1.00		1.00	1.00		1.00	1.00		1.00	1.00		1.00
Parking, Bus Adj. Factors	1.00	1.00	1.00	1.00	1.00	1.00	1.00	1.00	1.00	1.00	1.00	1.00
Adj. Sat. Flow Rate, veh/h/ln	1900	1863	1900	1900	1863	1900	1863	1863	1863	1900	1900	1900
Lanes	0	1	0	0	1	0	0	3	0	0	0	0
Lane Assignment												
Capacity, veh/h	33	136	0	0	136	0	38	4142	32	0	0	0
Proportion Arriving On Green	0.00	0.07	0.00	0.00	0.07	0.00	0.82	0.82	0.82	0.00	0.00	0.00
Movement Delay, s/veh	0.0	42.6	0.0	0.0	50.8	0.0	4.6	3.9	3.9	0.0	0.0	0.0
Movement LOS		D			D		A	A	A			
Approach Volume, veh/h		27			99			2131			0	
Approach Delay, s/veh		42.6			50.8			4.2			0.0	
Approach LOS		D			D			A				

Timer:	1	2	3	4	5	6	7	8
Assigned Phase		2		4				8
Case No		8.0		8.0				8.0
Phase Duration (G+Y+Rc), s		84.00		12.00				12.00
Change Period (Y+Rc), s		5.00		5.00				5.00
Max. Allowable Headway (MAH), s		3.91		3.90				3.90
Maximum Green Setting (Gmax), s		79.00		21.00				21.00
Max. Queue Clearance Time (g_c+I1), s		81.00		3.33				6.99
Green Extension Time (g_e), s		0.00		0.29				0.26
Probability of Phase Call (p_c)		1.000		0.966				0.966
Probability of Max Out (p_x)		1.000		0.000				0.000

Left-Turn Movement Data				
Assigned Movement		5		7
Mvmt. Sat Flow, veh/h		2.62		0.00

Through Movement Data				
Assigned Movement		2		4				8
Mvmt. Sat Flow, veh/h		5030.77		1862.75				1862.75

Right-Turn Movement Data				
Assigned Movement		12		14				18
Mvmt. Sat Flow, veh/h		39.22		0.00				0.00

Left Lane Group Data								
Assigned Movement	0	5	0	7	0	0	0	0
Lane Assignment		L+T						
Lanes in Group	0	1	0	0	0	0	0	0
Group Volume (v), veh/h	0.0	709.4	0.0	0.0	0.0	0.0	0.0	0.0
Group Sat. Flow (s), veh/h/ln	0.0	1689.3	0.0	0.0	0.0	0.0	0.0	0.0
Queue Serve Time (g_s), s	0.0	0.0	0.0	0.0	0.0	0.0	0.0	0.0
Cycle Queue Clear Time (g_c), s	0.0	79.0	0.0	0.0	0.0	0.0	0.0	0.0

Perm LT Sat Flow Rate (s_l), veh/h/ln	0.0	800.0	0.0	0.0	0.0	0.0	0.0	0.0
Shared LT Sat Flow (s_sh), veh/h/ln	0.0	0.0	0.0	1862.7	0.0	0.0	0.0	0.0
Perm LT Eff. Green (g_p), s	0.0	79.0	0.0	0.0	0.0	0.0	0.0	0.0
Perm LT Serve Time (g_u), s	0.0	0.0	0.0	0.0	0.0	0.0	0.0	0.0
Perm LT Que Serve Time (g_ps), s	0.0	0.0	0.0	0.0	0.0	0.0	0.0	0.0
Time to First Blk (g_f), s	0.0	71.6	0.0	7.0	0.0	0.0	0.0	7.0
Serve Time pre Blk (g_fs), s	0.0	11.9	0.0	0.0	0.0	0.0	0.0	0.0
Proportion LT Inside Lane (P_L)	0.000	0.002	0.000	0.000	0.000	0.000	0.000	0.000
Lane Group Capacity (c), veh/h	0.0	1427.7	0.0	0.0	0.0	0.0	0.0	0.0
Volume-to-Capacity Ratio (X)	0.000	0.497	0.000	0.000	0.000	0.000	0.000	0.000
Available Capacity (c_a), veh/h	0.0	1427.7	0.0	0.0	0.0	0.0	0.0	0.0
Upstream Filter Factor (I)	0.000	1.000	0.000	0.000	0.000	0.000	0.000	0.000
Uniform Delay (d1), s/veh	0.0	3.4	0.0	0.0	0.0	0.0	0.0	0.0
Incremental Delay (d2), s/veh	0.0	1.2	0.0	0.0	0.0	0.0	0.0	0.0
Initial Queue Delay (d3), s/veh	0.0	0.0	0.0	0.0	0.0	0.0	0.0	0.0
Control Delay (d), s/veh	0.0	4.6	0.0	0.0	0.0	0.0	0.0	0.0
First-Term Queue (Q1), veh/ln	0.0	2.8	0.0	0.0	0.0	0.0	0.0	0.0
Second-Term Queue (Q2), veh/ln	0.0	0.5	0.0	0.0	0.0	0.0	0.0	0.0
Third-Term Queue (Q3), veh/ln	0.0	0.0	0.0	0.0	0.0	0.0	0.0	0.0
Percentile bk-of-que factor (f_B%)	0.000	1.000	0.000	1.000	0.000	0.000	0.000	0.000
Percentile Back of Queue (Q%), veh/ln	0.0	3.3	0.0	0.0	0.0	0.0	0.0	0.0
Percentile Storage Ratio (RQ%)	0.00	0.18	0.00	0.00	0.00	0.00	0.00	0.00
Initial Queue (Qb), veh	0.0	0.0	0.0	0.0	0.0	0.0	0.0	0.0
Final (Residual) Queue (Qe), veh	0.0	0.0	0.0	0.0	0.0	0.0	0.0	0.0
Saturated Delay (ds), s/veh	0.0	0.0	0.0	0.0	0.0	0.0	0.0	0.0
Saturated Queue (Qs), veh	0.0	0.0	0.0	0.0	0.0	0.0	0.0	0.0
Saturated Capacity (cs), veh/h	0.0	0.0	0.0	0.0	0.0	0.0	0.0	0.0
Initial Queue Clear Time (tc), h	0.0	0.0	0.0	0.0	0.0	0.0	0.0	0.0
Middle Lane Group Data								
Assigned Movement	0	2	0	4	0	0	0	8
Lane Assignment		T		T				T
Lanes in Group	0	1	0	1	0	0	0	1
Group Volume (v), veh/h	0.0	711.8	0.0	27.5	0.0	0.0	0.0	98.9
Group Sat. Flow (s), veh/h/ln	0.0	1695.1	0.0	1862.7	0.0	0.0	0.0	1862.7
Queue Serve Time (g_s), s	0.0	12.3	0.0	1.3	0.0	0.0	0.0	5.0
Cycle Queue Clear Time (g_c), s	0.0	12.3	0.0	1.3	0.0	0.0	0.0	5.0
Lane Group Capacity (c), veh/h	0.0	1394.9	0.0	135.8	0.0	0.0	0.0	135.8
Volume-to-Capacity Ratio (X)	0.000	0.510	0.000	0.202	0.000	0.000	0.000	0.728
Available Capacity (c_a), veh/h	0.0	1394.9	0.0	407.5	0.0	0.0	0.0	407.5
Upstream Filter Factor (I)	0.000	1.000	0.000	1.000	0.000	0.000	0.000	1.000
Uniform Delay (d1), s/veh	0.0	2.6	0.0	41.9	0.0	0.0	0.0	43.6
Incremental Delay (d2), s/veh	0.0	1.3	0.0	0.7	0.0	0.0	0.0	7.2
Initial Queue Delay (d3), s/veh	0.0	0.0	0.0	0.0	0.0	0.0	0.0	0.0
Control Delay (d), s/veh	0.0	3.9	0.0	42.6	0.0	0.0	0.0	50.8
First-Term Queue (Q1), veh/ln	0.0	2.3	0.0	0.6	0.0	0.0	0.0	2.3
Second-Term Queue (Q2), veh/ln	0.0	0.5	0.0	0.0	0.0	0.0	0.0	0.3
Third-Term Queue (Q3), veh/ln	0.0	0.0	0.0	0.0	0.0	0.0	0.0	0.0
Percentile bk-of-que factor (f_B%)	0.000	1.000	0.000	1.000	0.000	0.000	0.000	1.000
Percentile Back of Queue (Q%), veh/ln	0.0	2.8	0.0	0.6	0.0	0.0	0.0	2.6
Percentile Storage Ratio (RQ%)	0.00	0.15	0.00	0.07	0.00	0.00	0.00	0.29

Initial Queue (Qb), veh	0.0	0.0	0.0	0.0	0.0	0.0	0.0	0.0
Final (Residual) Queue (Qe), veh	0.0	0.0	0.0	0.0	0.0	0.0	0.0	0.0
Saturated Delay (ds), s/veh	0.0	0.0	0.0	0.0	0.0	0.0	0.0	0.0
Saturated Queue (Qs), veh	0.0	0.0	0.0	0.0	0.0	0.0	0.0	0.0
Saturated Capacity (cs), veh/h	0.0	0.0	0.0	0.0	0.0	0.0	0.0	0.0
Initial Queue Clear Time (tc), h	0.0	0.0	0.0	0.0	0.0	0.0	0.0	0.0
Right Lane Group Data								
Assigned Movement	0	12	0	14	0	0	0	18
Lane Assignment		T+R						
Lanes in Group	0	1	0	0	0	0	0	0
Group Volume (v), veh/h	0.0	709.5	0.0	0.0	0.0	0.0	0.0	0.0
Group Sat. Flow (s), veh/h/ln	0.0	1688.2	0.0	0.0	0.0	0.0	0.0	0.0
Queue Serve Time (g_s), s	0.0	12.3	0.0	0.0	0.0	0.0	0.0	0.0
Cycle Queue Clear Time (g_c), s	0.0	12.3	0.0	0.0	0.0	0.0	0.0	0.0
Prot RT Sat Flow Rate (s_R), veh/h/ln	0.0	0.0	0.0	0.0	0.0	0.0	0.0	0.0
Prot RT Eff. Green (g_R), s	0.0	0.0	0.0	0.0	0.0	0.0	0.0	0.0
Proportion RT Outside Lane (P_R)	0.000	0.023	0.000	0.000	0.000	0.000	0.000	0.000
Lane Group Capacity (c), veh/h	0.0	1389.2	0.0	0.0	0.0	0.0	0.0	0.0
Volume-to-Capacity Ratio (X)	0.000	0.511	0.000	0.000	0.000	0.000	0.000	0.000
Available Capacity (c_a), veh/h	0.0	1389.2	0.0	0.0	0.0	0.0	0.0	0.0
Upstream Filter Factor (I)	0.000	1.000	0.000	0.000	0.000	0.000	0.000	0.000
Uniform Delay (d1), s/veh	0.0	2.6	0.0	0.0	0.0	0.0	0.0	0.0
Incremental Delay (d2), s/veh	0.0	1.3	0.0	0.0	0.0	0.0	0.0	0.0
Initial Queue Delay (d3), s/veh	0.0	0.0	0.0	0.0	0.0	0.0	0.0	0.0
Control Delay (d), s/veh	0.0	3.9	0.0	0.0	0.0	0.0	0.0	0.0
First-Term Queue (Q1), veh/ln	0.0	2.2	0.0	0.0	0.0	0.0	0.0	0.0
Second-Term Queue (Q2), veh/ln	0.0	0.5	0.0	0.0	0.0	0.0	0.0	0.0
Third-Term Queue (Q3), veh/ln	0.0	0.0	0.0	0.0	0.0	0.0	0.0	0.0
Percentile bk-of-que factor (f_B%)	0.000	1.000	0.000	1.000	0.000	0.000	0.000	1.000
Percentile Back of Queue (Q%), veh/ln	0.0	2.8	0.0	0.0	0.0	0.0	0.0	0.0
Percentile Storage Ratio (RQ%)	0.00	0.15	0.00	0.00	0.00	0.00	0.00	0.00
Initial Queue (Qb), veh	0.0	0.0	0.0	0.0	0.0	0.0	0.0	0.0
Final (Residual) Queue (Qe), veh	0.0	0.0	0.0	0.0	0.0	0.0	0.0	0.0
Saturated Delay (ds), s/veh	0.0	0.0	0.0	0.0	0.0	0.0	0.0	0.0
Saturated Queue (Qs), veh	0.0	0.0	0.0	0.0	0.0	0.0	0.0	0.0
Saturated Capacity (cs), veh/h	0.0	0.0	0.0	0.0	0.0	0.0	0.0	0.0
Initial Queue Clear Time (tc), h	0.0	0.0	0.0	0.0	0.0	0.0	0.0	0.0
Intersection Summary								
HCM Average Control Delay		6.7						
HCM Level of Service		A						

Movement	EBL	EBR	NBL	NBT	SBT	SBR
Lane Configurations						
Volume (veh/h)	1	1	1	266	226	2
Sign Control	Stop			Free	Free	
Grade	0%			0%	0%	
Peak Hour Factor	0.92	0.92	0.92	0.92	0.92	0.92
Hourly flow rate (vph)	1	1	1	289	246	2
Pedestrians						
Lane Width (ft)						
Walking Speed (ft/s)						
Percent Blockage						
Right turn flare (veh)						
Median type				None	None	
Median storage veh)						
Upstream signal (ft)				296		
pX, platoon unblocked						
vC, conflicting volume	538	247	248			
vC1, stage 1 conf vol						
vC2, stage 2 conf vol						
vCu, unblocked vol	538	247	248			
tC, single (s)	6.4	6.2	4.1			
tC, 2 stage (s)						
tF (s)	3.5	3.3	2.2			
p0 queue free %	100	100	100			
cM capacity (veh/h)	504	792	1318			

Direction, Lane #	EB 1	NB 1	SB 1
Volume Total	2	290	248
Volume Left	1	1	0
Volume Right	1	0	2
cSH	616	1318	1700
Volume to Capacity	0.00	0.00	0.15
Queue Length 95th (ft)	0	0	0
Control Delay (s)	10.9	0.0	0.0
Lane LOS	B	A	
Approach Delay (s)	10.9	0.0	0.0
Approach LOS	B		

Intersection Summary			
Average Delay	0.1		
Intersection Capacity Utilization	24.8%	ICU Level of Service	A
Analysis Period (min)	15		

Movement	EBL	EBR	NBL	NBT	SBT	SBR
Lane Configurations						
Volume (veh/h)	3	0	0	271	229	1
Sign Control	Stop			Free	Free	
Grade	0%			0%	0%	
Peak Hour Factor	0.92	0.92	0.92	0.92	0.92	0.92
Hourly flow rate (vph)	3	0	0	295	249	1
Pedestrians						
Lane Width (ft)						
Walking Speed (ft/s)						
Percent Blockage						
Right turn flare (veh)						
Median type				None	None	
Median storage veh)						
Upstream signal (ft)				581		
pX, platoon unblocked						
vC, conflicting volume	544	249	250			
vC1, stage 1 conf vol						
vC2, stage 2 conf vol						
vCu, unblocked vol	544	249	250			
tC, single (s)	6.4	6.2	4.1			
tC, 2 stage (s)						
tF (s)	3.5	3.3	2.2			
p0 queue free %	99	100	100			
cM capacity (veh/h)	500	789	1316			

Direction, Lane #	EB 1	NB 1	SB 1
Volume Total	3	295	250
Volume Left	3	0	0
Volume Right	0	0	1
cSH	500	1316	1700
Volume to Capacity	0.01	0.00	0.15
Queue Length 95th (ft)	0	0	0
Control Delay (s)	12.2	0.0	0.0
Lane LOS	B		
Approach Delay (s)	12.2	0.0	0.0
Approach LOS	B		

Intersection Summary			
Average Delay	0.1		
Intersection Capacity Utilization	24.3%	ICU Level of Service	A
Analysis Period (min)	15		

Movement	EBL	EBR	NBL	NBT	SBT	SBR
Lane Configurations						
Volume (veh/h)	9	18	29	237	191	2
Sign Control	Stop			Free	Free	
Grade	0%			0%	0%	
Peak Hour Factor	0.92	0.92	0.92	0.92	0.92	0.92
Hourly flow rate (vph)	10	20	32	258	208	2
Pedestrians						
Lane Width (ft)						
Walking Speed (ft/s)						
Percent Blockage						
Right turn flare (veh)						
Median type				None	None	
Median storage veh)						
Upstream signal (ft)				866		
pX, platoon unblocked						
vC, conflicting volume	529	209	210			
vC1, stage 1 conf vol						
vC2, stage 2 conf vol						
vCu, unblocked vol	529	209	210			
tC, single (s)	6.4	6.2	4.1			
tC, 2 stage (s)						
tF (s)	3.5	3.3	2.2			
p0 queue free %	98	98	98			
cM capacity (veh/h)	498	832	1361			

Direction, Lane #	EB 1	NB 1	SB 1
Volume Total	29	289	210
Volume Left	10	32	0
Volume Right	20	0	2
cSH	680	1361	1700
Volume to Capacity	0.04	0.02	0.12
Queue Length 95th (ft)	3	2	0
Control Delay (s)	10.5	1.0	0.0
Lane LOS	B	A	
Approach Delay (s)	10.5	1.0	0.0
Approach LOS	B		

Intersection Summary			
Average Delay	1.1		
Intersection Capacity Utilization	37.6%	ICU Level of Service	A
Analysis Period (min)	15		

Movement	EBL	EBR	NBL	NBT	SBT	SBR
Lane Configurations						
Volume (veh/h)	27	29	38	184	127	32
Sign Control	Stop			Free	Free	
Grade	0%			0%	0%	
Peak Hour Factor	0.92	0.92	0.92	0.92	0.92	0.92
Hourly flow rate (vph)	29	32	41	200	138	35
Pedestrians						
Lane Width (ft)						
Walking Speed (ft/s)						
Percent Blockage						
Right turn flare (veh)						
Median type				None	None	
Median storage veh)						
Upstream signal (ft)						
pX, platoon unblocked						
vC, conflicting volume	438	155	173			
vC1, stage 1 conf vol						
vC2, stage 2 conf vol						
vCu, unblocked vol	438	155	173			
tC, single (s)	6.4	6.2	4.1			
tC, 2 stage (s)						
tF (s)	3.5	3.3	2.2			
p0 queue free %	95	96	97			
cM capacity (veh/h)	559	890	1404			

Direction, Lane #	EB 1	NB 1	SB 1
Volume Total	61	241	173
Volume Left	29	41	0
Volume Right	32	0	35
cSH	692	1404	1700
Volume to Capacity	0.09	0.03	0.10
Queue Length 95th (ft)	7	2	0
Control Delay (s)	10.7	1.5	0.0
Lane LOS	B	A	
Approach Delay (s)	10.7	1.5	0.0
Approach LOS	B		

Intersection Summary			
Average Delay	2.1		
Intersection Capacity Utilization	33.7%	ICU Level of Service	A
Analysis Period (min)	15		

Movement	EBL	EBT	EBR	WBL	WBT	WBR	NBL	NBT	NBR	SBL	SBT	SBR
Lane Configurations												
Sign Control		Stop			Stop			Stop			Stop	
Volume (vph)	3	103	65	39	142	1	30	183	23	2	1	4
Peak Hour Factor	0.92	0.92	0.92	0.92	0.92	0.92	0.92	0.92	0.92	0.92	0.92	0.92
Hourly flow rate (vph)	3	112	71	42	154	1	33	199	25	2	1	4

Direction, Lane #	EB 1	WB 1	NB 1	SB 1
Volume Total (vph)	186	198	257	8
Volume Left (vph)	3	42	33	2
Volume Right (vph)	71	1	25	4
Hadj (s)	-0.19	0.07	0.00	-0.25
Departure Headway (s)	4.6	4.9	4.8	5.0
Degree Utilization, x	0.24	0.27	0.35	0.01
Capacity (veh/h)	721	692	701	639
Control Delay (s)	9.1	9.7	10.4	8.0
Approach Delay (s)	9.1	9.7	10.4	8.0
Approach LOS	A	A	B	A

Intersection Summary			
Delay	9.8		
HCM Level of Service	A		
Intersection Capacity Utilization	43.3%	ICU Level of Service	A
Analysis Period (min)	15		

HCM Unsignalized Intersection Capacity Analysis
1: SW 97th Ave. & SW 174th St.

2/18/2015

Movement	EBL	EBT	EBR	WBL	WBT	WBR	NBL	NBT	NBR	SBL	SBT	SBR
Lane Configurations												
Sign Control		Stop			Stop			Stop			Stop	
Volume (vph)	4	135	26	31	100	0	21	14	11	23	106	1
Peak Hour Factor	0.84	0.84	0.84	0.84	0.84	0.84	0.84	0.84	0.84	0.84	0.84	0.84
Hourly flow rate (vph)	5	161	31	37	119	0	25	17	13	27	126	1

Direction, Lane #	EB 1	WB 1	NB 1	SB 1
Volume Total (vph)	196	156	55	155
Volume Left (vph)	5	37	25	27
Volume Right (vph)	31	0	13	1
Hadj (s)	-0.06	0.08	-0.02	0.06
Departure Headway (s)	4.6	4.8	4.9	4.9
Degree Utilization, x	0.25	0.21	0.08	0.21
Capacity (veh/h)	740	712	662	683
Control Delay (s)	9.1	9.0	8.4	9.2
Approach Delay (s)	9.1	9.0	8.4	9.2
Approach LOS	A	A	A	A

Intersection Summary			
Delay	9.0		
HCM Level of Service	A		
Intersection Capacity Utilization	33.1%	ICU Level of Service	A
Analysis Period (min)	15		

Lane Group	EBL	EBR	NBL	NBT	NBR	SBT	NET
Lane Group Flow (vph)	1	88	4	13	365	136	4104
v/c Ratio	0.02	0.99	0.06	0.05	0.23	0.56	0.98
Control Delay	104.0	191.5	97.0	95.5	0.3	107.8	26.4
Queue Delay	0.0	0.0	0.0	0.0	0.0	0.0	19.6
Total Delay	104.0	191.5	97.0	95.5	0.3	107.8	46.0
Queue Length 50th (ft)	1	74	6	9	0	102	1735
Queue Length 95th (ft)	10	#139	20	22	0	137	1231
Internal Link Dist (ft)	257			1041		665	1300
Turn Bay Length (ft)					200		
Base Capacity (vph)	56	89	71	257	1583	244	4207
Starvation Cap Reductn	0	0	0	0	0	0	283
Spillback Cap Reductn	0	0	0	0	0	0	0
Storage Cap Reductn	0	0	0	0	0	0	0
Reduced v/c Ratio	0.02	0.99	0.06	0.05	0.23	0.56	1.05

Intersection Summary

95th percentile volume exceeds capacity, queue may be longer.
Queue shown is maximum after two cycles.

Movement	EBL	EBR	NBL	NBT	NBR	SBL	SBT	NEL2	NEL	NET	NER
Lane Configurations											
Volume (vph)	1	74	3	11	307	3	111	1	2	3438	7
Ideal Flow (vphpl)	1900	1900	1900	1900	1900	1900	1900	1900	1900	1900	1900
Total Lost time (s)	5.0	5.0	5.0	5.0	4.0		5.0			5.0	
Lane Util. Factor	1.00	0.88	1.00	0.95	1.00		0.95			0.91	
Frt	1.00	0.85	1.00	1.00	0.85		1.00			1.00	
Flt Protected	0.95	1.00	0.95	1.00	1.00		1.00			1.00	
Satd. Flow (prot)	1770	2787	1770	3539	1583		3534			5084	
Flt Permitted	0.95	1.00	0.52	1.00	1.00		0.95			1.00	
Satd. Flow (perm)	1770	2787	973	3539	1583		3357			5084	
Peak-hour factor, PHF	0.84	0.84	0.84	0.84	0.84	0.84	0.84	0.84	0.84	0.84	0.84
Adj. Flow (vph)	1	88	4	13	365	4	132	1	2	4093	8
RTOR Reduction (vph)	0	0	0	0	0	0	0	0	0	0	0
Lane Group Flow (vph)	1	88	4	13	365	0	136	0	0	4104	0
Turn Type	NA	Perm	Perm	NA	Free	Perm	NA	Perm	Perm	NA	
Protected Phases	3			4			8			6	
Permitted Phases		3	4		Free	8		6	6		
Actuated Green, G (s)	7.0	7.0	16.0	16.0	220.0		16.0			182.0	
Effective Green, g (s)	7.0	7.0	16.0	16.0	220.0		16.0			182.0	
Actuated g/C Ratio	0.03	0.03	0.07	0.07	1.00		0.07			0.83	
Clearance Time (s)	5.0	5.0	5.0	5.0			5.0			5.0	
Vehicle Extension (s)	3.0	3.0	3.0	3.0			3.0			3.0	
Lane Grp Cap (vph)	56	89	71	257	1583		244			4206	
v/s Ratio Prot	0.00			0.00							
v/s Ratio Perm		c0.03	0.00		0.23		c0.04			0.81	
v/c Ratio	0.02	0.99	0.06	0.05	0.23		0.56			0.98	
Uniform Delay, d1	103.2	106.5	95.0	94.9	0.0		98.6			17.0	
Progression Factor	1.00	1.00	1.00	1.00	1.00		1.00			1.00	
Incremental Delay, d2	0.1	90.8	1.5	0.4	0.3		8.9			9.3	
Delay (s)	103.3	197.3	96.5	95.3	0.3		107.5			26.3	
Level of Service	F	F	F	F	A		F			C	
Approach Delay (s)	196.2			4.6			107.5			26.3	
Approach LOS	F			A			F			C	

Intersection Summary			
HCM Average Control Delay	30.1	HCM Level of Service	C
HCM Volume to Capacity ratio	0.94		
Actuated Cycle Length (s)	220.0	Sum of lost time (s)	15.0
Intersection Capacity Utilization	90.8%	ICU Level of Service	E
Analysis Period (min)	15		
c Critical Lane Group			

Movement	EBL	EBR	NBL	NBT	SBT	SBR
Lane Configurations						
Volume (veh/h)	41	34	36	339	97	43
Sign Control	Stop			Free	Free	
Grade	0%			0%	0%	
Peak Hour Factor	0.90	0.90	0.90	0.90	0.90	0.90
Hourly flow rate (vph)	46	38	40	377	108	48
Pedestrians						
Lane Width (ft)						
Walking Speed (ft/s)						
Percent Blockage						
Right turn flare (veh)						
Median type				None	None	
Median storage veh)						
Upstream signal (ft)					1121	
pX, platoon unblocked	0.97	0.97	0.97			
vC, conflicting volume	588	132	156			
vC1, stage 1 conf vol						
vC2, stage 2 conf vol						
vCu, unblocked vol	563	93	118			
tC, single (s)	6.4	6.2	4.1			
tC, 2 stage (s)						
tF (s)	3.5	3.3	2.2			
p0 queue free %	90	96	97			
cM capacity (veh/h)	461	937	1430			

Direction, Lane #	EB 1	NB 1	SB 1
Volume Total	83	417	156
Volume Left	46	40	0
Volume Right	38	0	48
cSH	599	1430	1700
Volume to Capacity	0.14	0.03	0.09
Queue Length 95th (ft)	12	2	0
Control Delay (s)	12.0	1.0	0.0
Lane LOS	B	A	
Approach Delay (s)	12.0	1.0	0.0
Approach LOS	B		

Intersection Summary			
Average Delay	2.1		
Intersection Capacity Utilization	41.9%	ICU Level of Service	A
Analysis Period (min)	15		

Movement	WBL	WBR	NBT	NBR	SBL	SBT
Lane Configurations						
Volume (veh/h)	64	48	328	35	23	87
Sign Control	Stop		Free			Free
Grade	0%		0%			0%
Peak Hour Factor	0.89	0.89	0.89	0.89	0.89	0.89
Hourly flow rate (vph)	72	54	369	39	26	98
Pedestrians						
Lane Width (ft)						
Walking Speed (ft/s)						
Percent Blockage						
Right turn flare (veh)						
Median type			None			None
Median storage veh)						
Upstream signal (ft)						
pX, platoon unblocked						
vC, conflicting volume	538	388			408	
vC1, stage 1 conf vol						
vC2, stage 2 conf vol						
vCu, unblocked vol	538	388			408	
tC, single (s)	6.4	6.2			4.1	
tC, 2 stage (s)						
tF (s)	3.5	3.3			2.2	
p0 queue free %	85	92			98	
cM capacity (veh/h)	493	660			1151	

Direction, Lane #	WB 1	NB 1	SB 1
Volume Total	126	408	124
Volume Left	72	0	26
Volume Right	54	39	0
cSH	553	1700	1151
Volume to Capacity	0.23	0.24	0.02
Queue Length 95th (ft)	22	0	2
Control Delay (s)	13.4	0.0	1.9
Lane LOS	B		A
Approach Delay (s)	13.4	0.0	1.9
Approach LOS	B		

Intersection Summary			
Average Delay	2.9		
Intersection Capacity Utilization	37.6%	ICU Level of Service	A
Analysis Period (min)	15		

Movement	EBL	EBR	NBL	NBT	SBT	SBR
Lane Configurations						
Volume (veh/h)	22	25	17	365	110	40
Sign Control	Stop			Free	Free	
Grade	0%			0%	0%	
Peak Hour Factor	0.95	0.95	0.95	0.95	0.95	0.95
Hourly flow rate (vph)	23	26	18	384	116	42
Pedestrians						
Lane Width (ft)						
Walking Speed (ft/s)						
Percent Blockage						
Right turn flare (veh)						
Median type				None	None	
Median storage veh)						
Upstream signal (ft)				1230		
pX, platoon unblocked						
vC, conflicting volume	557	137	158			
vC1, stage 1 conf vol						
vC2, stage 2 conf vol						
vCu, unblocked vol	557	137	158			
tC, single (s)	6.4	6.2	4.1			
tC, 2 stage (s)						
tF (s)	3.5	3.3	2.2			
p0 queue free %	95	97	99			
cM capacity (veh/h)	485	912	1422			

Direction, Lane #	EB 1	NB 1	SB 1
Volume Total	49	402	158
Volume Left	23	18	0
Volume Right	26	0	42
cSH	646	1422	1700
Volume to Capacity	0.08	0.01	0.09
Queue Length 95th (ft)	6	1	0
Control Delay (s)	11.0	0.5	0.0
Lane LOS	B	A	
Approach Delay (s)	11.0	0.5	0.0
Approach LOS	B		

Intersection Summary			
Average Delay	1.2		
Intersection Capacity Utilization	41.7%	ICU Level of Service	A
Analysis Period (min)	15		

Movement	EBL	EBT	EBR	WBL	WBT	WBR	NBL	NBT	NBR	SBL	SBT	SBR
Lane Configurations												
Volume (veh/h)	41	11	15	42	22	16	16	328	12	4	94	33
Sign Control		Stop			Stop			Free			Free	
Grade		0%			0%			0%			0%	
Peak Hour Factor	0.93	0.93	0.93	0.93	0.93	0.93	0.93	0.93	0.93	0.93	0.93	0.93
Hourly flow rate (vph)	44	12	16	45	24	17	17	353	13	4	101	35
Pedestrians												
Lane Width (ft)												
Walking Speed (ft/s)												
Percent Blockage												
Right turn flare (veh)												
Median type								None			None	
Median storage veh)												
Upstream signal (ft)								904				
pX, platoon unblocked	0.92	0.92		0.92	0.92	0.92				0.92		
vC, conflicting volume	550	527	119	543	539	359	137			366		
vC1, stage 1 conf vol												
vC2, stage 2 conf vol												
vCu, unblocked vol	467	442	119	459	454	259	137			266		
tC, single (s)	7.1	6.5	6.2	7.1	6.5	6.2	4.1			4.1		
tC, 2 stage (s)												
tF (s)	3.5	4.0	3.3	3.5	4.0	3.3	2.2			2.2		
p0 queue free %	90	97	98	90	95	98	99			100		
cM capacity (veh/h)	431	461	933	448	454	717	1447			1193		

Direction, Lane #	EB 1	WB 1	NB 1	SB 1
Volume Total	72	86	383	141
Volume Left	44	45	17	4
Volume Right	16	17	13	35
cSH	496	487	1447	1193
Volume to Capacity	0.15	0.18	0.01	0.00
Queue Length 95th (ft)	13	16	1	0
Control Delay (s)	13.5	14.0	0.4	0.3
Lane LOS	B	B	A	A
Approach Delay (s)	13.5	14.0	0.4	0.3
Approach LOS	B	B		

Intersection Summary			
Average Delay	3.5		
Intersection Capacity Utilization	36.7%	ICU Level of Service	A
Analysis Period (min)	15		

Movement	EBL	EBT	EBR	WBL	WBT	WBR	NBL	NBT	NBR	SBL	SBT	SBR
Lane Configurations												
Volume (veh/h)	16	12	4	15	4	1	4	339	14	0	138	10
Sign Control		Stop			Stop			Free			Free	
Grade		0%			0%			0%			0%	
Peak Hour Factor	0.91	0.91	0.91	0.91	0.91	0.91	0.91	0.91	0.91	0.91	0.91	0.91
Hourly flow rate (vph)	18	13	4	16	4	1	4	373	15	0	152	11
Pedestrians												
Lane Width (ft)												
Walking Speed (ft/s)												
Percent Blockage												
Right turn flare (veh)												
Median type								None			None	
Median storage veh)												
Upstream signal (ft)								601				
pX, platoon unblocked	0.87	0.87		0.87	0.87	0.87				0.87		
vC, conflicting volume	549	554	157	557	552	380	163			388		
vC1, stage 1 conf vol												
vC2, stage 2 conf vol												
vCu, unblocked vol	406	411	157	415	409	212	163			221		
tC, single (s)	7.1	6.5	6.2	7.1	6.5	6.2	4.1			4.1		
tC, 2 stage (s)												
tF (s)	3.5	4.0	3.3	3.5	4.0	3.3	2.2			2.2		
p0 queue free %	96	97	100	96	99	100	100			100		
cM capacity (veh/h)	477	460	888	462	461	720	1416			1172		

Direction, Lane #	EB 1	WB 1	NB 1	SB 1
Volume Total	35	22	392	163
Volume Left	18	16	4	0
Volume Right	4	1	15	11
cSH	499	470	1416	1172
Volume to Capacity	0.07	0.05	0.00	0.00
Queue Length 95th (ft)	6	4	0	0
Control Delay (s)	12.8	13.0	0.1	0.0
Lane LOS	B	B	A	
Approach Delay (s)	12.8	13.0	0.1	0.0
Approach LOS	B	B		

Intersection Summary			
Average Delay	1.3		
Intersection Capacity Utilization	31.9%	ICU Level of Service	A
Analysis Period (min)	15		

Movement	EBL	EBT	EBR	WBL	WBT	WBR	NBL	NBT	NBR	SBL	SBT	SBR
Lane Configurations												
Volume (veh/h)	17	9	40	7	1	1	21	330	7	1	131	29
Sign Control		Stop			Stop			Free			Free	
Grade		0%			0%			0%			0%	
Peak Hour Factor	0.94	0.94	0.94	0.94	0.94	0.94	0.94	0.94	0.94	0.94	0.94	0.94
Hourly flow rate (vph)	18	10	43	7	1	1	22	351	7	1	139	31
Pedestrians												
Lane Width (ft)												
Walking Speed (ft/s)												
Percent Blockage												
Right turn flare (veh)												
Median type								None			None	
Median storage veh)												
Upstream signal (ft)								300				
pX, platoon unblocked	0.82	0.82		0.82	0.82	0.82				0.82		
vC, conflicting volume	558	560	155	604	572	355	170			359		
vC1, stage 1 conf vol												
vC2, stage 2 conf vol												
vCu, unblocked vol	357	360	155	413	374	111	170			115		
tC, single (s)	7.1	6.5	6.2	7.1	6.5	6.2	4.1			4.1		
tC, 2 stage (s)												
tF (s)	3.5	4.0	3.3	3.5	4.0	3.3	2.2			2.2		
p0 queue free %	96	98	95	98	100	100	98			100		
cM capacity (veh/h)	485	460	891	419	451	777	1407			1215		

Direction, Lane #	EB 1	WB 1	NB 1	SB 1
Volume Total	70	10	381	171
Volume Left	18	7	22	1
Volume Right	43	1	7	31
cSH	663	446	1407	1215
Volume to Capacity	0.11	0.02	0.02	0.00
Queue Length 95th (ft)	9	2	1	0
Control Delay (s)	11.1	13.3	0.6	0.1
Lane LOS	B	B	A	A
Approach Delay (s)	11.1	13.3	0.6	0.1
Approach LOS	B	B		

Intersection Summary			
Average Delay	1.8		
Intersection Capacity Utilization	41.4%	ICU Level of Service	A
Analysis Period (min)	15		

Lane Group	EBL	EBT	EBR	WBL	WBT	NBL	NBT	SBL	SBT
Lane Group Flow (vph)	83	477	117	152	613	243	632	22	144
v/c Ratio	0.18	0.45	0.27	0.30	0.59	0.44	0.69	0.05	0.17
Control Delay	20.8	29.0	10.8	28.0	43.9	28.5	38.5	28.3	37.1
Queue Delay	0.0	0.0	0.0	0.0	0.0	0.0	0.0	0.0	0.0
Total Delay	20.8	29.0	10.8	28.0	43.9	28.5	38.5	28.3	37.1
Queue Length 50th (ft)	36	120	3	83	239	133	162	12	44
Queue Length 95th (ft)	85	210	60	167	388	242	307	35	92
Internal Link Dist (ft)		1441			531		229		156
Turn Bay Length (ft)	130			95		155		130	
Base Capacity (vph)	555	1901	785	525	1875	703	1842	528	1849
Starvation Cap Reductn	0	0	0	0	51	0	0	0	0
Spillback Cap Reductn	0	0	0	0	0	0	0	0	0
Storage Cap Reductn	0	0	0	0	0	0	0	0	0
Reduced v/c Ratio	0.15	0.25	0.15	0.29	0.34	0.35	0.34	0.04	0.08

Intersection Summary

Movement	EBL	EBT	EBR	WBL	WBT	WBR	NBL	NBT	NBR	SBL	SBT	SBR
Lane Configurations												
Volume (vph)	79	453	111	144	523	59	231	318	282	21	109	28
Ideal Flow (vphpl)	1900	1900	1900	1900	1900	1900	1900	1900	1900	1900	1900	1900
Total Lost time (s)	3.0	3.0	5.0	3.0	3.0		3.0	3.0		3.0	3.0	
Lane Util. Factor	1.00	0.95	1.00	1.00	0.95		1.00	0.95		1.00	0.95	
Frt	1.00	1.00	0.85	1.00	0.98		1.00	0.93		1.00	0.97	
Flt Protected	0.95	1.00	1.00	0.95	1.00		0.95	1.00		0.95	1.00	
Satd. Flow (prot)	1770	3539	1583	1770	3486		1770	3290		1770	3432	
Flt Permitted	0.28	1.00	1.00	0.48	1.00		0.66	1.00		0.41	1.00	
Satd. Flow (perm)	526	3539	1583	893	3486		1231	3290		767	3432	
Peak-hour factor, PHF	0.95	0.95	0.95	0.95	0.95	0.95	0.95	0.95	0.95	0.95	0.95	0.95
Adj. Flow (vph)	83	477	117	152	551	62	243	335	297	22	115	29
RTOR Reduction (vph)	0	0	88	0	4	0	0	80	0	0	11	0
Lane Group Flow (vph)	83	477	29	152	609	0	243	552	0	22	133	0
Turn Type	custom	NA	custom	custom	NA		custom	NA		custom	NA	
Protected Phases	1 2	2 4		1 3	3 4		5 6	6 8		5 7	7 8	
Permitted Phases	4		4	4			8			8		
Actuated Green, G (s)	54.9	37.6	28.9	51.5	37.2		47.5	31.7		44.8	32.0	
Effective Green, g (s)	54.9	37.6	28.9	51.5	37.2		47.5	31.7		44.8	32.0	
Actuated g/C Ratio	0.41	0.28	0.22	0.39	0.28		0.36	0.24		0.34	0.24	
Clearance Time (s)			5.0									
Vehicle Extension (s)			3.0									
Lane Grp Cap (vph)	463	1006	346	497	980		528	788		399	830	
v/s Ratio Prot	0.04	c0.13		c0.05	c0.17		c0.07	c0.17		0.01	c0.04	
v/s Ratio Perm	0.04		0.02	0.07			0.09			0.01		
v/c Ratio	0.18	0.47	0.08	0.31	0.62		0.46	0.70		0.06	0.16	
Uniform Delay, d1	24.1	39.2	41.2	27.0	41.4		31.5	46.0		29.3	39.5	
Progression Factor	1.00	1.00	1.00	1.00	1.00		1.00	1.00		1.00	1.00	
Incremental Delay, d2	0.2	0.4	0.1	0.4	1.2		0.6	2.8		0.1	0.1	
Delay (s)	24.3	39.5	41.3	27.3	42.6		32.1	48.8		29.4	39.6	
Level of Service	C	D	D	C	D		C	D		C	D	
Approach Delay (s)		38.0			39.6			44.2			38.3	
Approach LOS		D			D			D			D	

Intersection Summary			
HCM Average Control Delay	40.7	HCM Level of Service	D
HCM Volume to Capacity ratio	0.54		
Actuated Cycle Length (s)	132.3	Sum of lost time (s)	18.0
Intersection Capacity Utilization	56.1%	ICU Level of Service	B
Analysis Period (min)	15		
c Critical Lane Group			

Lane Group	EBL	EBT	WBT	SBL
Lane Group Flow (vph)	362	630	834	120
v/c Ratio	0.97	0.27	0.36	0.28
Control Delay	54.8	6.7	7.2	36.5
Queue Delay	0.6	0.0	0.0	0.0
Total Delay	55.4	6.7	7.2	36.5
Queue Length 50th (ft)	186	75	106	34
Queue Length 95th (ft)	329	86	118	181
Internal Link Dist (ft)		531	201	216
Turn Bay Length (ft)	75			
Base Capacity (vph)	553	3433	3406	435
Starvation Cap Reductn	37	953	0	0
Spillback Cap Reductn	0	0	0	0
Storage Cap Reductn	0	0	0	0
Reduced v/c Ratio	0.70	0.25	0.24	0.28

Intersection Summary

Movement	EBL	EBT	WBT	WBR	SBL	SBR
Lane Configurations						
Volume (vph)	319	554	695	39	30	76
Ideal Flow (vphpl)	1900	1900	1900	1900	1900	1900
Total Lost time (s)	5.0	5.0	5.0		5.0	
Lane Util. Factor	1.00	0.95	0.95		1.00	
Frt	1.00	1.00	0.99		0.90	
Flt Protected	0.95	1.00	1.00		0.99	
Satd. Flow (prot)	1770	3539	3511		1659	
Flt Permitted	0.31	1.00	1.00		0.99	
Satd. Flow (perm)	570	3539	3511		1659	
Peak-hour factor, PHF	0.88	0.88	0.88	0.88	0.88	0.88
Adj. Flow (vph)	362	630	790	44	34	86
RTOR Reduction (vph)	0	0	4	0	35	0
Lane Group Flow (vph)	362	630	830	0	85	0
Turn Type	Perm	NA	NA		NA	
Protected Phases		4	8		6	
Permitted Phases	4					
Actuated Green, G (s)	74.1	74.1	74.1		27.3	
Effective Green, g (s)	74.1	74.1	74.1		27.3	
Actuated g/C Ratio	0.67	0.67	0.67		0.25	
Clearance Time (s)	5.0	5.0	5.0		5.0	
Vehicle Extension (s)	3.0	3.0	3.0		3.0	
Lane Grp Cap (vph)	379	2354	2335		407	
v/s Ratio Prot		0.18	0.24		c0.05	
v/s Ratio Perm	c0.64					
v/c Ratio	0.96	0.27	0.36		0.21	
Uniform Delay, d1	17.1	7.6	8.2		33.5	
Progression Factor	1.00	1.00	1.00		1.00	
Incremental Delay, d2	34.4	0.1	0.1		1.2	
Delay (s)	51.5	7.7	8.3		34.6	
Level of Service	D	A	A		C	
Approach Delay (s)		23.7	8.3		34.6	
Approach LOS		C	A		C	

Intersection Summary			
HCM Average Control Delay	17.7	HCM Level of Service	B
HCM Volume to Capacity ratio	0.75		
Actuated Cycle Length (s)	111.4	Sum of lost time (s)	10.0
Intersection Capacity Utilization	57.0%	ICU Level of Service	B
Analysis Period (min)	15		
c Critical Lane Group			

Queues
11: US-1 & SW 184th St.

2/18/2015

Lane Group	EBL	EBT	EBR	WBL	WBT	WBR	NBL	NBT	NBR	SBL	SBT	SBR
Lane Group Flow (vph)	499	656	5	220	665	8	68	2348	65	133	1662	194
v/c Ratio	0.89	0.68	0.01	0.79	0.90	0.02	0.41	0.91	0.06	0.80	0.61	0.09
Control Delay	80.2	60.2	23.2	58.0	78.4	29.3	20.0	40.6	3.5	63.3	25.4	1.0
Queue Delay	0.0	0.0	0.0	0.0	0.0	0.0	0.0	0.0	0.0	0.0	0.0	0.0
Total Delay	80.2	60.2	23.2	58.0	78.4	29.3	20.0	40.6	3.5	63.3	25.4	1.0
Queue Length 50th (ft)	248	222	0	161	237	2	27	765	5	77	414	1
Queue Length 95th (ft)	291	249	10	218	265	16	45	737	20	#162	418	10
Internal Link Dist (ft)		484			394			469			768	
Turn Bay Length (ft)	200		200	286		200	160		200	130		200
Base Capacity (vph)	578	972	433	298	754	394	170	2572	1072	171	2733	2110
Starvation Cap Reductn	0	0	0	0	0	0	0	0	0	0	0	0
Spillback Cap Reductn	0	0	0	0	0	0	0	0	0	0	0	0
Storage Cap Reductn	0	0	0	0	0	0	0	0	0	0	0	0
Reduced v/c Ratio	0.86	0.67	0.01	0.74	0.88	0.02	0.40	0.91	0.06	0.78	0.61	0.09

Intersection Summary

95th percentile volume exceeds capacity, queue may be longer.
Queue shown is maximum after two cycles.

Movement	EBL	EBT	EBR	WBL	WBT	WBR	NBL	NBT	NBR	SBL	SBT	SBR
Lane Configurations												
Volume (vph)	419	551	4	185	559	7	57	1972	55	112	1396	163
Ideal Flow (vphpl)	1900	1900	1900	1900	1900	1900	1900	1900	1900	1900	1900	1900
Total Lost time (s)	5.0	5.0	3.0	5.0	5.0	3.0	3.0	5.0	5.0	3.0	5.0	5.0
Lane Util. Factor	0.97	0.91	1.00	1.00	0.91	1.00	1.00	0.91	1.00	1.00	0.91	0.88
Frt	1.00	1.00	0.85	1.00	1.00	0.85	1.00	1.00	0.85	1.00	1.00	0.85
Flt Protected	0.95	1.00	1.00	0.95	1.00	1.00	0.95	1.00	1.00	0.95	1.00	1.00
Satd. Flow (prot)	3433	5085	1583	1770	5085	1583	1770	5085	1583	1770	5085	2787
Flt Permitted	0.95	1.00	1.00	0.26	1.00	1.00	0.09	1.00	1.00	0.05	1.00	1.00
Satd. Flow (perm)	3433	5085	1583	492	5085	1583	166	5085	1583	95	5085	2787
Peak-hour factor, PHF	0.84	0.84	0.84	0.84	0.84	0.84	0.84	0.84	0.84	0.84	0.84	0.84
Adj. Flow (vph)	499	656	5	220	665	8	68	2348	65	133	1662	194
RTOR Reduction (vph)	0	0	4	0	0	4	0	0	18	0	0	57
Lane Group Flow (vph)	499	656	1	220	665	4	68	2348	47	133	1662	137
Turn Type	Prot	NA	pm+ov	pm+pt	NA	pm+ov	pm+pt	NA	pm+ov	pm+pt	NA	pm+ov
Protected Phases	7	4	5	3	8	1	5	2	3	1	6	7
Permitted Phases			4	8		8	2		2	6		6
Actuated Green, G (s)	24.1	28.2	33.7	39.1	21.6	31.2	81.2	75.7	93.2	88.3	79.8	103.9
Effective Green, g (s)	24.1	28.2	33.7	39.1	21.6	31.2	81.2	75.7	93.2	88.3	79.8	103.9
Actuated g/C Ratio	0.16	0.19	0.23	0.26	0.14	0.21	0.54	0.51	0.63	0.59	0.54	0.70
Clearance Time (s)	5.0	5.0	3.0	5.0	5.0	3.0	3.0	5.0	5.0	3.0	5.0	5.0
Vehicle Extension (s)	3.0	3.0	3.0	3.0	3.0	3.0	3.0	3.0	3.0	3.0	3.0	3.0
Lane Grp Cap (vph)	555	962	358	279	737	331	150	2583	1043	164	2723	2037
v/s Ratio Prot	c0.15	0.13	0.00	0.09	c0.13	0.00	0.02	c0.46	0.01	c0.05	0.33	0.01
v/s Ratio Perm			0.00	0.11		0.00	0.23		0.02	0.43		0.04
v/c Ratio	0.90	0.68	0.00	0.79	0.90	0.01	0.45	0.91	0.05	0.81	0.61	0.07
Uniform Delay, d1	61.3	56.2	44.6	46.5	62.7	46.7	19.2	33.5	10.8	41.7	23.9	7.2
Progression Factor	1.00	1.00	1.00	1.00	1.00	1.00	1.00	1.00	1.00	1.00	1.00	1.00
Incremental Delay, d2	17.3	2.0	0.0	13.7	14.3	0.0	2.2	6.1	0.0	25.3	0.4	0.0
Delay (s)	78.5	58.2	44.6	60.2	77.0	46.7	21.4	39.6	10.8	67.0	24.3	7.2
Level of Service	E	E	D	E	E	D	C	D	B	E	C	A
Approach Delay (s)		66.9			72.6			38.3			25.5	
Approach LOS		E			E			D			C	

Intersection Summary			
HCM Average Control Delay	44.2	HCM Level of Service	D
HCM Volume to Capacity ratio	0.90		
Actuated Cycle Length (s)	149.0	Sum of lost time (s)	18.0
Intersection Capacity Utilization	82.9%	ICU Level of Service	E
Analysis Period (min)	15		
c Critical Lane Group			

Movement	EBL	EBT	EBR	WBL	WBT	WBR	NBL	NBT	NBR	SBL	SBT	SBR
Lane Configurations												
Volume (vph)	419	551	4	185	559	7	57	1972	55	112	1396	163
Movement Number	7	4	14	3	8	18	5	2	12	1	6	16
Initial Queue, veh	0	0	0	0	0	0	0	0	0	0	0	0
Ped-Bike Adj. Factor (A_pbT)	1.00		1.00	1.00		1.00	1.00		1.00	1.00		1.00
Parking, Bus Adj. Factors	1.00	1.00	1.00	1.00	1.00	1.00	1.00	1.00	1.00	1.00	1.00	1.00
Adj. Sat. Flow Rate, veh/h/ln	1863	1863	1863	1863	1863	1863	1863	1863	1863	1863	1863	1863
Lanes	2	3	1	1	3	1	1	3	1	1	3	2
Lane Assignment												
Capacity, veh/h	550	962	350	314	752	316	199	2628	1006	156	2726	1939
Proportion Arriving On Green	0.16	0.19	0.19	0.12	0.15	0.15	0.03	0.52	0.52	0.05	0.54	0.54
Movement Delay, s/veh	76.9	56.7	44.1	51.2	72.4	46.8	20.3	36.7	10.2	63.4	23.6	7.2
Movement LOS	E	E	D	D	E	D	C	D	B	E	C	A
Approach Volume, veh/h		1160			894			2481			1989	
Approach Delay, s/veh		65.3			66.9			35.5			24.7	
Approach LOS		E			E			D			C	

Timer:	1	2	3	4	5	6	7	8
Assigned Phase	1	2	3	4	5	6	7	8
Case No	1.1	3.0	1.1	3.0	1.1	3.0	2.0	3.0
Phase Duration (G+Y+Rc), s	10.47	80.00	22.22	32.45	7.68	82.79	28.20	26.48
Change Period (Y+Rc), s	3.00	5.00	5.00	5.00	3.00	5.00	5.00	5.00
Max. Allowable Headway (MAH), s	4.00	3.91	4.00	3.91	4.00	3.91	4.00	3.91
Maximum Green Setting (Gmax), s	10.00	75.00	19.00	28.00	7.00	78.00	25.00	22.00
Max. Queue Clearance Time (g_c+I1), s	7.42	62.15	17.09	19.43	4.60	34.69	22.67	20.62
Green Extension Time (g_e), s	0.08	12.05	0.13	3.81	0.03	35.91	0.53	0.86
Probability of Phase Call (p_c)	0.995	1.000	1.000	1.000	0.935	1.000	1.000	1.000
Probability of Max Out (p_x)	1.000	0.936	1.000	0.455	1.000	0.748	1.000	1.000

Left-Turn Movement Data				
Assigned Movement	1	3	5	7
Mvmt. Sat Flow, veh/h	1774.04	1774.04	1774.04	3441.64

Through Movement Data				
Assigned Movement	2	4	6	8
Mvmt. Sat Flow, veh/h	5085.29	5085.29	5085.29	5085.29

Right-Turn Movement Data				
Assigned Movement	12	14	16	18
Mvmt. Sat Flow, veh/h	1583.33	1583.33	2786.67	1583.33

Left Lane Group Data								
Assigned Movement	1	0	3	0	5	0	7	0
Lane Assignment	L (Pr/Pm)		L (Pr/Pm)		L (Pr/Pm)		L (Prot)	
Lanes in Group	1	0	1	0	1	0	2	0
Group Volume (v), veh/h	133.3	0.0	220.2	0.0	67.9	0.0	498.8	0.0
Group Sat. Flow (s), veh/h/ln	1774.0	0.0	1774.0	0.0	1774.0	0.0	1720.8	0.0
Queue Serve Time (g_s), s	5.4	0.0	15.1	0.0	2.6	0.0	20.7	0.0
Cycle Queue Clear Time (g_c), s	5.4	0.0	15.1	0.0	2.6	0.0	20.7	0.0

Perm LT Sat Flow Rate (s_l), veh/h/ln	152.1	0.0	774.2	0.0	298.1	0.0	0.0	0.0
Shared LT Sat Flow (s_sh), veh/h/ln	0.0	0.0	0.0	0.0	0.0	0.0	0.0	0.0
Perm LT Eff. Green (g_p), s	79.6	0.0	21.5	0.0	75.0	0.0	0.0	0.0
Perm LT Serve Time (g_u), s	14.9	0.0	10.0	0.0	45.1	0.0	0.0	0.0
Perm LT Que Serve Time (g_ps), s	14.9	0.0	4.6	0.0	8.8	0.0	0.0	0.0
Time to First Blk (g_f), s	0.0	0.0	0.0	0.0	0.0	0.0	0.0	0.0
Serve Time pre Blk (g_fs), s	0.0	0.0	0.0	0.0	0.0	0.0	0.0	0.0
Proportion LT Inside Lane (P_L)	1.000	0.000	1.000	0.000	1.000	0.000	1.000	0.000
Lane Group Capacity (c), veh/h	156.5	0.0	313.5	0.0	199.4	0.0	550.1	0.0
Volume-to-Capacity Ratio (X)	0.852	0.000	0.702	0.000	0.340	0.000	0.907	0.000
Available Capacity (c_a), veh/h	187.4	0.0	335.3	0.0	227.8	0.0	592.8	0.0
Upstream Filter Factor (I)	1.000	0.000	1.000	0.000	1.000	0.000	1.000	0.000
Uniform Delay (d1), s/veh	37.3	0.0	45.2	0.0	19.3	0.0	59.9	0.0
Incremental Delay (d2), s/veh	26.1	0.0	6.0	0.0	1.0	0.0	17.0	0.0
Initial Queue Delay (d3), s/veh	0.0	0.0	0.0	0.0	0.0	0.0	0.0	0.0
Control Delay (d), s/veh	63.4	0.0	51.2	0.0	20.3	0.0	76.9	0.0
First-Term Queue (Q1), veh/ln	2.9	0.0	6.7	0.0	1.1	0.0	9.0	0.0
Second-Term Queue (Q2), veh/ln	1.1	0.0	0.5	0.0	0.1	0.0	1.3	0.0
Third-Term Queue (Q3), veh/ln	0.0	0.0	0.0	0.0	0.0	0.0	0.0	0.0
Percentile bk-of-que factor (f_B%)	1.000	0.000	1.000	0.000	1.000	0.000	1.000	0.000
Percentile Back of Queue (Q%), veh/ln	4.1	0.0	7.2	0.0	1.1	0.0	10.3	0.0
Percentile Storage Ratio (RQ%)	0.80	0.00	0.64	0.00	0.18	0.00	1.31	0.00
Initial Queue (Qb), veh	0.0	0.0	0.0	0.0	0.0	0.0	0.0	0.0
Final (Residual) Queue (Qe), veh	0.0	0.0	0.0	0.0	0.0	0.0	0.0	0.0
Saturated Delay (ds), s/veh	0.0	0.0	0.0	0.0	0.0	0.0	0.0	0.0
Saturated Queue (Qs), veh	0.0	0.0	0.0	0.0	0.0	0.0	0.0	0.0
Saturated Capacity (cs), veh/h	0.0	0.0	0.0	0.0	0.0	0.0	0.0	0.0
Initial Queue Clear Time (tc), h	0.0	0.0	0.0	0.0	0.0	0.0	0.0	0.0
Middle Lane Group Data								
Assigned Movement	0	2	0	4	0	6	0	8
Lane Assignment		T		T		T		T
Lanes in Group	0	3	0	3	0	3	0	3
Group Volume (v), veh/h	0.0	2347.6	0.0	656.0	0.0	1661.9	0.0	665.5
Group Sat. Flow (s), veh/h/ln	0.0	1695.1	0.0	1695.1	0.0	1695.1	0.0	1695.1
Queue Serve Time (g_s), s	0.0	60.1	0.0	17.4	0.0	32.7	0.0	18.6
Cycle Queue Clear Time (g_c), s	0.0	60.1	0.0	17.4	0.0	32.7	0.0	18.6
Lane Group Capacity (c), veh/h	0.0	2627.8	0.0	961.9	0.0	2725.6	0.0	752.4
Volume-to-Capacity Ratio (X)	0.000	0.893	0.000	0.682	0.000	0.610	0.000	0.884
Available Capacity (c_a), veh/h	0.0	2627.8	0.0	981.0	0.0	2732.9	0.0	770.8
Upstream Filter Factor (I)	0.000	1.000	0.000	1.000	0.000	1.000	0.000	1.000
Uniform Delay (d1), s/veh	0.0	31.5	0.0	54.8	0.0	23.2	0.0	60.6
Incremental Delay (d2), s/veh	0.0	5.2	0.0	1.9	0.0	0.4	0.0	11.7
Initial Queue Delay (d3), s/veh	0.0	0.0	0.0	0.0	0.0	0.0	0.0	0.0
Control Delay (d), s/veh	0.0	36.7	0.0	56.7	0.0	23.6	0.0	72.4
First-Term Queue (Q1), veh/ln	0.0	24.1	0.0	7.5	0.0	13.0	0.0	8.0
Second-Term Queue (Q2), veh/ln	0.0	1.3	0.0	0.2	0.0	0.1	0.0	0.8
Third-Term Queue (Q3), veh/ln	0.0	0.0	0.0	0.0	0.0	0.0	0.0	0.0
Percentile bk-of-que factor (f_B%)	0.000	1.000	0.000	1.000	0.000	1.000	0.000	1.000
Percentile Back of Queue (Q%), veh/ln	0.0	25.4	0.0	7.7	0.0	13.1	0.0	8.8
Percentile Storage Ratio (RQ%)	0.00	1.49	0.00	0.43	0.00	0.47	0.00	0.65

Initial Queue (Qb), veh	0.0	0.0	0.0	0.0	0.0	0.0	0.0	0.0
Final (Residual) Queue (Qe), veh	0.0	0.0	0.0	0.0	0.0	0.0	0.0	0.0
Saturated Delay (ds), s/veh	0.0	0.0	0.0	0.0	0.0	0.0	0.0	0.0
Saturated Queue (Qs), veh	0.0	0.0	0.0	0.0	0.0	0.0	0.0	0.0
Saturated Capacity (cs), veh/h	0.0	0.0	0.0	0.0	0.0	0.0	0.0	0.0
Initial Queue Clear Time (tc), h	0.0	0.0	0.0	0.0	0.0	0.0	0.0	0.0

Right Lane Group Data								
Assigned Movement	0	12	0	14	0	16	0	18
Lane Assignment		R		R		R		R
Lanes in Group	0	1	0	1	0	2	0	1
Group Volume (v), veh/h	0.0	65.5	0.0	4.8	0.0	194.0	0.0	8.3
Group Sat. Flow (s), veh/h/ln	0.0	1583.3	0.0	1583.3	0.0	1393.3	0.0	1583.3
Queue Serve Time (g_s), s	0.0	2.3	0.0	0.3	0.0	3.3	0.0	0.6
Cycle Queue Clear Time (g_c), s	0.0	2.3	0.0	0.3	0.0	3.3	0.0	0.6
Prot RT Sat Flow Rate (s_R), veh/h/ln	0.0	1583.3	0.0	1583.3	0.0	1393.3	0.0	1583.3
Prot RT Eff. Green (g_R), s	0.0	17.2	0.0	4.7	0.0	23.2	0.0	7.5
Proportion RT Outside Lane (P_R)	0.000	1.000	0.000	1.000	0.000	1.000	0.000	1.000
Lane Group Capacity (c), veh/h	0.0	1006.0	0.0	350.5	0.0	1939.0	0.0	315.8
Volume-to-Capacity Ratio (X)	0.000	0.065	0.000	0.014	0.000	0.100	0.000	0.026
Available Capacity (c_a), veh/h	0.0	1006.0	0.0	356.5	0.0	1942.9	0.0	321.5
Upstream Filter Factor (I)	0.000	1.000	0.000	1.000	0.000	1.000	0.000	1.000
Uniform Delay (d1), s/veh	0.0	10.1	0.0	44.1	0.0	7.2	0.0	46.8
Incremental Delay (d2), s/veh	0.0	0.1	0.0	0.0	0.0	0.0	0.0	0.0
Initial Queue Delay (d3), s/veh	0.0	0.0	0.0	0.0	0.0	0.0	0.0	0.0
Control Delay (d), s/veh	0.0	10.2	0.0	44.1	0.0	7.2	0.0	46.8
First-Term Queue (Q1), veh/ln	0.0	0.8	0.0	0.1	0.0	1.0	0.0	0.2
Second-Term Queue (Q2), veh/ln	0.0	0.0	0.0	0.0	0.0	0.0	0.0	0.0
Third-Term Queue (Q3), veh/ln	0.0	0.0	0.0	0.0	0.0	0.0	0.0	0.0
Percentile bk-of-que factor (f_B%)	0.000	1.000	0.000	1.000	0.000	1.000	0.000	1.000
Percentile Back of Queue (Q%), veh/ln	0.0	0.8	0.0	0.1	0.0	1.0	0.0	0.2
Percentile Storage Ratio (RQ%)	0.00	0.11	0.00	0.02	0.00	0.12	0.00	0.03
Initial Queue (Qb), veh	0.0	0.0	0.0	0.0	0.0	0.0	0.0	0.0
Final (Residual) Queue (Qe), veh	0.0	0.0	0.0	0.0	0.0	0.0	0.0	0.0
Saturated Delay (ds), s/veh	0.0	0.0	0.0	0.0	0.0	0.0	0.0	0.0
Saturated Queue (Qs), veh	0.0	0.0	0.0	0.0	0.0	0.0	0.0	0.0
Saturated Capacity (cs), veh/h	0.0	0.0	0.0	0.0	0.0	0.0	0.0	0.0
Initial Queue Clear Time (tc), h	0.0	0.0	0.0	0.0	0.0	0.0	0.0	0.0

Intersection Summary	
HCM Average Control Delay	41.8
HCM Level of Service	D

Lane Group	EBT	WBT	NET
Lane Group Flow (vph)	19	36	2807
v/c Ratio	0.32	0.43	0.60
Control Delay	110.7	96.2	2.4
Queue Delay	0.0	0.0	0.0
Total Delay	110.7	96.2	2.4
Queue Length 50th (ft)	26	40	205
Queue Length 95th (ft)	61	87	272
Internal Link Dist (ft)	48	206	515
Turn Bay Length (ft)			
Base Capacity (vph)	135	180	4689
Starvation Cap Reductn	0	0	0
Spillback Cap Reductn	0	0	0
Storage Cap Reductn	0	0	0
Reduced v/c Ratio	0.14	0.20	0.60

Intersection Summary

Movement	EBL	EBT	EBR	WBL	WBT	WBR	NEL	NET	NER	SWL	SWT	SWR
Lane Configurations												
Volume (vph)	14	4	0	0	25	10	36	2628	30	0	0	0
Ideal Flow (vphpl)	1900	1900	1900	1900	1900	1900	1900	1900	1900	1900	1900	1900
Total Lost time (s)		5.0			5.0			5.0				
Lane Util. Factor		1.00			1.00			0.91				
Frt		1.00			0.96			1.00				
Flt Protected		0.96			1.00			1.00				
Satd. Flow (prot)		1792			1793			5073				
Flt Permitted		0.75			1.00			1.00				
Satd. Flow (perm)		1391			1793			5073				
Peak-hour factor, PHF	0.96	0.96	0.96	0.96	0.96	0.96	0.96	0.96	0.96	0.96	0.96	0.96
Adj. Flow (vph)	15	4	0	0	26	10	38	2738	31	0	0	0
RTOR Reduction (vph)	0	0	0	0	7	0	0	0	0	0	0	0
Lane Group Flow (vph)	0	19	0	0	29	0	0	2807	0	0	0	0
Turn Type	Perm	NA			NA		Split	NA				
Protected Phases		4			8		2	2				
Permitted Phases	4							2				
Actuated Green, G (s)		7.7			7.7			190.2				
Effective Green, g (s)		7.7			7.7			190.2				
Actuated g/C Ratio		0.04			0.04			0.91				
Clearance Time (s)		5.0			5.0			5.0				
Vehicle Extension (s)		3.0			3.0			3.0				
Lane Grp Cap (vph)		52			66			4641				
v/s Ratio Prot					c0.02			c0.55				
v/s Ratio Perm		0.01										
v/c Ratio		0.37			0.44			0.60				
Uniform Delay, d1		97.7			98.0			1.7				
Progression Factor		1.00			1.00			1.00				
Incremental Delay, d2		4.3			4.7			0.6				
Delay (s)		102.0			102.7			2.3				
Level of Service		F			F			A				
Approach Delay (s)		102.0			102.7			2.3			0.0	
Approach LOS		F			F			A			A	

Intersection Summary			
HCM Average Control Delay	4.2	HCM Level of Service	A
HCM Volume to Capacity ratio	0.60		
Actuated Cycle Length (s)	207.9	Sum of lost time (s)	10.0
Intersection Capacity Utilization	68.2%	ICU Level of Service	C
Analysis Period (min)	15		
c Critical Lane Group			

Movement	EBL	EBT	EBR	WBL	WBT	WBR	NEL	NET	NER	SWL	SWT	SWR
Lane Configurations												
Volume (vph)	14	4	0	0	25	10	36	2628	30	0	0	0
Movement Number	7	4	14	3	8	18	5	2	12	1	6	16
Initial Queue, veh	0	0	0	0	0	0	0	0	0	0	0	0
Ped-Bike Adj. Factor (A_pbT)	1.00		1.00	1.00		1.00	1.00		1.00	1.00		1.00
Parking, Bus Adj. Factors	1.00	1.00	1.00	1.00	1.00	1.00	1.00	1.00	1.00	1.00	1.00	1.00
Adj. Sat. Flow Rate, veh/h/ln	1863	1863	1900	1900	1863	1863	1863	1863	1863	1900	1900	1900
Lanes	0	1	0	0	1	0	0	3	0	0	0	0
Lane Assignment												
Capacity, veh/h	53	11	0	0	37	15	65	5017	59	0	0	0
Proportion Arriving On Green	0.03	0.03	0.00	0.00	0.03	0.03	0.92	0.92	0.92	0.00	0.00	0.00
Movement Delay, s/veh	100.9	0.0	0.0	0.0	0.0	115.1	2.8	2.4	2.4	0.0	0.0	0.0
Movement LOS	F					F	A	A	A			
Approach Volume, veh/h		19			36			2806			0	
Approach Delay, s/veh		100.9			115.1			2.5			0.0	
Approach LOS		F			F			A				

Timer:	1	2	3	4	5	6	7	8
Assigned Phase		2		4				8
Case No		12.0		8.0				8.0
Phase Duration (G+Y+Rc), s		195.00		11.01				11.01
Change Period (Y+Rc), s		5.00		5.00				5.00
Max. Allowable Headway (MAH), s		3.91		4.00				4.00
Maximum Green Setting (Gmax), s		190.00		20.00				20.00
Max. Queue Clearance Time (g_c+I1), s		20.45		4.98				6.20
Green Extension Time (g_e), s		27.08		0.09				0.08
Probability of Phase Call (p_c)		1.000		0.958				0.958
Probability of Max Out (p_x)		0.019		0.000				0.000

Left-Turn Movement Data				
Assigned Movement		5		7
Mvmt. Sat Flow, veh/h		70.06		878.52

Through Movement Data				
Assigned Movement		2		4				8
Mvmt. Sat Flow, veh/h		5439.47		251.01				1266.67

Right-Turn Movement Data				
Assigned Movement		12		14				18
Mvmt. Sat Flow, veh/h		63.92		0.00				506.67

Left Lane Group Data								
Assigned Movement	0	5	0	7	0	0	0	0
Lane Assignment		L+T		L+T				
Lanes in Group	0	1	0	1	0	0	0	0
Group Volume (v), veh/h	0.0	995.2	0.0	18.8	0.0	0.0	0.0	0.0
Group Sat. Flow (s), veh/h/ln	0.0	1859.2	0.0	1129.5	0.0	0.0	0.0	0.0
Queue Serve Time (g_s), s	0.0	18.4	0.0	0.0	0.0	0.0	0.0	0.0
Cycle Queue Clear Time (g_c), s	0.0	18.4	0.0	3.0	0.0	0.0	0.0	0.0

Perm LT Sat Flow Rate (s_l), veh/h/ln	0.0	0.0	0.0	781.9	0.0	0.0	0.0	0.0
Shared LT Sat Flow (s_sh), veh/h/ln	0.0	0.0	0.0	1139.3	0.0	0.0	0.0	0.0
Perm LT Eff. Green (g_p), s	0.0	0.0	0.0	6.0	0.0	0.0	0.0	0.0
Perm LT Serve Time (g_u), s	0.0	0.0	0.0	1.8	0.0	0.0	0.0	0.0
Perm LT Que Serve Time (g_ps), s	0.0	0.0	0.0	0.0	0.0	0.0	0.0	0.0
Time to First Blk (g_f), s	0.0	0.0	0.0	0.6	0.0	0.0	0.0	6.0
Serve Time pre Blk (g_fs), s	0.0	0.0	0.0	0.6	0.0	0.0	0.0	0.0
Proportion LT Inside Lane (P_L)	0.000	0.038	0.000	0.778	0.000	0.000	0.000	0.000
Lane Group Capacity (c), veh/h	0.0	1714.7	0.0	64.0	0.0	0.0	0.0	0.0
Volume-to-Capacity Ratio (X)	0.000	0.580	0.000	0.293	0.000	0.000	0.000	0.000
Available Capacity (c_a), veh/h	0.0	1714.7	0.0	123.9	0.0	0.0	0.0	0.0
Upstream Filter Factor (I)	0.000	1.000	0.000	1.000	0.000	0.000	0.000	0.000
Uniform Delay (d1), s/veh	0.0	1.3	0.0	98.4	0.0	0.0	0.0	0.0
Incremental Delay (d2), s/veh	0.0	1.4	0.0	2.5	0.0	0.0	0.0	0.0
Initial Queue Delay (d3), s/veh	0.0	0.0	0.0	0.0	0.0	0.0	0.0	0.0
Control Delay (d), s/veh	0.0	2.8	0.0	100.9	0.0	0.0	0.0	0.0
First-Term Queue (Q1), veh/ln	0.0	3.4	0.0	1.0	0.0	0.0	0.0	0.0
Second-Term Queue (Q2), veh/ln	0.0	0.7	0.0	0.0	0.0	0.0	0.0	0.0
Third-Term Queue (Q3), veh/ln	0.0	0.0	0.0	0.0	0.0	0.0	0.0	0.0
Percentile bk-of-que factor (f_B%)	0.000	1.000	0.000	1.000	0.000	0.000	0.000	0.000
Percentile Back of Queue (Q%), veh/ln	0.0	4.0	0.0	1.1	0.0	0.0	0.0	0.0
Percentile Storage Ratio (RQ%)	0.00	0.19	0.00	0.25	0.00	0.00	0.00	0.00
Initial Queue (Qb), veh	0.0	0.0	0.0	0.0	0.0	0.0	0.0	0.0
Final (Residual) Queue (Qe), veh	0.0	0.0	0.0	0.0	0.0	0.0	0.0	0.0
Saturated Delay (ds), s/veh	0.0	0.0	0.0	0.0	0.0	0.0	0.0	0.0
Saturated Queue (Qs), veh	0.0	0.0	0.0	0.0	0.0	0.0	0.0	0.0
Saturated Capacity (cs), veh/h	0.0	0.0	0.0	0.0	0.0	0.0	0.0	0.0
Initial Queue Clear Time (tc), h	0.0	0.0	0.0	0.0	0.0	0.0	0.0	0.0
Middle Lane Group Data								
Assigned Movement	0	2	0	4	0	0	0	8
Lane Assignment		T						
Lanes in Group	0	1	0	0	0	0	0	0
Group Volume (v), veh/h	0.0	905.9	0.0	0.0	0.0	0.0	0.0	0.0
Group Sat. Flow (s), veh/h/ln	0.0	1862.7	0.0	0.0	0.0	0.0	0.0	0.0
Queue Serve Time (g_s), s	0.0	15.2	0.0	0.0	0.0	0.0	0.0	0.0
Cycle Queue Clear Time (g_c), s	0.0	15.2	0.0	0.0	0.0	0.0	0.0	0.0
Lane Group Capacity (c), veh/h	0.0	1717.9	0.0	0.0	0.0	0.0	0.0	0.0
Volume-to-Capacity Ratio (X)	0.000	0.527	0.000	0.000	0.000	0.000	0.000	0.000
Available Capacity (c_a), veh/h	0.0	1717.9	0.0	0.0	0.0	0.0	0.0	0.0
Upstream Filter Factor (I)	0.000	1.000	0.000	0.000	0.000	0.000	0.000	0.000
Uniform Delay (d1), s/veh	0.0	1.2	0.0	0.0	0.0	0.0	0.0	0.0
Incremental Delay (d2), s/veh	0.0	1.2	0.0	0.0	0.0	0.0	0.0	0.0
Initial Queue Delay (d3), s/veh	0.0	0.0	0.0	0.0	0.0	0.0	0.0	0.0
Control Delay (d), s/veh	0.0	2.4	0.0	0.0	0.0	0.0	0.0	0.0
First-Term Queue (Q1), veh/ln	0.0	2.8	0.0	0.0	0.0	0.0	0.0	0.0
Second-Term Queue (Q2), veh/ln	0.0	0.6	0.0	0.0	0.0	0.0	0.0	0.0
Third-Term Queue (Q3), veh/ln	0.0	0.0	0.0	0.0	0.0	0.0	0.0	0.0
Percentile bk-of-que factor (f_B%)	0.000	1.000	0.000	1.000	0.000	0.000	0.000	1.000
Percentile Back of Queue (Q%), veh/ln	0.0	3.3	0.0	0.0	0.0	0.0	0.0	0.0
Percentile Storage Ratio (RQ%)	0.00	0.15	0.00	0.00	0.00	0.00	0.00	0.00

Initial Queue (Qb), veh	0.0	0.0	0.0	0.0	0.0	0.0	0.0	0.0
Final (Residual) Queue (Qe), veh	0.0	0.0	0.0	0.0	0.0	0.0	0.0	0.0
Saturated Delay (ds), s/veh	0.0	0.0	0.0	0.0	0.0	0.0	0.0	0.0
Saturated Queue (Qs), veh	0.0	0.0	0.0	0.0	0.0	0.0	0.0	0.0
Saturated Capacity (cs), veh/h	0.0	0.0	0.0	0.0	0.0	0.0	0.0	0.0
Initial Queue Clear Time (tc), h	0.0	0.0	0.0	0.0	0.0	0.0	0.0	0.0
Right Lane Group Data								
Assigned Movement	0	12	0	14	0	0	0	18
Lane Assignment		T+R						T+R
Lanes in Group	0	1	0	0	0	0	0	1
Group Volume (v), veh/h	0.0	905.1	0.0	0.0	0.0	0.0	0.0	36.5
Group Sat. Flow (s), veh/h/ln	0.0	1851.5	0.0	0.0	0.0	0.0	0.0	1773.3
Queue Serve Time (g_s), s	0.0	15.3	0.0	0.0	0.0	0.0	0.0	4.2
Cycle Queue Clear Time (g_c), s	0.0	15.3	0.0	0.0	0.0	0.0	0.0	4.2
Prot RT Sat Flow Rate (s_R), veh/h/ln	0.0	0.0	0.0	0.0	0.0	0.0	0.0	0.0
Prot RT Eff. Green (g_R), s	0.0	0.0	0.0	0.0	0.0	0.0	0.0	0.0
Proportion RT Outside Lane (P_R)	0.000	0.035	0.000	0.000	0.000	0.000	0.000	0.286
Lane Group Capacity (c), veh/h	0.0	1707.5	0.0	0.0	0.0	0.0	0.0	51.8
Volume-to-Capacity Ratio (X)	0.000	0.530	0.000	0.000	0.000	0.000	0.000	0.704
Available Capacity (c_a), veh/h	0.0	1707.5	0.0	0.0	0.0	0.0	0.0	172.2
Upstream Filter Factor (I)	0.000	1.000	0.000	0.000	0.000	0.000	0.000	1.000
Uniform Delay (d1), s/veh	0.0	1.2	0.0	0.0	0.0	0.0	0.0	99.1
Incremental Delay (d2), s/veh	0.0	1.2	0.0	0.0	0.0	0.0	0.0	16.0
Initial Queue Delay (d3), s/veh	0.0	0.0	0.0	0.0	0.0	0.0	0.0	0.0
Control Delay (d), s/veh	0.0	2.4	0.0	0.0	0.0	0.0	0.0	115.1
First-Term Queue (Q1), veh/ln	0.0	2.8	0.0	0.0	0.0	0.0	0.0	2.0
Second-Term Queue (Q2), veh/ln	0.0	0.6	0.0	0.0	0.0	0.0	0.0	0.2
Third-Term Queue (Q3), veh/ln	0.0	0.0	0.0	0.0	0.0	0.0	0.0	0.0
Percentile bk-of-que factor (f_B%)	0.000	1.000	0.000	1.000	0.000	0.000	0.000	1.000
Percentile Back of Queue (Q%), veh/ln	0.0	3.3	0.0	0.0	0.0	0.0	0.0	2.2
Percentile Storage Ratio (RQ%)	0.00	0.15	0.00	0.00	0.00	0.00	0.00	0.25
Initial Queue (Qb), veh	0.0	0.0	0.0	0.0	0.0	0.0	0.0	0.0
Final (Residual) Queue (Qe), veh	0.0	0.0	0.0	0.0	0.0	0.0	0.0	0.0
Saturated Delay (ds), s/veh	0.0	0.0	0.0	0.0	0.0	0.0	0.0	0.0
Saturated Queue (Qs), veh	0.0	0.0	0.0	0.0	0.0	0.0	0.0	0.0
Saturated Capacity (cs), veh/h	0.0	0.0	0.0	0.0	0.0	0.0	0.0	0.0
Initial Queue Clear Time (tc), h	0.0	0.0	0.0	0.0	0.0	0.0	0.0	0.0
Intersection Summary								
HCM Average Control Delay		4.6						
HCM Level of Service		A						

Lane Group	EBT	WBT	NET
Lane Group Flow (vph)	14	62	2880
v/c Ratio	0.10	0.42	0.66
Control Delay	48.7	53.5	4.4
Queue Delay	0.0	0.0	0.7
Total Delay	48.7	53.5	5.1
Queue Length 50th (ft)	10	41	219
Queue Length 95th (ft)	29	80	315
Internal Link Dist (ft)	164	208	477
Turn Bay Length (ft)			
Base Capacity (vph)	251	262	4377
Starvation Cap Reductn	0	0	988
Spillback Cap Reductn	0	0	0
Storage Cap Reductn	0	0	0
Reduced v/c Ratio	0.06	0.24	0.85

Intersection Summary

Movement	EBL	EBT	EBR	WBL	WBT	WBR	NEL	NET	NER	SWL	SWT	SWR
Lane Configurations												
Volume (vph)	2	11	0	0	46	12	6	2631	42	0	0	0
Ideal Flow (vphpl)	1900	1900	1900	1900	1900	1900	1900	1900	1900	1900	1900	1900
Total Lost time (s)		5.0			5.0			5.0				
Lane Util. Factor		1.00			1.00			0.91				
Frt		1.00			0.97			1.00				
Flt Protected		0.99			1.00			1.00				
Satd. Flow (prot)		1850			1810			5073				
Flt Permitted		0.95			1.00			1.00				
Satd. Flow (perm)		1770			1810			5073				
Peak-hour factor, PHF	0.93	0.93	0.93	0.93	0.93	0.93	0.93	0.93	0.93	0.93	0.93	0.93
Adj. Flow (vph)	2	12	0	0	49	13	6	2829	45	0	0	0
RTOR Reduction (vph)	0	0	0	0	6	0	0	1	0	0	0	0
Lane Group Flow (vph)	0	14	0	0	56	0	0	2879	0	0	0	0
Turn Type	Perm	NA			NA		Perm	NA				
Protected Phases		4			8			2				
Permitted Phases	4						2					
Actuated Green, G (s)		7.7			7.7			96.5				
Effective Green, g (s)		7.7			7.7			96.5				
Actuated g/C Ratio		0.07			0.07			0.85				
Clearance Time (s)		5.0			5.0			5.0				
Vehicle Extension (s)		3.0			3.0			3.0				
Lane Grp Cap (vph)		119			122			4287				
v/s Ratio Prot					c0.03							
v/s Ratio Perm		0.01						0.57				
v/c Ratio		0.12			0.46			0.67				
Uniform Delay, d1		50.1			51.3			3.2				
Progression Factor		1.00			1.00			1.00				
Incremental Delay, d2		0.4			2.8			0.9				
Delay (s)		50.5			54.0			4.0				
Level of Service		D			D			A				
Approach Delay (s)		50.5			54.0			4.0			0.0	
Approach LOS		D			D			A			A	

Intersection Summary			
HCM Average Control Delay	5.3	HCM Level of Service	A
HCM Volume to Capacity ratio	0.66		
Actuated Cycle Length (s)	114.2	Sum of lost time (s)	10.0
Intersection Capacity Utilization	63.6%	ICU Level of Service	B
Analysis Period (min)	15		
c Critical Lane Group			

Movement	EBL	EBT	EBR	WBL	WBT	WBR	NEL	NET	NER	SWL	SWT	SWR
Lane Configurations												
Volume (vph)	2	11	0	0	46	12	6	2631	42	0	0	0
Movement Number	7	4	14	3	8	18	5	2	12	1	6	16
Initial Queue, veh	0	0	0	0	0	0	0	0	0	0	0	0
Ped-Bike Adj. Factor (A_pbT)	1.00		1.00	1.00		1.00	1.00		1.00	1.00		1.00
Parking, Bus Adj. Factors	1.00	1.00	1.00	1.00	1.00	1.00	1.00	1.00	1.00	1.00	1.00	1.00
Adj. Sat. Flow Rate, veh/h/ln	1863	1863	1900	1900	1863	1863	1863	1863	1863	1900	1900	1900
Lanes	0	1	0	0	1	0	0	3	0	0	0	0
Lane Assignment												
Capacity, veh/h	49	79	0	0	69	18	37	3997	63	0	0	0
Proportion Arriving On Green	0.05	0.05	0.00	0.00	0.05	0.05	0.85	0.85	0.85	0.00	0.00	0.00
Movement Delay, s/veh	45.4	0.0	0.0	0.0	0.0	56.5	13.1	5.7	5.9	0.0	0.0	0.0
Movement LOS	D					E	B	A	A			
Approach Volume, veh/h		14			62			2881			0	
Approach Delay, s/veh		45.4			56.5			7.9			0.0	
Approach LOS		D			E			A				

Timer:	1	2	3	4	5	6	7	8
Assigned Phase		2		4				8
Case No		8.0		8.0				8.0
Phase Duration (G+Y+Rc), s		89.00		9.81				9.81
Change Period (Y+Rc), s		5.00		5.00				5.00
Max. Allowable Headway (MAH), s		3.91		3.97				3.97
Maximum Green Setting (Gmax), s		84.00		16.00				16.00
Max. Queue Clearance Time (g_c+I1), s		86.00		2.71				5.38
Green Extension Time (g_e), s		0.00		0.13				0.11
Probability of Phase Call (p_c)		1.000		0.877				0.877
Probability of Max Out (p_x)		1.000		0.000				0.001

Left-Turn Movement Data				
Assigned Movement		5		7
Mvmt. Sat Flow, veh/h		10.73		270.82

Through Movement Data				
Assigned Movement		2		4				8
Mvmt. Sat Flow, veh/h		4691.02		1489.53				1425.31

Right-Turn Movement Data				
Assigned Movement		12		14				18
Mvmt. Sat Flow, veh/h		74.52		0.00				371.82

Left Lane Group Data								
Assigned Movement	0	5	0	7	0	0	0	0
Lane Assignment		L+T		L+T				
Lanes in Group	0	1	0	1	0	0	0	0
Group Volume (v), veh/h	0.0	841.7	0.0	14.0	0.0	0.0	0.0	0.0
Group Sat. Flow (s), veh/h/ln	0.0	1399.2	0.0	1760.3	0.0	0.0	0.0	0.0
Queue Serve Time (g_s), s	0.0	0.0	0.0	0.0	0.0	0.0	0.0	0.0
Cycle Queue Clear Time (g_c), s	0.0	84.0	0.0	0.7	0.0	0.0	0.0	0.0

Perm LT Sat Flow Rate (s_l), veh/h/ln	0.0	800.0	0.0	769.2	0.0	0.0	0.0	0.0
Shared LT Sat Flow (s_sh), veh/h/ln	0.0	0.0	0.0	1862.7	0.0	0.0	0.0	0.0
Perm LT Eff. Green (g_p), s	0.0	84.0	0.0	4.8	0.0	0.0	0.0	0.0
Perm LT Serve Time (g_u), s	0.0	0.0	0.0	1.4	0.0	0.0	0.0	0.0
Perm LT Que Serve Time (g_ps), s	0.0	0.0	0.0	0.0	0.0	0.0	0.0	0.0
Time to First Blk (g_f), s	0.0	63.1	0.0	2.2	0.0	0.0	0.0	4.8
Serve Time pre Blk (g_fs), s	0.0	25.9	0.0	0.7	0.0	0.0	0.0	0.0
Proportion LT Inside Lane (P_L)	0.000	0.008	0.000	0.154	0.000	0.000	0.000	0.000
Lane Group Capacity (c), veh/h	0.0	1226.2	0.0	127.8	0.0	0.0	0.0	0.0
Volume-to-Capacity Ratio (X)	0.000	0.686	0.000	0.109	0.000	0.000	0.000	0.000
Available Capacity (c_a), veh/h	0.0	1226.2	0.0	299.8	0.0	0.0	0.0	0.0
Upstream Filter Factor (I)	0.000	1.000	0.000	1.000	0.000	0.000	0.000	0.000
Uniform Delay (d1), s/veh	0.0	9.9	0.0	45.0	0.0	0.0	0.0	0.0
Incremental Delay (d2), s/veh	0.0	3.1	0.0	0.4	0.0	0.0	0.0	0.0
Initial Queue Delay (d3), s/veh	0.0	0.0	0.0	0.0	0.0	0.0	0.0	0.0
Control Delay (d), s/veh	0.0	13.1	0.0	45.4	0.0	0.0	0.0	0.0
First-Term Queue (Q1), veh/ln	0.0	9.0	0.0	0.3	0.0	0.0	0.0	0.0
Second-Term Queue (Q2), veh/ln	0.0	1.1	0.0	0.0	0.0	0.0	0.0	0.0
Third-Term Queue (Q3), veh/ln	0.0	0.0	0.0	0.0	0.0	0.0	0.0	0.0
Percentile bk-of-que factor (f_B%)	0.000	1.000	0.000	1.000	0.000	0.000	0.000	0.000
Percentile Back of Queue (Q%), veh/ln	0.0	10.0	0.0	0.3	0.0	0.0	0.0	0.0
Percentile Storage Ratio (RQ%)	0.00	0.53	0.00	0.04	0.00	0.00	0.00	0.00
Initial Queue (Qb), veh	0.0	0.0	0.0	0.0	0.0	0.0	0.0	0.0
Final (Residual) Queue (Qe), veh	0.0	0.0	0.0	0.0	0.0	0.0	0.0	0.0
Saturated Delay (ds), s/veh	0.0	0.0	0.0	0.0	0.0	0.0	0.0	0.0
Saturated Queue (Qs), veh	0.0	0.0	0.0	0.0	0.0	0.0	0.0	0.0
Saturated Capacity (cs), veh/h	0.0	0.0	0.0	0.0	0.0	0.0	0.0	0.0
Initial Queue Clear Time (tc), h	0.0	0.0	0.0	0.0	0.0	0.0	0.0	0.0
Middle Lane Group Data								
Assigned Movement	0	2	0	4	0	0	0	8
Lane Assignment		T						
Lanes in Group	0	1	0	0	0	0	0	0
Group Volume (v), veh/h	0.0	1019.7	0.0	0.0	0.0	0.0	0.0	0.0
Group Sat. Flow (s), veh/h/ln	0.0	1695.1	0.0	0.0	0.0	0.0	0.0	0.0
Queue Serve Time (g_s), s	0.0	22.4	0.0	0.0	0.0	0.0	0.0	0.0
Cycle Queue Clear Time (g_c), s	0.0	22.4	0.0	0.0	0.0	0.0	0.0	0.0
Lane Group Capacity (c), veh/h	0.0	1441.0	0.0	0.0	0.0	0.0	0.0	0.0
Volume-to-Capacity Ratio (X)	0.000	0.708	0.000	0.000	0.000	0.000	0.000	0.000
Available Capacity (c_a), veh/h	0.0	1441.0	0.0	0.0	0.0	0.0	0.0	0.0
Upstream Filter Factor (I)	0.000	1.000	0.000	0.000	0.000	0.000	0.000	0.000
Uniform Delay (d1), s/veh	0.0	2.8	0.0	0.0	0.0	0.0	0.0	0.0
Incremental Delay (d2), s/veh	0.0	3.0	0.0	0.0	0.0	0.0	0.0	0.0
Initial Queue Delay (d3), s/veh	0.0	0.0	0.0	0.0	0.0	0.0	0.0	0.0
Control Delay (d), s/veh	0.0	5.7	0.0	0.0	0.0	0.0	0.0	0.0
First-Term Queue (Q1), veh/ln	0.0	3.1	0.0	0.0	0.0	0.0	0.0	0.0
Second-Term Queue (Q2), veh/ln	0.0	1.2	0.0	0.0	0.0	0.0	0.0	0.0
Third-Term Queue (Q3), veh/ln	0.0	0.0	0.0	0.0	0.0	0.0	0.0	0.0
Percentile bk-of-que factor (f_B%)	0.000	1.000	0.000	1.000	0.000	0.000	0.000	1.000
Percentile Back of Queue (Q%), veh/ln	0.0	4.3	0.0	0.0	0.0	0.0	0.0	0.0
Percentile Storage Ratio (RQ%)	0.00	0.23	0.00	0.00	0.00	0.00	0.00	0.00

Initial Queue (Qb), veh	0.0	0.0	0.0	0.0	0.0	0.0	0.0	0.0
Final (Residual) Queue (Qe), veh	0.0	0.0	0.0	0.0	0.0	0.0	0.0	0.0
Saturated Delay (ds), s/veh	0.0	0.0	0.0	0.0	0.0	0.0	0.0	0.0
Saturated Queue (Qs), veh	0.0	0.0	0.0	0.0	0.0	0.0	0.0	0.0
Saturated Capacity (cs), veh/h	0.0	0.0	0.0	0.0	0.0	0.0	0.0	0.0
Initial Queue Clear Time (tc), h	0.0	0.0	0.0	0.0	0.0	0.0	0.0	0.0

Right Lane Group Data								
Assigned Movement	0	12	0	14	0	0	0	18
Lane Assignment		T+R						T+R
Lanes in Group	0	1	0	0	0	0	0	1
Group Volume (v), veh/h	0.0	1019.3	0.0	0.0	0.0	0.0	0.0	62.4
Group Sat. Flow (s), veh/h/ln	0.0	1681.9	0.0	0.0	0.0	0.0	0.0	1797.1
Queue Serve Time (g_s), s	0.0	22.8	0.0	0.0	0.0	0.0	0.0	3.4
Cycle Queue Clear Time (g_c), s	0.0	22.8	0.0	0.0	0.0	0.0	0.0	3.4
Prot RT Sat Flow Rate (s_R), veh/h/ln	0.0	0.0	0.0	0.0	0.0	0.0	0.0	0.0
Prot RT Eff. Green (g_R), s	0.0	0.0	0.0	0.0	0.0	0.0	0.0	0.0
Proportion RT Outside Lane (P_R)	0.000	0.044	0.000	0.000	0.000	0.000	0.000	0.207
Lane Group Capacity (c), veh/h	0.0	1429.8	0.0	0.0	0.0	0.0	0.0	87.6
Volume-to-Capacity Ratio (X)	0.000	0.713	0.000	0.000	0.000	0.000	0.000	0.712
Available Capacity (c_a), veh/h	0.0	1429.8	0.0	0.0	0.0	0.0	0.0	291.0
Upstream Filter Factor (I)	0.000	1.000	0.000	0.000	0.000	0.000	0.000	1.000
Uniform Delay (d1), s/veh	0.0	2.8	0.0	0.0	0.0	0.0	0.0	46.3
Incremental Delay (d2), s/veh	0.0	3.1	0.0	0.0	0.0	0.0	0.0	10.2
Initial Queue Delay (d3), s/veh	0.0	0.0	0.0	0.0	0.0	0.0	0.0	0.0
Control Delay (d), s/veh	0.0	5.9	0.0	0.0	0.0	0.0	0.0	56.5
First-Term Queue (Q1), veh/ln	0.0	3.2	0.0	0.0	0.0	0.0	0.0	1.5
Second-Term Queue (Q2), veh/ln	0.0	1.2	0.0	0.0	0.0	0.0	0.0	0.2
Third-Term Queue (Q3), veh/ln	0.0	0.0	0.0	0.0	0.0	0.0	0.0	0.0
Percentile bk-of-que factor (f_B%)	0.000	1.000	0.000	1.000	0.000	0.000	0.000	1.000
Percentile Back of Queue (Q%), veh/ln	0.0	4.4	0.0	0.0	0.0	0.0	0.0	1.7
Percentile Storage Ratio (RQ%)	0.00	0.23	0.00	0.00	0.00	0.00	0.00	0.20
Initial Queue (Qb), veh	0.0	0.0	0.0	0.0	0.0	0.0	0.0	0.0
Final (Residual) Queue (Qe), veh	0.0	0.0	0.0	0.0	0.0	0.0	0.0	0.0
Saturated Delay (ds), s/veh	0.0	0.0	0.0	0.0	0.0	0.0	0.0	0.0
Saturated Queue (Qs), veh	0.0	0.0	0.0	0.0	0.0	0.0	0.0	0.0
Saturated Capacity (cs), veh/h	0.0	0.0	0.0	0.0	0.0	0.0	0.0	0.0
Initial Queue Clear Time (tc), h	0.0	0.0	0.0	0.0	0.0	0.0	0.0	0.0

Intersection Summary	
HCM Average Control Delay	9.1
HCM Level of Service	A

Movement	EBL	EBR	NBL	NBT	SBT	SBR
Lane Configurations						
Volume (veh/h)	2	0	5	323	87	2
Sign Control	Stop			Free	Free	
Grade	0%			0%	0%	
Peak Hour Factor	0.92	0.92	0.92	0.92	0.92	0.92
Hourly flow rate (vph)	2	0	5	351	95	2
Pedestrians						
Lane Width (ft)						
Walking Speed (ft/s)						
Percent Blockage						
Right turn flare (veh)						
Median type				None	None	
Median storage veh)						
Upstream signal (ft)				296		
pX, platoon unblocked						
vC, conflicting volume	458	96	97			
vC1, stage 1 conf vol						
vC2, stage 2 conf vol						
vCu, unblocked vol	458	96	97			
tC, single (s)	6.4	6.2	4.1			
tC, 2 stage (s)						
tF (s)	3.5	3.3	2.2			
p0 queue free %	100	100	100			
cM capacity (veh/h)	559	961	1497			

Direction, Lane #	EB 1	NB 1	SB 1
Volume Total	2	357	97
Volume Left	2	5	0
Volume Right	0	0	2
cSH	559	1497	1700
Volume to Capacity	0.00	0.00	0.06
Queue Length 95th (ft)	0	0	0
Control Delay (s)	11.5	0.1	0.0
Lane LOS	B	A	
Approach Delay (s)	11.5	0.1	0.0
Approach LOS	B		

Intersection Summary			
Average Delay	0.2		
Intersection Capacity Utilization	31.0%	ICU Level of Service	A
Analysis Period (min)	15		

Movement	EBL	EBR	NBL	NBT	SBT	SBR
Lane Configurations						
Volume (veh/h)	11	1	11	321	88	1
Sign Control	Stop			Free	Free	
Grade	0%			0%	0%	
Peak Hour Factor	0.92	0.92	0.92	0.92	0.92	0.92
Hourly flow rate (vph)	12	1	12	349	96	1
Pedestrians						
Lane Width (ft)						
Walking Speed (ft/s)						
Percent Blockage						
Right turn flare (veh)						
Median type				None	None	
Median storage veh)						
Upstream signal (ft)				581		
pX, platoon unblocked						
vC, conflicting volume	469	96	97			
vC1, stage 1 conf vol						
vC2, stage 2 conf vol						
vCu, unblocked vol	469	96	97			
tC, single (s)	6.4	6.2	4.1			
tC, 2 stage (s)						
tF (s)	3.5	3.3	2.2			
p0 queue free %	98	100	99			
cM capacity (veh/h)	548	960	1497			

Direction, Lane #	EB 1	NB 1	SB 1
Volume Total	13	361	97
Volume Left	12	12	0
Volume Right	1	0	1
cSH	569	1497	1700
Volume to Capacity	0.02	0.01	0.06
Queue Length 95th (ft)	2	1	0
Control Delay (s)	11.5	0.3	0.0
Lane LOS	B	A	
Approach Delay (s)	11.5	0.3	0.0
Approach LOS	B		

Intersection Summary			
Average Delay	0.6		
Intersection Capacity Utilization	34.2%	ICU Level of Service	A
Analysis Period (min)	15		

Movement	EBL	EBR	NBL	NBT	SBT	SBR
Lane Configurations						
Volume (veh/h)	28	11	9	317	79	5
Sign Control	Stop			Free	Free	
Grade	0%			0%	0%	
Peak Hour Factor	0.92	0.92	0.92	0.92	0.92	0.92
Hourly flow rate (vph)	30	12	10	345	86	5
Pedestrians	80					
Lane Width (ft)	12.0					
Walking Speed (ft/s)	4.0					
Percent Blockage	7					
Right turn flare (veh)						
Median type				None	None	
Median storage veh)						
Upstream signal (ft)				866		
pX, platoon unblocked						
vC, conflicting volume	533	169	171			
vC1, stage 1 conf vol						
vC2, stage 2 conf vol						
vCu, unblocked vol	533	169	171			
tC, single (s)	6.4	6.2	4.1			
tC, 2 stage (s)						
tF (s)	3.5	3.3	2.2			
p0 queue free %	94	99	99			
cM capacity (veh/h)	470	817	1312			

Direction, Lane #	EB 1	NB 1	SB 1
Volume Total	42	354	91
Volume Left	30	10	0
Volume Right	12	0	5
cSH	534	1312	1700
Volume to Capacity	0.08	0.01	0.05
Queue Length 95th (ft)	6	1	0
Control Delay (s)	12.3	0.3	0.0
Lane LOS	B	A	
Approach Delay (s)	12.3	0.3	0.0
Approach LOS	B		

Intersection Summary			
Average Delay	1.3		
Intersection Capacity Utilization	33.8%	ICU Level of Service	A
Analysis Period (min)	15		

Movement	EBL	EBR	NBL	NBT	SBT	SBR
Lane Configurations						
Volume (veh/h)	26	22	22	298	50	15
Sign Control	Stop			Free	Free	
Grade	0%			0%	0%	
Peak Hour Factor	0.92	0.92	0.92	0.92	0.92	0.92
Hourly flow rate (vph)	28	24	24	324	54	16
Pedestrians						
Lane Width (ft)						
Walking Speed (ft/s)						
Percent Blockage						
Right turn flare (veh)						
Median type				None	None	
Median storage veh)						
Upstream signal (ft)						
pX, platoon unblocked						
vC, conflicting volume	434	62	71			
vC1, stage 1 conf vol						
vC2, stage 2 conf vol						
vCu, unblocked vol	434	62	71			
tC, single (s)	6.4	6.2	4.1			
tC, 2 stage (s)						
tF (s)	3.5	3.3	2.2			
p0 queue free %	95	98	98			
cM capacity (veh/h)	570	1002	1530			

Direction, Lane #	EB 1	NB 1	SB 1
Volume Total	52	348	71
Volume Left	28	24	0
Volume Right	24	0	16
cSH	710	1530	1700
Volume to Capacity	0.07	0.02	0.04
Queue Length 95th (ft)	6	1	0
Control Delay (s)	10.5	0.6	0.0
Lane LOS	B	A	
Approach Delay (s)	10.5	0.6	0.0
Approach LOS	B		

Intersection Summary			
Average Delay	1.6		
Intersection Capacity Utilization	33.6%	ICU Level of Service	A
Analysis Period (min)	15		

Movement	EBL	EBT	EBR	WBL	WBT	WBR	NBL	NBT	NBR	SBL	SBT	SBR
Lane Configurations												
Sign Control		Stop			Stop			Stop			Stop	
Volume (vph)	4	116	49	34	102	1	21	246	18	1	1	1
Peak Hour Factor	0.92	0.92	0.92	0.92	0.92	0.92	0.92	0.92	0.92	0.92	0.92	0.92
Hourly flow rate (vph)	4	126	53	37	111	1	23	267	20	1	1	1

Direction, Lane #	EB 1	WB 1	NB 1	SB 1
Volume Total (vph)	184	149	310	3
Volume Left (vph)	4	37	23	1
Volume Right (vph)	53	1	20	1
Hadj (s)	-0.14	0.08	0.01	-0.10
Departure Headway (s)	4.8	5.0	4.7	5.1
Degree Utilization, x	0.24	0.21	0.41	0.00
Capacity (veh/h)	702	667	723	632
Control Delay (s)	9.3	9.3	11.0	8.1
Approach Delay (s)	9.3	9.3	11.0	8.1
Approach LOS	A	A	B	A

Intersection Summary			
Delay	10.1		
HCM Level of Service	B		
Intersection Capacity Utilization	42.4%	ICU Level of Service	A
Analysis Period (min)	15		

HCM Unsignalized Intersection Capacity Analysis
1: SW 97th Ave. & SW 174th St.

2/18/2015

Movement	EBL	EBT	EBR	WBL	WBT	WBR	NBL	NBT	NBR	SBL	SBT	SBR
Lane Configurations												
Sign Control		Stop			Stop			Stop			Stop	
Volume (vph)	3	127	33	33	109	2	24	8	13	28	112	4
Peak Hour Factor	0.84	0.84	0.84	0.84	0.84	0.84	0.84	0.84	0.84	0.84	0.84	0.84
Hourly flow rate (vph)	4	151	39	39	130	2	29	10	15	33	133	5

Direction, Lane #	EB 1	WB 1	NB 1	SB 1
Volume Total (vph)	194	171	54	171
Volume Left (vph)	4	39	29	33
Volume Right (vph)	39	2	15	5
Hadj (s)	-0.08	0.07	-0.03	0.06
Departure Headway (s)	4.6	4.8	5.0	4.9
Degree Utilization, x	0.25	0.23	0.07	0.23
Capacity (veh/h)	732	706	653	679
Control Delay (s)	9.1	9.2	8.4	9.4
Approach Delay (s)	9.1	9.2	8.4	9.4
Approach LOS	A	A	A	A

Intersection Summary			
Delay	9.2		
HCM Level of Service	A		
Intersection Capacity Utilization	34.4%	ICU Level of Service	A
Analysis Period (min)	15		

Lane Group	EBL	EBR	NBL	NBT	NBR	SBT	NET
Lane Group Flow (vph)	2	136	4	12	305	132	2346
v/c Ratio	0.02	0.66	0.03	0.03	0.19	0.36	0.62
Control Delay	89.5	110.2	87.5	86.5	0.3	91.5	13.3
Queue Delay	0.0	0.0	0.0	0.0	0.0	0.0	0.2
Total Delay	89.5	110.2	87.5	86.5	0.3	91.5	13.5
Queue Length 50th (ft)	3	106	5	7	0	91	516
Queue Length 95th (ft)	15	154	20	22	0	136	597
Internal Link Dist (ft)	257			1041		665	1300
Turn Bay Length (ft)					200		
Base Capacity (vph)	210	331	115	370	1583	363	3808
Starvation Cap Reductn	0	0	0	0	0	0	590
Spillback Cap Reductn	0	0	0	0	0	0	0
Storage Cap Reductn	0	0	0	0	0	0	0
Reduced v/c Ratio	0.01	0.41	0.03	0.03	0.19	0.36	0.73

Intersection Summary

Movement	EBL	EBR	NBL	NBT	NBR	SBT	SBR	NEL2	NEL	NET	NER
Lane Configurations											
Volume (vph)	2	129	4	11	290	111	14	4	6	2192	28
Ideal Flow (vphpl)	1900	1900	1900	1900	1900	1900	1900	1900	1900	1900	1900
Total Lost time (s)	5.0	5.0	5.0	5.0	4.0	5.0				5.0	
Lane Util. Factor	1.00	0.88	1.00	0.95	1.00	0.95				0.91	
Frt	1.00	0.85	1.00	1.00	0.85	0.98				1.00	
Flt Protected	0.95	1.00	0.95	1.00	1.00	1.00				1.00	
Satd. Flow (prot)	1770	2787	1770	3539	1583	3479				5075	
Flt Permitted	0.95	1.00	0.59	1.00	1.00	1.00				1.00	
Satd. Flow (perm)	1770	2787	1099	3539	1583	3479				5075	
Peak-hour factor, PHF	0.95	0.95	0.95	0.95	0.95	0.95	0.95	0.95	0.95	0.95	0.95
Adj. Flow (vph)	2	136	4	12	305	117	15	4	6	2307	29
RTOR Reduction (vph)	0	0	0	0	0	0	0	0	0	0	0
Lane Group Flow (vph)	2	136	4	12	305	132	0	0	0	2346	0
Turn Type	NA	Perm	Perm	NA	Free	NA		Perm	Perm	NA	
Protected Phases	3			4		8				6	
Permitted Phases		3	4		Free			6	6		
Actuated Green, G (s)	15.6	15.6	22.0	22.0	210.6	22.0				158.0	
Effective Green, g (s)	15.6	15.6	22.0	22.0	210.6	22.0				158.0	
Actuated g/C Ratio	0.07	0.07	0.10	0.10	1.00	0.10				0.75	
Clearance Time (s)	5.0	5.0	5.0	5.0		5.0				5.0	
Vehicle Extension (s)	3.0	3.0	3.0	3.0		3.0				3.0	
Lane Grp Cap (vph)	131	206	115	370	1583	363				3807	
v/s Ratio Prot	0.00			0.00		c0.04					
v/s Ratio Perm		c0.05	0.00		0.19					0.46	
v/c Ratio	0.02	0.66	0.03	0.03	0.19	0.36				0.62	
Uniform Delay, d1	90.4	94.9	84.8	84.7	0.0	87.8				12.2	
Progression Factor	1.00	1.00	1.00	1.00	1.00	1.00				1.00	
Incremental Delay, d2	0.0	7.7	0.6	0.2	0.3	2.8				0.8	
Delay (s)	90.4	102.6	85.3	84.9	0.3	90.6				13.0	
Level of Service	F	F	F	F	A	F				B	
Approach Delay (s)	102.4			4.5		90.6				13.0	
Approach LOS	F			A		F				B	

Intersection Summary			
HCM Average Control Delay	19.7	HCM Level of Service	B
HCM Volume to Capacity ratio	0.59		
Actuated Cycle Length (s)	210.6	Sum of lost time (s)	15.0
Intersection Capacity Utilization	67.3%	ICU Level of Service	C
Analysis Period (min)	15		
c Critical Lane Group			

Movement	EBL	EBR	NBL	NBT	SBT	SBR
Lane Configurations						
Volume (veh/h)	48	40	31	260	138	71
Sign Control	Stop			Free	Free	
Grade	0%			0%	0%	
Peak Hour Factor	0.93	0.93	0.93	0.93	0.93	0.93
Hourly flow rate (vph)	52	43	33	280	148	76
Pedestrians						
Lane Width (ft)						
Walking Speed (ft/s)						
Percent Blockage						
Right turn flare (veh)						
Median type				None	None	
Median storage veh)						
Upstream signal (ft)					1121	
pX, platoon unblocked	0.97	0.97	0.97			
vC, conflicting volume	533	187	225			
vC1, stage 1 conf vol						
vC2, stage 2 conf vol						
vCu, unblocked vol	508	152	191			
tC, single (s)	6.4	6.2	4.1			
tC, 2 stage (s)						
tF (s)	3.5	3.3	2.2			
p0 queue free %	90	95	98			
cM capacity (veh/h)	499	871	1347			

Direction, Lane #	EB 1	NB 1	SB 1
Volume Total	95	313	225
Volume Left	52	33	0
Volume Right	43	0	76
cSH	619	1347	1700
Volume to Capacity	0.15	0.02	0.13
Queue Length 95th (ft)	13	2	0
Control Delay (s)	11.9	1.0	0.0
Lane LOS	B	A	
Approach Delay (s)	11.9	1.0	0.0
Approach LOS	B		

Intersection Summary			
Average Delay	2.3		
Intersection Capacity Utilization	42.1%	ICU Level of Service	A
Analysis Period (min)	15		

Movement	WBL	WBR	NBT	NBR	SBL	SBT
Lane Configurations						
Volume (veh/h)	134	49	230	24	32	120
Sign Control	Stop		Free			Free
Grade	0%		0%			0%
Peak Hour Factor	0.97	0.97	0.97	0.97	0.97	0.97
Hourly flow rate (vph)	138	51	237	25	33	124
Pedestrians						
Lane Width (ft)						
Walking Speed (ft/s)						
Percent Blockage						
Right turn flare (veh)						
Median type			None			None
Median storage veh)						
Upstream signal (ft)						
pX, platoon unblocked						
vC, conflicting volume	439	249			262	
vC1, stage 1 conf vol						
vC2, stage 2 conf vol						
vCu, unblocked vol	439	249			262	
tC, single (s)	6.4	6.2			4.1	
tC, 2 stage (s)						
tF (s)	3.5	3.3			2.2	
p0 queue free %	75	94			97	
cM capacity (veh/h)	561	789			1302	

Direction, Lane #	WB 1	NB 1	SB 1
Volume Total	189	262	157
Volume Left	138	0	33
Volume Right	51	25	0
cSH	608	1700	1302
Volume to Capacity	0.31	0.15	0.03
Queue Length 95th (ft)	33	0	2
Control Delay (s)	13.6	0.0	1.8
Lane LOS	B		A
Approach Delay (s)	13.6	0.0	1.8
Approach LOS	B		

Intersection Summary			
Average Delay	4.7		
Intersection Capacity Utilization	42.1%	ICU Level of Service	A
Analysis Period (min)	15		

Movement	EBL	EBR	NBL	NBT	SBT	SBR
Lane Configurations						
Volume (veh/h)	20	31	7	252	160	92
Sign Control	Stop			Free	Free	
Grade	0%			0%	0%	
Peak Hour Factor	0.94	0.94	0.94	0.94	0.94	0.94
Hourly flow rate (vph)	21	33	7	268	170	98
Pedestrians						
Lane Width (ft)						
Walking Speed (ft/s)						
Percent Blockage						
Right turn flare (veh)						
Median type				None	None	
Median storage veh)						
Upstream signal (ft)				1230		
pX, platoon unblocked						
vC, conflicting volume	502	219	268			
vC1, stage 1 conf vol						
vC2, stage 2 conf vol						
vCu, unblocked vol	502	219	268			
tC, single (s)	6.4	6.2	4.1			
tC, 2 stage (s)						
tF (s)	3.5	3.3	2.2			
p0 queue free %	96	96	99			
cM capacity (veh/h)	526	821	1296			

Direction, Lane #	EB 1	NB 1	SB 1
Volume Total	54	276	268
Volume Left	21	7	0
Volume Right	33	0	98
cSH	673	1296	1700
Volume to Capacity	0.08	0.01	0.16
Queue Length 95th (ft)	7	0	0
Control Delay (s)	10.8	0.3	0.0
Lane LOS	B	A	
Approach Delay (s)	10.8	0.3	0.0
Approach LOS	B		

Intersection Summary			
Average Delay	1.1		
Intersection Capacity Utilization	28.9%	ICU Level of Service	A
Analysis Period (min)	15		

Movement	EBL	EBT	EBR	WBL	WBT	WBR	NBL	NBT	NBR	SBL	SBT	SBR
Lane Configurations												
Volume (veh/h)	29	2	24	53	31	1	9	230	36	1	134	53
Sign Control		Stop			Stop			Free			Free	
Grade		0%			0%			0%			0%	
Peak Hour Factor	0.92	0.92	0.92	0.92	0.92	0.92	0.92	0.92	0.92	0.92	0.92	0.92
Hourly flow rate (vph)	32	2	26	58	34	1	10	250	39	1	146	58
Pedestrians												
Lane Width (ft)												
Walking Speed (ft/s)												
Percent Blockage												
Right turn flare (veh)												
Median type								None			None	
Median storage veh)												
Upstream signal (ft)								904				
pX, platoon unblocked												
vC, conflicting volume	484	485	174	493	495	270	203			289		
vC1, stage 1 conf vol												
vC2, stage 2 conf vol												
vCu, unblocked vol	484	485	174	493	495	270	203			289		
tC, single (s)	7.1	6.5	6.2	7.1	6.5	6.2	4.1			4.1		
tC, 2 stage (s)												
tF (s)	3.5	4.0	3.3	3.5	4.0	3.3	2.2			2.2		
p0 queue free %	93	100	97	88	93	100	99			100		
cM capacity (veh/h)	463	478	869	467	472	769	1368			1273		

Direction, Lane #	EB 1	WB 1	NB 1	SB 1
Volume Total	60	92	299	204
Volume Left	32	58	10	1
Volume Right	26	1	39	58
cSH	582	471	1368	1273
Volume to Capacity	0.10	0.20	0.01	0.00
Queue Length 95th (ft)	9	18	1	0
Control Delay (s)	11.9	14.5	0.3	0.0
Lane LOS	B	B	A	A
Approach Delay (s)	11.9	14.5	0.3	0.0
Approach LOS	B	B		

Intersection Summary			
Average Delay	3.3		
Intersection Capacity Utilization	33.5%	ICU Level of Service	A
Analysis Period (min)	15		

Movement	EBL	EBT	EBR	WBL	WBT	WBR	NBL	NBT	NBR	SBL	SBT	SBR
Lane Configurations												
Volume (veh/h)	6	3	4	19	1	1	5	265	11	0	207	6
Sign Control		Stop			Stop			Free			Free	
Grade		0%			0%			0%			0%	
Peak Hour Factor	0.95	0.95	0.95	0.95	0.95	0.95	0.95	0.95	0.95	0.95	0.95	0.95
Hourly flow rate (vph)	6	3	4	20	1	1	5	279	12	0	218	6
Pedestrians												
Lane Width (ft)												
Walking Speed (ft/s)												
Percent Blockage												
Right turn flare (veh)												
Median type								None			None	
Median storage veh)												
Upstream signal (ft)								601				
pX, platoon unblocked	0.95	0.95		0.95	0.95	0.95				0.95		
vC, conflicting volume	518	522	221	522	519	285	224			291		
vC1, stage 1 conf vol												
vC2, stage 2 conf vol												
vCu, unblocked vol	469	473	221	473	470	224	224			230		
tC, single (s)	7.1	6.5	6.2	7.1	6.5	6.2	4.1			4.1		
tC, 2 stage (s)												
tF (s)	3.5	4.0	3.3	3.5	4.0	3.3	2.2			2.2		
p0 queue free %	99	99	99	96	100	100	100			100		
cM capacity (veh/h)	478	464	819	471	466	777	1344			1274		

Direction, Lane #	EB 1	WB 1	NB 1	SB 1
Volume Total	14	22	296	224
Volume Left	6	20	5	0
Volume Right	4	1	12	6
cSH	544	480	1344	1274
Volume to Capacity	0.03	0.05	0.00	0.00
Queue Length 95th (ft)	2	4	0	0
Control Delay (s)	11.8	12.9	0.2	0.0
Lane LOS	B	B	A	
Approach Delay (s)	11.8	12.9	0.2	0.0
Approach LOS	B	B		

Intersection Summary			
Average Delay	0.9		
Intersection Capacity Utilization	28.6%	ICU Level of Service	A
Analysis Period (min)	15		

Movement	EBL	EBT	EBR	WBL	WBT	WBR	NBL	NBT	NBR	SBL	SBT	SBR
Lane Configurations												
Volume (veh/h)	7	0	34	3	10	1	9	273	7	0	190	39
Sign Control		Stop			Stop			Free			Free	
Grade		0%			0%			0%			0%	
Peak Hour Factor	0.97	0.97	0.97	0.97	0.97	0.97	0.97	0.97	0.97	0.97	0.97	0.97
Hourly flow rate (vph)	7	0	35	3	10	1	9	281	7	0	196	40
Pedestrians												
Lane Width (ft)												
Walking Speed (ft/s)												
Percent Blockage												
Right turn flare (veh)												
Median type								None			None	
Median storage veh)												
Upstream signal (ft)								300				
pX, platoon unblocked	0.87	0.87		0.87	0.87	0.87				0.87		
vC, conflicting volume	526	523	216	555	540	285	236			289		
vC1, stage 1 conf vol												
vC2, stage 2 conf vol												
vCu, unblocked vol	381	378	216	414	397	105	236			109		
tC, single (s)	7.1	6.5	6.2	7.1	6.5	6.2	4.1			4.1		
tC, 2 stage (s)												
tF (s)	3.5	4.0	3.3	3.5	4.0	3.3	2.2			2.2		
p0 queue free %	99	100	96	99	98	100	99			100		
cM capacity (veh/h)	491	479	824	455	467	827	1331			1290		

Direction, Lane #	EB 1	WB 1	NB 1	SB 1
Volume Total	42	14	298	236
Volume Left	7	3	9	0
Volume Right	35	1	7	40
cSH	738	479	1331	1290
Volume to Capacity	0.06	0.03	0.01	0.00
Queue Length 95th (ft)	5	2	1	0
Control Delay (s)	10.2	12.7	0.3	0.0
Lane LOS	B	B	A	
Approach Delay (s)	10.2	12.7	0.3	0.0
Approach LOS	B	B		

Intersection Summary			
Average Delay	1.2		
Intersection Capacity Utilization	32.1%	ICU Level of Service	A
Analysis Period (min)	15		

Lane Group	EBL	EBT	EBR	WBL	WBT	NBL	NBT	SBL	SBT
Lane Group Flow (vph)	158	495	65	193	483	140	353	24	226
v/c Ratio	0.25	0.48	0.19	0.34	0.48	0.32	0.50	0.06	0.35
Control Delay	13.1	19.4	12.8	19.8	33.4	26.3	24.8	28.6	37.0
Queue Delay	0.0	0.0	0.0	0.0	0.0	0.0	0.0	0.0	0.0
Total Delay	13.1	19.4	12.8	19.8	33.4	26.3	24.8	28.6	37.0
Queue Length 50th (ft)	46	80	2	75	137	62	61	11	63
Queue Length 95th (ft)	97	138	42	146	227	125	112	35	116
Internal Link Dist (ft)		1441			531		229		156
Turn Bay Length (ft)	130			95		155		130	
Base Capacity (vph)	946	2362	964	751	2440	672	1737	524	1743
Starvation Cap Reductn	0	0	0	0	0	0	0	0	0
Spillback Cap Reductn	0	0	0	0	0	0	0	0	0
Storage Cap Reductn	0	0	0	0	0	0	0	0	0
Reduced v/c Ratio	0.17	0.21	0.07	0.26	0.20	0.21	0.20	0.05	0.13

Intersection Summary

Movement	EBL	EBT	EBR	WBL	WBT	WBR	NBL	NBT	NBR	SBL	SBT	SBR
Lane Configurations												
Volume (vph)	144	450	59	176	418	22	127	176	146	22	167	38
Ideal Flow (vphpl)	1900	1900	1900	1900	1900	1900	1900	1900	1900	1900	1900	1900
Total Lost time (s)	3.0	3.0	5.0	3.0	3.0		3.0	3.0		3.0	3.0	
Lane Util. Factor	1.00	0.95	1.00	1.00	0.95		1.00	0.95		1.00	0.95	
Frt	1.00	1.00	0.85	1.00	0.99		1.00	0.93		1.00	0.97	
Flt Protected	0.95	1.00	1.00	0.95	1.00		0.95	1.00		0.95	1.00	
Satd. Flow (prot)	1770	3539	1583	1770	3513		1770	3299		1770	3441	
Flt Permitted	0.44	1.00	1.00	0.47	1.00		0.61	1.00		0.54	1.00	
Satd. Flow (perm)	824	3539	1583	877	3513		1138	3299		1007	3441	
Peak-hour factor, PHF	0.91	0.91	0.91	0.91	0.91	0.91	0.91	0.91	0.91	0.91	0.91	0.91
Adj. Flow (vph)	158	495	65	193	459	24	140	193	160	24	184	42
RTOR Reduction (vph)	0	0	50	0	1	0	0	74	0	0	10	0
Lane Group Flow (vph)	158	495	15	193	482	0	140	279	0	24	216	0
Turn Type	custom	NA	custom	custom	NA		custom	NA		custom	NA	
Protected Phases	1 2	2 4		1 3	3 4		5 6	6 8		5 7	7 8	
Permitted Phases	4		4	4			8			8		
Actuated Green, G (s)	45.1	27.7	18.7	41.3	26.9		28.1	17.8		25.6	18.3	
Effective Green, g (s)	45.1	27.7	18.7	41.3	26.9		28.1	17.8		25.6	18.3	
Actuated g/C Ratio	0.44	0.27	0.18	0.40	0.26		0.27	0.17		0.25	0.18	
Clearance Time (s)			5.0									
Vehicle Extension (s)			3.0									
Lane Grp Cap (vph)	603	951	287	547	917		405	570		346	611	
v/s Ratio Prot	0.07	c0.14		c0.08	c0.14		c0.05	c0.08		0.01	c0.06	
v/s Ratio Perm	0.05		0.01	0.06			0.04			0.01		
v/c Ratio	0.26	0.52	0.05	0.35	0.53		0.35	0.49		0.07	0.35	
Uniform Delay, d1	17.9	32.1	34.9	20.8	32.6		29.6	38.5		29.5	37.2	
Progression Factor	1.00	1.00	1.00	1.00	1.00		1.00	1.00		1.00	1.00	
Incremental Delay, d2	0.2	0.5	0.1	0.4	0.5		0.5	0.7		0.1	0.4	
Delay (s)	18.2	32.6	35.0	21.2	33.2		30.1	39.2		29.6	37.6	
Level of Service	B	C	C	C	C		C	D		C	D	
Approach Delay (s)		29.6			29.8			36.6			36.8	
Approach LOS		C			C			D			D	

Intersection Summary			
HCM Average Control Delay	32.1	HCM Level of Service	C
HCM Volume to Capacity ratio	0.44		
Actuated Cycle Length (s)	103.1	Sum of lost time (s)	18.0
Intersection Capacity Utilization	49.2%	ICU Level of Service	A
Analysis Period (min)	15		
c Critical Lane Group			

Lane Group	EBL	EBT	WBT	SBL
Lane Group Flow (vph)	244	487	591	140
v/c Ratio	1.02	0.37	0.45	0.16
Control Delay	93.5	20.7	21.6	9.9
Queue Delay	0.0	0.0	0.0	0.0
Total Delay	93.5	20.7	21.6	9.9
Queue Length 50th (ft)	~140	103	128	24
Queue Length 95th (ft)	#289	140	170	74
Internal Link Dist (ft)		531	201	216
Turn Bay Length (ft)	75			
Base Capacity (vph)	639	3539	3518	880
Starvation Cap Reductn	0	0	0	0
Spillback Cap Reductn	0	0	0	0
Storage Cap Reductn	0	0	0	0
Reduced v/c Ratio	0.38	0.14	0.17	0.16

Intersection Summary

~ Volume exceeds capacity, queue is theoretically infinite.
Queue shown is maximum after two cycles.

95th percentile volume exceeds capacity, queue may be longer.
Queue shown is maximum after two cycles.

Movement	EBL	EBT	WBT	WBR	SBL	SBR
Lane Configurations						
Volume (vph)	229	458	535	21	38	94
Ideal Flow (vphpl)	1900	1900	1900	1900	1900	1900
Total Lost time (s)	5.0	5.0	5.0		5.0	
Lane Util. Factor	1.00	0.95	0.95		1.00	
Frt	1.00	1.00	0.99		0.90	
Flt Protected	0.95	1.00	1.00		0.99	
Satd. Flow (prot)	1770	3539	3519		1659	
Flt Permitted	0.34	1.00	1.00		0.99	
Satd. Flow (perm)	638	3539	3519		1659	
Peak-hour factor, PHF	0.94	0.94	0.94	0.94	0.94	0.94
Adj. Flow (vph)	244	487	569	22	40	100
RTOR Reduction (vph)	0	0	3	0	25	0
Lane Group Flow (vph)	244	487	588	0	115	0
Turn Type	Perm	NA	NA		NA	
Protected Phases		4	8		6	
Permitted Phases	4					
Actuated Green, G (s)	33.8	33.8	33.8		46.5	
Effective Green, g (s)	33.8	33.8	33.8		46.5	
Actuated g/C Ratio	0.37	0.37	0.37		0.51	
Clearance Time (s)	5.0	5.0	5.0		5.0	
Vehicle Extension (s)	3.0	3.0	3.0		3.0	
Lane Grp Cap (vph)	239	1325	1317		854	
v/s Ratio Prot		0.14	0.17		c0.07	
v/s Ratio Perm	c0.38					
v/c Ratio	1.02	0.37	0.45		0.13	
Uniform Delay, d1	28.2	20.5	21.2		11.4	
Progression Factor	1.00	1.00	1.00		1.00	
Incremental Delay, d2	63.7	0.2	0.2		0.3	
Delay (s)	92.0	20.7	21.5		11.7	
Level of Service	F	C	C		B	
Approach Delay (s)		44.5	21.5		11.7	
Approach LOS		D	C		B	

Intersection Summary			
HCM Average Control Delay	32.0	HCM Level of Service	C
HCM Volume to Capacity ratio	0.51		
Actuated Cycle Length (s)	90.3	Sum of lost time (s)	10.0
Intersection Capacity Utilization	48.5%	ICU Level of Service	A
Analysis Period (min)	15		
c Critical Lane Group			

Queues
11: US-1 & SW 184th St.

2/18/2015

Lane Group	EBL	EBT	EBR	WBL	WBT	WBR	NBL	NBT	NBR	SBL	SBT	SBR
Lane Group Flow (vph)	316	446	117	403	502	19	136	1713	228	207	2060	323
v/c Ratio	0.75	0.81	0.31	0.91	0.48	0.03	0.76	0.77	0.20	0.86	0.85	0.18
Control Delay	73.7	76.0	30.6	66.1	52.2	16.3	57.9	37.8	5.6	68.5	38.5	5.9
Queue Delay	0.0	0.0	0.0	0.0	0.0	0.0	0.0	0.0	0.0	0.0	0.0	0.0
Total Delay	73.7	76.0	30.6	66.1	52.2	16.3	57.9	37.8	5.6	68.5	38.5	5.9
Queue Length 50th (ft)	155	158	54	323	157	3	78	527	47	146	653	35
Queue Length 95th (ft)	208	#210	116	#498	199	22	#185	595	79	#284	730	57
Internal Link Dist (ft)		484			394			469			768	
Turn Bay Length (ft)	200		200	286		200	160		200	130		200
Base Capacity (vph)	479	568	387	486	1138	579	189	2237	1170	262	2449	1865
Starvation Cap Reductn	0	0	0	0	0	0	0	0	0	0	0	0
Spillback Cap Reductn	0	0	0	0	0	0	0	0	0	0	0	0
Storage Cap Reductn	0	0	0	0	0	0	0	0	0	0	0	0
Reduced v/c Ratio	0.66	0.79	0.30	0.83	0.44	0.03	0.72	0.77	0.19	0.79	0.84	0.17

Intersection Summary

95th percentile volume exceeds capacity, queue may be longer.
Queue shown is maximum after two cycles.

Movement	EBL	EBT	EBR	WBL	WBT	WBR	NBL	NBT	NBR	SBL	SBT	SBR
Lane Configurations												
Volume (vph)	297	419	110	379	472	18	128	1610	214	195	1936	304
Ideal Flow (vphpl)	1900	1900	1900	1900	1900	1900	1900	1900	1900	1900	1900	1900
Total Lost time (s)	5.0	5.0	3.0	5.0	5.0	3.0	3.0	5.0	5.0	3.0	5.0	5.0
Lane Util. Factor	0.97	0.91	1.00	1.00	0.91	1.00	1.00	0.91	1.00	1.00	0.91	0.88
Frt	1.00	1.00	0.85	1.00	1.00	0.85	1.00	1.00	0.85	1.00	1.00	0.85
Flt Protected	0.95	1.00	1.00	0.95	1.00	1.00	0.95	1.00	1.00	0.95	1.00	1.00
Satd. Flow (prot)	3433	5085	1583	1770	5085	1583	1770	5085	1583	1770	5085	2787
Flt Permitted	0.95	1.00	1.00	0.20	1.00	1.00	0.06	1.00	1.00	0.06	1.00	1.00
Satd. Flow (perm)	3433	5085	1583	363	5085	1583	118	5085	1583	113	5085	2787
Peak-hour factor, PHF	0.94	0.94	0.94	0.94	0.94	0.94	0.94	0.94	0.94	0.94	0.94	0.94
Adj. Flow (vph)	316	446	117	403	502	19	136	1713	228	207	2060	323
RTOR Reduction (vph)	0	0	41	0	0	10	0	0	26	0	0	62
Lane Group Flow (vph)	316	446	76	403	502	9	136	1713	202	207	2060	261
Turn Type	Prot	NA	pm+ov	pm+pt	NA	pm+ov	pm+pt	NA	pm+ov	pm+pt	NA	pm+ov
Protected Phases	7	4	5	3	8	1	5	2	3	1	6	7
Permitted Phases			4	8		8	2		2	6		6
Actuated Green, G (s)	17.5	15.5	25.7	52.2	29.7	45.0	73.4	63.2	94.9	81.5	68.3	85.8
Effective Green, g (s)	17.5	15.5	25.7	52.2	29.7	45.0	73.4	63.2	94.9	81.5	68.3	85.8
Actuated g/C Ratio	0.12	0.11	0.18	0.36	0.21	0.31	0.51	0.44	0.66	0.57	0.48	0.60
Clearance Time (s)	5.0	5.0	3.0	5.0	5.0	3.0	3.0	5.0	5.0	3.0	5.0	5.0
Vehicle Extension (s)	3.0	3.0	3.0	3.0	3.0	3.0	3.0	3.0	3.0	3.0	3.0	3.0
Lane Grp Cap (vph)	418	548	283	442	1051	496	178	2236	1100	241	2417	1761
v/s Ratio Prot	0.09	0.09	0.02	c0.20	0.10	0.00	0.05	0.34	0.04	c0.09	0.41	0.02
v/s Ratio Perm			0.03	c0.13		0.00	0.34		0.09	c0.40		0.08
v/c Ratio	0.76	0.81	0.27	0.91	0.48	0.02	0.76	0.77	0.18	0.86	0.85	0.15
Uniform Delay, d1	61.0	62.7	50.9	40.4	50.2	34.1	33.4	34.0	9.4	42.6	33.3	12.8
Progression Factor	1.00	1.00	1.00	1.00	1.00	1.00	1.00	1.00	1.00	1.00	1.00	1.00
Incremental Delay, d2	7.6	9.0	0.5	22.9	0.3	0.0	17.5	2.6	0.1	24.8	3.1	0.0
Delay (s)	68.6	71.7	51.4	63.2	50.5	34.1	50.9	36.6	9.5	67.4	36.4	12.8
Level of Service	E	E	D	E	D	C	D	D	A	E	D	B
Approach Delay (s)		67.9			55.7			34.5			35.9	
Approach LOS		E			E			C			D	

Intersection Summary			
HCM Average Control Delay	42.7	HCM Level of Service	D
HCM Volume to Capacity ratio	0.85		
Actuated Cycle Length (s)	143.7	Sum of lost time (s)	8.0
Intersection Capacity Utilization	89.4%	ICU Level of Service	E
Analysis Period (min)	15		
c Critical Lane Group			

Movement	EBL	EBT	EBR	WBL	WBT	WBR	NBL	NBT	NBR	SBL	SBT	SBR
Lane Configurations												
Volume (vph)	297	419	110	379	472	18	128	1610	214	195	1936	304
Movement Number	7	4	14	3	8	18	5	2	12	1	6	16
Initial Queue, veh	0	0	0	0	0	0	0	0	0	0	0	0
Ped-Bike Adj. Factor (A_pbT)	1.00		1.00	1.00		1.00	1.00		1.00	1.00		1.00
Parking, Bus Adj. Factors	1.00	1.00	1.00	1.00	1.00	1.00	1.00	1.00	1.00	1.00	1.00	1.00
Adj. Sat. Flow Rate, veh/h/ln	1863	1863	1863	1863	1863	1863	1863	1863	1863	1863	1863	1863
Lanes	2	3	1	1	3	1	1	3	1	1	3	2
Lane Assignment												
Capacity, veh/h	378	560	260	435	1026	435	182	2440	1079	245	2535	1695
Proportion Arriving On Green	0.11	0.11	0.11	0.20	0.20	0.20	0.05	0.48	0.48	0.07	0.50	0.50
Movement Delay, s/veh	66.4	64.4	51.3	53.5	47.3	35.4	37.9	28.8	8.3	39.2	30.0	11.6
Movement LOS	E	E	D	D	D	D	D	C	A	D	C	B
Approach Volume, veh/h		879			924			2077			2590	
Approach Delay, s/veh		63.4			49.8			27.2			28.5	
Approach LOS		E			D			C			C	

Timer:	1	2	3	4	5	6	7	8
Assigned Phase	1	2	3	4	5	6	7	8
Case No	1.1	3.0	1.1	3.0	1.1	3.0	2.0	3.0
Phase Duration (G+Y+Rc), s	12.71	68.76	31.77	19.64	10.22	71.25	19.59	31.82
Change Period (Y+Rc), s	3.00	5.00	5.00	5.00	3.00	5.00	5.00	5.00
Max. Allowable Headway (MAH), s	4.00	3.92	4.00	3.92	4.00	3.92	4.00	3.92
Maximum Green Setting (Gmax), s	17.00	63.00	36.00	16.00	11.00	69.00	20.00	32.00
Max. Queue Clearance Time (g_c+I1), s	9.34	37.10	25.71	13.36	7.15	47.35	13.96	13.62
Green Extension Time (g_e), s	0.37	22.91	1.07	1.28	0.12	18.89	0.63	4.29
Probability of Phase Call (p_c)	1.000	1.000	1.000	1.000	0.993	1.000	1.000	1.000
Probability of Max Out (p_x)	0.073	0.849	0.052	1.000	1.000	0.877	0.283	0.042

Left-Turn Movement Data				
Assigned Movement	1	3	5	7
Mvmt. Sat Flow, veh/h	1774.04	1774.04	1774.04	3441.64

Through Movement Data				
Assigned Movement	2	4	6	8
Mvmt. Sat Flow, veh/h	5085.29	5085.29	5085.29	5085.29

Right-Turn Movement Data				
Assigned Movement	12	14	16	18
Mvmt. Sat Flow, veh/h	1583.33	1583.33	2786.67	1583.33

Left Lane Group Data								
Assigned Movement	1	0	3	0	5	0	7	0
Lane Assignment	L (Pr/Pm)		L (Pr/Pm)		L (Pr/Pm)		L (Prot)	
Lanes in Group	1	0	1	0	1	0	2	0
Group Volume (v), veh/h	207.4	0.0	403.2	0.0	136.2	0.0	316.0	0.0
Group Sat. Flow (s), veh/h/ln	1774.0	0.0	1774.0	0.0	1774.0	0.0	1720.8	0.0
Queue Serve Time (g_s), s	7.3	0.0	23.7	0.0	5.1	0.0	12.0	0.0
Cycle Queue Clear Time (g_c), s	7.3	0.0	23.7	0.0	5.1	0.0	12.0	0.0

Perm LT Sat Flow Rate (s_l), veh/h/ln	283.7	0.0	940.3	0.0	202.2	0.0	0.0	0.0
Shared LT Sat Flow (s_sh), veh/h/ln	0.0	0.0	0.0	0.0	0.0	0.0	0.0	0.0
Perm LT Eff. Green (g_p), s	67.7	0.0	28.8	0.0	63.8	0.0	0.0	0.0
Perm LT Serve Time (g_u), s	28.7	0.0	3.3	0.0	20.9	0.0	0.0	0.0
Perm LT Que Serve Time (g_ps), s	28.7	0.0	3.3	0.0	20.9	0.0	0.0	0.0
Time to First Blk (g_f), s	0.0	0.0	0.0	0.0	0.0	0.0	0.0	0.0
Serve Time pre Blk (g_fs), s	0.0	0.0	0.0	0.0	0.0	0.0	0.0	0.0
Proportion LT Inside Lane (P_L)	1.000	0.000	1.000	0.000	1.000	0.000	1.000	0.000
Lane Group Capacity (c), veh/h	245.0	0.0	434.8	0.0	182.4	0.0	377.9	0.0
Volume-to-Capacity Ratio (X)	0.847	0.000	0.927	0.000	0.747	0.000	0.836	0.000
Available Capacity (c_a), veh/h	342.3	0.0	558.0	0.0	232.9	0.0	518.0	0.0
Upstream Filter Factor (I)	1.000	0.000	1.000	0.000	1.000	0.000	1.000	0.000
Uniform Delay (d1), s/veh	26.1	0.0	34.6	0.0	28.5	0.0	58.0	0.0
Incremental Delay (d2), s/veh	13.0	0.0	18.9	0.0	9.4	0.0	8.5	0.0
Initial Queue Delay (d3), s/veh	0.0	0.0	0.0	0.0	0.0	0.0	0.0	0.0
Control Delay (d), s/veh	39.2	0.0	53.5	0.0	37.9	0.0	66.4	0.0
First-Term Queue (Q1), veh/ln	3.9	0.0	10.2	0.0	2.4	0.0	5.2	0.0
Second-Term Queue (Q2), veh/ln	0.9	0.0	2.3	0.0	0.5	0.0	0.4	0.0
Third-Term Queue (Q3), veh/ln	0.0	0.0	0.0	0.0	0.0	0.0	0.0	0.0
Percentile bk-of-que factor (f_B%)	1.000	0.000	1.000	0.000	1.000	0.000	1.000	0.000
Percentile Back of Queue (Q%), veh/ln	4.8	0.0	12.5	0.0	2.9	0.0	5.7	0.0
Percentile Storage Ratio (RQ%)	0.94	0.00	1.11	0.00	0.46	0.00	0.72	0.00
Initial Queue (Qb), veh	0.0	0.0	0.0	0.0	0.0	0.0	0.0	0.0
Final (Residual) Queue (Qe), veh	0.0	0.0	0.0	0.0	0.0	0.0	0.0	0.0
Saturated Delay (ds), s/veh	0.0	0.0	0.0	0.0	0.0	0.0	0.0	0.0
Saturated Queue (Qs), veh	0.0	0.0	0.0	0.0	0.0	0.0	0.0	0.0
Saturated Capacity (cs), veh/h	0.0	0.0	0.0	0.0	0.0	0.0	0.0	0.0
Initial Queue Clear Time (tc), h	0.0	0.0	0.0	0.0	0.0	0.0	0.0	0.0
Middle Lane Group Data								
Assigned Movement	0	2	0	4	0	6	0	8
Lane Assignment		T		T		T		T
Lanes in Group	0	3	0	3	0	3	0	3
Group Volume (v), veh/h	0.0	1712.8	0.0	445.7	0.0	2059.6	0.0	502.1
Group Sat. Flow (s), veh/h/ln	0.0	1695.1	0.0	1695.1	0.0	1695.1	0.0	1695.1
Queue Serve Time (g_s), s	0.0	35.1	0.0	11.4	0.0	45.4	0.0	11.6
Cycle Queue Clear Time (g_c), s	0.0	35.1	0.0	11.4	0.0	45.4	0.0	11.6
Lane Group Capacity (c), veh/h	0.0	2440.0	0.0	560.2	0.0	2535.3	0.0	1026.5
Volume-to-Capacity Ratio (X)	0.000	0.702	0.000	0.796	0.000	0.812	0.000	0.489
Available Capacity (c_a), veh/h	0.0	2440.0	0.0	612.4	0.0	2640.8	0.0	1224.7
Upstream Filter Factor (I)	0.000	1.000	0.000	1.000	0.000	1.000	0.000	1.000
Uniform Delay (d1), s/veh	0.0	27.1	0.0	57.7	0.0	28.1	0.0	47.0
Incremental Delay (d2), s/veh	0.0	1.7	0.0	6.7	0.0	2.0	0.0	0.4
Initial Queue Delay (d3), s/veh	0.0	0.0	0.0	0.0	0.0	0.0	0.0	0.0
Control Delay (d), s/veh	0.0	28.8	0.0	64.4	0.0	30.0	0.0	47.3
First-Term Queue (Q1), veh/ln	0.0	14.0	0.0	4.9	0.0	18.0	0.0	4.9
Second-Term Queue (Q2), veh/ln	0.0	0.4	0.0	0.3	0.0	0.5	0.0	0.0
Third-Term Queue (Q3), veh/ln	0.0	0.0	0.0	0.0	0.0	0.0	0.0	0.0
Percentile bk-of-que factor (f_B%)	0.000	1.000	0.000	1.000	0.000	1.000	0.000	1.000
Percentile Back of Queue (Q%), veh/ln	0.0	14.4	0.0	5.2	0.0	18.5	0.0	5.0
Percentile Storage Ratio (RQ%)	0.00	0.85	0.00	0.29	0.00	0.67	0.00	0.36

Initial Queue (Qb), veh	0.0	0.0	0.0	0.0	0.0	0.0	0.0	0.0
Final (Residual) Queue (Qe), veh	0.0	0.0	0.0	0.0	0.0	0.0	0.0	0.0
Saturated Delay (ds), s/veh	0.0	0.0	0.0	0.0	0.0	0.0	0.0	0.0
Saturated Queue (Qs), veh	0.0	0.0	0.0	0.0	0.0	0.0	0.0	0.0
Saturated Capacity (cs), veh/h	0.0	0.0	0.0	0.0	0.0	0.0	0.0	0.0
Initial Queue Clear Time (tc), h	0.0	0.0	0.0	0.0	0.0	0.0	0.0	0.0

Right Lane Group Data								
Assigned Movement	0	12	0	14	0	16	0	18
Lane Assignment		R		R		R		R
Lanes in Group	0	1	0	1	0	2	0	1
Group Volume (v), veh/h	0.0	227.7	0.0	117.0	0.0	323.4	0.0	19.1
Group Sat. Flow (s), veh/h/ln	0.0	1583.3	0.0	1583.3	0.0	1393.3	0.0	1583.3
Queue Serve Time (g_s), s	0.0	7.1	0.0	8.9	0.0	6.8	0.0	1.2
Cycle Queue Clear Time (g_c), s	0.0	7.1	0.0	8.9	0.0	6.8	0.0	1.2
Prot RT Sat Flow Rate (s_R), veh/h/ln	0.0	1583.3	0.0	1583.3	0.0	1393.3	0.0	1583.3
Prot RT Eff. Green (g_R), s	0.0	26.8	0.0	7.2	0.0	14.6	0.0	9.7
Proportion RT Outside Lane (P_R)	0.000	1.000	0.000	1.000	0.000	1.000	0.000	1.000
Lane Group Capacity (c), veh/h	0.0	1078.7	0.0	260.4	0.0	1695.3	0.0	435.3
Volume-to-Capacity Ratio (X)	0.000	0.211	0.000	0.449	0.000	0.191	0.000	0.044
Available Capacity (c_a), veh/h	0.0	1078.7	0.0	276.7	0.0	1753.0	0.0	497.0
Upstream Filter Factor (I)	0.000	1.000	0.000	1.000	0.000	1.000	0.000	1.000
Uniform Delay (d1), s/veh	0.0	7.9	0.0	50.1	0.0	11.5	0.0	35.4
Incremental Delay (d2), s/veh	0.0	0.4	0.0	1.2	0.0	0.1	0.0	0.0
Initial Queue Delay (d3), s/veh	0.0	0.0	0.0	0.0	0.0	0.0	0.0	0.0
Control Delay (d), s/veh	0.0	8.3	0.0	51.3	0.0	11.6	0.0	35.4
First-Term Queue (Q1), veh/ln	0.0	2.4	0.0	3.5	0.0	2.1	0.0	0.5
Second-Term Queue (Q2), veh/ln	0.0	0.1	0.0	0.1	0.0	0.0	0.0	0.0
Third-Term Queue (Q3), veh/ln	0.0	0.0	0.0	0.0	0.0	0.0	0.0	0.0
Percentile bk-of-que factor (f_B%)	0.000	1.000	0.000	1.000	0.000	1.000	0.000	1.000
Percentile Back of Queue (Q%), veh/ln	0.0	2.5	0.0	3.6	0.0	2.1	0.0	0.5
Percentile Storage Ratio (RQ%)	0.00	0.32	0.00	0.46	0.00	0.27	0.00	0.06
Initial Queue (Qb), veh	0.0	0.0	0.0	0.0	0.0	0.0	0.0	0.0
Final (Residual) Queue (Qe), veh	0.0	0.0	0.0	0.0	0.0	0.0	0.0	0.0
Saturated Delay (ds), s/veh	0.0	0.0	0.0	0.0	0.0	0.0	0.0	0.0
Saturated Queue (Qs), veh	0.0	0.0	0.0	0.0	0.0	0.0	0.0	0.0
Saturated Capacity (cs), veh/h	0.0	0.0	0.0	0.0	0.0	0.0	0.0	0.0
Initial Queue Clear Time (tc), h	0.0	0.0	0.0	0.0	0.0	0.0	0.0	0.0

Intersection Summary	
HCM Average Control Delay	35.8
HCM Level of Service	D

Lane Group	EBT	WBT	NET
Lane Group Flow (vph)	45	42	2304
v/c Ratio	0.56	0.38	0.50
Control Delay	119.0	84.9	2.5
Queue Delay	0.0	0.0	0.0
Total Delay	119.0	84.9	2.5
Queue Length 50th (ft)	60	45	172
Queue Length 95th (ft)	113	93	243
Internal Link Dist (ft)	48	206	515
Turn Bay Length (ft)			
Base Capacity (vph)	180	245	4610
Starvation Cap Reductn	0	0	0
Spillback Cap Reductn	0	0	0
Storage Cap Reductn	0	0	0
Reduced v/c Ratio	0.25	0.17	0.50

Intersection Summary

Movement	EBL	EBT	EBR	WBL	WBT	WBR	NEL	NET	NER	SWL	SWT	SWR
Lane Configurations												
Volume (vph)	37	6	0	0	28	12	64	2091	34	0	0	0
Ideal Flow (vphpl)	1900	1900	1900	1900	1900	1900	1900	1900	1900	1900	1900	1900
Total Lost time (s)		5.0			5.0			5.0				
Lane Util. Factor		1.00			1.00			0.91				
Frt		1.00			0.96			1.00				
Flt Protected		0.96			1.00			1.00				
Satd. Flow (prot)		1785			1785			5066				
Flt Permitted		0.72			1.00			1.00				
Satd. Flow (perm)		1350			1785			5066				
Peak-hour factor, PHF	0.95	0.95	0.95	0.95	0.95	0.95	0.95	0.95	0.95	0.95	0.95	0.95
Adj. Flow (vph)	39	6	0	0	29	13	67	2201	36	0	0	0
RTOR Reduction (vph)	0	0	0	0	8	0	0	0	0	0	0	0
Lane Group Flow (vph)	0	45	0	0	34	0	0	2304	0	0	0	0
Turn Type	Perm	NA			NA		Split	NA				
Protected Phases		4			8		2	2				
Permitted Phases	4							2				
Actuated Green, G (s)		10.6			10.6			183.3				
Effective Green, g (s)		10.6			10.6			183.3				
Actuated g/C Ratio		0.05			0.05			0.90				
Clearance Time (s)		5.0			5.0			5.0				
Vehicle Extension (s)		3.0			3.0			3.0				
Lane Grp Cap (vph)		70			93			4554				
v/s Ratio Prot					0.02			c0.45				
v/s Ratio Perm		c0.03										
v/c Ratio		0.64			0.37			0.51				
Uniform Delay, d1		94.8			93.4			1.9				
Progression Factor		1.00			1.00			1.00				
Incremental Delay, d2		18.4			2.5			0.4				
Delay (s)		113.2			95.9			2.3				
Level of Service		F			F			A				
Approach Delay (s)		113.2			95.9			2.3			0.0	
Approach LOS		F			F			A			A	

Intersection Summary			
HCM Average Control Delay	6.0	HCM Level of Service	A
HCM Volume to Capacity ratio	0.51		
Actuated Cycle Length (s)	203.9	Sum of lost time (s)	10.0
Intersection Capacity Utilization	59.8%	ICU Level of Service	B
Analysis Period (min)	15		
c Critical Lane Group			

Movement	EBL	EBT	EBR	WBL	WBT	WBR	NEL	NET	NER	SWL	SWT	SWR
Lane Configurations												
Volume (vph)	37	6	0	0	28	12	64	2091	34	0	0	0
Movement Number	7	4	14	3	8	18	5	2	12	1	6	16
Initial Queue, veh	0	0	0	0	0	0	0	0	0	0	0	0
Ped-Bike Adj. Factor (A_pbT)	1.00		1.00	1.00		1.00	1.00		1.00	1.00		1.00
Parking, Bus Adj. Factors	1.00	1.00	1.00	1.00	1.00	1.00	1.00	1.00	1.00	1.00	1.00	1.00
Adj. Sat. Flow Rate, veh/h/ln	1863	1863	1900	1900	1863	1863	1863	1863	1863	1900	1900	1900
Lanes	0	1	0	0	1	0	0	3	0	0	0	0
Lane Assignment												
Capacity, veh/h	76	10	0	0	74	32	136	4745	79	0	0	0
Proportion Arriving On Green	0.06	0.06	0.00	0.00	0.06	0.06	0.89	0.89	0.89	0.00	0.00	0.00
Movement Delay, s/veh	100.2	0.0	0.0	0.0	0.0	95.4	3.2	2.9	2.9	0.0	0.0	0.0
Movement LOS	F					F	A	A	A			
Approach Volume, veh/h		45			42			2304			0	
Approach Delay, s/veh		100.2			95.4			3.0			0.0	
Approach LOS		F			F			A				

Timer:	1	2	3	4	5	6	7	8
Assigned Phase		2		4				8
Case No		12.0		8.0				8.0
Phase Duration (G+Y+Rc), s		188.00		17.27				17.27
Change Period (Y+Rc), s		5.00		5.00				5.00
Max. Allowable Headway (MAH), s		3.91		4.01				4.01
Maximum Green Setting (Gmax), s		183.00		27.00				27.00
Max. Queue Clearance Time (g_c+I1), s		19.53		12.19				6.71
Green Extension Time (g_e), s		15.15		0.17				0.20
Probability of Phase Call (p_c)		1.000		0.993				0.993
Probability of Max Out (p_x)		0.001		0.000				0.000

Left-Turn Movement Data				
Assigned Movement		5		7
Mvmt. Sat Flow, veh/h		152.94		766.62

Through Movement Data				
Assigned Movement		2		4				8
Mvmt. Sat Flow, veh/h		5322.76		124.32				1238.36

Right-Turn Movement Data				
Assigned Movement		12		14				18
Mvmt. Sat Flow, veh/h		89.16		0.00				530.73

Left Lane Group Data								
Assigned Movement	0	5	0	7	0	0	0	0
Lane Assignment		L+T		L+T				
Lanes in Group	0	1	0	1	0	0	0	0
Group Volume (v), veh/h	0.0	817.1	0.0	45.3	0.0	0.0	0.0	0.0
Group Sat. Flow (s), veh/h/ln	0.0	1855.1	0.0	890.9	0.0	0.0	0.0	0.0
Queue Serve Time (g_s), s	0.0	17.5	0.0	5.5	0.0	0.0	0.0	0.0
Cycle Queue Clear Time (g_c), s	0.0	17.5	0.0	10.2	0.0	0.0	0.0	0.0

Perm LT Sat Flow Rate (s_l), veh/h/ln	0.0	0.0	0.0	779.1	0.0	0.0	0.0	0.0
Shared LT Sat Flow (s_sh), veh/h/ln	0.0	0.0	0.0	920.1	0.0	0.0	0.0	0.0
Perm LT Eff. Green (g_p), s	0.0	0.0	0.0	12.3	0.0	0.0	0.0	0.0
Perm LT Serve Time (g_u), s	0.0	0.0	0.0	7.6	0.0	0.0	0.0	0.0
Perm LT Que Serve Time (g_ps), s	0.0	0.0	0.0	5.5	0.0	0.0	0.0	0.0
Time to First Blk (g_f), s	0.0	0.0	0.0	0.3	0.0	0.0	0.0	12.3
Serve Time pre Blk (g_fs), s	0.0	0.0	0.0	0.3	0.0	0.0	0.0	0.0
Proportion LT Inside Lane (P_L)	0.000	0.082	0.000	0.860	0.000	0.000	0.000	0.000
Lane Group Capacity (c), veh/h	0.0	1653.8	0.0	85.9	0.0	0.0	0.0	0.0
Volume-to-Capacity Ratio (X)	0.000	0.494	0.000	0.527	0.000	0.000	0.000	0.000
Available Capacity (c_a), veh/h	0.0	1653.8	0.0	145.6	0.0	0.0	0.0	0.0
Upstream Filter Factor (I)	0.000	1.000	0.000	1.000	0.000	0.000	0.000	0.000
Uniform Delay (d1), s/veh	0.0	2.2	0.0	95.2	0.0	0.0	0.0	0.0
Incremental Delay (d2), s/veh	0.0	1.1	0.0	4.9	0.0	0.0	0.0	0.0
Initial Queue Delay (d3), s/veh	0.0	0.0	0.0	0.0	0.0	0.0	0.0	0.0
Control Delay (d), s/veh	0.0	3.2	0.0	100.2	0.0	0.0	0.0	0.0
First-Term Queue (Q1), veh/ln	0.0	4.8	0.0	2.5	0.0	0.0	0.0	0.0
Second-Term Queue (Q2), veh/ln	0.0	0.5	0.0	0.1	0.0	0.0	0.0	0.0
Third-Term Queue (Q3), veh/ln	0.0	0.0	0.0	0.0	0.0	0.0	0.0	0.0
Percentile bk-of-que factor (f_B%)	0.000	1.000	0.000	1.000	0.000	0.000	0.000	0.000
Percentile Back of Queue (Q%), veh/ln	0.0	5.3	0.0	2.7	0.0	0.0	0.0	0.0
Percentile Storage Ratio (RQ%)	0.00	0.25	0.00	0.62	0.00	0.00	0.00	0.00
Initial Queue (Qb), veh	0.0	0.0	0.0	0.0	0.0	0.0	0.0	0.0
Final (Residual) Queue (Qe), veh	0.0	0.0	0.0	0.0	0.0	0.0	0.0	0.0
Saturated Delay (ds), s/veh	0.0	0.0	0.0	0.0	0.0	0.0	0.0	0.0
Saturated Queue (Qs), veh	0.0	0.0	0.0	0.0	0.0	0.0	0.0	0.0
Saturated Capacity (cs), veh/h	0.0	0.0	0.0	0.0	0.0	0.0	0.0	0.0
Initial Queue Clear Time (tc), h	0.0	0.0	0.0	0.0	0.0	0.0	0.0	0.0
Middle Lane Group Data								
Assigned Movement	0	2	0	4	0	0	0	8
Lane Assignment		T						
Lanes in Group	0	1	0	0	0	0	0	0
Group Volume (v), veh/h	0.0	745.6	0.0	0.0	0.0	0.0	0.0	0.0
Group Sat. Flow (s), veh/h/ln	0.0	1862.7	0.0	0.0	0.0	0.0	0.0	0.0
Queue Serve Time (g_s), s	0.0	14.9	0.0	0.0	0.0	0.0	0.0	0.0
Cycle Queue Clear Time (g_c), s	0.0	14.9	0.0	0.0	0.0	0.0	0.0	0.0
Lane Group Capacity (c), veh/h	0.0	1660.6	0.0	0.0	0.0	0.0	0.0	0.0
Volume-to-Capacity Ratio (X)	0.000	0.449	0.000	0.000	0.000	0.000	0.000	0.000
Available Capacity (c_a), veh/h	0.0	1660.6	0.0	0.0	0.0	0.0	0.0	0.0
Upstream Filter Factor (I)	0.000	1.000	0.000	0.000	0.000	0.000	0.000	0.000
Uniform Delay (d1), s/veh	0.0	2.0	0.0	0.0	0.0	0.0	0.0	0.0
Incremental Delay (d2), s/veh	0.0	0.9	0.0	0.0	0.0	0.0	0.0	0.0
Initial Queue Delay (d3), s/veh	0.0	0.0	0.0	0.0	0.0	0.0	0.0	0.0
Control Delay (d), s/veh	0.0	2.9	0.0	0.0	0.0	0.0	0.0	0.0
First-Term Queue (Q1), veh/ln	0.0	4.1	0.0	0.0	0.0	0.0	0.0	0.0
Second-Term Queue (Q2), veh/ln	0.0	0.4	0.0	0.0	0.0	0.0	0.0	0.0
Third-Term Queue (Q3), veh/ln	0.0	0.0	0.0	0.0	0.0	0.0	0.0	0.0
Percentile bk-of-que factor (f_B%)	0.000	1.000	0.000	1.000	0.000	0.000	0.000	1.000
Percentile Back of Queue (Q%), veh/ln	0.0	4.5	0.0	0.0	0.0	0.0	0.0	0.0
Percentile Storage Ratio (RQ%)	0.00	0.21	0.00	0.00	0.00	0.00	0.00	0.00

Initial Queue (Qb), veh	0.0	0.0	0.0	0.0	0.0	0.0	0.0	0.0
Final (Residual) Queue (Qe), veh	0.0	0.0	0.0	0.0	0.0	0.0	0.0	0.0
Saturated Delay (ds), s/veh	0.0	0.0	0.0	0.0	0.0	0.0	0.0	0.0
Saturated Queue (Qs), veh	0.0	0.0	0.0	0.0	0.0	0.0	0.0	0.0
Saturated Capacity (cs), veh/h	0.0	0.0	0.0	0.0	0.0	0.0	0.0	0.0
Initial Queue Clear Time (tc), h	0.0	0.0	0.0	0.0	0.0	0.0	0.0	0.0
Right Lane Group Data								
Assigned Movement	0	12	0	14	0	0	0	18
Lane Assignment		T+R						T+R
Lanes in Group	0	1	0	0	0	0	0	1
Group Volume (v), veh/h	0.0	741.4	0.0	0.0	0.0	0.0	0.0	42.1
Group Sat. Flow (s), veh/h/ln	0.0	1847.0	0.0	0.0	0.0	0.0	0.0	1769.1
Queue Serve Time (g_s), s	0.0	14.9	0.0	0.0	0.0	0.0	0.0	4.7
Cycle Queue Clear Time (g_c), s	0.0	14.9	0.0	0.0	0.0	0.0	0.0	4.7
Prot RT Sat Flow Rate (s_R), veh/h/ln	0.0	0.0	0.0	0.0	0.0	0.0	0.0	0.0
Prot RT Eff. Green (g_R), s	0.0	0.0	0.0	0.0	0.0	0.0	0.0	0.0
Proportion RT Outside Lane (P_R)	0.000	0.048	0.000	0.000	0.000	0.000	0.000	0.300
Lane Group Capacity (c), veh/h	0.0	1646.6	0.0	0.0	0.0	0.0	0.0	105.8
Volume-to-Capacity Ratio (X)	0.000	0.450	0.000	0.000	0.000	0.000	0.000	0.398
Available Capacity (c_a), veh/h	0.0	1646.6	0.0	0.0	0.0	0.0	0.0	232.7
Upstream Filter Factor (I)	0.000	1.000	0.000	0.000	0.000	0.000	0.000	1.000
Uniform Delay (d1), s/veh	0.0	2.0	0.0	0.0	0.0	0.0	0.0	92.9
Incremental Delay (d2), s/veh	0.0	0.9	0.0	0.0	0.0	0.0	0.0	2.4
Initial Queue Delay (d3), s/veh	0.0	0.0	0.0	0.0	0.0	0.0	0.0	0.0
Control Delay (d), s/veh	0.0	2.9	0.0	0.0	0.0	0.0	0.0	95.4
First-Term Queue (Q1), veh/ln	0.0	4.1	0.0	0.0	0.0	0.0	0.0	2.2
Second-Term Queue (Q2), veh/ln	0.0	0.4	0.0	0.0	0.0	0.0	0.0	0.1
Third-Term Queue (Q3), veh/ln	0.0	0.0	0.0	0.0	0.0	0.0	0.0	0.0
Percentile bk-of-que factor (f_B%)	0.000	1.000	0.000	1.000	0.000	0.000	0.000	1.000
Percentile Back of Queue (Q%), veh/ln	0.0	4.5	0.0	0.0	0.0	0.0	0.0	2.3
Percentile Storage Ratio (RQ%)	0.00	0.21	0.00	0.00	0.00	0.00	0.00	0.26
Initial Queue (Qb), veh	0.0	0.0	0.0	0.0	0.0	0.0	0.0	0.0
Final (Residual) Queue (Qe), veh	0.0	0.0	0.0	0.0	0.0	0.0	0.0	0.0
Saturated Delay (ds), s/veh	0.0	0.0	0.0	0.0	0.0	0.0	0.0	0.0
Saturated Queue (Qs), veh	0.0	0.0	0.0	0.0	0.0	0.0	0.0	0.0
Saturated Capacity (cs), veh/h	0.0	0.0	0.0	0.0	0.0	0.0	0.0	0.0
Initial Queue Clear Time (tc), h	0.0	0.0	0.0	0.0	0.0	0.0	0.0	0.0
Intersection Summary								
HCM Average Control Delay		6.5						
HCM Level of Service		A						

Lane Group	EBT	WBT	NET
Lane Group Flow (vph)	4	102	2570
v/c Ratio	0.02	0.54	0.62
Control Delay	42.8	58.1	5.2
Queue Delay	0.0	0.0	0.7
Total Delay	42.8	58.1	5.9
Queue Length 50th (ft)	3	74	208
Queue Length 95th (ft)	12	118	289
Internal Link Dist (ft)	164	208	477
Turn Bay Length (ft)			
Base Capacity (vph)	295	295	4118
Starvation Cap Reductn	0	0	1064
Spillback Cap Reductn	0	0	0
Storage Cap Reductn	0	0	0
Reduced v/c Ratio	0.01	0.35	0.84

Intersection Summary

Movement	EBL	EBT	EBR	WBL	WBT	WBR	NEL	NET	NER	SWL	SWT	SWR
Lane Configurations												
Volume (vph)	0	4	0	0	91	0	2	2274	12	0	0	0
Ideal Flow (vphpl)	1900	1900	1900	1900	1900	1900	1900	1900	1900	1900	1900	1900
Total Lost time (s)		5.0			5.0			5.0				
Lane Util. Factor		1.00			1.00			0.91				
Frt		1.00			1.00			1.00				
Flt Protected		1.00			1.00			1.00				
Satd. Flow (prot)		1863			1863			5081				
Flt Permitted		1.00			1.00			1.00				
Satd. Flow (perm)		1863			1863			5081				
Peak-hour factor, PHF	0.89	0.89	0.89	0.89	0.89	0.89	0.89	0.89	0.89	0.89	0.89	0.89
Adj. Flow (vph)	0	4	0	0	102	0	2	2555	13	0	0	0
RTOR Reduction (vph)	0	0	0	0	0	0	0	0	0	0	0	0
Lane Group Flow (vph)	0	4	0	0	102	0	0	2570	0	0	0	0
Turn Type	Perm	NA			NA		Perm	NA				
Protected Phases		4			8			2				
Permitted Phases	4						2					
Actuated Green, G (s)		11.5			11.5			92.2				
Effective Green, g (s)		11.5			11.5			92.2				
Actuated g/C Ratio		0.10			0.10			0.81				
Clearance Time (s)		5.0			5.0			5.0				
Vehicle Extension (s)		3.0			3.0			3.0				
Lane Grp Cap (vph)		188			188			4120				
v/s Ratio Prot		0.00			c0.05							
v/s Ratio Perm								0.51				
v/c Ratio		0.02			0.54			0.62				
Uniform Delay, d1		46.0			48.6			4.1				
Progression Factor		1.00			1.00			1.00				
Incremental Delay, d2		0.0			3.2			0.7				
Delay (s)		46.1			51.8			4.8				
Level of Service		D			D			A				
Approach Delay (s)		46.1			51.8			4.8			0.0	
Approach LOS		D			D			A			A	

Intersection Summary			
HCM Average Control Delay	6.7	HCM Level of Service	A
HCM Volume to Capacity ratio	0.61		
Actuated Cycle Length (s)	113.7	Sum of lost time (s)	10.0
Intersection Capacity Utilization	57.4%	ICU Level of Service	B
Analysis Period (min)	15		
c Critical Lane Group			

Movement	EBL	EBT	EBR	WBL	WBT	WBR	NEL	NET	NER	SWL	SWT	SWR
Lane Configurations												
Volume (vph)	0	4	0	0	91	0	2	2274	12	0	0	0
Movement Number	7	4	14	3	8	18	5	2	12	1	6	16
Initial Queue, veh	0	0	0	0	0	0	0	0	0	0	0	0
Ped-Bike Adj. Factor (A_pbT)	1.00		1.00	1.00		1.00	1.00		1.00	1.00		1.00
Parking, Bus Adj. Factors	1.00	1.00	1.00	1.00	1.00	1.00	1.00	1.00	1.00	1.00	1.00	1.00
Adj. Sat. Flow Rate, veh/h/ln	1900	1863	1900	1900	1863	1900	1863	1863	1863	1900	1900	1900
Lanes	0	1	0	0	1	0	0	3	0	0	0	0
Lane Assignment												
Capacity, veh/h	33	134	0	0	134	0	36	4108	22	0	0	0
Proportion Arriving On Green	0.00	0.07	0.00	0.00	0.07	0.00	0.83	0.83	0.83	0.00	0.00	0.00
Movement Delay, s/veh	0.0	42.9	0.0	0.0	53.9	0.0	7.6	5.1	5.2	0.0	0.0	0.0
Movement LOS		D			D		A	A	A			
Approach Volume, veh/h		4			102			2571			0	
Approach Delay, s/veh		42.9			53.9			5.9			0.0	
Approach LOS		D			D			A				

Timer:	1	2	3	4	5	6	7	8
Assigned Phase		2		4				8
Case No		8.0		8.0				8.0
Phase Duration (G+Y+Rc), s		87.00		12.12				12.12
Change Period (Y+Rc), s		5.00		5.00				5.00
Max. Allowable Headway (MAH), s		3.91		3.90				3.90
Maximum Green Setting (Gmax), s		82.00		18.00				18.00
Max. Queue Clearance Time (g_c+I1), s		84.00		2.22				7.34
Green Extension Time (g_e), s		0.00		0.22				0.17
Probability of Phase Call (p_c)		1.000		0.947				0.947
Probability of Max Out (p_x)		1.000		0.000				0.001

Left-Turn Movement Data				
Assigned Movement		5		7
Mvmt. Sat Flow, veh/h		4.37		0.00

Through Movement Data				
Assigned Movement		2		4				8
Mvmt. Sat Flow, veh/h		4961.83		1862.75				1862.75

Right-Turn Movement Data				
Assigned Movement		12		14				18
Mvmt. Sat Flow, veh/h		26.16		0.00				0.00

Left Lane Group Data								
Assigned Movement	0	5	0	7	0	0	0	0
Lane Assignment		L+T						
Lanes in Group	0	1	0	0	0	0	0	0
Group Volume (v), veh/h	0.0	827.0	0.0	0.0	0.0	0.0	0.0	0.0
Group Sat. Flow (s), veh/h/ln	0.0	1606.8	0.0	0.0	0.0	0.0	0.0	0.0
Queue Serve Time (g_s), s	0.0	0.0	0.0	0.0	0.0	0.0	0.0	0.0
Cycle Queue Clear Time (g_c), s	0.0	82.0	0.0	0.0	0.0	0.0	0.0	0.0

Perm LT Sat Flow Rate (s_l), veh/h/ln	0.0	800.0	0.0	0.0	0.0	0.0	0.0	0.0
Shared LT Sat Flow (s_sh), veh/h/ln	0.0	0.0	0.0	1862.7	0.0	0.0	0.0	0.0
Perm LT Eff. Green (g_p), s	0.0	82.0	0.0	0.0	0.0	0.0	0.0	0.0
Perm LT Serve Time (g_u), s	0.0	0.0	0.0	0.0	0.0	0.0	0.0	0.0
Perm LT Que Serve Time (g_ps), s	0.0	0.0	0.0	0.0	0.0	0.0	0.0	0.0
Time to First Blk (g_f), s	0.0	70.7	0.0	7.1	0.0	0.0	0.0	7.1
Serve Time pre Blk (g_fs), s	0.0	19.2	0.0	0.0	0.0	0.0	0.0	0.0
Proportion LT Inside Lane (P_L)	0.000	0.003	0.000	0.000	0.000	0.000	0.000	0.000
Lane Group Capacity (c), veh/h	0.0	1365.7	0.0	0.0	0.0	0.0	0.0	0.0
Volume-to-Capacity Ratio (X)	0.000	0.606	0.000	0.000	0.000	0.000	0.000	0.000
Available Capacity (c_a), veh/h	0.0	1365.7	0.0	0.0	0.0	0.0	0.0	0.0
Upstream Filter Factor (I)	0.000	1.000	0.000	0.000	0.000	0.000	0.000	0.000
Uniform Delay (d1), s/veh	0.0	5.6	0.0	0.0	0.0	0.0	0.0	0.0
Incremental Delay (d2), s/veh	0.0	2.0	0.0	0.0	0.0	0.0	0.0	0.0
Initial Queue Delay (d3), s/veh	0.0	0.0	0.0	0.0	0.0	0.0	0.0	0.0
Control Delay (d), s/veh	0.0	7.6	0.0	0.0	0.0	0.0	0.0	0.0
First-Term Queue (Q1), veh/ln	0.0	5.6	0.0	0.0	0.0	0.0	0.0	0.0
Second-Term Queue (Q2), veh/ln	0.0	0.8	0.0	0.0	0.0	0.0	0.0	0.0
Third-Term Queue (Q3), veh/ln	0.0	0.0	0.0	0.0	0.0	0.0	0.0	0.0
Percentile bk-of-que factor (f_B%)	0.000	1.000	0.000	1.000	0.000	0.000	0.000	0.000
Percentile Back of Queue (Q%), veh/ln	0.0	6.4	0.0	0.0	0.0	0.0	0.0	0.0
Percentile Storage Ratio (RQ%)	0.00	0.34	0.00	0.00	0.00	0.00	0.00	0.00
Initial Queue (Qb), veh	0.0	0.0	0.0	0.0	0.0	0.0	0.0	0.0
Final (Residual) Queue (Qe), veh	0.0	0.0	0.0	0.0	0.0	0.0	0.0	0.0
Saturated Delay (ds), s/veh	0.0	0.0	0.0	0.0	0.0	0.0	0.0	0.0
Saturated Queue (Qs), veh	0.0	0.0	0.0	0.0	0.0	0.0	0.0	0.0
Saturated Capacity (cs), veh/h	0.0	0.0	0.0	0.0	0.0	0.0	0.0	0.0
Initial Queue Clear Time (tc), h	0.0	0.0	0.0	0.0	0.0	0.0	0.0	0.0
Middle Lane Group Data								
Assigned Movement	0	2	0	4	0	0	0	8
Lane Assignment		T		T				T
Lanes in Group	0	1	0	1	0	0	0	1
Group Volume (v), veh/h	0.0	872.4	0.0	4.5	0.0	0.0	0.0	102.2
Group Sat. Flow (s), veh/h/ln	0.0	1695.1	0.0	1862.7	0.0	0.0	0.0	1862.7
Queue Serve Time (g_s), s	0.0	18.2	0.0	0.2	0.0	0.0	0.0	5.3
Cycle Queue Clear Time (g_c), s	0.0	18.2	0.0	0.2	0.0	0.0	0.0	5.3
Lane Group Capacity (c), veh/h	0.0	1402.3	0.0	133.8	0.0	0.0	0.0	133.8
Volume-to-Capacity Ratio (X)	0.000	0.622	0.000	0.034	0.000	0.000	0.000	0.764
Available Capacity (c_a), veh/h	0.0	1402.3	0.0	338.3	0.0	0.0	0.0	338.3
Upstream Filter Factor (I)	0.000	1.000	0.000	1.000	0.000	0.000	0.000	1.000
Uniform Delay (d1), s/veh	0.0	3.0	0.0	42.8	0.0	0.0	0.0	45.2
Incremental Delay (d2), s/veh	0.0	2.1	0.0	0.1	0.0	0.0	0.0	8.7
Initial Queue Delay (d3), s/veh	0.0	0.0	0.0	0.0	0.0	0.0	0.0	0.0
Control Delay (d), s/veh	0.0	5.1	0.0	42.9	0.0	0.0	0.0	53.9
First-Term Queue (Q1), veh/ln	0.0	3.4	0.0	0.1	0.0	0.0	0.0	2.5
Second-Term Queue (Q2), veh/ln	0.0	0.8	0.0	0.0	0.0	0.0	0.0	0.3
Third-Term Queue (Q3), veh/ln	0.0	0.0	0.0	0.0	0.0	0.0	0.0	0.0
Percentile bk-of-que factor (f_B%)	0.000	1.000	0.000	1.000	0.000	0.000	0.000	1.000
Percentile Back of Queue (Q%), veh/ln	0.0	4.2	0.0	0.1	0.0	0.0	0.0	2.8
Percentile Storage Ratio (RQ%)	0.00	0.22	0.00	0.01	0.00	0.00	0.00	0.31

Initial Queue (Qb), veh	0.0	0.0	0.0	0.0	0.0	0.0	0.0	0.0
Final (Residual) Queue (Qe), veh	0.0	0.0	0.0	0.0	0.0	0.0	0.0	0.0
Saturated Delay (ds), s/veh	0.0	0.0	0.0	0.0	0.0	0.0	0.0	0.0
Saturated Queue (Qs), veh	0.0	0.0	0.0	0.0	0.0	0.0	0.0	0.0
Saturated Capacity (cs), veh/h	0.0	0.0	0.0	0.0	0.0	0.0	0.0	0.0
Initial Queue Clear Time (tc), h	0.0	0.0	0.0	0.0	0.0	0.0	0.0	0.0
Right Lane Group Data								
Assigned Movement	0	12	0	14	0	0	0	18
Lane Assignment		T+R						
Lanes in Group	0	1	0	0	0	0	0	0
Group Volume (v), veh/h	0.0	871.4	0.0	0.0	0.0	0.0	0.0	0.0
Group Sat. Flow (s), veh/h/ln	0.0	1690.5	0.0	0.0	0.0	0.0	0.0	0.0
Queue Serve Time (g_s), s	0.0	18.2	0.0	0.0	0.0	0.0	0.0	0.0
Cycle Queue Clear Time (g_c), s	0.0	18.2	0.0	0.0	0.0	0.0	0.0	0.0
Prot RT Sat Flow Rate (s_R), veh/h/ln	0.0	0.0	0.0	0.0	0.0	0.0	0.0	0.0
Prot RT Eff. Green (g_R), s	0.0	0.0	0.0	0.0	0.0	0.0	0.0	0.0
Proportion RT Outside Lane (P_R)	0.000	0.015	0.000	0.000	0.000	0.000	0.000	0.000
Lane Group Capacity (c), veh/h	0.0	1398.5	0.0	0.0	0.0	0.0	0.0	0.0
Volume-to-Capacity Ratio (X)	0.000	0.623	0.000	0.000	0.000	0.000	0.000	0.000
Available Capacity (c_a), veh/h	0.0	1398.5	0.0	0.0	0.0	0.0	0.0	0.0
Upstream Filter Factor (I)	0.000	1.000	0.000	0.000	0.000	0.000	0.000	0.000
Uniform Delay (d1), s/veh	0.0	3.1	0.0	0.0	0.0	0.0	0.0	0.0
Incremental Delay (d2), s/veh	0.0	2.1	0.0	0.0	0.0	0.0	0.0	0.0
Initial Queue Delay (d3), s/veh	0.0	0.0	0.0	0.0	0.0	0.0	0.0	0.0
Control Delay (d), s/veh	0.0	5.2	0.0	0.0	0.0	0.0	0.0	0.0
First-Term Queue (Q1), veh/ln	0.0	3.4	0.0	0.0	0.0	0.0	0.0	0.0
Second-Term Queue (Q2), veh/ln	0.0	0.8	0.0	0.0	0.0	0.0	0.0	0.0
Third-Term Queue (Q3), veh/ln	0.0	0.0	0.0	0.0	0.0	0.0	0.0	0.0
Percentile bk-of-que factor (f_B%)	0.000	1.000	0.000	1.000	0.000	0.000	0.000	1.000
Percentile Back of Queue (Q%), veh/ln	0.0	4.2	0.0	0.0	0.0	0.0	0.0	0.0
Percentile Storage Ratio (RQ%)	0.00	0.22	0.00	0.00	0.00	0.00	0.00	0.00
Initial Queue (Qb), veh	0.0	0.0	0.0	0.0	0.0	0.0	0.0	0.0
Final (Residual) Queue (Qe), veh	0.0	0.0	0.0	0.0	0.0	0.0	0.0	0.0
Saturated Delay (ds), s/veh	0.0	0.0	0.0	0.0	0.0	0.0	0.0	0.0
Saturated Queue (Qs), veh	0.0	0.0	0.0	0.0	0.0	0.0	0.0	0.0
Saturated Capacity (cs), veh/h	0.0	0.0	0.0	0.0	0.0	0.0	0.0	0.0
Initial Queue Clear Time (tc), h	0.0	0.0	0.0	0.0	0.0	0.0	0.0	0.0
Intersection Summary								
HCM Average Control Delay		7.8						
HCM Level of Service		A						

Movement	EBL	EBR	NBL	NBT	SBT	SBR
Lane Configurations						
Volume (veh/h)	1	2	6	267	137	0
Sign Control	Stop			Free	Free	
Grade	0%			0%	0%	
Peak Hour Factor	0.92	0.92	0.92	0.92	0.92	0.92
Hourly flow rate (vph)	1	2	7	290	149	0
Pedestrians						
Lane Width (ft)						
Walking Speed (ft/s)						
Percent Blockage						
Right turn flare (veh)						
Median type				None	None	
Median storage veh)						
Upstream signal (ft)				296		
pX, platoon unblocked						
vC, conflicting volume	452	149	149			
vC1, stage 1 conf vol						
vC2, stage 2 conf vol						
vCu, unblocked vol	452	149	149			
tC, single (s)	6.4	6.2	4.1			
tC, 2 stage (s)						
tF (s)	3.5	3.3	2.2			
p0 queue free %	100	100	100			
cM capacity (veh/h)	563	898	1433			

Direction, Lane #	EB 1	NB 1	SB 1
Volume Total	3	297	149
Volume Left	1	7	0
Volume Right	2	0	0
cSH	749	1433	1700
Volume to Capacity	0.00	0.00	0.09
Queue Length 95th (ft)	0	0	0
Control Delay (s)	9.8	0.2	0.0
Lane LOS	A	A	
Approach Delay (s)	9.8	0.2	0.0
Approach LOS	A		

Intersection Summary			
Average Delay	0.2		
Intersection Capacity Utilization	28.9%	ICU Level of Service	A
Analysis Period (min)	15		

Movement	EBL	EBR	NBL	NBT	SBT	SBR
Lane Configurations						
Volume (veh/h)	9	3	10	260	134	1
Sign Control	Stop			Free	Free	
Grade	0%			0%	0%	
Peak Hour Factor	0.92	0.92	0.92	0.92	0.92	0.92
Hourly flow rate (vph)	10	3	11	283	146	1
Pedestrians						
Lane Width (ft)						
Walking Speed (ft/s)						
Percent Blockage						
Right turn flare (veh)						
Median type				None	None	
Median storage veh)						
Upstream signal (ft)				581		
pX, platoon unblocked						
vC, conflicting volume	451	146	147			
vC1, stage 1 conf vol						
vC2, stage 2 conf vol						
vCu, unblocked vol	451	146	147			
tC, single (s)	6.4	6.2	4.1			
tC, 2 stage (s)						
tF (s)	3.5	3.3	2.2			
p0 queue free %	98	100	99			
cM capacity (veh/h)	562	901	1435			

Direction, Lane #	EB 1	NB 1	SB 1
Volume Total	13	293	147
Volume Left	10	11	0
Volume Right	3	0	1
cSH	620	1435	1700
Volume to Capacity	0.02	0.01	0.09
Queue Length 95th (ft)	2	1	0
Control Delay (s)	10.9	0.3	0.0
Lane LOS	B	A	
Approach Delay (s)	10.9	0.3	0.0
Approach LOS	B		

Intersection Summary			
Average Delay	0.5		
Intersection Capacity Utilization	31.8%	ICU Level of Service	A
Analysis Period (min)	15		

Movement	EBL	EBR	NBL	NBT	SBT	SBR
Lane Configurations						
Volume (veh/h)	15	17	31	235	110	1
Sign Control	Stop			Free	Free	
Grade	0%			0%	0%	
Peak Hour Factor	0.92	0.92	0.92	0.92	0.92	0.92
Hourly flow rate (vph)	16	18	34	255	120	1
Pedestrians						
Lane Width (ft)						
Walking Speed (ft/s)						
Percent Blockage						
Right turn flare (veh)						
Median type				None	None	
Median storage veh)						
Upstream signal (ft)				866		
pX, platoon unblocked						
vC, conflicting volume	443	120	121			
vC1, stage 1 conf vol						
vC2, stage 2 conf vol						
vCu, unblocked vol	443	120	121			
tC, single (s)	6.4	6.2	4.1			
tC, 2 stage (s)						
tF (s)	3.5	3.3	2.2			
p0 queue free %	97	98	98			
cM capacity (veh/h)	559	931	1467			

Direction, Lane #	EB 1	NB 1	SB 1
Volume Total	35	289	121
Volume Left	16	34	0
Volume Right	18	0	1
cSH	710	1467	1700
Volume to Capacity	0.05	0.02	0.07
Queue Length 95th (ft)	4	2	0
Control Delay (s)	10.3	1.1	0.0
Lane LOS	B	A	
Approach Delay (s)	10.3	1.1	0.0
Approach LOS	B		

Intersection Summary			
Average Delay	1.5		
Intersection Capacity Utilization	30.7%	ICU Level of Service	A
Analysis Period (min)	15		

Movement	EBL	EBR	NBL	NBT	SBT	SBR
Lane Configurations						
Volume (veh/h)	20	25	25	210	76	32
Sign Control	Stop			Free	Free	
Grade	0%			0%	0%	
Peak Hour Factor	0.92	0.92	0.92	0.92	0.92	0.92
Hourly flow rate (vph)	22	27	27	228	83	35
Pedestrians						
Lane Width (ft)						
Walking Speed (ft/s)						
Percent Blockage						
Right turn flare (veh)						
Median type				None	None	
Median storage veh)						
Upstream signal (ft)						
pX, platoon unblocked						
vC, conflicting volume	383	100	117			
vC1, stage 1 conf vol						
vC2, stage 2 conf vol						
vCu, unblocked vol	383	100	117			
tC, single (s)	6.4	6.2	4.1			
tC, 2 stage (s)						
tF (s)	3.5	3.3	2.2			
p0 queue free %	96	97	98			
cM capacity (veh/h)	608	956	1471			

Direction, Lane #	EB 1	NB 1	SB 1
Volume Total	49	255	117
Volume Left	22	27	0
Volume Right	27	0	35
cSH	762	1471	1700
Volume to Capacity	0.06	0.02	0.07
Queue Length 95th (ft)	5	1	0
Control Delay (s)	10.0	0.9	0.0
Lane LOS	B	A	
Approach Delay (s)	10.0	0.9	0.0
Approach LOS	B		

Intersection Summary			
Average Delay	1.7		
Intersection Capacity Utilization	29.1%	ICU Level of Service	A
Analysis Period (min)	15		

Movement	EBL	EBT	EBR	WBL	WBT	WBR	NBL	NBT	NBR	SBL	SBT	SBR
Lane Configurations												
Sign Control		Stop			Stop			Stop			Stop	
Volume (vph)	4	104	60	36	112	2	25	180	26	2	4	5
Peak Hour Factor	0.92	0.92	0.92	0.92	0.92	0.92	0.92	0.92	0.92	0.92	0.92	0.92
Hourly flow rate (vph)	4	113	65	39	122	2	27	196	28	2	4	5

Direction, Lane #	EB 1	WB 1	NB 1	SB 1
Volume Total (vph)	183	163	251	12
Volume Left (vph)	4	39	27	2
Volume Right (vph)	65	2	28	5
Hadj (s)	-0.18	0.07	-0.01	-0.20
Departure Headway (s)	4.6	4.9	4.7	4.9
Degree Utilization, x	0.23	0.22	0.33	0.02
Capacity (veh/h)	729	693	718	657
Control Delay (s)	9.0	9.2	10.1	8.0
Approach Delay (s)	9.0	9.2	10.1	8.0
Approach LOS	A	A	B	A

Intersection Summary			
Delay	9.5		
HCM Level of Service	A		
Intersection Capacity Utilization	42.0%	ICU Level of Service	A
Analysis Period (min)	15		

HCM Unsignalized Intersection Capacity Analysis
1: SW 97th Ave. & SW 174th St.

2/18/2015

Movement	EBL	EBT	EBR	WBL	WBT	WBR	NBL	NBT	NBR	SBL	SBT	SBR
Lane Configurations												
Sign Control		Stop			Stop			Stop			Stop	
Volume (vph)	3	138	41	37	150	0	31	10	14	27	109	4
Peak Hour Factor	0.90	0.90	0.90	0.90	0.90	0.90	0.90	0.90	0.90	0.90	0.90	0.90
Hourly flow rate (vph)	3	153	46	41	167	0	34	11	16	30	121	4

Direction, Lane #	EB 1	WB 1	NB 1	SB 1
Volume Total (vph)	202	208	61	156
Volume Left (vph)	3	41	34	30
Volume Right (vph)	46	0	16	4
Hadj (s)	-0.10	0.07	-0.01	0.06
Departure Headway (s)	4.6	4.8	5.1	5.0
Degree Utilization, x	0.26	0.28	0.09	0.22
Capacity (veh/h)	728	708	633	656
Control Delay (s)	9.3	9.6	8.6	9.4
Approach Delay (s)	9.3	9.6	8.6	9.4
Approach LOS	A	A	A	A

Intersection Summary			
Delay	9.4		
HCM Level of Service	A		
Intersection Capacity Utilization	37.4%	ICU Level of Service	A
Analysis Period (min)	15		

Lane Group	EBL	EBR	NBL	NBT	NBR	SBT	NET
Lane Group Flow (vph)	4	130	8	8	326	162	2491
v/c Ratio	0.03	0.66	0.08	0.02	0.21	0.45	0.65
Control Delay	90.2	111.7	89.5	87.0	0.3	94.1	14.1
Queue Delay	0.0	0.0	0.0	0.0	0.0	0.0	0.3
Total Delay	90.2	111.7	89.5	87.0	0.3	94.1	14.4
Queue Length 50th (ft)	5	102	10	5	0	114	581
Queue Length 95th (ft)	20	149	32	16	0	163	671
Internal Link Dist (ft)	257			1041		665	1300
Turn Bay Length (ft)					200		
Base Capacity (vph)	201	300	100	368	1583	359	3805
Starvation Cap Reductn	0	0	0	0	0	0	561
Spillback Cap Reductn	0	0	0	0	0	0	0
Storage Cap Reductn	0	0	0	0	0	0	0
Reduced v/c Ratio	0.02	0.43	0.08	0.02	0.21	0.45	0.77

Intersection Summary

Movement	EBL	EBR	NBL	NBT	NBR	SBT	SBR	NEL2	NEL	NET	NER
Lane Configurations											
Volume (vph)	4	125	8	8	313	130	26	4	21	2322	44
Ideal Flow (vphpl)	1900	1900	1900	1900	1900	1900	1900	1900	1900	1900	1900
Total Lost time (s)	5.0	5.0	5.0	5.0	4.0	5.0				5.0	
Lane Util. Factor	1.00	0.88	1.00	0.95	1.00	0.95				0.91	
Frt	1.00	0.85	1.00	1.00	0.85	0.97				1.00	
Flt Protected	0.95	1.00	0.95	1.00	1.00	1.00				1.00	
Satd. Flow (prot)	1770	2647	1770	3539	1583	3451				5069	
Flt Permitted	0.95	1.00	0.52	1.00	1.00	1.00				1.00	
Satd. Flow (perm)	1770	2647	966	3539	1583	3451				5069	
Peak-hour factor, PHF	0.96	0.96	0.96	0.96	0.96	0.96	0.96	0.96	0.96	0.96	0.96
Adj. Flow (vph)	4	130	8	8	326	135	27	4	22	2419	46
RTOR Reduction (vph)	0	0	0	0	0	0	0	0	0	1	0
Lane Group Flow (vph)	4	130	8	8	326	162	0	0	0	2490	0
Parking (#/hr)		0									
Turn Type	NA	Perm	Perm	NA	Free	NA		Perm	Perm	NA	
Protected Phases	3			4		8				6	
Permitted Phases		3	4		Free			6	6		
Actuated Green, G (s)	15.7	15.7	22.0	22.0	211.7	22.0				159.0	
Effective Green, g (s)	15.7	15.7	22.0	22.0	211.7	22.0				159.0	
Actuated g/C Ratio	0.07	0.07	0.10	0.10	1.00	0.10				0.75	
Clearance Time (s)	5.0	5.0	5.0	5.0		5.0				5.0	
Vehicle Extension (s)	3.0	3.0	3.0	3.0		3.0				3.0	
Lane Grp Cap (vph)	131	196	100	368	1583	359				3807	
v/s Ratio Prot	0.00			0.00		c0.05					
v/s Ratio Perm		c0.05	0.01		0.21					0.49	
v/c Ratio	0.03	0.66	0.08	0.02	0.21	0.45				0.65	
Uniform Delay, d1	90.9	95.4	85.7	85.2	0.0	89.2				12.9	
Progression Factor	1.00	1.00	1.00	1.00	1.00	1.00				1.00	
Incremental Delay, d2	0.1	8.2	1.6	0.1	0.3	4.1				0.9	
Delay (s)	91.0	103.6	87.3	85.3	0.3	93.2				13.8	
Level of Service	F	F	F	F	A	F				B	
Approach Delay (s)	103.2			4.3		93.2				13.8	
Approach LOS	F			A		F				B	

Intersection Summary			
HCM Average Control Delay	20.7	HCM Level of Service	C
HCM Volume to Capacity ratio	0.63		
Actuated Cycle Length (s)	211.7	Sum of lost time (s)	15.0
Intersection Capacity Utilization	71.3%	ICU Level of Service	C
Analysis Period (min)	15		

c Critical Lane Group

Movement	EBL	EBR	NBL	NBT	SBT	SBR
Lane Configurations						
Volume (veh/h)	47	86	21	263	173	75
Sign Control	Stop			Free	Free	
Grade	0%			0%	0%	
Peak Hour Factor	0.92	0.92	0.92	0.92	0.92	0.92
Hourly flow rate (vph)	51	93	23	286	188	82
Pedestrians						
Lane Width (ft)						
Walking Speed (ft/s)						
Percent Blockage						
Right turn flare (veh)						
Median type				None	None	
Median storage veh)						
Upstream signal (ft)					1121	
pX, platoon unblocked	0.96	0.96	0.96			
vC, conflicting volume	560	229	270			
vC1, stage 1 conf vol						
vC2, stage 2 conf vol						
vCu, unblocked vol	518	171	214			
tC, single (s)	6.4	6.2	4.1			
tC, 2 stage (s)						
tF (s)	3.5	3.3	2.2			
p0 queue free %	90	89	98			
cM capacity (veh/h)	487	835	1298			

Direction, Lane #	EB 1	NB 1	SB 1
Volume Total	145	309	270
Volume Left	51	23	0
Volume Right	93	0	82
cSH	666	1298	1700
Volume to Capacity	0.22	0.02	0.16
Queue Length 95th (ft)	21	1	0
Control Delay (s)	11.9	0.7	0.0
Lane LOS	B	A	
Approach Delay (s)	11.9	0.7	0.0
Approach LOS	B		

Intersection Summary			
Average Delay	2.7		
Intersection Capacity Utilization	45.7%	ICU Level of Service	A
Analysis Period (min)	15		

Movement	WBL	WBR	NBT	NBR	SBL	SBT
Lane Configurations						
Volume (veh/h)	140	57	227	38	33	178
Sign Control	Stop		Free			Free
Grade	0%		0%			0%
Peak Hour Factor	0.94	0.94	0.94	0.94	0.94	0.94
Hourly flow rate (vph)	149	61	241	40	35	189
Pedestrians			187			
Lane Width (ft)			12.0			
Walking Speed (ft/s)			4.0			
Percent Blockage			16			
Right turn flare (veh)						
Median type			None			None
Median storage veh)						
Upstream signal (ft)						
pX, platoon unblocked						
vC, conflicting volume	708	262			282	
vC1, stage 1 conf vol						
vC2, stage 2 conf vol						
vCu, unblocked vol	708	262			282	
tC, single (s)	6.4	6.2			4.1	
tC, 2 stage (s)						
tF (s)	3.5	3.3			2.2	
p0 queue free %	55	92			97	
cM capacity (veh/h)	329	777			1281	

Direction, Lane #	WB 1	NB 1	SB 1
Volume Total	210	282	224
Volume Left	149	0	35
Volume Right	61	40	0
cSH	395	1700	1281
Volume to Capacity	0.53	0.17	0.03
Queue Length 95th (ft)	75	0	2
Control Delay (s)	23.9	0.0	1.4
Lane LOS	C		A
Approach Delay (s)	23.9	0.0	1.4
Approach LOS	C		

Intersection Summary			
Average Delay	7.5		
Intersection Capacity Utilization	46.7%	ICU Level of Service	A
Analysis Period (min)	15		

Movement	EBL	EBR	NBL	NBT	SBT	SBR
Lane Configurations						
Volume (veh/h)	16	56	16	263	232	94
Sign Control	Stop			Free	Free	
Grade	0%			0%	0%	
Peak Hour Factor	0.93	0.93	0.93	0.93	0.93	0.93
Hourly flow rate (vph)	17	60	17	283	249	101
Pedestrians						
Lane Width (ft)						
Walking Speed (ft/s)						
Percent Blockage						
Right turn flare (veh)						
Median type				None	None	
Median storage veh)						
Upstream signal (ft)				1230		
pX, platoon unblocked						
vC, conflicting volume	617	300	351			
vC1, stage 1 conf vol						
vC2, stage 2 conf vol						
vCu, unblocked vol	617	300	351			
tC, single (s)	6.4	6.2	4.1			
tC, 2 stage (s)						
tF (s)	3.5	3.3	2.2			
p0 queue free %	96	92	99			
cM capacity (veh/h)	447	740	1208			

Direction, Lane #	EB 1	NB 1	SB 1
Volume Total	77	300	351
Volume Left	17	17	0
Volume Right	60	0	101
cSH	646	1208	1700
Volume to Capacity	0.12	0.01	0.21
Queue Length 95th (ft)	10	1	0
Control Delay (s)	11.3	0.6	0.0
Lane LOS	B	A	
Approach Delay (s)	11.3	0.6	0.0
Approach LOS	B		

Intersection Summary			
Average Delay	1.4		
Intersection Capacity Utilization	37.9%	ICU Level of Service	A
Analysis Period (min)	15		

Movement	EBL	EBT	EBR	WBL	WBT	WBR	NBL	NBT	NBR	SBL	SBT	SBR
Lane Configurations												
Volume (veh/h)	34	6	46	54	30	6	9	245	32	2	224	54
Sign Control		Stop			Stop			Free			Free	
Grade		0%			0%			0%			0%	
Peak Hour Factor	0.87	0.87	0.87	0.87	0.87	0.87	0.87	0.87	0.87	0.87	0.87	0.87
Hourly flow rate (vph)	39	7	53	62	34	7	10	282	37	2	257	62
Pedestrians												
Lane Width (ft)												
Walking Speed (ft/s)												
Percent Blockage												
Right turn flare (veh)												
Median type								None			None	
Median storage veh)												
Upstream signal (ft)								904				
pX, platoon unblocked	0.93	0.93		0.93	0.93	0.93				0.93		
vC, conflicting volume	638	632	289	670	645	300	320			318		
vC1, stage 1 conf vol												
vC2, stage 2 conf vol												
vCu, unblocked vol	573	566	289	607	580	209	320			229		
tC, single (s)	7.1	6.5	6.2	7.1	6.5	6.2	4.1			4.1		
tC, 2 stage (s)												
tF (s)	3.5	4.0	3.3	3.5	4.0	3.3	2.2			2.2		
p0 queue free %	89	98	93	82	91	99	99			100		
cM capacity (veh/h)	367	399	751	345	392	773	1240			1245		

Direction, Lane #	EB 1	WB 1	NB 1	SB 1
Volume Total	99	103	329	322
Volume Left	39	62	10	2
Volume Right	53	7	37	62
cSH	509	374	1240	1245
Volume to Capacity	0.19	0.28	0.01	0.00
Queue Length 95th (ft)	18	28	1	0
Control Delay (s)	13.8	18.3	0.3	0.1
Lane LOS	B	C	A	A
Approach Delay (s)	13.8	18.3	0.3	0.1
Approach LOS	B	C		

Intersection Summary			
Average Delay	4.0		
Intersection Capacity Utilization	35.3%	ICU Level of Service	A
Analysis Period (min)	15		

Movement	EBL	EBT	EBR	WBL	WBT	WBR	NBL	NBT	NBR	SBL	SBT	SBR
Lane Configurations												
Volume (veh/h)	7	3	4	19	0	0	4	284	10	1	311	6
Sign Control		Stop			Stop			Free			Free	
Grade		0%			0%			0%			0%	
Peak Hour Factor	0.91	0.91	0.91	0.91	0.91	0.91	0.91	0.91	0.91	0.91	0.91	0.91
Hourly flow rate (vph)	8	3	4	21	0	0	4	312	11	1	342	7
Pedestrians												
Lane Width (ft)												
Walking Speed (ft/s)												
Percent Blockage												
Right turn flare (veh)												
Median type								None			None	
Median storage veh)												
Upstream signal (ft)								601				
pX, platoon unblocked	0.87	0.87		0.87	0.87	0.87				0.87		
vC, conflicting volume	674	679	345	680	677	318	348			323		
vC1, stage 1 conf vol												
vC2, stage 2 conf vol												
vCu, unblocked vol	550	557	345	557	554	141	348			147		
tC, single (s)	7.1	6.5	6.2	7.1	6.5	6.2	4.1			4.1		
tC, 2 stage (s)												
tF (s)	3.5	4.0	3.3	3.5	4.0	3.3	2.2			2.2		
p0 queue free %	98	99	99	94	100	100	100			100		
cM capacity (veh/h)	386	380	698	377	381	789	1211			1248		

Direction, Lane #	EB 1	WB 1	NB 1	SB 1
Volume Total	15	21	327	349
Volume Left	8	21	4	1
Volume Right	4	0	11	7
cSH	441	377	1211	1248
Volume to Capacity	0.03	0.06	0.00	0.00
Queue Length 95th (ft)	3	4	0	0
Control Delay (s)	13.5	15.1	0.1	0.0
Lane LOS	B	C	A	A
Approach Delay (s)	13.5	15.1	0.1	0.0
Approach LOS	B	C		

Intersection Summary			
Average Delay	0.8		
Intersection Capacity Utilization	28.5%	ICU Level of Service	A
Analysis Period (min)	15		

Movement	EBL	EBT	EBR	WBL	WBT	WBR	NBL	NBT	NBR	SBL	SBT	SBR
Lane Configurations												
Volume (veh/h)	11	1	79	3	11	1	13	289	6	1	291	39
Sign Control		Stop			Stop			Free			Free	
Grade		0%			0%			0%			0%	
Peak Hour Factor	0.93	0.93	0.93	0.93	0.93	0.93	0.93	0.93	0.93	0.93	0.93	0.93
Hourly flow rate (vph)	12	1	85	3	12	1	14	311	6	1	313	42
Pedestrians												
Lane Width (ft)												
Walking Speed (ft/s)												
Percent Blockage												
Right turn flare (veh)												
Median type								None			None	
Median storage veh)												
Upstream signal (ft)								300				
pX, platoon unblocked	0.82	0.82		0.82	0.82	0.82				0.82		
vC, conflicting volume	685	681	334	763	699	314	355			317		
vC1, stage 1 conf vol												
vC2, stage 2 conf vol												
vCu, unblocked vol	511	507	334	606	528	61	355			65		
tC, single (s)	7.1	6.5	6.2	7.1	6.5	6.2	4.1			4.1		
tC, 2 stage (s)												
tF (s)	3.5	4.0	3.3	3.5	4.0	3.3	2.2			2.2		
p0 queue free %	97	100	88	99	97	100	99			100		
cM capacity (veh/h)	376	381	708	293	371	828	1204			1267		

Direction, Lane #	EB 1	WB 1	NB 1	SB 1
Volume Total	98	16	331	356
Volume Left	12	3	14	1
Volume Right	85	1	6	42
cSH	634	365	1204	1267
Volume to Capacity	0.15	0.04	0.01	0.00
Queue Length 95th (ft)	14	3	1	0
Control Delay (s)	11.7	15.3	0.4	0.0
Lane LOS	B	C	A	A
Approach Delay (s)	11.7	15.3	0.4	0.0
Approach LOS	B	C		

Intersection Summary			
Average Delay	1.9		
Intersection Capacity Utilization	38.5%	ICU Level of Service	A
Analysis Period (min)	15		

Lane Group	EBL	EBT	EBR	WBL	WBT	NBL	NBT	SBL	SBT
Lane Group Flow (vph)	125	613	193	467	633	168	493	32	379
v/c Ratio	0.20	0.63	0.43	0.68	0.63	0.48	0.67	0.09	0.53
Control Delay	15.7	41.4	21.4	29.0	53.8	43.2	46.5	42.9	59.0
Queue Delay	0.0	0.0	0.0	0.1	0.1	0.0	0.0	0.0	0.0
Total Delay	15.7	41.4	21.4	29.1	53.8	43.2	46.5	42.9	59.0
Queue Length 50th (ft)	51	183	46	285	291	119	149	23	174
Queue Length 95th (ft)	107	352	148	481	472	226	266	60	295
Internal Link Dist (ft)		1441			531		229		156
Turn Bay Length (ft)	130			95		155		130	
Base Capacity (vph)	955	1351	600	874	1370	463	1034	395	1038
Starvation Cap Reductn	0	0	0	40	74	0	0	0	0
Spillback Cap Reductn	0	0	0	0	0	0	0	0	0
Storage Cap Reductn	0	0	0	0	0	0	0	0	0
Reduced v/c Ratio	0.13	0.45	0.32	0.56	0.49	0.36	0.48	0.08	0.37

Intersection Summary

Movement	EBL	EBT	EBR	WBL	WBT	WBR	NBL	NBT	NBR	SBL	SBT	SBR
Lane Configurations												
Volume (vph)	115	564	178	430	569	14	155	219	235	29	301	48
Ideal Flow (vphpl)	1900	1900	1900	1900	1900	1900	1900	1900	1900	1900	1900	1900
Total Lost time (s)	3.0	3.0	5.0	3.0	3.0		3.0	3.0		3.0	3.0	
Lane Util. Factor	1.00	0.95	1.00	1.00	0.95		1.00	0.95		1.00	0.95	
Frt	1.00	1.00	0.85	1.00	1.00		1.00	0.92		1.00	0.98	
Flt Protected	0.95	1.00	1.00	0.95	1.00		0.95	1.00		0.95	1.00	
Satd. Flow (prot)	1770	3539	1583	1770	3527		1770	3265		1770	3466	
Flt Permitted	0.24	1.00	1.00	0.42	1.00		0.40	1.00		0.47	1.00	
Satd. Flow (perm)	439	3539	1583	782	3527		747	3265		879	3466	
Peak-hour factor, PHF	0.92	0.92	0.92	0.92	0.92	0.92	0.92	0.92	0.92	0.92	0.92	0.92
Adj. Flow (vph)	125	613	193	467	618	15	168	238	255	32	327	52
RTOR Reduction (vph)	0	0	107	0	1	0	0	89	0	0	6	0
Lane Group Flow (vph)	125	613	86	467	632	0	168	404	0	32	373	0
Turn Type	custom	NA	custom	custom	NA		custom	NA		custom	NA	
Protected Phases	1 2	2 4		1 3	3 4		5 6	6 8		5 7	7 8	
Permitted Phases	4		4	4			8			8		
Actuated Green, G (s)	79.7	40.7	33.3	77.6	41.6		43.3	28.8		41.8	30.3	
Effective Green, g (s)	79.7	40.7	33.3	77.6	41.6		43.3	28.8		41.8	30.3	
Actuated g/C Ratio	0.52	0.26	0.22	0.50	0.27		0.28	0.19		0.27	0.20	
Clearance Time (s)			5.0									
Vehicle Extension (s)			3.0									
Lane Grp Cap (vph)	628	935	342	678	952		341	610		344	682	
v/s Ratio Prot	0.06	c0.17		c0.20	c0.18		c0.06	c0.12		0.01	c0.11	
v/s Ratio Perm	0.04		0.05	0.15			0.08			0.01		
v/c Ratio	0.20	0.66	0.25	0.69	0.66		0.49	0.66		0.09	0.55	
Uniform Delay, d1	20.1	50.5	50.1	25.8	50.0		44.1	58.1		41.7	55.7	
Progression Factor	1.00	1.00	1.00	1.00	1.00		1.00	1.00		1.00	1.00	
Incremental Delay, d2	0.2	1.7	0.4	2.9	1.8		1.1	2.7		0.1	0.9	
Delay (s)	20.3	52.1	50.4	28.7	51.8		45.3	60.8		41.8	56.6	
Level of Service	C	D	D	C	D		D	E		D	E	
Approach Delay (s)		47.5			42.0			56.9			55.5	
Approach LOS		D			D			E			E	

Intersection Summary			
HCM Average Control Delay	48.6	HCM Level of Service	D
HCM Volume to Capacity ratio	0.63		
Actuated Cycle Length (s)	154.1	Sum of lost time (s)	15.0
Intersection Capacity Utilization	71.2%	ICU Level of Service	C
Analysis Period (min)	15		
c Critical Lane Group			

Lane Group	EBL	EBT	WBT	SBL
Lane Group Flow (vph)	332	684	859	283
v/c Ratio	0.95	0.30	0.38	0.60
Control Delay	62.5	11.6	12.6	70.3
Queue Delay	0.7	0.3	0.0	0.0
Total Delay	63.1	11.9	12.6	70.3
Queue Length 50th (ft)	306	155	208	382
Queue Length 95th (ft)	#628	180	238	#526
Internal Link Dist (ft)		531	201	216
Turn Bay Length (ft)	75			
Base Capacity (vph)	451	2998	2915	474
Starvation Cap Reductn	17	1549	0	0
Spillback Cap Reductn	0	0	0	0
Storage Cap Reductn	0	0	0	0
Reduced v/c Ratio	0.76	0.47	0.29	0.60

Intersection Summary

95th percentile volume exceeds capacity, queue may be longer.
Queue shown is maximum after two cycles.

Movement	EBL	EBT	WBT	WBR	SBL	SBR
Lane Configurations						
Volume (vph)	319	657	803	22	43	228
Ideal Flow (vphpl)	1900	1900	1900	1900	1900	1900
Total Lost time (s)	5.0	5.0	5.0		5.0	
Lane Util. Factor	1.00	0.95	0.95		1.00	
Frpb, ped/bikes	1.00	1.00	0.98		1.00	
Flpb, ped/bikes	1.00	1.00	1.00		1.00	
Frt	1.00	1.00	1.00		0.89	
Flt Protected	0.95	1.00	1.00		0.99	
Satd. Flow (prot)	1770	3539	3440		1638	
Flt Permitted	0.29	1.00	1.00		0.99	
Satd. Flow (perm)	533	3539	3440		1638	
Peak-hour factor, PHF	0.96	0.96	0.96	0.96	0.96	0.96
Adj. Flow (vph)	332	684	836	23	45	238
RTOR Reduction (vph)	0	0	1	0	9	0
Lane Group Flow (vph)	332	684	858	0	274	0
Confl. Peds. (#/hr)				805		
Turn Type	Perm	NA	NA		NA	
Protected Phases		4	8		6	
Permitted Phases	4					
Actuated Green, G (s)	116.8	116.8	116.8		50.8	
Effective Green, g (s)	116.8	116.8	116.8		50.8	
Actuated g/C Ratio	0.66	0.66	0.66		0.29	
Clearance Time (s)	5.0	5.0	5.0		5.0	
Vehicle Extension (s)	3.0	3.0	3.0		3.0	
Lane Grp Cap (vph)	351	2327	2262		469	
v/s Ratio Prot		0.19	0.25		c0.17	
v/s Ratio Perm	c0.62					
v/c Ratio	0.95	0.29	0.38		0.59	
Uniform Delay, d1	27.5	12.9	13.9		54.4	
Progression Factor	1.00	1.00	1.00		1.00	
Incremental Delay, d2	33.9	0.1	0.1		5.3	
Delay (s)	61.4	13.0	14.0		59.6	
Level of Service	E	B	B		E	
Approach Delay (s)		28.8	14.0		59.6	
Approach LOS		C	B		E	

Intersection Summary			
HCM Average Control Delay	26.9	HCM Level of Service	C
HCM Volume to Capacity ratio	0.84		
Actuated Cycle Length (s)	177.6	Sum of lost time (s)	10.0
Intersection Capacity Utilization	69.8%	ICU Level of Service	C
Analysis Period (min)	15		

c Critical Lane Group

Lane Group	EBL	EBT	EBR	WBL	WBT	WBR	NBL	NBT	NBR	SBL	SBT	SBR
Lane Group Flow (vph)	238	587	61	395	466	13	88	1504	467	232	2398	360
v/c Ratio	0.63	0.76	0.16	1.54	0.59	0.03	0.59	0.52	0.41	1.15	0.85	0.18
Control Delay	68.3	64.2	40.1	290.4	59.3	19.2	37.0	20.2	9.3	130.2	31.0	4.8
Queue Delay	0.0	0.0	0.0	0.0	0.0	0.0	0.0	0.0	0.0	0.0	0.0	0.0
Total Delay	68.3	64.2	40.1	290.4	59.3	19.2	37.0	20.2	9.3	130.2	31.0	4.8
Queue Length 50th (ft)	110	192	42	~455	147	0	29	301	147	~114	662	37
Queue Length 95th (ft)	156	237	82	#698	196	19	#92	376	242	#279	802	56
Internal Link Dist (ft)		484			394			469			768	
Turn Bay Length (ft)	200		200	286		200	160		200	130		200
Base Capacity (vph)	703	1077	390	257	795	380	154	2872	1137	201	2818	2240
Starvation Cap Reductn	0	0	0	0	0	0	0	0	0	0	0	0
Spillback Cap Reductn	0	0	0	0	0	0	0	0	0	0	0	0
Storage Cap Reductn	0	0	0	0	0	0	0	0	0	0	0	0
Reduced v/c Ratio	0.34	0.55	0.16	1.54	0.59	0.03	0.57	0.52	0.41	1.15	0.85	0.16

Intersection Summary

~ Volume exceeds capacity, queue is theoretically infinite.
Queue shown is maximum after two cycles.

95th percentile volume exceeds capacity, queue may be longer.
Queue shown is maximum after two cycles.

Movement	EBL	EBT	EBR	WBL	WBT	WBR	NBL	NBT	NBR	SBL	SBT	SBR
Lane Configurations												
Volume (vph)	219	540	56	363	429	12	81	1384	430	213	2206	331
Ideal Flow (vphpl)	1900	1900	1900	1900	1900	1900	1900	1900	1900	1900	1900	1900
Total Lost time (s)	5.0	5.0	3.0	5.0	5.0	3.0	3.0	5.0	5.0	3.0	5.0	5.0
Lane Util. Factor	0.97	0.91	1.00	1.00	0.91	1.00	1.00	0.91	1.00	1.00	0.91	0.88
Frt	1.00	1.00	0.85	1.00	1.00	0.85	1.00	1.00	0.85	1.00	1.00	0.85
Flt Protected	0.95	1.00	1.00	0.95	1.00	1.00	0.95	1.00	1.00	0.95	1.00	1.00
Satd. Flow (prot)	3433	5085	1583	1770	5085	1583	1770	5085	1583	1770	5085	2787
Flt Permitted	0.95	1.00	1.00	0.20	1.00	1.00	0.05	1.00	1.00	0.12	1.00	1.00
Satd. Flow (perm)	3433	5085	1583	367	5085	1583	93	5085	1583	221	5085	2787
Peak-hour factor, PHF	0.92	0.92	0.92	0.92	0.92	0.92	0.92	0.92	0.92	0.92	0.92	0.92
Adj. Flow (vph)	238	587	61	395	466	13	88	1504	467	232	2398	360
RTOR Reduction (vph)	0	0	3	0	0	10	0	0	9	0	0	43
Lane Group Flow (vph)	238	587	58	395	466	3	88	1504	458	232	2398	317
Turn Type	Prot	NA	pm+ov	pm+pt	NA	pm+ov	pm+pt	NA	pm+ov	pm+pt	NA	pm+ov
Protected Phases	7	4	5	3	8	1	5	2	3	1	6	7
Permitted Phases			4	8		8	2		2	6		6
Actuated Green, G (s)	15.5	21.7	29.2	38.2	22.2	28.2	87.5	80.0	96.0	84.5	78.5	94.0
Effective Green, g (s)	15.5	21.7	29.2	38.2	22.2	28.2	87.5	80.0	96.0	84.5	78.5	94.0
Actuated g/C Ratio	0.11	0.15	0.21	0.27	0.16	0.20	0.62	0.56	0.68	0.60	0.55	0.66
Clearance Time (s)	5.0	5.0	3.0	5.0	5.0	3.0	3.0	5.0	5.0	3.0	5.0	5.0
Vehicle Extension (s)	3.0	3.0	3.0	3.0	3.0	3.0	3.0	3.0	3.0	3.0	3.0	3.0
Lane Grp Cap (vph)	376	779	326	257	797	315	146	2871	1128	197	2817	1947
v/s Ratio Prot	0.07	0.12	0.01	c0.17	0.09	0.00	c0.03	0.30	0.05	c0.05	0.47	0.02
v/s Ratio Perm			0.03	c0.24		0.00	0.34		0.24	c0.65		0.10
v/c Ratio	0.63	0.75	0.18	1.54	0.58	0.01	0.60	0.52	0.41	1.18	0.85	0.16
Uniform Delay, d1	60.4	57.4	46.4	46.2	55.5	45.5	26.6	19.1	10.2	21.9	26.7	9.0
Progression Factor	1.00	1.00	1.00	1.00	1.00	1.00	1.00	1.00	1.00	1.00	1.00	1.00
Incremental Delay, d2	3.5	4.2	0.3	260.2	1.1	0.0	6.8	0.7	0.2	120.2	2.7	0.0
Delay (s)	63.8	61.6	46.6	306.5	56.6	45.5	33.4	19.8	10.4	142.1	29.3	9.0
Level of Service	E	E	D	F	E	D	C	B	B	F	C	A
Approach Delay (s)		61.2			169.3			18.2			35.6	
Approach LOS		E			F			B			D	

Intersection Summary			
HCM Average Control Delay	50.9	HCM Level of Service	D
HCM Volume to Capacity ratio	1.24		
Actuated Cycle Length (s)	141.7	Sum of lost time (s)	14.0
Intersection Capacity Utilization	93.5%	ICU Level of Service	F
Analysis Period (min)	15		
c Critical Lane Group			

Movement	EBL	EBT	EBR	WBL	WBT	WBR	NBL	NBT	NBR	SBL	SBT	SBR
Lane Configurations												
Volume (vph)	219	540	56	363	429	12	81	1384	430	213	2206	331
Movement Number	7	4	14	3	8	18	5	2	12	1	6	16
Initial Queue, veh	0	0	0	0	0	0	0	0	0	0	0	0
Ped-Bike Adj. Factor (A_pbT)	1.00		1.00	1.00		1.00	1.00		1.00	1.00		1.00
Parking, Bus Adj. Factors	1.00	1.00	1.00	1.00	1.00	1.00	1.00	1.00	1.00	1.00	1.00	1.00
Adj. Sat. Flow Rate, veh/h/ln	1863	1863	1863	1863	1863	1863	1863	1863	1863	1863	1863	1863
Lanes	2	3	1	1	3	1	1	3	1	1	3	2
Lane Assignment												
Capacity, veh/h	302	723	280	279	859	335	143	2908	1086	264	2950	1861
Proportion Arriving On Green	0.09	0.14	0.14	0.11	0.17	0.17	0.03	0.57	0.57	0.04	0.58	0.58
Movement Delay, s/veh	67.1	61.0	49.7	251.7	53.9	43.9	33.7	18.9	11.0	52.9	25.2	8.9
Movement LOS	E	E	D	F	D	D	C	B	B	D	C	A
Approach Volume, veh/h		886			874			2060			2989	
Approach Delay, s/veh		61.9			143.1			17.7			25.4	
Approach LOS		E			F			B			C	

Timer:	1	2	3	4	5	6	7	8
Assigned Phase	1	2	3	4	5	6	7	8
Case No	1.1	3.0	1.1	3.0	1.1	3.0	2.0	3.0
Phase Duration (G+Y+Rc), s	9.00	85.00	21.00	24.90	7.84	86.16	17.28	28.62
Change Period (Y+Rc), s	3.00	5.00	5.00	5.00	3.00	5.00	5.00	5.00
Max. Allowable Headway (MAH), s	4.00	3.93	4.00	3.91	4.00	3.93	4.00	3.91
Maximum Green Setting (Gmax), s	6.00	80.00	16.00	30.00	8.00	78.00	29.00	17.00
Max. Queue Clearance Time (g_c+I1), s	8.00	27.16	18.00	17.66	4.88	54.41	11.48	13.74
Green Extension Time (g_e), s	0.00	45.25	0.00	2.24	0.05	21.92	0.80	1.59
Probability of Phase Call (p_c)	1.000	1.000	1.000	1.000	0.967	1.000	1.000	1.000
Probability of Max Out (p_x)	1.000	0.801	1.000	0.169	1.000	0.915	0.000	1.000

Left-Turn Movement Data				
Assigned Movement	1	3	5	7
Mvmt. Sat Flow, veh/h	1774.04	1774.04	1774.04	3441.64

Through Movement Data				
Assigned Movement	2	4	6	8
Mvmt. Sat Flow, veh/h	5085.29	5085.29	5085.29	5085.29

Right-Turn Movement Data				
Assigned Movement	12	14	16	18
Mvmt. Sat Flow, veh/h	1583.33	1583.33	2786.67	1583.33

Left Lane Group Data								
Assigned Movement	1	0	3	0	5	0	7	0
Lane Assignment	L (Pr/Pm)		L (Pr/Pm)		L (Pr/Pm)		L (Prot)	
Lanes in Group	1	0	1	0	1	0	2	0
Group Volume (v), veh/h	231.5	0.0	394.6	0.0	88.0	0.0	238.0	0.0
Group Sat. Flow (s), veh/h/ln	1774.0	0.0	1774.0	0.0	1774.0	0.0	1720.8	0.0
Queue Serve Time (g_s), s	6.0	0.0	16.0	0.0	2.9	0.0	9.5	0.0
Cycle Queue Clear Time (g_c), s	6.0	0.0	16.0	0.0	2.9	0.0	9.5	0.0

Perm LT Sat Flow Rate (s_l), veh/h/ln	347.0	0.0	825.3	0.0	144.7	0.0	0.0	0.0
Shared LT Sat Flow (s_sh), veh/h/ln	0.0	0.0	0.0	0.0	0.0	0.0	0.0	0.0
Perm LT Eff. Green (g_p), s	81.3	0.0	24.3	0.0	80.0	0.0	0.0	0.0
Perm LT Serve Time (g_u), s	54.8	0.0	4.2	0.0	28.8	0.0	0.0	0.0
Perm LT Que Serve Time (g_ps), s	54.8	0.0	4.2	0.0	28.8	0.0	0.0	0.0
Time to First Blk (g_f), s	0.0	0.0	0.0	0.0	0.0	0.0	0.0	0.0
Serve Time pre Blk (g_fs), s	0.0	0.0	0.0	0.0	0.0	0.0	0.0	0.0
Proportion LT Inside Lane (P_L)	1.000	0.000	1.000	0.000	1.000	0.000	1.000	0.000
Lane Group Capacity (c), veh/h	263.6	0.0	279.4	0.0	142.6	0.0	302.1	0.0
Volume-to-Capacity Ratio (X)	0.878	0.000	1.412	0.000	0.618	0.000	0.788	0.000
Available Capacity (c_a), veh/h	263.6	0.0	279.4	0.0	182.7	0.0	713.4	0.0
Upstream Filter Factor (I)	1.000	0.000	1.000	0.000	1.000	0.000	1.000	0.000
Uniform Delay (d1), s/veh	26.1	0.0	46.3	0.0	29.4	0.0	62.5	0.0
Incremental Delay (d2), s/veh	26.8	0.0	205.5	0.0	4.3	0.0	4.6	0.0
Initial Queue Delay (d3), s/veh	0.0	0.0	0.0	0.0	0.0	0.0	0.0	0.0
Control Delay (d), s/veh	52.9	0.0	251.7	0.0	33.7	0.0	67.1	0.0
First-Term Queue (Q1), veh/ln	8.3	0.0	10.1	0.0	2.0	0.0	4.2	0.0
Second-Term Queue (Q2), veh/ln	2.0	0.0	15.9	0.0	0.2	0.0	0.2	0.0
Third-Term Queue (Q3), veh/ln	0.0	0.0	0.0	0.0	0.0	0.0	0.0	0.0
Percentile bk-of-que factor (f_B%)	1.000	0.000	1.000	0.000	1.000	0.000	1.000	0.000
Percentile Back of Queue (Q%), veh/ln	10.3	0.0	26.0	0.0	2.1	0.0	4.4	0.0
Percentile Storage Ratio (RQ%)	2.01	0.00	2.31	0.00	0.34	0.00	0.55	0.00
Initial Queue (Qb), veh	0.0	0.0	0.0	0.0	0.0	0.0	0.0	0.0
Final (Residual) Queue (Qe), veh	0.0	0.0	28.8	0.0	0.0	0.0	0.0	0.0
Saturated Delay (ds), s/veh	0.0	0.0	0.0	0.0	0.0	0.0	0.0	0.0
Saturated Queue (Qs), veh	0.0	0.0	0.0	0.0	0.0	0.0	0.0	0.0
Saturated Capacity (cs), veh/h	0.0	0.0	0.0	0.0	0.0	0.0	0.0	0.0
Initial Queue Clear Time (tc), h	0.0	0.0	0.4	0.0	0.0	0.0	0.0	0.0

Middle Lane Group Data								
Assigned Movement	0	2	0	4	0	6	0	8
Lane Assignment		T		T		T		T
Lanes in Group	0	3	0	3	0	3	0	3
Group Volume (v), veh/h	0.0	1504.3	0.0	587.0	0.0	2397.8	0.0	466.3
Group Sat. Flow (s), veh/h/ln	0.0	1695.1	0.0	1695.1	0.0	1695.1	0.0	1695.1
Queue Serve Time (g_s), s	0.0	25.2	0.0	15.7	0.0	52.4	0.0	11.7
Cycle Queue Clear Time (g_c), s	0.0	25.2	0.0	15.7	0.0	52.4	0.0	11.7
Lane Group Capacity (c), veh/h	0.0	2908.0	0.0	723.3	0.0	2950.3	0.0	858.6
Volume-to-Capacity Ratio (X)	0.000	0.517	0.000	0.811	0.000	0.813	0.000	0.543
Available Capacity (c_a), veh/h	0.0	2908.0	0.0	1090.5	0.0	2950.3	0.0	858.6
Upstream Filter Factor (I)	0.000	1.000	0.000	1.000	0.000	1.000	0.000	1.000
Uniform Delay (d1), s/veh	0.0	18.2	0.0	58.2	0.0	23.3	0.0	53.2
Incremental Delay (d2), s/veh	0.0	0.7	0.0	2.9	0.0	1.8	0.0	0.7
Initial Queue Delay (d3), s/veh	0.0	0.0	0.0	0.0	0.0	0.0	0.0	0.0
Control Delay (d), s/veh	0.0	18.9	0.0	61.0	0.0	25.2	0.0	53.9
First-Term Queue (Q1), veh/ln	0.0	9.8	0.0	6.7	0.0	20.3	0.0	5.0
Second-Term Queue (Q2), veh/ln	0.0	0.2	0.0	0.2	0.0	0.5	0.0	0.1
Third-Term Queue (Q3), veh/ln	0.0	0.0	0.0	0.0	0.0	0.0	0.0	0.0
Percentile bk-of-que factor (f_B%)	0.000	1.000	0.000	1.000	0.000	1.000	0.000	1.000
Percentile Back of Queue (Q%), veh/ln	0.0	10.0	0.0	6.9	0.0	20.8	0.0	5.1
Percentile Storage Ratio (RQ%)	0.00	0.59	0.00	0.39	0.00	0.75	0.00	0.37

Initial Queue (Qb), veh	0.0	0.0	0.0	0.0	0.0	0.0	0.0	0.0
Final (Residual) Queue (Qe), veh	0.0	0.0	0.0	0.0	0.0	0.0	0.0	0.0
Saturated Delay (ds), s/veh	0.0	0.0	0.0	0.0	0.0	0.0	0.0	0.0
Saturated Queue (Qs), veh	0.0	0.0	0.0	0.0	0.0	0.0	0.0	0.0
Saturated Capacity (cs), veh/h	0.0	0.0	0.0	0.0	0.0	0.0	0.0	0.0
Initial Queue Clear Time (tc), h	0.0	0.0	0.0	0.0	0.0	0.0	0.0	0.0

Right Lane Group Data								
Assigned Movement	0	12	0	14	0	16	0	18
Lane Assignment		R		R		R		R
Lanes in Group	0	1	0	1	0	2	0	1
Group Volume (v), veh/h	0.0	467.4	0.0	60.9	0.0	359.8	0.0	13.0
Group Sat. Flow (s), veh/h/ln	0.0	1583.3	0.0	1583.3	0.0	1393.3	0.0	1583.3
Queue Serve Time (g_s), s	0.0	18.4	0.0	4.6	0.0	6.9	0.0	0.9
Cycle Queue Clear Time (g_c), s	0.0	18.4	0.0	4.6	0.0	6.9	0.0	0.9
Prot RT Sat Flow Rate (s_R), veh/h/ln	0.0	1583.3	0.0	1583.3	0.0	1393.3	0.0	1583.3
Prot RT Eff. Green (g_R), s	0.0	16.0	0.0	4.8	0.0	12.3	0.0	6.0
Proportion RT Outside Lane (P_R)	0.000	1.000	0.000	1.000	0.000	1.000	0.000	1.000
Lane Group Capacity (c), veh/h	0.0	1086.5	0.0	280.0	0.0	1861.3	0.0	335.2
Volume-to-Capacity Ratio (X)	0.000	0.430	0.000	0.217	0.000	0.193	0.000	0.039
Available Capacity (c_a), veh/h	0.0	1086.5	0.0	394.3	0.0	1861.3	0.0	335.2
Upstream Filter Factor (I)	0.000	1.000	0.000	1.000	0.000	1.000	0.000	1.000
Uniform Delay (d1), s/veh	0.0	9.8	0.0	49.3	0.0	8.9	0.0	43.8
Incremental Delay (d2), s/veh	0.0	1.2	0.0	0.4	0.0	0.1	0.0	0.0
Initial Queue Delay (d3), s/veh	0.0	0.0	0.0	0.0	0.0	0.0	0.0	0.0
Control Delay (d), s/veh	0.0	11.0	0.0	49.7	0.0	8.9	0.0	43.9
First-Term Queue (Q1), veh/ln	0.0	6.2	0.0	1.8	0.0	2.1	0.0	0.4
Second-Term Queue (Q2), veh/ln	0.0	0.4	0.0	0.0	0.0	0.0	0.0	0.0
Third-Term Queue (Q3), veh/ln	0.0	0.0	0.0	0.0	0.0	0.0	0.0	0.0
Percentile bk-of-que factor (f_B%)	0.000	1.000	0.000	1.000	0.000	1.000	0.000	1.000
Percentile Back of Queue (Q%), veh/ln	0.0	6.5	0.0	1.9	0.0	2.1	0.0	0.4
Percentile Storage Ratio (RQ%)	0.00	0.83	0.00	0.24	0.00	0.26	0.00	0.05
Initial Queue (Qb), veh	0.0	0.0	0.0	0.0	0.0	0.0	0.0	0.0
Final (Residual) Queue (Qe), veh	0.0	0.0	0.0	0.0	0.0	0.0	0.0	0.0
Saturated Delay (ds), s/veh	0.0	0.0	0.0	0.0	0.0	0.0	0.0	0.0
Saturated Queue (Qs), veh	0.0	0.0	0.0	0.0	0.0	0.0	0.0	0.0
Saturated Capacity (cs), veh/h	0.0	0.0	0.0	0.0	0.0	0.0	0.0	0.0
Initial Queue Clear Time (tc), h	0.0	0.0	0.0	0.0	0.0	0.0	0.0	0.0

Intersection Summary	
HCM Average Control Delay	42.9
HCM Level of Service	D

Lane Group	EBT	WBT	NET
Lane Group Flow (vph)	57	52	2116
v/c Ratio	0.63	0.43	0.47
Control Delay	122.1	85.8	2.7
Queue Delay	0.0	0.0	0.0
Total Delay	122.1	85.8	2.7
Queue Length 50th (ft)	76	56	156
Queue Length 95th (ft)	135	110	219
Internal Link Dist (ft)	48	206	515
Turn Bay Length (ft)			
Base Capacity (vph)	208	271	4497
Starvation Cap Reductn	0	0	0
Spillback Cap Reductn	0	0	0
Storage Cap Reductn	0	0	0
Reduced v/c Ratio	0.27	0.19	0.47

Intersection Summary

Movement	EBL	EBT	EBR	WBL	WBT	WBR	NEL	NET	NER	SWL	SWT	SWR
Lane Configurations												
Volume (vph)	30	23	0	0	33	16	40	1895	33	0	0	0
Ideal Flow (vphpl)	1900	1900	1900	1900	1900	1900	1900	1900	1900	1900	1900	1900
Total Lost time (s)		5.0			5.0			5.0				
Lane Util. Factor		1.00			1.00			0.91				
Frt		1.00			0.96			1.00				
Flt Protected		0.97			1.00			1.00				
Satd. Flow (prot)		1812			1781			5068				
Flt Permitted		0.76			1.00			1.00				
Satd. Flow (perm)		1409			1781			5068				
Peak-hour factor, PHF	0.93	0.93	0.93	0.93	0.93	0.93	0.93	0.93	0.93	0.93	0.93	0.93
Adj. Flow (vph)	32	25	0	0	35	17	43	2038	35	0	0	0
RTOR Reduction (vph)	0	0	0	0	8	0	0	0	0	0	0	0
Lane Group Flow (vph)	0	57	0	0	44	0	0	2116	0	0	0	0
Turn Type	Perm	NA			NA		Split	NA				
Protected Phases		4			8		2	2				
Permitted Phases	4							2				
Actuated Green, G (s)		12.9			12.9			180.1				
Effective Green, g (s)		12.9			12.9			180.1				
Actuated g/C Ratio		0.06			0.06			0.89				
Clearance Time (s)		5.0			5.0			5.0				
Vehicle Extension (s)		3.0			3.0			3.0				
Lane Grp Cap (vph)		90			113			4496				
v/s Ratio Prot					0.02			c0.42				
v/s Ratio Perm		c0.04										
v/c Ratio		0.63			0.39			0.47				
Uniform Delay, d1		92.7			91.2			2.2				
Progression Factor		1.00			1.00			1.00				
Incremental Delay, d2		13.7			2.2			0.4				
Delay (s)		106.4			93.4			2.6				
Level of Service		F			F			A				
Approach Delay (s)		106.4			93.4			2.6			0.0	
Approach LOS		F			F			A			A	

Intersection Summary			
HCM Average Control Delay	7.4	HCM Level of Service	A
HCM Volume to Capacity ratio	0.48		
Actuated Cycle Length (s)	203.0	Sum of lost time (s)	10.0
Intersection Capacity Utilization	56.0%	ICU Level of Service	B
Analysis Period (min)	15		
c Critical Lane Group			

Movement	EBL	EBT	EBR	WBL	WBT	WBR	NEL	NET	NER	SWL	SWT	SWR
Lane Configurations												
Volume (vph)	30	23	0	0	33	16	40	1895	33	0	0	0
Movement Number	7	4	14	3	8	18	5	2	12	1	6	16
Initial Queue, veh	0	0	0	0	0	0	0	0	0	0	0	0
Ped-Bike Adj. Factor (A_pbT)	1.00		1.00	1.00		1.00	1.00		1.00	1.00		1.00
Parking, Bus Adj. Factors	1.00	1.00	1.00	1.00	1.00	1.00	1.00	1.00	1.00	1.00	1.00	1.00
Adj. Sat. Flow Rate, veh/h/ln	1863	1863	1900	1900	1863	1863	1863	1863	1863	1900	1900	1900
Lanes	0	1	0	0	1	0	0	3	0	0	0	0
Lane Assignment												
Capacity, veh/h	59	37	0	0	70	34	95	4782	86	0	0	0
Proportion Arriving On Green	0.06	0.06	0.00	0.00	0.06	0.06	0.89	0.89	0.89	0.00	0.00	0.00
Movement Delay, s/veh	99.3	0.0	0.0	0.0	0.0	96.0	2.9	2.6	2.6	0.0	0.0	0.0
Movement LOS	F					F	A	A	A			
Approach Volume, veh/h		57			53			2116			0	
Approach Delay, s/veh		99.3			96.0			2.7			0.0	
Approach LOS		F			F			A				

Timer:	1	2	3	4	5	6	7	8
Assigned Phase		2		4				8
Case No		12.0		8.0				8.0
Phase Duration (G+Y+Rc), s		185.00		16.87				16.87
Change Period (Y+Rc), s		5.00		5.00				5.00
Max. Allowable Headway (MAH), s		3.91		4.00				4.00
Maximum Green Setting (Gmax), s		180.00		30.00				30.00
Max. Queue Clearance Time (g_c+I1), s		16.85		11.64				7.86
Green Extension Time (g_e), s		12.35		0.26				0.28
Probability of Phase Call (p_c)		1.000		0.998				0.998
Probability of Max Out (p_x)		0.000		0.000				0.000

Left-Turn Movement Data				
Assigned Movement		5		7
Mvmt. Sat Flow, veh/h		106.37		651.18

Through Movement Data				
Assigned Movement		2		4				8
Mvmt. Sat Flow, veh/h		5363.24		499.24				1186.15

Right-Turn Movement Data				
Assigned Movement		12		14				18
Mvmt. Sat Flow, veh/h		96.31		0.00				575.10

Left Lane Group Data								
Assigned Movement	0	5	0	7	0	0	0	0
Lane Assignment		L+T		L+T				
Lanes in Group	0	1	0	1	0	0	0	0
Group Volume (v), veh/h	0.0	751.1	0.0	57.0	0.0	0.0	0.0	0.0
Group Sat. Flow (s), veh/h/ln	0.0	1857.4	0.0	1150.4	0.0	0.0	0.0	0.0
Queue Serve Time (g_s), s	0.0	14.8	0.0	3.8	0.0	0.0	0.0	0.0
Cycle Queue Clear Time (g_c), s	0.0	14.8	0.0	9.6	0.0	0.0	0.0	0.0

Perm LT Sat Flow Rate (s_l), veh/h/ln	0.0	0.0	0.0	773.9	0.0	0.0	0.0	0.0
Shared LT Sat Flow (s_sh), veh/h/ln	0.0	0.0	0.0	1099.5	0.0	0.0	0.0	0.0
Perm LT Eff. Green (g_p), s	0.0	0.0	0.0	11.9	0.0	0.0	0.0	0.0
Perm LT Serve Time (g_u), s	0.0	0.0	0.0	6.0	0.0	0.0	0.0	0.0
Perm LT Que Serve Time (g_ps), s	0.0	0.0	0.0	3.8	0.0	0.0	0.0	0.0
Time to First Blk (g_f), s	0.0	0.0	0.0	1.4	0.0	0.0	0.0	11.9
Serve Time pre Blk (g_fs), s	0.0	0.0	0.0	1.4	0.0	0.0	0.0	0.0
Proportion LT Inside Lane (P_L)	0.000	0.057	0.000	0.566	0.000	0.000	0.000	0.000
Lane Group Capacity (c), veh/h	0.0	1656.2	0.0	95.6	0.0	0.0	0.0	0.0
Volume-to-Capacity Ratio (X)	0.000	0.453	0.000	0.596	0.000	0.000	0.000	0.000
Available Capacity (c_a), veh/h	0.0	1656.2	0.0	187.3	0.0	0.0	0.0	0.0
Upstream Filter Factor (I)	0.000	1.000	0.000	1.000	0.000	0.000	0.000	0.000
Uniform Delay (d1), s/veh	0.0	2.0	0.0	93.5	0.0	0.0	0.0	0.0
Incremental Delay (d2), s/veh	0.0	0.9	0.0	5.8	0.0	0.0	0.0	0.0
Initial Queue Delay (d3), s/veh	0.0	0.0	0.0	0.0	0.0	0.0	0.0	0.0
Control Delay (d), s/veh	0.0	2.9	0.0	99.3	0.0	0.0	0.0	0.0
First-Term Queue (Q1), veh/ln	0.0	4.0	0.0	3.1	0.0	0.0	0.0	0.0
Second-Term Queue (Q2), veh/ln	0.0	0.4	0.0	0.2	0.0	0.0	0.0	0.0
Third-Term Queue (Q3), veh/ln	0.0	0.0	0.0	0.0	0.0	0.0	0.0	0.0
Percentile bk-of-que factor (f_B%)	0.000	1.000	0.000	1.000	0.000	0.000	0.000	0.000
Percentile Back of Queue (Q%), veh/ln	0.0	4.4	0.0	3.3	0.0	0.0	0.0	0.0
Percentile Storage Ratio (RQ%)	0.00	0.21	0.00	0.77	0.00	0.00	0.00	0.00
Initial Queue (Qb), veh	0.0	0.0	0.0	0.0	0.0	0.0	0.0	0.0
Final (Residual) Queue (Qe), veh	0.0	0.0	0.0	0.0	0.0	0.0	0.0	0.0
Saturated Delay (ds), s/veh	0.0	0.0	0.0	0.0	0.0	0.0	0.0	0.0
Saturated Queue (Qs), veh	0.0	0.0	0.0	0.0	0.0	0.0	0.0	0.0
Saturated Capacity (cs), veh/h	0.0	0.0	0.0	0.0	0.0	0.0	0.0	0.0
Initial Queue Clear Time (tc), h	0.0	0.0	0.0	0.0	0.0	0.0	0.0	0.0
Middle Lane Group Data								
Assigned Movement	0	2	0	4	0	0	0	8
Lane Assignment		T						
Lanes in Group	0	1	0	0	0	0	0	0
Group Volume (v), veh/h	0.0	685.0	0.0	0.0	0.0	0.0	0.0	0.0
Group Sat. Flow (s), veh/h/ln	0.0	1862.7	0.0	0.0	0.0	0.0	0.0	0.0
Queue Serve Time (g_s), s	0.0	12.7	0.0	0.0	0.0	0.0	0.0	0.0
Cycle Queue Clear Time (g_c), s	0.0	12.7	0.0	0.0	0.0	0.0	0.0	0.0
Lane Group Capacity (c), veh/h	0.0	1660.9	0.0	0.0	0.0	0.0	0.0	0.0
Volume-to-Capacity Ratio (X)	0.000	0.412	0.000	0.000	0.000	0.000	0.000	0.000
Available Capacity (c_a), veh/h	0.0	1660.9	0.0	0.0	0.0	0.0	0.0	0.0
Upstream Filter Factor (I)	0.000	1.000	0.000	0.000	0.000	0.000	0.000	0.000
Uniform Delay (d1), s/veh	0.0	1.9	0.0	0.0	0.0	0.0	0.0	0.0
Incremental Delay (d2), s/veh	0.0	0.8	0.0	0.0	0.0	0.0	0.0	0.0
Initial Queue Delay (d3), s/veh	0.0	0.0	0.0	0.0	0.0	0.0	0.0	0.0
Control Delay (d), s/veh	0.0	2.6	0.0	0.0	0.0	0.0	0.0	0.0
First-Term Queue (Q1), veh/ln	0.0	3.5	0.0	0.0	0.0	0.0	0.0	0.0
Second-Term Queue (Q2), veh/ln	0.0	0.3	0.0	0.0	0.0	0.0	0.0	0.0
Third-Term Queue (Q3), veh/ln	0.0	0.0	0.0	0.0	0.0	0.0	0.0	0.0
Percentile bk-of-que factor (f_B%)	0.000	1.000	0.000	1.000	0.000	0.000	0.000	1.000
Percentile Back of Queue (Q%), veh/ln	0.0	3.8	0.0	0.0	0.0	0.0	0.0	0.0
Percentile Storage Ratio (RQ%)	0.00	0.18	0.00	0.00	0.00	0.00	0.00	0.00

Initial Queue (Qb), veh	0.0	0.0	0.0	0.0	0.0	0.0	0.0	0.0
Final (Residual) Queue (Qe), veh	0.0	0.0	0.0	0.0	0.0	0.0	0.0	0.0
Saturated Delay (ds), s/veh	0.0	0.0	0.0	0.0	0.0	0.0	0.0	0.0
Saturated Queue (Qs), veh	0.0	0.0	0.0	0.0	0.0	0.0	0.0	0.0
Saturated Capacity (cs), veh/h	0.0	0.0	0.0	0.0	0.0	0.0	0.0	0.0
Initial Queue Clear Time (tc), h	0.0	0.0	0.0	0.0	0.0	0.0	0.0	0.0
Right Lane Group Data								
Assigned Movement	0	12	0	14	0	0	0	18
Lane Assignment		T+R						T+R
Lanes in Group	0	1	0	0	0	0	0	1
Group Volume (v), veh/h	0.0	680.0	0.0	0.0	0.0	0.0	0.0	52.7
Group Sat. Flow (s), veh/h/ln	0.0	1845.7	0.0	0.0	0.0	0.0	0.0	1761.3
Queue Serve Time (g_s), s	0.0	12.8	0.0	0.0	0.0	0.0	0.0	5.9
Cycle Queue Clear Time (g_c), s	0.0	12.8	0.0	0.0	0.0	0.0	0.0	5.9
Prot RT Sat Flow Rate (s_R), veh/h/ln	0.0	0.0	0.0	0.0	0.0	0.0	0.0	0.0
Prot RT Eff. Green (g_R), s	0.0	0.0	0.0	0.0	0.0	0.0	0.0	0.0
Proportion RT Outside Lane (P_R)	0.000	0.052	0.000	0.000	0.000	0.000	0.000	0.327
Lane Group Capacity (c), veh/h	0.0	1645.8	0.0	0.0	0.0	0.0	0.0	103.6
Volume-to-Capacity Ratio (X)	0.000	0.413	0.000	0.000	0.000	0.000	0.000	0.509
Available Capacity (c_a), veh/h	0.0	1645.8	0.0	0.0	0.0	0.0	0.0	261.7
Upstream Filter Factor (I)	0.000	1.000	0.000	0.000	0.000	0.000	0.000	1.000
Uniform Delay (d1), s/veh	0.0	1.9	0.0	0.0	0.0	0.0	0.0	92.2
Incremental Delay (d2), s/veh	0.0	0.8	0.0	0.0	0.0	0.0	0.0	3.8
Initial Queue Delay (d3), s/veh	0.0	0.0	0.0	0.0	0.0	0.0	0.0	0.0
Control Delay (d), s/veh	0.0	2.6	0.0	0.0	0.0	0.0	0.0	96.0
First-Term Queue (Q1), veh/ln	0.0	3.4	0.0	0.0	0.0	0.0	0.0	2.7
Second-Term Queue (Q2), veh/ln	0.0	0.4	0.0	0.0	0.0	0.0	0.0	0.1
Third-Term Queue (Q3), veh/ln	0.0	0.0	0.0	0.0	0.0	0.0	0.0	0.0
Percentile bk-of-que factor (f_B%)	0.000	1.000	0.000	1.000	0.000	0.000	0.000	1.000
Percentile Back of Queue (Q%), veh/ln	0.0	3.8	0.0	0.0	0.0	0.0	0.0	2.8
Percentile Storage Ratio (RQ%)	0.00	0.18	0.00	0.00	0.00	0.00	0.00	0.32
Initial Queue (Qb), veh	0.0	0.0	0.0	0.0	0.0	0.0	0.0	0.0
Final (Residual) Queue (Qe), veh	0.0	0.0	0.0	0.0	0.0	0.0	0.0	0.0
Saturated Delay (ds), s/veh	0.0	0.0	0.0	0.0	0.0	0.0	0.0	0.0
Saturated Queue (Qs), veh	0.0	0.0	0.0	0.0	0.0	0.0	0.0	0.0
Saturated Capacity (cs), veh/h	0.0	0.0	0.0	0.0	0.0	0.0	0.0	0.0
Initial Queue Clear Time (tc), h	0.0	0.0	0.0	0.0	0.0	0.0	0.0	0.0
Intersection Summary								
HCM Average Control Delay		7.4						
HCM Level of Service		A						

Lane Group	EBT	WBT	NET
Lane Group Flow (vph)	30	99	2231
v/c Ratio	0.16	0.52	0.52
Control Delay	44.2	54.5	4.1
Queue Delay	0.0	0.0	0.3
Total Delay	44.2	54.5	4.4
Queue Length 50th (ft)	20	67	153
Queue Length 95th (ft)	46	113	221
Internal Link Dist (ft)	164	208	477
Turn Bay Length (ft)			
Base Capacity (vph)	349	349	4254
Starvation Cap Reductn	0	0	1147
Spillback Cap Reductn	0	0	0
Storage Cap Reductn	0	0	0
Reduced v/c Ratio	0.09	0.28	0.72

Intersection Summary

Movement	EBL	EBT	EBR	WBL	WBT	WBR	NEL	NET	NER	SWL	SWT	SWR
Lane Configurations												
Volume (vph)	0	27	0	0	90	0	1	2013	16	0	0	0
Ideal Flow (vphpl)	1900	1900	1900	1900	1900	1900	1900	1900	1900	1900	1900	1900
Total Lost time (s)		5.0			5.0			5.0				
Lane Util. Factor		1.00			1.00			0.91				
Frt		1.00			1.00			1.00				
Flt Protected		1.00			1.00			1.00				
Satd. Flow (prot)		1863			1863			5079				
Flt Permitted		1.00			1.00			1.00				
Satd. Flow (perm)		1863			1863			5079				
Peak-hour factor, PHF	0.91	0.91	0.91	0.91	0.91	0.91	0.91	0.91	0.91	0.91	0.91	0.91
Adj. Flow (vph)	0	30	0	0	99	0	1	2212	18	0	0	0
RTOR Reduction (vph)	0	0	0	0	0	0	0	1	0	0	0	0
Lane Group Flow (vph)	0	30	0	0	99	0	0	2230	0	0	0	0
Turn Type	Perm	NA			NA		Perm	NA				
Protected Phases		4			8			2				
Permitted Phases	4						2					
Actuated Green, G (s)		9.5			9.5			88.5				
Effective Green, g (s)		9.5			9.5			88.5				
Actuated g/C Ratio		0.09			0.09			0.82				
Clearance Time (s)		5.0			5.0			5.0				
Vehicle Extension (s)		3.0			3.0			3.0				
Lane Grp Cap (vph)		164			164			4162				
v/s Ratio Prot		0.02			c0.05							
v/s Ratio Perm								0.44				
v/c Ratio		0.18			0.60			0.54				
Uniform Delay, d1		45.7			47.4			3.1				
Progression Factor		1.00			1.00			1.00				
Incremental Delay, d2		0.5			6.1			0.5				
Delay (s)		46.2			53.6			3.6				
Level of Service		D			D			A				
Approach Delay (s)		46.2			53.6			3.6			0.0	
Approach LOS		D			D			A			A	

Intersection Summary			
HCM Average Control Delay	6.3	HCM Level of Service	A
HCM Volume to Capacity ratio	0.54		
Actuated Cycle Length (s)	108.0	Sum of lost time (s)	10.0
Intersection Capacity Utilization	52.3%	ICU Level of Service	A
Analysis Period (min)	15		
c Critical Lane Group			

Movement	EBL	EBT	EBR	WBL	WBT	WBR	NEL	NET	NER	SWL	SWT	SWR
Lane Configurations												
Volume (vph)	0	27	0	0	90	0	1	2013	16	0	0	0
Movement Number	7	4	14	3	8	18	5	2	12	1	6	16
Initial Queue, veh	0	0	0	0	0	0	0	0	0	0	0	0
Ped-Bike Adj. Factor (A_pbT)	1.00		1.00	1.00		1.00	1.00		1.00	1.00		1.00
Parking, Bus Adj. Factors	1.00	1.00	1.00	1.00	1.00	1.00	1.00	1.00	1.00	1.00	1.00	1.00
Adj. Sat. Flow Rate, veh/h/ln	1900	1863	1900	1900	1863	1900	1863	1863	1863	1900	1900	1900
Lanes	0	1	0	0	1	0	0	3	0	0	0	0
Lane Assignment												
Capacity, veh/h	33	136	0	0	136	0	37	4147	33	0	0	0
Proportion Arriving On Green	0.00	0.07	0.00	0.00	0.07	0.00	0.82	0.82	0.82	0.00	0.00	0.00
Movement Delay, s/veh	0.0	43.2	0.0	0.0	51.3	0.0	4.9	4.1	4.2	0.0	0.0	0.0
Movement LOS		D			D		A	A	A			
Approach Volume, veh/h		30			99			2231			0	
Approach Delay, s/veh		43.2			51.3			4.4			0.0	
Approach LOS		D			D			A				

Timer:	1	2	3	4	5	6	7	8
Assigned Phase		2		4				8
Case No		8.0		8.0				8.0
Phase Duration (G+Y+Rc), s		85.00		12.07				12.07
Change Period (Y+Rc), s		5.00		5.00				5.00
Max. Allowable Headway (MAH), s		3.91		3.90				3.90
Maximum Green Setting (Gmax), s		80.00		20.00				20.00
Max. Queue Clearance Time (g_c+I1), s		82.00		3.46				7.05
Green Extension Time (g_e), s		0.00		0.29				0.25
Probability of Phase Call (p_c)		1.000		0.969				0.969
Probability of Max Out (p_x)		1.000		0.000				0.000

Left-Turn Movement Data		
Assigned Movement	5	7
Mvmt. Sat Flow, veh/h	2.50	0.00

Through Movement Data			
Assigned Movement	2	4	8
Mvmt. Sat Flow, veh/h	5029.65	1862.75	1862.75

Right-Turn Movement Data		
Assigned Movement	12	14	18
Mvmt. Sat Flow, veh/h	39.95	0.00	0.00

Left Lane Group Data								
Assigned Movement	0	5	0	7	0	0	0	0
Lane Assignment		L+T						
Lanes in Group	0	1	0	0	0	0	0	0
Group Volume (v), veh/h	0.0	742.5	0.0	0.0	0.0	0.0	0.0	0.0
Group Sat. Flow (s), veh/h/ln	0.0	1688.9	0.0	0.0	0.0	0.0	0.0	0.0
Queue Serve Time (g_s), s	0.0	0.0	0.0	0.0	0.0	0.0	0.0	0.0
Cycle Queue Clear Time (g_c), s	0.0	80.0	0.0	0.0	0.0	0.0	0.0	0.0

Perm LT Sat Flow Rate (s_l), veh/h/ln	0.0	800.0	0.0	0.0	0.0	0.0	0.0	0.0
Shared LT Sat Flow (s_sh), veh/h/ln	0.0	0.0	0.0	1862.7	0.0	0.0	0.0	0.0
Perm LT Eff. Green (g_p), s	0.0	80.0	0.0	0.0	0.0	0.0	0.0	0.0
Perm LT Serve Time (g_u), s	0.0	0.0	0.0	0.0	0.0	0.0	0.0	0.0
Perm LT Que Serve Time (g_ps), s	0.0	0.0	0.0	0.0	0.0	0.0	0.0	0.0
Time to First Blk (g_f), s	0.0	72.5	0.0	7.1	0.0	0.0	0.0	7.1
Serve Time pre Blk (g_fs), s	0.0	13.0	0.0	0.0	0.0	0.0	0.0	0.0
Proportion LT Inside Lane (P_L)	0.000	0.001	0.000	0.000	0.000	0.000	0.000	0.000
Lane Group Capacity (c), veh/h	0.0	1429.0	0.0	0.0	0.0	0.0	0.0	0.0
Volume-to-Capacity Ratio (X)	0.000	0.520	0.000	0.000	0.000	0.000	0.000	0.000
Available Capacity (c_a), veh/h	0.0	1429.0	0.0	0.0	0.0	0.0	0.0	0.0
Upstream Filter Factor (I)	0.000	1.000	0.000	0.000	0.000	0.000	0.000	0.000
Uniform Delay (d1), s/veh	0.0	3.6	0.0	0.0	0.0	0.0	0.0	0.0
Incremental Delay (d2), s/veh	0.0	1.4	0.0	0.0	0.0	0.0	0.0	0.0
Initial Queue Delay (d3), s/veh	0.0	0.0	0.0	0.0	0.0	0.0	0.0	0.0
Control Delay (d), s/veh	0.0	4.9	0.0	0.0	0.0	0.0	0.0	0.0
First-Term Queue (Q1), veh/ln	0.0	3.2	0.0	0.0	0.0	0.0	0.0	0.0
Second-Term Queue (Q2), veh/ln	0.0	0.5	0.0	0.0	0.0	0.0	0.0	0.0
Third-Term Queue (Q3), veh/ln	0.0	0.0	0.0	0.0	0.0	0.0	0.0	0.0
Percentile bk-of-que factor (f_B%)	0.000	1.000	0.000	1.000	0.000	0.000	0.000	0.000
Percentile Back of Queue (Q%), veh/ln	0.0	3.7	0.0	0.0	0.0	0.0	0.0	0.0
Percentile Storage Ratio (RQ%)	0.00	0.20	0.00	0.00	0.00	0.00	0.00	0.00
Initial Queue (Qb), veh	0.0	0.0	0.0	0.0	0.0	0.0	0.0	0.0
Final (Residual) Queue (Qe), veh	0.0	0.0	0.0	0.0	0.0	0.0	0.0	0.0
Saturated Delay (ds), s/veh	0.0	0.0	0.0	0.0	0.0	0.0	0.0	0.0
Saturated Queue (Qs), veh	0.0	0.0	0.0	0.0	0.0	0.0	0.0	0.0
Saturated Capacity (cs), veh/h	0.0	0.0	0.0	0.0	0.0	0.0	0.0	0.0
Initial Queue Clear Time (tc), h	0.0	0.0	0.0	0.0	0.0	0.0	0.0	0.0
Middle Lane Group Data								
Assigned Movement	0	2	0	4	0	0	0	8
Lane Assignment		T		T				T
Lanes in Group	0	1	0	1	0	0	0	1
Group Volume (v), veh/h	0.0	745.2	0.0	29.7	0.0	0.0	0.0	98.9
Group Sat. Flow (s), veh/h/ln	0.0	1695.1	0.0	1862.7	0.0	0.0	0.0	1862.7
Queue Serve Time (g_s), s	0.0	13.4	0.0	1.5	0.0	0.0	0.0	5.0
Cycle Queue Clear Time (g_c), s	0.0	13.4	0.0	1.5	0.0	0.0	0.0	5.0
Lane Group Capacity (c), veh/h	0.0	1397.0	0.0	135.7	0.0	0.0	0.0	135.7
Volume-to-Capacity Ratio (X)	0.000	0.533	0.000	0.219	0.000	0.000	0.000	0.729
Available Capacity (c_a), veh/h	0.0	1397.0	0.0	383.8	0.0	0.0	0.0	383.8
Upstream Filter Factor (I)	0.000	1.000	0.000	1.000	0.000	0.000	0.000	1.000
Uniform Delay (d1), s/veh	0.0	2.7	0.0	42.4	0.0	0.0	0.0	44.1
Incremental Delay (d2), s/veh	0.0	1.5	0.0	0.8	0.0	0.0	0.0	7.3
Initial Queue Delay (d3), s/veh	0.0	0.0	0.0	0.0	0.0	0.0	0.0	0.0
Control Delay (d), s/veh	0.0	4.1	0.0	43.2	0.0	0.0	0.0	51.3
First-Term Queue (Q1), veh/ln	0.0	2.5	0.0	0.7	0.0	0.0	0.0	2.3
Second-Term Queue (Q2), veh/ln	0.0	0.6	0.0	0.0	0.0	0.0	0.0	0.3
Third-Term Queue (Q3), veh/ln	0.0	0.0	0.0	0.0	0.0	0.0	0.0	0.0
Percentile bk-of-que factor (f_B%)	0.000	1.000	0.000	1.000	0.000	0.000	0.000	1.000
Percentile Back of Queue (Q%), veh/ln	0.0	3.0	0.0	0.7	0.0	0.0	0.0	2.6
Percentile Storage Ratio (RQ%)	0.00	0.16	0.00	0.08	0.00	0.00	0.00	0.29

Initial Queue (Qb), veh	0.0	0.0	0.0	0.0	0.0	0.0	0.0	0.0
Final (Residual) Queue (Qe), veh	0.0	0.0	0.0	0.0	0.0	0.0	0.0	0.0
Saturated Delay (ds), s/veh	0.0	0.0	0.0	0.0	0.0	0.0	0.0	0.0
Saturated Queue (Qs), veh	0.0	0.0	0.0	0.0	0.0	0.0	0.0	0.0
Saturated Capacity (cs), veh/h	0.0	0.0	0.0	0.0	0.0	0.0	0.0	0.0
Initial Queue Clear Time (tc), h	0.0	0.0	0.0	0.0	0.0	0.0	0.0	0.0
Right Lane Group Data								
Assigned Movement	0	12	0	14	0	0	0	18
Lane Assignment		T+R						
Lanes in Group	0	1	0	0	0	0	0	0
Group Volume (v), veh/h	0.0	743.0	0.0	0.0	0.0	0.0	0.0	0.0
Group Sat. Flow (s), veh/h/ln	0.0	1688.0	0.0	0.0	0.0	0.0	0.0	0.0
Queue Serve Time (g_s), s	0.0	13.4	0.0	0.0	0.0	0.0	0.0	0.0
Cycle Queue Clear Time (g_c), s	0.0	13.4	0.0	0.0	0.0	0.0	0.0	0.0
Prot RT Sat Flow Rate (s_R), veh/h/ln	0.0	0.0	0.0	0.0	0.0	0.0	0.0	0.0
Prot RT Eff. Green (g_R), s	0.0	0.0	0.0	0.0	0.0	0.0	0.0	0.0
Proportion RT Outside Lane (P_R)	0.000	0.024	0.000	0.000	0.000	0.000	0.000	0.000
Lane Group Capacity (c), veh/h	0.0	1391.2	0.0	0.0	0.0	0.0	0.0	0.0
Volume-to-Capacity Ratio (X)	0.000	0.534	0.000	0.000	0.000	0.000	0.000	0.000
Available Capacity (c_a), veh/h	0.0	1391.2	0.0	0.0	0.0	0.0	0.0	0.0
Upstream Filter Factor (I)	0.000	1.000	0.000	0.000	0.000	0.000	0.000	0.000
Uniform Delay (d1), s/veh	0.0	2.7	0.0	0.0	0.0	0.0	0.0	0.0
Incremental Delay (d2), s/veh	0.0	1.5	0.0	0.0	0.0	0.0	0.0	0.0
Initial Queue Delay (d3), s/veh	0.0	0.0	0.0	0.0	0.0	0.0	0.0	0.0
Control Delay (d), s/veh	0.0	4.2	0.0	0.0	0.0	0.0	0.0	0.0
First-Term Queue (Q1), veh/ln	0.0	2.5	0.0	0.0	0.0	0.0	0.0	0.0
Second-Term Queue (Q2), veh/ln	0.0	0.6	0.0	0.0	0.0	0.0	0.0	0.0
Third-Term Queue (Q3), veh/ln	0.0	0.0	0.0	0.0	0.0	0.0	0.0	0.0
Percentile bk-of-que factor (f_B%)	0.000	1.000	0.000	1.000	0.000	0.000	0.000	1.000
Percentile Back of Queue (Q%), veh/ln	0.0	3.0	0.0	0.0	0.0	0.0	0.0	0.0
Percentile Storage Ratio (RQ%)	0.00	0.16	0.00	0.00	0.00	0.00	0.00	0.00
Initial Queue (Qb), veh	0.0	0.0	0.0	0.0	0.0	0.0	0.0	0.0
Final (Residual) Queue (Qe), veh	0.0	0.0	0.0	0.0	0.0	0.0	0.0	0.0
Saturated Delay (ds), s/veh	0.0	0.0	0.0	0.0	0.0	0.0	0.0	0.0
Saturated Queue (Qs), veh	0.0	0.0	0.0	0.0	0.0	0.0	0.0	0.0
Saturated Capacity (cs), veh/h	0.0	0.0	0.0	0.0	0.0	0.0	0.0	0.0
Initial Queue Clear Time (tc), h	0.0	0.0	0.0	0.0	0.0	0.0	0.0	0.0
Intersection Summary								
HCM Average Control Delay		6.9						
HCM Level of Service		A						

Movement	EBL	EBR	NBL	NBT	SBT	SBR
Lane Configurations						
Volume (veh/h)	1	1	6	283	237	2
Sign Control	Stop			Free	Free	
Grade	0%			0%	0%	
Peak Hour Factor	0.92	0.92	0.92	0.92	0.92	0.92
Hourly flow rate (vph)	1	1	7	308	258	2
Pedestrians						
Lane Width (ft)						
Walking Speed (ft/s)						
Percent Blockage						
Right turn flare (veh)						
Median type				None	None	
Median storage veh)						
Upstream signal (ft)				296		
pX, platoon unblocked						
vC, conflicting volume	579	259	260			
vC1, stage 1 conf vol						
vC2, stage 2 conf vol						
vCu, unblocked vol	579	259	260			
tC, single (s)	6.4	6.2	4.1			
tC, 2 stage (s)						
tF (s)	3.5	3.3	2.2			
p0 queue free %	100	100	100			
cM capacity (veh/h)	475	780	1305			

Direction, Lane #	EB 1	NB 1	SB 1
Volume Total	2	314	260
Volume Left	1	7	0
Volume Right	1	0	2
cSH	590	1305	1700
Volume to Capacity	0.00	0.00	0.15
Queue Length 95th (ft)	0	0	0
Control Delay (s)	11.1	0.2	0.0
Lane LOS	B	A	
Approach Delay (s)	11.1	0.2	0.0
Approach LOS	B		

Intersection Summary			
Average Delay	0.2		
Intersection Capacity Utilization	29.7%	ICU Level of Service	A
Analysis Period (min)	15		

Movement	EBL	EBR	NBL	NBT	SBT	SBR
Lane Configurations						
Volume (veh/h)	8	2	9	279	244	239
Sign Control	Stop			Free	Free	
Grade	0%			0%	0%	
Peak Hour Factor	0.92	0.92	0.92	0.92	0.92	0.92
Hourly flow rate (vph)	9	2	10	303	265	260
Pedestrians						
Lane Width (ft)						
Walking Speed (ft/s)						
Percent Blockage						
Right turn flare (veh)						
Median type				None	None	
Median storage veh)						
Upstream signal (ft)				581		
pX, platoon unblocked						
vC, conflicting volume	718	395	525			
vC1, stage 1 conf vol						
vC2, stage 2 conf vol						
vCu, unblocked vol	718	395	525			
tC, single (s)	6.4	6.2	4.1			
tC, 2 stage (s)						
tF (s)	3.5	3.3	2.2			
p0 queue free %	98	100	99			
cM capacity (veh/h)	392	654	1042			

Direction, Lane #	EB 1	NB 1	SB 1
Volume Total	11	313	525
Volume Left	9	10	0
Volume Right	2	0	260
cSH	426	1042	1700
Volume to Capacity	0.03	0.01	0.31
Queue Length 95th (ft)	2	1	0
Control Delay (s)	13.7	0.4	0.0
Lane LOS	B	A	
Approach Delay (s)	13.7	0.4	0.0
Approach LOS	B		

Intersection Summary			
Average Delay	0.3		
Intersection Capacity Utilization	37.5%	ICU Level of Service	A
Analysis Period (min)	15		

Movement	EBL	EBR	NBL	NBT	SBT	SBR
Lane Configurations						
Volume (veh/h)	20	18	29	250	200	2
Sign Control	Stop			Free	Free	
Grade	0%			0%	0%	
Peak Hour Factor	0.92	0.92	0.92	0.92	0.92	0.92
Hourly flow rate (vph)	22	20	32	272	217	2
Pedestrians						
Lane Width (ft)						
Walking Speed (ft/s)						
Percent Blockage						
Right turn flare (veh)						
Median type				None	None	
Median storage veh)						
Upstream signal (ft)				866		
pX, platoon unblocked						
vC, conflicting volume	553	218	220			
vC1, stage 1 conf vol						
vC2, stage 2 conf vol						
vCu, unblocked vol	553	218	220			
tC, single (s)	6.4	6.2	4.1			
tC, 2 stage (s)						
tF (s)	3.5	3.3	2.2			
p0 queue free %	95	98	98			
cM capacity (veh/h)	482	821	1350			

Direction, Lane #	EB 1	NB 1	SB 1
Volume Total	41	303	220
Volume Left	22	32	0
Volume Right	20	0	2
cSH	600	1350	1700
Volume to Capacity	0.07	0.02	0.13
Queue Length 95th (ft)	6	2	0
Control Delay (s)	11.4	1.0	0.0
Lane LOS	B	A	
Approach Delay (s)	11.4	1.0	0.0
Approach LOS	B		

Intersection Summary			
Average Delay	1.4		
Intersection Capacity Utilization	38.7%	ICU Level of Service	A
Analysis Period (min)	15		

Movement	EBL	EBR	NBL	NBT	SBT	SBR
Lane Configurations						
Volume (veh/h)	28	30	39	206	133	33
Sign Control	Stop			Free	Free	
Grade	0%			0%	0%	
Peak Hour Factor	0.92	0.92	0.92	0.92	0.92	0.92
Hourly flow rate (vph)	30	33	42	224	145	36
Pedestrians						
Lane Width (ft)						
Walking Speed (ft/s)						
Percent Blockage						
Right turn flare (veh)						
Median type				None	None	
Median storage veh)						
Upstream signal (ft)						
pX, platoon unblocked						
vC, conflicting volume	471	162	180			
vC1, stage 1 conf vol						
vC2, stage 2 conf vol						
vCu, unblocked vol	471	162	180			
tC, single (s)	6.4	6.2	4.1			
tC, 2 stage (s)						
tF (s)	3.5	3.3	2.2			
p0 queue free %	94	96	97			
cM capacity (veh/h)	534	882	1395			

Direction, Lane #	EB 1	NB 1	SB 1
Volume Total	63	266	180
Volume Left	30	42	0
Volume Right	33	0	36
cSH	671	1395	1700
Volume to Capacity	0.09	0.03	0.11
Queue Length 95th (ft)	8	2	0
Control Delay (s)	10.9	1.4	0.0
Lane LOS	B	A	
Approach Delay (s)	10.9	1.4	0.0
Approach LOS	B		

Intersection Summary			
Average Delay	2.1		
Intersection Capacity Utilization	35.4%	ICU Level of Service	A
Analysis Period (min)	15		

Movement	EBL	EBT	EBR	WBL	WBT	WBR	NBL	NBT	NBR	SBL	SBT	SBR
Lane Configurations												
Sign Control		Stop			Stop			Stop			Stop	
Volume (vph)	3	109	67	40	152	1	31	203	26	2	1	4
Peak Hour Factor	0.92	0.92	0.92	0.92	0.92	0.92	0.92	0.92	0.92	0.92	0.92	0.92
Hourly flow rate (vph)	3	118	73	43	165	1	34	221	28	2	1	4

Direction, Lane #	EB 1	WB 1	NB 1	SB 1
Volume Total (vph)	195	210	283	8
Volume Left (vph)	3	43	34	2
Volume Right (vph)	73	1	28	4
Hadj (s)	-0.19	0.07	0.00	-0.25
Departure Headway (s)	4.8	5.0	4.9	5.1
Degree Utilization, x	0.26	0.29	0.39	0.01
Capacity (veh/h)	703	678	693	619
Control Delay (s)	9.4	10.0	11.0	8.1
Approach Delay (s)	9.4	10.0	11.0	8.1
Approach LOS	A	B	B	A

Intersection Summary			
Delay	10.2		
HCM Level of Service	B		
Intersection Capacity Utilization	45.6%	ICU Level of Service	A
Analysis Period (min)	15		

HCM Unsignalized Intersection Capacity Analysis
1: SW 97th Ave. & SW 174th St.

2/18/2015

Movement	EBL	EBT	EBR	WBL	WBT	WBR	NBL	NBT	NBR	SBL	SBT	SBR
Lane Configurations												
Sign Control		Stop			Stop			Stop			Stop	
Volume (vph)	4	145	30	53	197	0	25	24	12	89	210	8
Peak Hour Factor	0.84	0.84	0.84	0.84	0.84	0.84	0.84	0.84	0.84	0.84	0.84	0.84
Hourly flow rate (vph)	5	173	36	63	235	0	30	29	14	106	250	10

Direction, Lane #	EB 1	WB 1	NB 1	SB 1
Volume Total (vph)	213	298	73	365
Volume Left (vph)	5	63	30	106
Volume Right (vph)	36	0	14	10
Hadj (s)	-0.06	0.08	0.00	0.08
Departure Headway (s)	5.7	5.7	6.1	5.6
Degree Utilization, x	0.34	0.47	0.12	0.57
Capacity (veh/h)	579	596	498	609
Control Delay (s)	11.5	13.5	9.9	15.6
Approach Delay (s)	11.5	13.5	9.9	15.6
Approach LOS	B	B	A	C

Intersection Summary			
Delay	13.6		
HCM Level of Service	B		
Intersection Capacity Utilization	52.1%	ICU Level of Service	A
Analysis Period (min)	15		

Lane Group	EBL	EBR	NBL	NBT	NBR	SBT	NET
Lane Group Flow (vph)	14	100	5	32	517	263	4566
v/c Ratio	0.22	0.99	0.15	0.12	0.33	1.07	1.09
Control Delay	111.2	186.0	106.2	96.7	0.6	167.9	66.7
Queue Delay	0.0	0.0	0.0	0.0	0.0	0.0	15.3
Total Delay	111.2	186.0	106.2	96.7	0.6	167.9	82.0
Queue Length 50th (ft)	20	84	7	23	0	~222	~2719
Queue Length 95th (ft)	48	#152	24	43	0	#299	#2154
Internal Link Dist (ft)	257			1041		665	1300
Turn Bay Length (ft)					200		
Base Capacity (vph)	64	101	34	257	1583	245	4184
Starvation Cap Reductn	0	0	0	0	0	0	129
Spillback Cap Reductn	0	0	0	0	0	0	0
Storage Cap Reductn	0	0	0	0	0	0	0
Reduced v/c Ratio	0.22	0.99	0.15	0.12	0.33	1.07	1.13

Intersection Summary

~ Volume exceeds capacity, queue is theoretically infinite.
Queue shown is maximum after two cycles.

95th percentile volume exceeds capacity, queue may be longer.
Queue shown is maximum after two cycles.

Movement	EBL	EBR	NBL	NBT	NBR	SBL	SBT	NEL2	NEL	NET	NER
Lane Configurations											
Volume (vph)	12	84	4	27	434	4	217	1	2	3826	7
Ideal Flow (vphpl)	1900	1900	1900	1900	1900	1900	1900	1900	1900	1900	1900
Total Lost time (s)	5.0	5.0	5.0	5.0	4.0		5.0			5.0	
Lane Util. Factor	1.00	0.88	1.00	0.95	1.00		0.95			0.91	
Frt	1.00	0.85	1.00	1.00	0.85		1.00			1.00	
Flt Protected	0.95	1.00	0.95	1.00	1.00		1.00			1.00	
Satd. Flow (prot)	1770	2787	1770	3539	1583		3536			5084	
Flt Permitted	0.95	1.00	0.25	1.00	1.00		0.95			1.00	
Satd. Flow (perm)	1770	2787	466	3539	1583		3363			5084	
Peak-hour factor, PHF	0.84	0.84	0.84	0.84	0.84	0.84	0.84	0.84	0.84	0.84	0.84
Adj. Flow (vph)	14	100	5	32	517	5	258	1	2	4555	8
RTOR Reduction (vph)	0	0	0	0	0	0	0	0	0	0	0
Lane Group Flow (vph)	14	100	5	32	517	0	263	0	0	4566	0
Turn Type	NA	Perm	Perm	NA	Free	Perm	NA	Perm	Perm	NA	
Protected Phases	3			4			8			6	
Permitted Phases		3	4		Free	8		6	6		
Actuated Green, G (s)	8.0	8.0	16.0	16.0	220.0		16.0			181.0	
Effective Green, g (s)	8.0	8.0	16.0	16.0	220.0		16.0			181.0	
Actuated g/C Ratio	0.04	0.04	0.07	0.07	1.00		0.07			0.82	
Clearance Time (s)	5.0	5.0	5.0	5.0			5.0			5.0	
Vehicle Extension (s)	3.0	3.0	3.0	3.0			3.0			3.0	
Lane Grp Cap (vph)	64	101	34	257	1583		245			4183	
v/s Ratio Prot	0.01			0.01							
v/s Ratio Perm		c0.04	0.01		0.33		c0.08			0.90	
v/c Ratio	0.22	0.99	0.15	0.12	0.33		1.07			1.09	
Uniform Delay, d1	103.0	106.0	95.6	95.4	0.0		102.0			19.5	
Progression Factor	1.00	1.00	1.00	1.00	1.00		1.00			1.00	
Incremental Delay, d2	1.7	86.2	8.9	1.0	0.6		78.4			45.8	
Delay (s)	104.7	192.2	104.5	96.4	0.6		180.4			65.3	
Level of Service	F	F	F	F	A		F			E	
Approach Delay (s)	181.4			7.0			180.4			65.3	
Approach LOS	F			A			F			E	

Intersection Summary			
HCM Average Control Delay	67.4	HCM Level of Service	E
HCM Volume to Capacity ratio	1.09		
Actuated Cycle Length (s)	220.0	Sum of lost time (s)	15.0
Intersection Capacity Utilization	101.3%	ICU Level of Service	G
Analysis Period (min)	15		
c Critical Lane Group			

Movement	EBL	EBR	NBL	NBT	SBT	SBR
Lane Configurations						
Volume (veh/h)	55	38	42	469	197	59
Sign Control	Stop			Free	Free	
Grade	0%			0%	0%	
Peak Hour Factor	0.90	0.90	0.90	0.90	0.90	0.90
Hourly flow rate (vph)	61	42	47	521	219	66
Pedestrians	236					
Lane Width (ft)	12.0					
Walking Speed (ft/s)	4.0					
Percent Blockage	20					
Right turn flare (veh)						
Median type				None	None	
Median storage veh)						
Upstream signal (ft)					1121	
pX, platoon unblocked	0.91	0.91	0.91			
vC, conflicting volume	1102	488	520			
vC1, stage 1 conf vol						
vC2, stage 2 conf vol						
vCu, unblocked vol	1064	390	426			
tC, single (s)	6.4	6.2	4.1			
tC, 2 stage (s)						
tF (s)	3.5	3.3	2.2			
p0 queue free %	64	91	94			
cM capacity (veh/h)	171	482	830			

Direction, Lane #	EB 1	NB 1	SB 1
Volume Total	103	568	284
Volume Left	61	47	0
Volume Right	42	0	66
cSH	232	830	1700
Volume to Capacity	0.45	0.06	0.17
Queue Length 95th (ft)	53	4	0
Control Delay (s)	32.4	1.5	0.0
Lane LOS	D	A	
Approach Delay (s)	32.4	1.5	0.0
Approach LOS	D		

Intersection Summary			
Average Delay	4.4		
Intersection Capacity Utilization	58.2%	ICU Level of Service	B
Analysis Period (min)	15		

Movement	WBL	WBR	NBT	NBR	SBL	SBT
Lane Configurations						
Volume (veh/h)	66	49	463	36	23	189
Sign Control	Stop		Free			Free
Grade	0%		0%			0%
Peak Hour Factor	0.89	0.89	0.89	0.89	0.89	0.89
Hourly flow rate (vph)	74	55	520	40	26	212
Pedestrians			85			
Lane Width (ft)			12.0			
Walking Speed (ft/s)			4.0			
Percent Blockage			7			
Right turn flare (veh)						
Median type			None			None
Median storage veh)						
Upstream signal (ft)						
pX, platoon unblocked						
vC, conflicting volume	889	540			561	
vC1, stage 1 conf vol						
vC2, stage 2 conf vol						
vCu, unblocked vol	889	540			561	
tC, single (s)	6.4	6.2			4.1	
tC, 2 stage (s)						
tF (s)	3.5	3.3			2.2	
p0 queue free %	74	90			97	
cM capacity (veh/h)	284	541			1010	

Direction, Lane #	WB 1	NB 1	SB 1
Volume Total	129	561	238
Volume Left	74	0	26
Volume Right	55	40	0
cSH	356	1700	1010
Volume to Capacity	0.36	0.33	0.03
Queue Length 95th (ft)	40	0	2
Control Delay (s)	20.8	0.0	1.2
Lane LOS	C		A
Approach Delay (s)	20.8	0.0	1.2
Approach LOS	C		

Intersection Summary			
Average Delay	3.2		
Intersection Capacity Utilization	42.5%	ICU Level of Service	A
Analysis Period (min)	15		

Movement	EBL	EBR	NBL	NBT	SBT	SBR
Lane Configurations						
Volume (veh/h)	36	28	23	488	213	41
Sign Control	Stop			Free	Free	
Grade	0%			0%	0%	
Peak Hour Factor	0.95	0.95	0.95	0.95	0.95	0.95
Hourly flow rate (vph)	38	29	24	514	224	43
Pedestrians						
Lane Width (ft)						
Walking Speed (ft/s)						
Percent Blockage						
Right turn flare (veh)						
Median type				None	None	
Median storage veh)						
Upstream signal (ft)				1230		
pX, platoon unblocked	0.90					
vC, conflicting volume	808	246	267			
vC1, stage 1 conf vol						
vC2, stage 2 conf vol						
vCu, unblocked vol	727	246	267			
tC, single (s)	6.4	6.2	4.1			
tC, 2 stage (s)						
tF (s)	3.5	3.3	2.2			
p0 queue free %	89	96	98			
cM capacity (veh/h)	344	793	1296			

Direction, Lane #	EB 1	NB 1	SB 1
Volume Total	67	538	267
Volume Left	38	24	0
Volume Right	29	0	43
cSH	457	1296	1700
Volume to Capacity	0.15	0.02	0.16
Queue Length 95th (ft)	13	1	0
Control Delay (s)	14.2	0.6	0.0
Lane LOS	B	A	
Approach Delay (s)	14.2	0.6	0.0
Approach LOS	B		

Intersection Summary			
Average Delay	1.4		
Intersection Capacity Utilization	54.4%	ICU Level of Service	A
Analysis Period (min)	15		

Movement	EBL	EBT	EBR	WBL	WBT	WBR	NBL	NBT	NBR	SBL	SBT	SBR
Lane Configurations												
Volume (veh/h)	76	12	15	42	22	17	17	421	12	4	200	33
Sign Control		Stop			Stop			Free			Free	
Grade		0%			0%			0%			0%	
Peak Hour Factor	0.93	0.93	0.93	0.93	0.93	0.93	0.93	0.93	0.93	0.93	0.93	0.93
Hourly flow rate (vph)	82	13	16	45	24	18	18	453	13	4	215	35
Pedestrians												
Lane Width (ft)												
Walking Speed (ft/s)												
Percent Blockage												
Right turn flare (veh)												
Median type								None			None	
Median storage veh)												
Upstream signal (ft)								904				
pX, platoon unblocked	0.84	0.84		0.84	0.84	0.84				0.84		
vC, conflicting volume	767	744	233	760	755	459	251			466		
vC1, stage 1 conf vol												
vC2, stage 2 conf vol												
vCu, unblocked vol	629	601	233	620	614	263	251			270		
tC, single (s)	7.1	6.5	6.2	7.1	6.5	6.2	4.1			4.1		
tC, 2 stage (s)												
tF (s)	3.5	4.0	3.3	3.5	4.0	3.3	2.2			2.2		
p0 queue free %	73	96	98	86	93	97	99			100		
cM capacity (veh/h)	301	342	806	316	336	653	1315			1088		

Direction, Lane #	EB 1	WB 1	NB 1	SB 1
Volume Total	111	87	484	255
Volume Left	82	45	18	4
Volume Right	16	18	13	35
cSH	337	361	1315	1088
Volume to Capacity	0.33	0.24	0.01	0.00
Queue Length 95th (ft)	35	23	1	0
Control Delay (s)	20.8	18.1	0.4	0.2
Lane LOS	C	C	A	A
Approach Delay (s)	20.8	18.1	0.4	0.2
Approach LOS	C	C		

Intersection Summary			
Average Delay	4.4		
Intersection Capacity Utilization	47.2%	ICU Level of Service	A
Analysis Period (min)	15		

Movement	EBL	EBT	EBR	WBL	WBT	WBR	NBL	NBT	NBR	SBL	SBT	SBR
Lane Configurations												
Volume (veh/h)	16	12	4	15	5	2	4	433	14	0	243	10
Sign Control		Stop			Stop			Free			Free	
Grade		0%			0%			0%			0%	
Peak Hour Factor	0.91	0.91	0.91	0.91	0.91	0.91	0.91	0.91	0.91	0.91	0.91	0.91
Hourly flow rate (vph)	18	13	4	16	5	2	4	476	15	0	267	11
Pedestrians												
Lane Width (ft)												
Walking Speed (ft/s)												
Percent Blockage												
Right turn flare (veh)												
Median type								None			None	
Median storage veh)												
Upstream signal (ft)								601				
pX, platoon unblocked	0.80	0.80		0.80	0.80	0.80				0.80		
vC, conflicting volume	770	773	273	776	770	484	278			491		
vC1, stage 1 conf vol												
vC2, stage 2 conf vol												
vCu, unblocked vol	587	590	273	594	587	229	278			238		
tC, single (s)	7.1	6.5	6.2	7.1	6.5	6.2	4.1			4.1		
tC, 2 stage (s)												
tF (s)	3.5	4.0	3.3	3.5	4.0	3.3	2.2			2.2		
p0 queue free %	95	96	99	95	98	100	100			100		
cM capacity (veh/h)	331	335	766	320	336	648	1285			1062		

Direction, Lane #	EB 1	WB 1	NB 1	SB 1
Volume Total	35	24	496	278
Volume Left	18	16	4	0
Volume Right	4	2	15	11
cSH	358	339	1285	1062
Volume to Capacity	0.10	0.07	0.00	0.00
Queue Length 95th (ft)	8	6	0	0
Control Delay (s)	16.2	16.4	0.1	0.0
Lane LOS	C	C	A	
Approach Delay (s)	16.2	16.4	0.1	0.0
Approach LOS	C	C		

Intersection Summary			
Average Delay	1.2		
Intersection Capacity Utilization	36.8%	ICU Level of Service	A
Analysis Period (min)	15		

Movement	EBL	EBT	EBR	WBL	WBT	WBR	NBL	NBT	NBR	SBL	SBT	SBR
Lane Configurations												
Volume (veh/h)	17	36	52	9	38	2	27	423	19	15	180	73
Sign Control		Stop			Stop			Free			Free	
Grade		0%			0%			0%			0%	
Peak Hour Factor	0.94	0.94	0.94	0.94	0.94	0.94	0.94	0.94	0.94	0.94	0.94	0.94
Hourly flow rate (vph)	18	38	55	10	40	2	29	450	20	16	191	78
Pedestrians												
Lane Width (ft)												
Walking Speed (ft/s)												
Percent Blockage												
Right turn flare (veh)												
Median type								None			None	
Median storage veh)												
Upstream signal (ft)								300				
pX, platoon unblocked	0.75	0.75		0.75	0.75	0.75				0.75		
vC, conflicting volume	802	790	230	854	819	460	269			470		
vC1, stage 1 conf vol												
vC2, stage 2 conf vol												
vCu, unblocked vol	571	555	230	640	593	116	269			129		
tC, single (s)	7.1	6.5	6.2	7.1	6.5	6.2	4.1			4.1		
tC, 2 stage (s)												
tF (s)	3.5	4.0	3.3	3.5	4.0	3.3	2.2			2.2		
p0 queue free %	94	88	93	96	87	100	98			99		
cM capacity (veh/h)	282	319	809	240	303	704	1294			1094		

Direction, Lane #	EB 1	WB 1	NB 1	SB 1
Volume Total	112	52	499	285
Volume Left	18	10	29	16
Volume Right	55	2	20	78
cSH	442	295	1294	1094
Volume to Capacity	0.25	0.18	0.02	0.01
Queue Length 95th (ft)	25	16	2	1
Control Delay (s)	15.9	19.8	0.7	0.6
Lane LOS	C	C	A	A
Approach Delay (s)	15.9	19.8	0.7	0.6
Approach LOS	C	C		

Intersection Summary			
Average Delay	3.5		
Intersection Capacity Utilization	46.5%	ICU Level of Service	A
Analysis Period (min)	15		

Lane Group	EBL	EBT	EBR	WBL	WBT	NBL	NBT	SBL	SBT
Lane Group Flow (vph)	123	520	137	166	697	365	740	23	207
v/c Ratio	0.32	0.50	0.30	0.35	0.67	0.59	0.76	0.05	0.22
Control Delay	30.5	42.2	14.7	37.1	56.4	32.6	50.5	27.9	46.8
Queue Delay	0.0	0.0	0.0	0.0	0.1	0.0	0.0	0.0	0.0
Total Delay	30.5	42.2	14.7	37.1	56.5	32.6	50.5	27.9	46.8
Queue Length 50th (ft)	76	185	16	120	361	257	296	14	88
Queue Length 95th (ft)	155	302	86	225	535	392	465	37	150
Internal Link Dist (ft)		1441			531		229		156
Turn Bay Length (ft)	130			95		155		130	
Base Capacity (vph)	419	1437	619	465	1419	738	1438	578	1433
Starvation Cap Reductn	0	0	0	0	147	0	0	0	0
Spillback Cap Reductn	0	0	0	0	0	0	0	0	0
Storage Cap Reductn	0	0	0	0	0	0	0	0	0
Reduced v/c Ratio	0.29	0.36	0.22	0.36	0.55	0.49	0.51	0.04	0.14

Intersection Summary

Movement	EBL	EBT	EBR	WBL	WBT	WBR	NBL	NBT	NBR	SBL	SBT	SBR
Lane Configurations												
Volume (vph)	117	494	130	158	600	62	347	392	311	22	169	28
Ideal Flow (vphpl)	1900	1900	1900	1900	1900	1900	1900	1900	1900	1900	1900	1900
Total Lost time (s)	3.0	3.0	5.0	3.0	3.0		3.0	3.0		3.0	3.0	
Lane Util. Factor	1.00	0.95	1.00	1.00	0.95		1.00	0.95		1.00	0.95	
Frt	1.00	1.00	0.85	1.00	0.99		1.00	0.93		1.00	0.98	
Flt Protected	0.95	1.00	1.00	0.95	1.00		0.95	1.00		0.95	1.00	
Satd. Flow (prot)	1770	3539	1583	1770	3490		1770	3305		1770	3465	
Flt Permitted	0.19	1.00	1.00	0.46	1.00		0.62	1.00		0.37	1.00	
Satd. Flow (perm)	363	3539	1583	856	3490		1159	3305		690	3465	
Peak-hour factor, PHF	0.95	0.95	0.95	0.95	0.95	0.95	0.95	0.95	0.95	0.95	0.95	0.95
Adj. Flow (vph)	123	520	137	166	632	65	365	413	327	23	178	29
RTOR Reduction (vph)	0	0	91	0	4	0	0	69	0	0	7	0
Lane Group Flow (vph)	123	520	46	166	693	0	365	671	0	23	200	0
Turn Type	custom	NA	custom	custom	NA		custom	NA		custom	NA	
Protected Phases	1 2	2 4		1 3	3 4		5 6	6 8		5 7	7 8	
Permitted Phases	4		4	4			8			8		
Actuated Green, G (s)	64.9	46.3	37.9	61.8	46.2		69.0	42.7		66.3	43.0	
Effective Green, g (s)	64.9	46.3	37.9	61.8	46.2		69.0	42.7		66.3	43.0	
Actuated g/C Ratio	0.40	0.28	0.23	0.38	0.28		0.42	0.26		0.40	0.26	
Clearance Time (s)			5.0									
Vehicle Extension (s)			3.0									
Lane Grp Cap (vph)	376	1000	366	456	984		606	862		470	910	
v/s Ratio Prot	c0.05	c0.15		0.05	c0.20		c0.12	c0.20		0.01	c0.06	
v/s Ratio Perm	0.08		0.03	0.08			0.14			0.01		
v/c Ratio	0.33	0.52	0.12	0.36	0.70		0.60	0.78		0.05	0.22	
Uniform Delay, d1	33.4	49.4	49.8	35.0	52.7		34.6	56.2		29.4	47.3	
Progression Factor	1.00	1.00	1.00	1.00	1.00		1.00	1.00		1.00	1.00	
Incremental Delay, d2	0.5	0.5	0.2	0.5	2.3		1.7	4.5		0.0	0.1	
Delay (s)	33.9	49.9	50.0	35.5	55.0		36.3	60.7		29.4	47.4	
Level of Service	C	D	D	D	E		D	E		C	D	
Approach Delay (s)		47.4			51.3			52.6			45.6	
Approach LOS		D			D			D			D	

Intersection Summary			
HCM Average Control Delay	50.3	HCM Level of Service	D
HCM Volume to Capacity ratio	0.62		
Actuated Cycle Length (s)	163.8	Sum of lost time (s)	15.0
Intersection Capacity Utilization	63.4%	ICU Level of Service	B
Analysis Period (min)	15		
c Critical Lane Group			

Lane Group	EBL	EBT	WBT	SBL
Lane Group Flow (vph)	405	675	958	158
v/c Ratio	1.06	0.22	0.31	1.05
Control Delay	77.2	2.1	2.3	160.5
Queue Delay	1.9	0.6	0.0	0.0
Total Delay	79.1	2.6	2.3	160.5
Queue Length 50th (ft)	~641	61	93	~207
Queue Length 95th (ft)	#278	68	103	#374
Internal Link Dist (ft)		531	201	216
Turn Bay Length (ft)	75			
Base Capacity (vph)	383	3121	3089	150
Starvation Cap Reductn	2	1939	0	0
Spillback Cap Reductn	0	0	0	0
Storage Cap Reductn	0	0	0	0
Reduced v/c Ratio	1.06	0.57	0.31	1.05

Intersection Summary

~ Volume exceeds capacity, queue is theoretically infinite.
Queue shown is maximum after two cycles.

95th percentile volume exceeds capacity, queue may be longer.
Queue shown is maximum after two cycles.

Movement	EBL	EBT	WBT	WBR	SBL	SBR
Lane Configurations						
Volume (vph)	356	594	781	62	52	87
Ideal Flow (vphpl)	1900	1900	1900	1900	1900	1900
Total Lost time (s)	5.0	5.0	5.0		5.0	
Lane Util. Factor	1.00	0.95	0.95		1.00	
Frpb, ped/bikes	1.00	1.00	1.00		1.00	
Flpb, ped/bikes	0.80	1.00	1.00		1.00	
Frt	1.00	1.00	0.99		0.92	
Flt Protected	0.95	1.00	1.00		0.98	
Satd. Flow (prot)	1416	3539	3500		1674	
Flt Permitted	0.29	1.00	1.00		0.98	
Satd. Flow (perm)	434	3539	3500		1674	
Peak-hour factor, PHF	0.88	0.88	0.88	0.88	0.88	0.88
Adj. Flow (vph)	405	675	888	70	59	99
RTOR Reduction (vph)	0	0	3	0	28	0
Lane Group Flow (vph)	405	675	955	0	130	0
Confl. Peds. (#/hr)	376					
Turn Type	Perm	NA	NA		NA	
Protected Phases		4	8		6	
Permitted Phases	4					
Actuated Green, G (s)	194.0	194.0	194.0		16.0	
Effective Green, g (s)	194.0	194.0	194.0		16.0	
Actuated g/C Ratio	0.88	0.88	0.88		0.07	
Clearance Time (s)	5.0	5.0	5.0		5.0	
Vehicle Extension (s)	3.0	3.0	3.0		3.0	
Lane Grp Cap (vph)	383	3121	3086		122	
v/s Ratio Prot		0.19	0.27		c0.08	
v/s Ratio Perm	c0.93					
v/c Ratio	1.06	0.22	0.31		1.07	
Uniform Delay, d1	13.0	1.9	2.1		102.0	
Progression Factor	1.00	1.00	1.00		1.00	
Incremental Delay, d2	61.9	0.0	0.1		100.6	
Delay (s)	74.9	1.9	2.2		202.6	
Level of Service	E	A	A		F	
Approach Delay (s)		29.3	2.2		202.6	
Approach LOS		C	A		F	

Intersection Summary			
HCM Average Control Delay	29.9	HCM Level of Service	C
HCM Volume to Capacity ratio	1.06		
Actuated Cycle Length (s)	220.0	Sum of lost time (s)	10.0
Intersection Capacity Utilization	64.0%	ICU Level of Service	C
Analysis Period (min)	15		

c Critical Lane Group

Lane Group	EBL	EBT	EBR	WBL	WBT	WBR	NBL	NBT	NBR	SBL	SBT	SBR
Lane Group Flow (vph)	771	923	6	231	698	140	71	3119	69	168	2024	410
v/c Ratio	1.16	0.91	0.01	0.97	1.21	0.47	0.51	1.15	0.06	1.38	0.76	0.19
Control Delay	140.4	71.8	23.6	94.3	164.5	60.1	30.8	105.6	7.4	240.7	30.7	3.4
Queue Delay	0.0	0.0	0.0	0.0	0.0	0.0	0.0	0.0	0.0	0.0	0.0	0.0
Total Delay	140.4	71.8	23.6	94.3	164.5	60.1	30.8	105.6	7.4	240.7	30.7	3.4
Queue Length 50th (ft)	~459	327	1	176	~304	123	27	~1309	19	~166	564	34
Queue Length 95th (ft)	#527	352	12	#308	#354	180	62	#1220	34	#289	555	45
Internal Link Dist (ft)		484			394			469			768	
Turn Bay Length (ft)	200		200	286		200	160		200	130		200
Base Capacity (vph)	664	1017	457	238	576	296	145	2712	1069	122	2664	2132
Starvation Cap Reductn	0	0	0	0	0	0	0	0	0	0	0	0
Spillback Cap Reductn	0	0	0	0	0	0	0	0	0	0	0	0
Storage Cap Reductn	0	0	0	0	0	0	0	0	0	0	0	0
Reduced v/c Ratio	1.16	0.91	0.01	0.97	1.21	0.47	0.49	1.15	0.06	1.38	0.76	0.19

Intersection Summary

~ Volume exceeds capacity, queue is theoretically infinite.
Queue shown is maximum after two cycles.

95th percentile volume exceeds capacity, queue may be longer.
Queue shown is maximum after two cycles.

Movement	EBL	EBT	EBR	WBL	WBT	WBR	NBL	NBT	NBR	SBL	SBT	SBR
Lane Configurations												
Volume (vph)	648	775	5	194	586	118	60	2620	58	141	1700	344
Ideal Flow (vphpl)	1900	1900	1900	1900	1900	1900	1900	1900	1900	1900	1900	1900
Total Lost time (s)	5.0	5.0	3.0	5.0	5.0	3.0	3.0	5.0	5.0	3.0	5.0	5.0
Lane Util. Factor	0.97	0.91	1.00	1.00	0.91	1.00	1.00	0.91	1.00	1.00	0.91	0.88
Frt	1.00	1.00	0.85	1.00	1.00	0.85	1.00	1.00	0.85	1.00	1.00	0.85
Flt Protected	0.95	1.00	1.00	0.95	1.00	1.00	0.95	1.00	1.00	0.95	1.00	1.00
Satd. Flow (prot)	3433	5085	1583	1770	5085	1583	1770	5085	1583	1770	5085	2787
Flt Permitted	0.95	1.00	1.00	0.24	1.00	1.00	0.05	1.00	1.00	0.05	1.00	1.00
Satd. Flow (perm)	3433	5085	1583	438	5085	1583	93	5085	1583	95	5085	2787
Peak-hour factor, PHF	0.84	0.84	0.84	0.84	0.84	0.84	0.84	0.84	0.84	0.84	0.84	0.84
Adj. Flow (vph)	771	923	6	231	698	140	71	3119	69	168	2024	410
RTOR Reduction (vph)	0	0	4	0	0	1	0	0	3	0	0	46
Lane Group Flow (vph)	771	923	2	231	698	139	71	3119	66	168	2024	364
Turn Type	Prot	NA	pm+ov	pm+pt	NA	pm+ov	pm+pt	NA	pm+ov	pm+pt	NA	pm+ov
Protected Phases	7	4	5	3	8	1	5	2	3	1	6	7
Permitted Phases			4	8		8	2		2	6		6
Actuated Green, G (s)	29.0	30.0	37.4	33.0	17.0	23.0	87.4	80.0	96.0	84.6	78.6	107.6
Effective Green, g (s)	29.0	30.0	37.4	33.0	17.0	23.0	87.4	80.0	96.0	84.6	78.6	107.6
Actuated g/C Ratio	0.19	0.20	0.25	0.22	0.11	0.15	0.58	0.53	0.64	0.56	0.52	0.72
Clearance Time (s)	5.0	5.0	3.0	5.0	5.0	3.0	3.0	5.0	5.0	3.0	5.0	5.0
Vehicle Extension (s)	3.0	3.0	3.0	3.0	3.0	3.0	3.0	3.0	3.0	3.0	3.0	3.0
Lane Grp Cap (vph)	664	1017	395	238	576	243	137	2712	1066	121	2665	2092
v/s Ratio Prot	c0.22	0.18	0.00	0.10	c0.14	0.02	c0.03	0.61	0.01	c0.06	0.40	0.03
v/s Ratio Perm			0.00	0.11		0.06	0.28		0.03	c0.73		0.10
v/c Ratio	1.16	0.91	0.01	0.97	1.21	0.57	0.52	1.15	0.06	1.39	0.76	0.17
Uniform Delay, d1	60.5	58.6	42.3	53.8	66.5	58.9	24.2	35.0	10.1	43.1	28.2	6.8
Progression Factor	1.00	1.00	1.00	1.00	1.00	1.00	1.00	1.00	1.00	1.00	1.00	1.00
Incremental Delay, d2	88.5	11.4	0.0	49.8	110.7	3.2	3.3	72.3	0.0	217.5	1.3	0.0
Delay (s)	149.0	70.1	42.3	103.7	177.2	62.2	27.5	107.3	10.1	260.6	29.5	6.9
Level of Service	F	E	D	F	F	E	C	F	B	F	C	A
Approach Delay (s)		105.8			146.2			103.5			40.9	
Approach LOS		F			F			F			D	

Intersection Summary			
HCM Average Control Delay	90.4	HCM Level of Service	F
HCM Volume to Capacity ratio	1.32		
Actuated Cycle Length (s)	150.0	Sum of lost time (s)	19.0
Intersection Capacity Utilization	104.1%	ICU Level of Service	G
Analysis Period (min)	15		
c Critical Lane Group			

Movement	EBL	EBT	EBR	WBL	WBT	WBR	NBL	NBT	NBR	SBL	SBT	SBR
Lane Configurations												
Volume (vph)	648	775	5	194	586	118	60	2620	58	141	1700	344
Movement Number	7	4	14	3	8	18	5	2	12	1	6	16
Initial Queue, veh	0	0	0	0	0	0	0	0	0	0	0	0
Ped-Bike Adj. Factor (A_pbT)	1.00		1.00	1.00		1.00	1.00		1.00	1.00		1.00
Parking, Bus Adj. Factors	1.00	1.00	1.00	1.00	1.00	1.00	1.00	1.00	1.00	1.00	1.00	1.00
Adj. Sat. Flow Rate, veh/h/ln	1863	1863	1863	1863	1863	1863	1863	1863	1863	1863	1863	1863
Lanes	2	3	1	1	3	1	1	3	1	1	3	2
Lane Assignment												
Capacity, veh/h	665	1017	367	251	576	243	154	2712	1013	119	2755	2048
Proportion Arriving On Green	0.19	0.20	0.20	0.11	0.11	0.11	0.03	0.53	0.53	0.04	0.54	0.54
Movement Delay, s/veh	148.3	70.2	44.5	90.6	176.6	62.4	26.8	107.3	10.3	272.8	27.2	6.2
Movement LOS	F	E	D	F	F	E	C	F	B	F	C	A
Approach Volume, veh/h		1700			1069			3260			2601	
Approach Delay, s/veh		105.6			143.0			103.4			39.8	
Approach LOS		F			F			F			D	

Timer:	1	2	3	4	5	6	7	8
Assigned Phase	1	2	3	4	5	6	7	8
Case No	1.1	3.0	1.1	3.0	1.1	3.0	2.0	3.0
Phase Duration (G+Y+Rc), s	9.00	85.00	21.00	35.00	7.75	86.25	34.00	22.00
Change Period (Y+Rc), s	3.00	5.00	5.00	5.00	3.00	5.00	5.00	5.00
Max. Allowable Headway (MAH), s	4.00	3.92	4.00	3.92	4.00	3.92	4.00	3.92
Maximum Green Setting (Gmax), s	6.00	80.00	16.00	30.00	8.00	78.00	29.00	17.00
Max. Queue Clearance Time (g_c+I1), s	8.00	82.00	18.00	28.60	4.74	47.44	31.00	19.00
Green Extension Time (g_e), s	0.00	0.00	0.00	1.04	0.04	29.78	0.00	0.00
Probability of Phase Call (p_c)	0.999	1.000	1.000	1.000	0.949	1.000	1.000	1.000
Probability of Max Out (p_x)	1.000	1.000	1.000	1.000	1.000	0.967	1.000	1.000

Left-Turn Movement Data				
Assigned Movement	1	3	5	7
Mvmt. Sat Flow, veh/h	1774.04	1774.04	1774.04	3441.64

Through Movement Data				
Assigned Movement	2	4	6	8
Mvmt. Sat Flow, veh/h	5085.29	5085.29	5085.29	5085.29

Right-Turn Movement Data				
Assigned Movement	12	14	16	18
Mvmt. Sat Flow, veh/h	1583.33	1583.33	2786.67	1583.33

Left Lane Group Data								
Assigned Movement	1	0	3	0	5	0	7	0
Lane Assignment	L (Pr/Pm)		L (Pr/Pm)		L (Pr/Pm)		L (Prot)	
Lanes in Group	1	0	1	0	1	0	2	0
Group Volume (v), veh/h	167.9	0.0	231.0	0.0	71.4	0.0	771.4	0.0
Group Sat. Flow (s), veh/h/ln	1774.0	0.0	1774.0	0.0	1774.0	0.0	1720.8	0.0
Queue Serve Time (g_s), s	6.0	0.0	16.0	0.0	2.7	0.0	29.0	0.0
Cycle Queue Clear Time (g_c), s	6.0	0.0	16.0	0.0	2.7	0.0	29.0	0.0

Perm LT Sat Flow Rate (s_l), veh/h/ln	70.0	0.0	603.4	0.0	209.5	0.0	0.0	0.0
Shared LT Sat Flow (s_sh), veh/h/ln	0.0	0.0	0.0	0.0	0.0	0.0	0.0	0.0
Perm LT Eff. Green (g_p), s	81.5	0.0	17.0	0.0	80.0	0.0	0.0	0.0
Perm LT Serve Time (g_u), s	0.0	0.0	3.4	0.0	35.8	0.0	0.0	0.0
Perm LT Que Serve Time (g_ps), s	0.0	0.0	3.4	0.0	22.9	0.0	0.0	0.0
Time to First Blk (g_f), s	0.0	0.0	0.0	0.0	0.0	0.0	0.0	0.0
Serve Time pre Blk (g_fs), s	0.0	0.0	0.0	0.0	0.0	0.0	0.0	0.0
Proportion LT Inside Lane (P_L)	1.000	0.000	1.000	0.000	1.000	0.000	1.000	0.000
Lane Group Capacity (c), veh/h	119.0	0.0	250.9	0.0	154.1	0.0	665.4	0.0
Volume-to-Capacity Ratio (X)	1.411	0.000	0.920	0.000	0.463	0.000	1.159	0.000
Available Capacity (c_a), veh/h	119.0	0.0	250.9	0.0	192.6	0.0	665.4	0.0
Upstream Filter Factor (I)	1.000	0.000	1.000	0.000	1.000	0.000	1.000	0.000
Uniform Delay (d1), s/veh	45.6	0.0	54.4	0.0	24.7	0.0	60.5	0.0
Incremental Delay (d2), s/veh	227.2	0.0	36.1	0.0	2.2	0.0	87.8	0.0
Initial Queue Delay (d3), s/veh	0.0	0.0	0.0	0.0	0.0	0.0	0.0	0.0
Control Delay (d), s/veh	272.8	0.0	90.6	0.0	26.8	0.0	148.3	0.0
First-Term Queue (Q1), veh/ln	2.7	0.0	7.9	0.0	1.2	0.0	12.7	0.0
Second-Term Queue (Q2), veh/ln	7.5	0.0	2.5	0.0	0.1	0.0	8.1	0.0
Third-Term Queue (Q3), veh/ln	0.0	0.0	0.0	0.0	0.0	0.0	0.0	0.0
Percentile bk-of-que factor (f_B%)	1.000	0.000	1.000	0.000	1.000	0.000	1.000	0.000
Percentile Back of Queue (Q%), veh/ln	10.2	0.0	10.4	0.0	1.3	0.0	20.8	0.0
Percentile Storage Ratio (RQ%)	1.99	0.00	0.92	0.00	0.21	0.00	2.64	0.00
Initial Queue (Qb), veh	0.0	0.0	0.0	0.0	0.0	0.0	0.0	0.0
Final (Residual) Queue (Qe), veh	12.2	0.0	0.0	0.0	0.0	0.0	26.5	0.0
Saturated Delay (ds), s/veh	0.0	0.0	0.0	0.0	0.0	0.0	0.0	0.0
Saturated Queue (Qs), veh	0.0	0.0	0.0	0.0	0.0	0.0	0.0	0.0
Saturated Capacity (cs), veh/h	0.0	0.0	0.0	0.0	0.0	0.0	0.0	0.0
Initial Queue Clear Time (tc), h	0.4	0.0	0.0	0.0	0.0	0.0	0.3	0.0

Middle Lane Group Data								
Assigned Movement	0	2	0	4	0	6	0	8
Lane Assignment		T		T		T		T
Lanes in Group	0	3	0	3	0	3	0	3
Group Volume (v), veh/h	0.0	3119.0	0.0	922.6	0.0	2023.8	0.0	697.6
Group Sat. Flow (s), veh/h/ln	0.0	1695.1	0.0	1695.1	0.0	1695.1	0.0	1695.1
Queue Serve Time (g_s), s	0.0	80.0	0.0	26.6	0.0	45.4	0.0	17.0
Cycle Queue Clear Time (g_c), s	0.0	80.0	0.0	26.6	0.0	45.4	0.0	17.0
Lane Group Capacity (c), veh/h	0.0	2712.2	0.0	1017.1	0.0	2754.7	0.0	576.3
Volume-to-Capacity Ratio (X)	0.000	1.150	0.000	0.907	0.000	0.735	0.000	1.210
Available Capacity (c_a), veh/h	0.0	2712.2	0.0	1017.1	0.0	2754.7	0.0	576.3
Upstream Filter Factor (I)	0.000	1.000	0.000	1.000	0.000	1.000	0.000	1.000
Uniform Delay (d1), s/veh	0.0	35.0	0.0	58.6	0.0	26.2	0.0	66.5
Incremental Delay (d2), s/veh	0.0	72.3	0.0	11.6	0.0	1.0	0.0	110.1
Initial Queue Delay (d3), s/veh	0.0	0.0	0.0	0.0	0.0	0.0	0.0	0.0
Control Delay (d), s/veh	0.0	107.3	0.0	70.2	0.0	27.2	0.0	176.6
First-Term Queue (Q1), veh/ln	0.0	32.1	0.0	11.4	0.0	18.2	0.0	7.4
Second-Term Queue (Q2), veh/ln	0.0	18.1	0.0	1.1	0.0	0.3	0.0	5.9
Third-Term Queue (Q3), veh/ln	0.0	0.0	0.0	0.0	0.0	0.0	0.0	0.0
Percentile bk-of-que factor (f_B%)	0.000	1.000	0.000	1.000	0.000	1.000	0.000	1.000
Percentile Back of Queue (Q%), veh/ln	0.0	50.2	0.0	12.5	0.0	18.4	0.0	13.3
Percentile Storage Ratio (RQ%)	0.00	2.95	0.00	0.70	0.00	0.67	0.00	0.97

Initial Queue (Qb), veh	0.0	0.0	0.0	0.0	0.0	0.0	0.0	0.0
Final (Residual) Queue (Qe), veh	0.0	101.7	0.0	0.0	0.0	0.0	0.0	30.3
Saturated Delay (ds), s/veh	0.0	0.0	0.0	0.0	0.0	0.0	0.0	0.0
Saturated Queue (Qs), veh	0.0	0.0	0.0	0.0	0.0	0.0	0.0	0.0
Saturated Capacity (cs), veh/h	0.0	0.0	0.0	0.0	0.0	0.0	0.0	0.0
Initial Queue Clear Time (tc), h	0.0	0.3	0.0	0.0	0.0	0.0	0.0	0.3

Right Lane Group Data								
Assigned Movement	0	12	0	14	0	16	0	18
Lane Assignment		R		R		R		R
Lanes in Group	0	1	0	1	0	2	0	1
Group Volume (v), veh/h	0.0	69.0	0.0	6.0	0.0	409.5	0.0	140.5
Group Sat. Flow (s), veh/h/ln	0.0	1583.3	0.0	1583.3	0.0	1393.3	0.0	1583.3
Queue Serve Time (g_s), s	0.0	2.5	0.0	0.4	0.0	6.8	0.0	12.4
Cycle Queue Clear Time (g_c), s	0.0	2.5	0.0	0.4	0.0	6.8	0.0	12.4
Prot RT Sat Flow Rate (s_R), veh/h/ln	0.0	1583.3	0.0	1583.3	0.0	1393.3	0.0	1583.3
Prot RT Eff. Green (g_R), s	0.0	16.0	0.0	4.7	0.0	29.0	0.0	6.0
Proportion RT Outside Lane (P_R)	0.000	1.000	0.000	1.000	0.000	1.000	0.000	1.000
Lane Group Capacity (c), veh/h	0.0	1013.3	0.0	366.8	0.0	2048.3	0.0	242.8
Volume-to-Capacity Ratio (X)	0.000	0.068	0.000	0.016	0.000	0.200	0.000	0.579
Available Capacity (c_a), veh/h	0.0	1013.3	0.0	366.8	0.0	2048.3	0.0	242.8
Upstream Filter Factor (I)	0.000	1.000	0.000	1.000	0.000	1.000	0.000	1.000
Uniform Delay (d1), s/veh	0.0	10.2	0.0	44.4	0.0	6.2	0.0	59.0
Incremental Delay (d2), s/veh	0.0	0.1	0.0	0.0	0.0	0.0	0.0	3.4
Initial Queue Delay (d3), s/veh	0.0	0.0	0.0	0.0	0.0	0.0	0.0	0.0
Control Delay (d), s/veh	0.0	10.3	0.0	44.5	0.0	6.2	0.0	62.4
First-Term Queue (Q1), veh/ln	0.0	0.9	0.0	0.2	0.0	2.0	0.0	5.0
Second-Term Queue (Q2), veh/ln	0.0	0.0	0.0	0.0	0.0	0.0	0.0	0.2
Third-Term Queue (Q3), veh/ln	0.0	0.0	0.0	0.0	0.0	0.0	0.0	0.0
Percentile bk-of-que factor (f_B%)	0.000	1.000	0.000	1.000	0.000	1.000	0.000	1.000
Percentile Back of Queue (Q%), veh/ln	0.0	0.9	0.0	0.2	0.0	2.0	0.0	5.2
Percentile Storage Ratio (RQ%)	0.00	0.12	0.00	0.02	0.00	0.25	0.00	0.66
Initial Queue (Qb), veh	0.0	0.0	0.0	0.0	0.0	0.0	0.0	0.0
Final (Residual) Queue (Qe), veh	0.0	0.0	0.0	0.0	0.0	0.0	0.0	0.0
Saturated Delay (ds), s/veh	0.0	0.0	0.0	0.0	0.0	0.0	0.0	0.0
Saturated Queue (Qs), veh	0.0	0.0	0.0	0.0	0.0	0.0	0.0	0.0
Saturated Capacity (cs), veh/h	0.0	0.0	0.0	0.0	0.0	0.0	0.0	0.0
Initial Queue Clear Time (tc), h	0.0	0.0	0.0	0.0	0.0	0.0	0.0	0.0

Intersection Summary	
HCM Average Control Delay	89.6
HCM Level of Service	F

Lane Group	EBT	WBT	NET
Lane Group Flow (vph)	34	68	3758
v/c Ratio	0.45	0.65	0.83
Control Delay	117.4	122.6	7.1
Queue Delay	0.0	0.0	0.0
Total Delay	117.4	122.6	7.1
Queue Length 50th (ft)	48	93	651
Queue Length 95th (ft)	96	159	733
Internal Link Dist (ft)	48	206	515
Turn Bay Length (ft)			
Base Capacity (vph)	92	129	4534
Starvation Cap Reductn	0	0	0
Spillback Cap Reductn	0	0	0
Storage Cap Reductn	0	0	0
Reduced v/c Ratio	0.37	0.53	0.83

Intersection Summary

Movement	EBL	EBT	EBR	WBL	WBT	WBR	NEL	NET	NER	SWL	SWT	SWR
Lane Configurations												
Volume (vph)	15	17	0	0	25	40	37	3530	40	0	0	0
Ideal Flow (vphpl)	1900	1900	1900	1900	1900	1900	1900	1900	1900	1900	1900	1900
Total Lost time (s)		5.0			5.0			5.0				
Lane Util. Factor		1.00			1.00			0.91				
Frpb, ped/bikes		1.00			1.00			1.00				
Flpb, ped/bikes		1.00			1.00			1.00				
Frt		1.00			0.92			1.00				
Flt Protected		0.98			1.00			1.00				
Satd. Flow (prot)		1820			1707			5074				
Flt Permitted		0.67			1.00			1.00				
Satd. Flow (perm)		1256			1707			5074				
Peak-hour factor, PHF	0.96	0.96	0.96	0.96	0.96	0.96	0.96	0.96	0.96	0.96	0.96	0.96
Adj. Flow (vph)	16	18	0	0	26	42	39	3677	42	0	0	0
RTOR Reduction (vph)	0	0	0	0	3	0	0	0	0	0	0	0
Lane Group Flow (vph)	0	34	0	0	65	0	0	3758	0	0	0	0
Confl. Peds. (#/hr)				34								
Turn Type	Perm	NA			NA		Split	NA				
Protected Phases		4			8		2	2				
Permitted Phases	4							2				
Actuated Green, G (s)		13.0			13.0			194.0				
Effective Green, g (s)		13.0			13.0			194.0				
Actuated g/C Ratio		0.06			0.06			0.89				
Clearance Time (s)		5.0			5.0			5.0				
Vehicle Extension (s)		3.0			3.0			3.0				
Lane Grp Cap (vph)		75			102			4536				
v/s Ratio Prot					c0.04			c0.74				
v/s Ratio Perm		0.03										
v/c Ratio		0.45			0.64			0.83				
Uniform Delay, d1		98.6			99.7			4.7				
Progression Factor		1.00			1.00			1.00				
Incremental Delay, d2		4.3			12.4			1.9				
Delay (s)		102.9			112.1			6.6				
Level of Service		F			F			A				
Approach Delay (s)		102.9			112.1			6.6			0.0	
Approach LOS		F			F			A			A	

Intersection Summary			
HCM Average Control Delay	9.3	HCM Level of Service	A
HCM Volume to Capacity ratio	0.82		
Actuated Cycle Length (s)	217.0	Sum of lost time (s)	10.0
Intersection Capacity Utilization	86.6%	ICU Level of Service	E
Analysis Period (min)	15		

c Critical Lane Group

Movement	EBL	EBT	EBR	WBL	WBT	WBR	NEL	NET	NER	SWL	SWT	SWR
Lane Configurations												
Volume (vph)	15	17	0	0	25	40	37	3530	40	0	0	0
Movement Number	7	4	14	3	8	18	5	2	12	1	6	16
Initial Queue, veh	0	0	0	0	0	0	0	0	0	0	0	0
Ped-Bike Adj. Factor (A_pbT)	1.00		1.00	1.00		1.00	1.00		1.00	1.00		1.00
Parking, Bus Adj. Factors	1.00	1.00	1.00	1.00	1.00	1.00	1.00	1.00	1.00	1.00	1.00	1.00
Adj. Sat. Flow Rate, veh/h/ln	1863	1863	1900	1900	1863	1863	1863	1863	1863	1900	1900	1900
Lanes	0	1	0	0	1	0	0	3	0	0	0	0
Lane Assignment												
Capacity, veh/h	42	39	0	0	32	51	49	4932	58	0	0	0
Proportion Arriving On Green	0.05	0.05	0.00	0.00	0.05	0.05	0.90	0.90	0.90	0.00	0.00	0.00
Movement Delay, s/veh	102.3	0.0	0.0	0.0	0.0	122.0	7.4	5.5	5.6	0.0	0.0	0.0
Movement LOS	F					F	A	A	A			
Approach Volume, veh/h		33			68			3757			0	
Approach Delay, s/veh		102.3			122.0			6.2			0.0	
Approach LOS		F			F			A				

Timer:	1	2	3	4	5	6	7	8
Assigned Phase		2		4				8
Case No		12.0		8.0				8.0
Phase Duration (G+Y+Rc), s		199.00		15.64				15.64
Change Period (Y+Rc), s		5.00		5.00				5.00
Max. Allowable Headway (MAH), s		3.91		4.07				4.07
Maximum Green Setting (Gmax), s		194.00		16.00				16.00
Max. Queue Clearance Time (g_c+I1), s		54.13		7.34				10.57
Green Extension Time (g_e), s		80.16		0.15				0.10
Probability of Phase Call (p_c)		1.000		0.998				0.998
Probability of Max Out (p_x)		0.520		0.011				0.265

Left-Turn Movement Data		
Assigned Movement	5	7
Mvmt. Sat Flow, veh/h	53.81	538.46

Through Movement Data		
Assigned Movement	2	4	8
Mvmt. Sat Flow, veh/h	5456.88	610.26	646.26

Right-Turn Movement Data			
Assigned Movement	12	14	18
Mvmt. Sat Flow, veh/h	63.63	0.00	1034.01

Left Lane Group Data								
Assigned Movement	0	5	0	7	0	0	0	0
Lane Assignment		L+T		L+T				
Lanes in Group	0	1	0	1	0	0	0	0
Group Volume (v), veh/h	0.0	1332.4	0.0	33.3	0.0	0.0	0.0	0.0
Group Sat. Flow (s), veh/h/ln	0.0	1860.1	0.0	1148.7	0.0	0.0	0.0	0.0
Queue Serve Time (g_s), s	0.0	52.1	0.0	0.0	0.0	0.0	0.0	0.0
Cycle Queue Clear Time (g_c), s	0.0	52.1	0.0	5.3	0.0	0.0	0.0	0.0

Perm LT Sat Flow Rate (s_l), veh/h/ln	0.0	0.0	0.0	766.6	0.0	0.0	0.0	0.0
Shared LT Sat Flow (s_sh), veh/h/ln	0.0	0.0	0.0	919.5	0.0	0.0	0.0	0.0
Perm LT Eff. Green (g_p), s	0.0	0.0	0.0	10.6	0.0	0.0	0.0	0.0
Perm LT Serve Time (g_u), s	0.0	0.0	0.0	2.1	0.0	0.0	0.0	0.0
Perm LT Que Serve Time (g_ps), s	0.0	0.0	0.0	0.0	0.0	0.0	0.0	0.0
Time to First Blk (g_f), s	0.0	0.0	0.0	2.2	0.0	0.0	0.0	10.6
Serve Time pre Blk (g_fs), s	0.0	0.0	0.0	2.2	0.0	0.0	0.0	0.0
Proportion LT Inside Lane (P_L)	0.000	0.029	0.000	0.469	0.000	0.000	0.000	0.000
Lane Group Capacity (c), veh/h	0.0	1681.2	0.0	81.6	0.0	0.0	0.0	0.0
Volume-to-Capacity Ratio (X)	0.000	0.793	0.000	0.409	0.000	0.000	0.000	0.000
Available Capacity (c_a), veh/h	0.0	1681.2	0.0	109.1	0.0	0.0	0.0	0.0
Upstream Filter Factor (I)	0.000	1.000	0.000	1.000	0.000	0.000	0.000	0.000
Uniform Delay (d1), s/veh	0.0	3.5	0.0	99.0	0.0	0.0	0.0	0.0
Incremental Delay (d2), s/veh	0.0	3.9	0.0	3.3	0.0	0.0	0.0	0.0
Initial Queue Delay (d3), s/veh	0.0	0.0	0.0	0.0	0.0	0.0	0.0	0.0
Control Delay (d), s/veh	0.0	7.4	0.0	102.3	0.0	0.0	0.0	0.0
First-Term Queue (Q1), veh/ln	0.0	13.4	0.0	1.9	0.0	0.0	0.0	0.0
Second-Term Queue (Q2), veh/ln	0.0	1.8	0.0	0.1	0.0	0.0	0.0	0.0
Third-Term Queue (Q3), veh/ln	0.0	0.0	0.0	0.0	0.0	0.0	0.0	0.0
Percentile bk-of-que factor (f_B%)	0.000	1.000	0.000	1.000	0.000	0.000	0.000	0.000
Percentile Back of Queue (Q%), veh/ln	0.0	15.2	0.0	1.9	0.0	0.0	0.0	0.0
Percentile Storage Ratio (RQ%)	0.00	0.71	0.00	0.46	0.00	0.00	0.00	0.00
Initial Queue (Qb), veh	0.0	0.0	0.0	0.0	0.0	0.0	0.0	0.0
Final (Residual) Queue (Qe), veh	0.0	0.0	0.0	0.0	0.0	0.0	0.0	0.0
Saturated Delay (ds), s/veh	0.0	0.0	0.0	0.0	0.0	0.0	0.0	0.0
Saturated Queue (Qs), veh	0.0	0.0	0.0	0.0	0.0	0.0	0.0	0.0
Saturated Capacity (cs), veh/h	0.0	0.0	0.0	0.0	0.0	0.0	0.0	0.0
Initial Queue Clear Time (tc), h	0.0	0.0	0.0	0.0	0.0	0.0	0.0	0.0
Middle Lane Group Data								
Assigned Movement	0	2	0	4	0	0	0	8
Lane Assignment		T						
Lanes in Group	0	1	0	0	0	0	0	0
Group Volume (v), veh/h	0.0	1212.5	0.0	0.0	0.0	0.0	0.0	0.0
Group Sat. Flow (s), veh/h/ln	0.0	1862.7	0.0	0.0	0.0	0.0	0.0	0.0
Queue Serve Time (g_s), s	0.0	38.5	0.0	0.0	0.0	0.0	0.0	0.0
Cycle Queue Clear Time (g_c), s	0.0	38.5	0.0	0.0	0.0	0.0	0.0	0.0
Lane Group Capacity (c), veh/h	0.0	1683.6	0.0	0.0	0.0	0.0	0.0	0.0
Volume-to-Capacity Ratio (X)	0.000	0.720	0.000	0.000	0.000	0.000	0.000	0.000
Available Capacity (c_a), veh/h	0.0	1683.6	0.0	0.0	0.0	0.0	0.0	0.0
Upstream Filter Factor (I)	0.000	1.000	0.000	0.000	0.000	0.000	0.000	0.000
Uniform Delay (d1), s/veh	0.0	2.8	0.0	0.0	0.0	0.0	0.0	0.0
Incremental Delay (d2), s/veh	0.0	2.7	0.0	0.0	0.0	0.0	0.0	0.0
Initial Queue Delay (d3), s/veh	0.0	0.0	0.0	0.0	0.0	0.0	0.0	0.0
Control Delay (d), s/veh	0.0	5.5	0.0	0.0	0.0	0.0	0.0	0.0
First-Term Queue (Q1), veh/ln	0.0	9.9	0.0	0.0	0.0	0.0	0.0	0.0
Second-Term Queue (Q2), veh/ln	0.0	1.3	0.0	0.0	0.0	0.0	0.0	0.0
Third-Term Queue (Q3), veh/ln	0.0	0.0	0.0	0.0	0.0	0.0	0.0	0.0
Percentile bk-of-que factor (f_B%)	0.000	1.000	0.000	1.000	0.000	0.000	0.000	1.000
Percentile Back of Queue (Q%), veh/ln	0.0	11.2	0.0	0.0	0.0	0.0	0.0	0.0
Percentile Storage Ratio (RQ%)	0.00	0.52	0.00	0.00	0.00	0.00	0.00	0.00

Initial Queue (Qb), veh	0.0	0.0	0.0	0.0	0.0	0.0	0.0	0.0
Final (Residual) Queue (Qe), veh	0.0	0.0	0.0	0.0	0.0	0.0	0.0	0.0
Saturated Delay (ds), s/veh	0.0	0.0	0.0	0.0	0.0	0.0	0.0	0.0
Saturated Queue (Qs), veh	0.0	0.0	0.0	0.0	0.0	0.0	0.0	0.0
Saturated Capacity (cs), veh/h	0.0	0.0	0.0	0.0	0.0	0.0	0.0	0.0
Initial Queue Clear Time (tc), h	0.0	0.0	0.0	0.0	0.0	0.0	0.0	0.0
Right Lane Group Data								
Assigned Movement	0	12	0	14	0	0	0	18
Lane Assignment		T+R						T+R
Lanes in Group	0	1	0	0	0	0	0	1
Group Volume (v), veh/h	0.0	1212.5	0.0	0.0	0.0	0.0	0.0	67.7
Group Sat. Flow (s), veh/h/ln	0.0	1851.5	0.0	0.0	0.0	0.0	0.0	1680.3
Queue Serve Time (g_s), s	0.0	39.2	0.0	0.0	0.0	0.0	0.0	8.6
Cycle Queue Clear Time (g_c), s	0.0	39.2	0.0	0.0	0.0	0.0	0.0	8.6
Prot RT Sat Flow Rate (s_R), veh/h/ln	0.0	0.0	0.0	0.0	0.0	0.0	0.0	0.0
Prot RT Eff. Green (g_R), s	0.0	0.0	0.0	0.0	0.0	0.0	0.0	0.0
Proportion RT Outside Lane (P_R)	0.000	0.034	0.000	0.000	0.000	0.000	0.000	0.615
Lane Group Capacity (c), veh/h	0.0	1673.4	0.0	0.0	0.0	0.0	0.0	83.3
Volume-to-Capacity Ratio (X)	0.000	0.725	0.000	0.000	0.000	0.000	0.000	0.813
Available Capacity (c_a), veh/h	0.0	1673.4	0.0	0.0	0.0	0.0	0.0	125.3
Upstream Filter Factor (I)	0.000	1.000	0.000	0.000	0.000	0.000	0.000	1.000
Uniform Delay (d1), s/veh	0.0	2.9	0.0	0.0	0.0	0.0	0.0	101.0
Incremental Delay (d2), s/veh	0.0	2.8	0.0	0.0	0.0	0.0	0.0	21.0
Initial Queue Delay (d3), s/veh	0.0	0.0	0.0	0.0	0.0	0.0	0.0	0.0
Control Delay (d), s/veh	0.0	5.6	0.0	0.0	0.0	0.0	0.0	122.0
First-Term Queue (Q1), veh/ln	0.0	10.0	0.0	0.0	0.0	0.0	0.0	3.8
Second-Term Queue (Q2), veh/ln	0.0	1.3	0.0	0.0	0.0	0.0	0.0	0.5
Third-Term Queue (Q3), veh/ln	0.0	0.0	0.0	0.0	0.0	0.0	0.0	0.0
Percentile bk-of-que factor (f_B%)	0.000	1.000	0.000	1.000	0.000	0.000	0.000	1.000
Percentile Back of Queue (Q%), veh/ln	0.0	11.3	0.0	0.0	0.0	0.0	0.0	4.3
Percentile Storage Ratio (RQ%)	0.00	0.52	0.00	0.00	0.00	0.00	0.00	0.49
Initial Queue (Qb), veh	0.0	0.0	0.0	0.0	0.0	0.0	0.0	0.0
Final (Residual) Queue (Qe), veh	0.0	0.0	0.0	0.0	0.0	0.0	0.0	0.0
Saturated Delay (ds), s/veh	0.0	0.0	0.0	0.0	0.0	0.0	0.0	0.0
Saturated Queue (Qs), veh	0.0	0.0	0.0	0.0	0.0	0.0	0.0	0.0
Saturated Capacity (cs), veh/h	0.0	0.0	0.0	0.0	0.0	0.0	0.0	0.0
Initial Queue Clear Time (tc), h	0.0	0.0	0.0	0.0	0.0	0.0	0.0	0.0
Intersection Summary								
HCM Average Control Delay		9.1						
HCM Level of Service		A						

Lane Group	EBT	WBT	NET
Lane Group Flow (vph)	36	89	3884
v/c Ratio	0.23	0.51	0.91
Control Delay	48.4	56.8	12.7
Queue Delay	0.0	0.0	11.2
Total Delay	48.4	56.8	23.9
Queue Length 50th (ft)	25	62	628
Queue Length 95th (ft)	54	107	#1101
Internal Link Dist (ft)	164	208	477
Turn Bay Length (ft)			
Base Capacity (vph)	240	259	4287
Starvation Cap Reductn	0	0	464
Spillback Cap Reductn	0	0	0
Storage Cap Reductn	0	0	0
Reduced v/c Ratio	0.15	0.34	1.02

Intersection Summary

95th percentile volume exceeds capacity, queue may be longer.
Queue shown is maximum after two cycles.

Movement	EBL	EBT	EBR	WBL	WBT	WBR	NEL	NET	NER	SWL	SWT	SWR
Lane Configurations												
Volume (vph)	9	24	0	0	59	24	17	3540	56	0	0	0
Ideal Flow (vphpl)	1900	1900	1900	1900	1900	1900	1900	1900	1900	1900	1900	1900
Total Lost time (s)		5.0			5.0			5.0				
Lane Util. Factor		1.00			1.00			0.91				
Frt		1.00			0.96			1.00				
Flt Protected		0.99			1.00			1.00				
Satd. Flow (prot)		1837			1789			5072				
Flt Permitted		0.89			1.00			1.00				
Satd. Flow (perm)		1661			1789			5072				
Peak-hour factor, PHF	0.93	0.93	0.93	0.93	0.93	0.93	0.93	0.93	0.93	0.93	0.93	0.93
Adj. Flow (vph)	10	26	0	0	63	26	18	3806	60	0	0	0
RTOR Reduction (vph)	0	0	0	0	1	0	0	1	0	0	0	0
Lane Group Flow (vph)	0	36	0	0	88	0	0	3883	0	0	0	0
Turn Type	Perm	NA			NA		Perm	NA				
Protected Phases		4			8			2				
Permitted Phases	4						2					
Actuated Green, G (s)		9.4			9.4			92.7				
Effective Green, g (s)		9.4			9.4			92.7				
Actuated g/C Ratio		0.08			0.08			0.83				
Clearance Time (s)		5.0			5.0			5.0				
Vehicle Extension (s)		3.0			3.0			3.0				
Lane Grp Cap (vph)		139			150			4194				
v/s Ratio Prot					c0.05							
v/s Ratio Perm		0.02						0.77				
v/c Ratio		0.26			0.59			0.93				
Uniform Delay, d1		48.1			49.5			7.2				
Progression Factor		1.00			1.00			1.00				
Incremental Delay, d2		1.0			5.8			4.7				
Delay (s)		49.1			55.2			11.9				
Level of Service		D			E			B				
Approach Delay (s)		49.1			55.2			11.9			0.0	
Approach LOS		D			E			B			A	

Intersection Summary			
HCM Average Control Delay	13.2	HCM Level of Service	B
HCM Volume to Capacity ratio	0.89		
Actuated Cycle Length (s)	112.1	Sum of lost time (s)	10.0
Intersection Capacity Utilization	86.7%	ICU Level of Service	E
Analysis Period (min)	15		
c Critical Lane Group			

Movement	EBL	EBT	EBR	WBL	WBT	WBR	NEL	NET	NER	SWL	SWT	SWR
Lane Configurations												
Volume (vph)	9	24	0	0	59	24	17	3540	56	0	0	0
Movement Number	7	4	14	3	8	18	5	2	12	1	6	16
Initial Queue, veh	0	0	0	0	0	0	0	0	0	0	0	0
Ped-Bike Adj. Factor (A_pbT)	1.00		1.00	1.00		1.00	1.00		1.00	1.00		1.00
Parking, Bus Adj. Factors	1.00	1.00	1.00	1.00	1.00	1.00	1.00	1.00	1.00	1.00	1.00	1.00
Adj. Sat. Flow Rate, veh/h/ln	1863	1863	1900	1900	1863	1863	1863	1863	1863	1900	1900	1900
Lanes	0	1	0	0	1	0	0	3	0	0	0	0
Lane Assignment												
Capacity, veh/h	63	99	0	0	87	35	36	3614	57	0	0	0
Proportion Arriving On Green	0.07	0.07	0.00	0.00	0.07	0.07	0.83	0.83	0.83	0.00	0.00	0.00
Movement Delay, s/veh	45.3	0.0	0.0	0.0	0.0	54.1	58.7	48.6	51.2	0.0	0.0	0.0
Movement LOS	D					D	F	F	F			
Approach Volume, veh/h		35			89			3885			0	
Approach Delay, s/veh		45.3			54.1			52.0			0.0	
Approach LOS		D			D			D				

Timer:	1	2	3	4	5	6	7	8
Assigned Phase		2		4				8
Case No		8.0		8.0				8.0
Phase Duration (G+Y+Rc), s		89.00		11.97				11.97
Change Period (Y+Rc), s		5.00		5.00				5.00
Max. Allowable Headway (MAH), s		3.91		3.99				3.99
Maximum Green Setting (Gmax), s		84.00		16.00				16.00
Max. Queue Clearance Time (g_c+I1), s		86.00		3.83				6.98
Green Extension Time (g_e), s		0.00		0.25				0.20
Probability of Phase Call (p_c)		1.000		0.970				0.970
Probability of Max Out (p_x)		1.000		0.001				0.010

Left-Turn Movement Data				
Assigned Movement		5		7
Mvmt. Sat Flow, veh/h		20.82		461.23

Through Movement Data				
Assigned Movement		2		4				8
Mvmt. Sat Flow, veh/h		4323.61		1229.96				1259.83

Right-Turn Movement Data				
Assigned Movement		12		14				18
Mvmt. Sat Flow, veh/h		68.09		0.00				512.47

Left Lane Group Data								
Assigned Movement	0	5	0	7	0	0	0	0
Lane Assignment		L+T		L+T				
Lanes in Group	0	1	0	1	0	0	0	0
Group Volume (v), veh/h	0.0	908.2	0.0	35.5	0.0	0.0	0.0	0.0
Group Sat. Flow (s), veh/h/ln	0.0	1034.3	0.0	1691.2	0.0	0.0	0.0	0.0
Queue Serve Time (g_s), s	0.0	0.0	0.0	0.0	0.0	0.0	0.0	0.0
Cycle Queue Clear Time (g_c), s	0.0	84.0	0.0	1.8	0.0	0.0	0.0	0.0

Perm LT Sat Flow Rate (s_l), veh/h/ln	0.0	800.0	0.0	756.2	0.0	0.0	0.0	0.0
Shared LT Sat Flow (s_sh), veh/h/ln	0.0	0.0	0.0	1810.3	0.0	0.0	0.0	0.0
Perm LT Eff. Green (g_p), s	0.0	84.0	0.0	7.0	0.0	0.0	0.0	0.0
Perm LT Serve Time (g_u), s	0.0	0.0	0.0	2.0	0.0	0.0	0.0	0.0
Perm LT Que Serve Time (g_ps), s	0.0	0.0	0.0	0.0	0.0	0.0	0.0	0.0
Time to First Blk (g_f), s	0.0	46.6	0.0	2.8	0.0	0.0	0.0	7.0
Serve Time pre Blk (g_fs), s	0.0	46.6	0.0	1.8	0.0	0.0	0.0	0.0
Proportion LT Inside Lane (P_L)	0.000	0.020	0.000	0.273	0.000	0.000	0.000	0.000
Lane Group Capacity (c), veh/h	0.0	896.9	0.0	162.1	0.0	0.0	0.0	0.0
Volume-to-Capacity Ratio (X)	0.000	1.013	0.000	0.219	0.000	0.000	0.000	0.000
Available Capacity (c_a), veh/h	0.0	896.9	0.0	280.1	0.0	0.0	0.0	0.0
Upstream Filter Factor (I)	0.000	1.000	0.000	1.000	0.000	0.000	0.000	0.000
Uniform Delay (d1), s/veh	0.0	25.5	0.0	44.6	0.0	0.0	0.0	0.0
Incremental Delay (d2), s/veh	0.0	33.2	0.0	0.7	0.0	0.0	0.0	0.0
Initial Queue Delay (d3), s/veh	0.0	0.0	0.0	0.0	0.0	0.0	0.0	0.0
Control Delay (d), s/veh	0.0	58.7	0.0	45.3	0.0	0.0	0.0	0.0
First-Term Queue (Q1), veh/ln	0.0	19.1	0.0	0.8	0.0	0.0	0.0	0.0
Second-Term Queue (Q2), veh/ln	0.0	8.3	0.0	0.0	0.0	0.0	0.0	0.0
Third-Term Queue (Q3), veh/ln	0.0	0.0	0.0	0.0	0.0	0.0	0.0	0.0
Percentile bk-of-que factor (f_B%)	0.000	1.000	0.000	1.000	0.000	0.000	0.000	0.000
Percentile Back of Queue (Q%), veh/ln	0.0	27.4	0.0	0.9	0.0	0.0	0.0	0.0
Percentile Storage Ratio (RQ%)	0.00	1.45	0.00	0.10	0.00	0.00	0.00	0.00
Initial Queue (Qb), veh	0.0	0.0	0.0	0.0	0.0	0.0	0.0	0.0
Final (Residual) Queue (Qe), veh	0.0	2.8	0.0	0.0	0.0	0.0	0.0	0.0
Saturated Delay (ds), s/veh	0.0	0.0	0.0	0.0	0.0	0.0	0.0	0.0
Saturated Queue (Qs), veh	0.0	0.0	0.0	0.0	0.0	0.0	0.0	0.0
Saturated Capacity (cs), veh/h	0.0	0.0	0.0	0.0	0.0	0.0	0.0	0.0
Initial Queue Clear Time (tc), h	0.0	0.3	0.0	0.0	0.0	0.0	0.0	0.0
Middle Lane Group Data								
Assigned Movement	0	2	0	4	0	0	0	8
Lane Assignment		T						
Lanes in Group	0	1	0	0	0	0	0	0
Group Volume (v), veh/h	0.0	1488.4	0.0	0.0	0.0	0.0	0.0	0.0
Group Sat. Flow (s), veh/h/ln	0.0	1695.1	0.0	0.0	0.0	0.0	0.0	0.0
Queue Serve Time (g_s), s	0.0	84.0	0.0	0.0	0.0	0.0	0.0	0.0
Cycle Queue Clear Time (g_c), s	0.0	84.0	0.0	0.0	0.0	0.0	0.0	0.0
Lane Group Capacity (c), veh/h	0.0	1410.2	0.0	0.0	0.0	0.0	0.0	0.0
Volume-to-Capacity Ratio (X)	0.000	1.055	0.000	0.000	0.000	0.000	0.000	0.000
Available Capacity (c_a), veh/h	0.0	1410.2	0.0	0.0	0.0	0.0	0.0	0.0
Upstream Filter Factor (I)	0.000	1.000	0.000	0.000	0.000	0.000	0.000	0.000
Uniform Delay (d1), s/veh	0.0	8.5	0.0	0.0	0.0	0.0	0.0	0.0
Incremental Delay (d2), s/veh	0.0	40.1	0.0	0.0	0.0	0.0	0.0	0.0
Initial Queue Delay (d3), s/veh	0.0	0.0	0.0	0.0	0.0	0.0	0.0	0.0
Control Delay (d), s/veh	0.0	48.6	0.0	0.0	0.0	0.0	0.0	0.0
First-Term Queue (Q1), veh/ln	0.0	15.4	0.0	0.0	0.0	0.0	0.0	0.0
Second-Term Queue (Q2), veh/ln	0.0	15.7	0.0	0.0	0.0	0.0	0.0	0.0
Third-Term Queue (Q3), veh/ln	0.0	0.0	0.0	0.0	0.0	0.0	0.0	0.0
Percentile bk-of-que factor (f_B%)	0.000	1.000	0.000	1.000	0.000	0.000	0.000	1.000
Percentile Back of Queue (Q%), veh/ln	0.0	31.0	0.0	0.0	0.0	0.0	0.0	0.0
Percentile Storage Ratio (RQ%)	0.00	1.64	0.00	0.00	0.00	0.00	0.00	0.00

Initial Queue (Qb), veh	0.0	0.0	0.0	0.0	0.0	0.0	0.0	0.0
Final (Residual) Queue (Qe), veh	0.0	19.5	0.0	0.0	0.0	0.0	0.0	0.0
Saturated Delay (ds), s/veh	0.0	0.0	0.0	0.0	0.0	0.0	0.0	0.0
Saturated Queue (Qs), veh	0.0	0.0	0.0	0.0	0.0	0.0	0.0	0.0
Saturated Capacity (cs), veh/h	0.0	0.0	0.0	0.0	0.0	0.0	0.0	0.0
Initial Queue Clear Time (tc), h	0.0	0.3	0.0	0.0	0.0	0.0	0.0	0.0
Right Lane Group Data								
Assigned Movement	0	12	0	14	0	0	0	18
Lane Assignment		T+R						T+R
Lanes in Group	0	1	0	0	0	0	0	1
Group Volume (v), veh/h	0.0	1488.4	0.0	0.0	0.0	0.0	0.0	89.2
Group Sat. Flow (s), veh/h/ln	0.0	1683.1	0.0	0.0	0.0	0.0	0.0	1772.3
Queue Serve Time (g_s), s	0.0	84.0	0.0	0.0	0.0	0.0	0.0	5.0
Cycle Queue Clear Time (g_c), s	0.0	84.0	0.0	0.0	0.0	0.0	0.0	5.0
Prot RT Sat Flow Rate (s_R), veh/h/ln	0.0	0.0	0.0	0.0	0.0	0.0	0.0	0.0
Prot RT Eff. Green (g_R), s	0.0	0.0	0.0	0.0	0.0	0.0	0.0	0.0
Proportion RT Outside Lane (P_R)	0.000	0.040	0.000	0.000	0.000	0.000	0.000	0.289
Lane Group Capacity (c), veh/h	0.0	1400.2	0.0	0.0	0.0	0.0	0.0	122.3
Volume-to-Capacity Ratio (X)	0.000	1.063	0.000	0.000	0.000	0.000	0.000	0.730
Available Capacity (c_a), veh/h	0.0	1400.2	0.0	0.0	0.0	0.0	0.0	280.8
Upstream Filter Factor (I)	0.000	1.000	0.000	0.000	0.000	0.000	0.000	1.000
Uniform Delay (d1), s/veh	0.0	8.5	0.0	0.0	0.0	0.0	0.0	46.1
Incremental Delay (d2), s/veh	0.0	42.7	0.0	0.0	0.0	0.0	0.0	8.0
Initial Queue Delay (d3), s/veh	0.0	0.0	0.0	0.0	0.0	0.0	0.0	0.0
Control Delay (d), s/veh	0.0	51.2	0.0	0.0	0.0	0.0	0.0	54.1
First-Term Queue (Q1), veh/ln	0.0	15.2	0.0	0.0	0.0	0.0	0.0	2.2
Second-Term Queue (Q2), veh/ln	0.0	16.6	0.0	0.0	0.0	0.0	0.0	0.3
Third-Term Queue (Q3), veh/ln	0.0	0.0	0.0	0.0	0.0	0.0	0.0	0.0
Percentile bk-of-que factor (f_B%)	0.000	1.000	0.000	1.000	0.000	0.000	0.000	1.000
Percentile Back of Queue (Q%), veh/ln	0.0	31.9	0.0	0.0	0.0	0.0	0.0	2.5
Percentile Storage Ratio (RQ%)	0.00	1.69	0.00	0.00	0.00	0.00	0.00	0.27
Initial Queue (Qb), veh	0.0	0.0	0.0	0.0	0.0	0.0	0.0	0.0
Final (Residual) Queue (Qe), veh	0.0	22.0	0.0	0.0	0.0	0.0	0.0	0.0
Saturated Delay (ds), s/veh	0.0	0.0	0.0	0.0	0.0	0.0	0.0	0.0
Saturated Queue (Qs), veh	0.0	0.0	0.0	0.0	0.0	0.0	0.0	0.0
Saturated Capacity (cs), veh/h	0.0	0.0	0.0	0.0	0.0	0.0	0.0	0.0
Initial Queue Clear Time (tc), h	0.0	0.3	0.0	0.0	0.0	0.0	0.0	0.0
Intersection Summary								
HCM Average Control Delay		51.9						
HCM Level of Service		D						

Movement	EBL	EBR	NBL	NBT	SBT	SBR
Lane Configurations						
Volume (veh/h)	10	5	23	363	113	33
Sign Control	Stop			Free	Free	
Grade	0%			0%	0%	
Peak Hour Factor	0.92	0.92	0.92	0.92	0.92	0.92
Hourly flow rate (vph)	11	5	25	395	123	36
Pedestrians						
Lane Width (ft)						
Walking Speed (ft/s)						
Percent Blockage						
Right turn flare (veh)						
Median type				None	None	
Median storage veh)						
Upstream signal (ft)				296		
pX, platoon unblocked						
vC, conflicting volume	585	141	159			
vC1, stage 1 conf vol						
vC2, stage 2 conf vol						
vCu, unblocked vol	585	141	159			
tC, single (s)	6.4	6.2	4.1			
tC, 2 stage (s)						
tF (s)	3.5	3.3	2.2			
p0 queue free %	98	99	98			
cM capacity (veh/h)	465	907	1421			

Direction, Lane #	EB 1	NB 1	SB 1
Volume Total	16	420	159
Volume Left	11	25	0
Volume Right	5	0	36
cSH	555	1421	1700
Volume to Capacity	0.03	0.02	0.09
Queue Length 95th (ft)	2	1	0
Control Delay (s)	11.7	0.6	0.0
Lane LOS	B	A	
Approach Delay (s)	11.7	0.6	0.0
Approach LOS	B		

Intersection Summary			
Average Delay	0.8		
Intersection Capacity Utilization	41.7%	ICU Level of Service	A
Analysis Period (min)	15		

Movement	EBL	EBR	NBL	NBT	SBT	SBR
Lane Configurations						
Volume (veh/h)	11	1	11	370	145	1
Sign Control	Stop			Free	Free	
Grade	0%			0%	0%	
Peak Hour Factor	0.92	0.92	0.92	0.92	0.92	0.92
Hourly flow rate (vph)	12	1	12	402	158	1
Pedestrians						
Lane Width (ft)						
Walking Speed (ft/s)						
Percent Blockage						
Right turn flare (veh)						
Median type				None	None	
Median storage veh)						
Upstream signal (ft)				581		
pX, platoon unblocked						
vC, conflicting volume	584	158	159			
vC1, stage 1 conf vol						
vC2, stage 2 conf vol						
vCu, unblocked vol	584	158	159			
tC, single (s)	6.4	6.2	4.1			
tC, 2 stage (s)						
tF (s)	3.5	3.3	2.2			
p0 queue free %	97	100	99			
cM capacity (veh/h)	470	887	1421			

Direction, Lane #	EB 1	NB 1	SB 1
Volume Total	13	414	159
Volume Left	12	12	0
Volume Right	1	0	1
cSH	489	1421	1700
Volume to Capacity	0.03	0.01	0.09
Queue Length 95th (ft)	2	1	0
Control Delay (s)	12.6	0.3	0.0
Lane LOS	B	A	
Approach Delay (s)	12.6	0.3	0.0
Approach LOS	B		

Intersection Summary			
Average Delay	0.5		
Intersection Capacity Utilization	38.3%	ICU Level of Service	A
Analysis Period (min)	15		

Movement	EBL	EBR	NBL	NBT	SBT	SBR
Lane Configurations						
Volume (veh/h)	29	11	9	365	136	5
Sign Control	Stop			Free	Free	
Grade	0%			0%	0%	
Peak Hour Factor	0.92	0.92	0.92	0.92	0.92	0.92
Hourly flow rate (vph)	32	12	10	397	148	5
Pedestrians						
Lane Width (ft)						
Walking Speed (ft/s)						
Percent Blockage						
Right turn flare (veh)						
Median type				None	None	
Median storage veh)						
Upstream signal (ft)				866		
pX, platoon unblocked						
vC, conflicting volume	567	151	153			
vC1, stage 1 conf vol						
vC2, stage 2 conf vol						
vCu, unblocked vol	567	151	153			
tC, single (s)	6.4	6.2	4.1			
tC, 2 stage (s)						
tF (s)	3.5	3.3	2.2			
p0 queue free %	93	99	99			
cM capacity (veh/h)	482	896	1427			

Direction, Lane #	EB 1	NB 1	SB 1
Volume Total	43	407	153
Volume Left	32	10	0
Volume Right	12	0	5
cSH	552	1427	1700
Volume to Capacity	0.08	0.01	0.09
Queue Length 95th (ft)	6	1	0
Control Delay (s)	12.1	0.2	0.0
Lane LOS	B	A	
Approach Delay (s)	12.1	0.2	0.0
Approach LOS	B		

Intersection Summary			
Average Delay	1.0		
Intersection Capacity Utilization	36.4%	ICU Level of Service	A
Analysis Period (min)	15		

Movement	EBL	EBR	NBL	NBT	SBT	SBR
Lane Configurations						
Volume (veh/h)	28	23	22	345	106	17
Sign Control	Stop			Free	Free	
Grade	0%			0%	0%	
Peak Hour Factor	0.92	0.92	0.92	0.92	0.92	0.92
Hourly flow rate (vph)	30	25	24	375	115	18
Pedestrians						
Lane Width (ft)						
Walking Speed (ft/s)						
Percent Blockage						
Right turn flare (veh)						
Median type				None	None	
Median storage veh)						
Upstream signal (ft)						
pX, platoon unblocked						
vC, conflicting volume	547	124	134			
vC1, stage 1 conf vol						
vC2, stage 2 conf vol						
vCu, unblocked vol	547	124	134			
tC, single (s)	6.4	6.2	4.1			
tC, 2 stage (s)						
tF (s)	3.5	3.3	2.2			
p0 queue free %	94	97	98			
cM capacity (veh/h)	490	926	1451			

Direction, Lane #	EB 1	NB 1	SB 1
Volume Total	55	399	134
Volume Left	30	24	0
Volume Right	25	0	18
cSH	622	1451	1700
Volume to Capacity	0.09	0.02	0.08
Queue Length 95th (ft)	7	1	0
Control Delay (s)	11.4	0.6	0.0
Lane LOS	B	A	
Approach Delay (s)	11.4	0.6	0.0
Approach LOS	B		

Intersection Summary			
Average Delay	1.5		
Intersection Capacity Utilization	39.3%	ICU Level of Service	A
Analysis Period (min)	15		

Movement	EBL	EBT	EBR	WBL	WBT	WBR	NBL	NBT	NBR	SBL	SBT	SBR
Lane Configurations												
Sign Control		Stop			Stop			Stop			Stop	
Volume (vph)	5	134	91	44	127	8	22	278	21	4	7	1
Peak Hour Factor	0.92	0.92	0.92	0.92	0.92	0.92	0.92	0.92	0.92	0.92	0.92	0.92
Hourly flow rate (vph)	5	146	99	48	138	9	24	302	23	4	8	1

Direction, Lane #	EB 1	WB 1	NB 1	SB 1
Volume Total (vph)	250	195	349	13
Volume Left (vph)	5	48	24	4
Volume Right (vph)	99	9	23	1
Hadj (s)	-0.20	0.06	0.01	0.05
Departure Headway (s)	5.0	5.3	5.1	5.7
Degree Utilization, x	0.35	0.29	0.49	0.02
Capacity (veh/h)	671	629	666	544
Control Delay (s)	10.6	10.4	12.9	8.8
Approach Delay (s)	10.6	10.4	12.9	8.8
Approach LOS	B	B	B	A

Intersection Summary			
Delay	11.5		
HCM Level of Service	B		
Intersection Capacity Utilization	50.2%	ICU Level of Service	A
Analysis Period (min)	15		

HCM Unsignalized Intersection Capacity Analysis
1: SW 97th Ave. & SW 174th St.

2/18/2015

Movement	EBL	EBT	EBR	WBL	WBT	WBR	NBL	NBT	NBR	SBL	SBT	SBR
Lane Configurations												
Sign Control		Stop			Stop			Stop			Stop	
Volume (vph)	3	134	38	53	314	2	26	13	14	124	170	17
Peak Hour Factor	0.84	0.84	0.84	0.84	0.84	0.84	0.84	0.84	0.84	0.84	0.84	0.84
Hourly flow rate (vph)	4	160	45	63	374	2	31	15	17	148	202	20

Direction, Lane #	EB 1	WB 1	NB 1	SB 1
Volume Total (vph)	208	439	63	370
Volume Left (vph)	4	63	31	148
Volume Right (vph)	45	2	17	20
Hadj (s)	-0.09	0.06	-0.03	0.08
Departure Headway (s)	6.0	5.8	6.7	6.0
Degree Utilization, x	0.35	0.70	0.12	0.62
Capacity (veh/h)	542	603	438	564
Control Delay (s)	12.2	21.2	10.6	18.4
Approach Delay (s)	12.2	21.2	10.6	18.4
Approach LOS	B	C	B	C

Intersection Summary			
Delay	17.9		
HCM Level of Service	C		
Intersection Capacity Utilization	58.9%	ICU Level of Service	B
Analysis Period (min)	15		

Lane Group	EBL	EBR	NBL	NBT	NBR	SBT	NET
Lane Group Flow (vph)	13	178	5	21	348	210	2923
v/c Ratio	0.08	0.73	0.06	0.06	0.22	0.59	0.78
Control Delay	90.4	112.8	91.4	89.0	0.3	99.8	19.4
Queue Delay	0.0	0.0	0.0	0.0	0.0	0.0	0.7
Total Delay	90.4	112.8	91.4	89.0	0.3	99.8	20.1
Queue Length 50th (ft)	17	142	7	14	0	152	877
Queue Length 95th (ft)	44	196	25	32	0	209	989
Internal Link Dist (ft)	257			1041		665	1300
Turn Bay Length (ft)					200		
Base Capacity (vph)	198	311	77	362	1583	358	3756
Starvation Cap Reductn	0	0	0	0	0	0	459
Spillback Cap Reductn	0	0	0	0	0	0	0
Storage Cap Reductn	0	0	0	0	0	0	0
Reduced v/c Ratio	0.07	0.57	0.06	0.06	0.22	0.59	0.89

Intersection Summary

Movement	EBL	EBR	NBL	NBT	NBR	SBT	SBR	NEL2	NEL	NET	NER
Lane Configurations											
Volume (vph)	12	169	5	20	331	184	15	5	6	2737	29
Ideal Flow (vphpl)	1900	1900	1900	1900	1900	1900	1900	1900	1900	1900	1900
Total Lost time (s)	5.0	5.0	5.0	5.0	4.0	5.0				5.0	
Lane Util. Factor	1.00	0.88	1.00	0.95	1.00	0.95				0.91	
Frt	1.00	0.85	1.00	1.00	0.85	0.99				1.00	
Flt Protected	0.95	1.00	0.95	1.00	1.00	1.00				1.00	
Satd. Flow (prot)	1770	2787	1770	3539	1583	3499				5076	
Flt Permitted	0.95	1.00	0.41	1.00	1.00	1.00				1.00	
Satd. Flow (perm)	1770	2787	755	3539	1583	3499				5076	
Peak-hour factor, PHF	0.95	0.95	0.95	0.95	0.95	0.95	0.95	0.95	0.95	0.95	0.95
Adj. Flow (vph)	13	178	5	21	348	194	16	5	6	2881	31
RTOR Reduction (vph)	0	0	0	0	0	0	0	0	0	1	0
Lane Group Flow (vph)	13	178	5	21	348	210	0	0	0	2922	0
Turn Type	NA	Perm	Perm	NA	Free	NA		Perm	Perm	NA	
Protected Phases	3			4		8				6	
Permitted Phases		3	4		Free			6	6		
Actuated Green, G (s)	18.8	18.8	22.0	22.0	214.8	22.0				159.0	
Effective Green, g (s)	18.8	18.8	22.0	22.0	214.8	22.0				159.0	
Actuated g/C Ratio	0.09	0.09	0.10	0.10	1.00	0.10				0.74	
Clearance Time (s)	5.0	5.0	5.0	5.0		5.0				5.0	
Vehicle Extension (s)	3.0	3.0	3.0	3.0		3.0				3.0	
Lane Grp Cap (vph)	155	244	77	362	1583	358				3757	
v/s Ratio Prot	0.01			0.01		c0.06					
v/s Ratio Perm		c0.06	0.01		0.22					0.58	
v/c Ratio	0.08	0.73	0.06	0.06	0.22	0.59				0.78	
Uniform Delay, d1	90.1	95.5	87.1	87.0	0.0	92.1				17.1	
Progression Factor	1.00	1.00	1.00	1.00	1.00	1.00				1.00	
Incremental Delay, d2	0.2	10.4	1.6	0.3	0.3	6.9				1.7	
Delay (s)	90.3	105.9	88.7	87.3	0.3	98.9				18.7	
Level of Service	F	F	F	F	A	F				B	
Approach Delay (s)	104.9			6.4		98.9				18.7	
Approach LOS	F			A		F				B	

Intersection Summary			
HCM Average Control Delay	26.5	HCM Level of Service	C
HCM Volume to Capacity ratio	0.75		
Actuated Cycle Length (s)	214.8	Sum of lost time (s)	15.0
Intersection Capacity Utilization	78.0%	ICU Level of Service	D
Analysis Period (min)	15		
c Critical Lane Group			

Movement	EBL	EBR	NBL	NBT	SBT	SBR
Lane Configurations						
Volume (veh/h)	48	45	36	310	254	77
Sign Control	Stop			Free	Free	
Grade	0%			0%	0%	
Peak Hour Factor	0.93	0.93	0.93	0.93	0.93	0.93
Hourly flow rate (vph)	52	48	39	333	273	83
Pedestrians						
Lane Width (ft)						
Walking Speed (ft/s)						
Percent Blockage						
Right turn flare (veh)						
Median type				None	None	
Median storage veh)						
Upstream signal (ft)					1121	
pX, platoon unblocked	0.93	0.93	0.93			
vC, conflicting volume	725	315	356			
vC1, stage 1 conf vol						
vC2, stage 2 conf vol						
vCu, unblocked vol	662	218	263			
tC, single (s)	6.4	6.2	4.1			
tC, 2 stage (s)						
tF (s)	3.5	3.3	2.2			
p0 queue free %	86	94	97			
cM capacity (veh/h)	382	760	1203			

Direction, Lane #	EB 1	NB 1	SB 1
Volume Total	100	372	356
Volume Left	52	39	0
Volume Right	48	0	83
cSH	503	1203	1700
Volume to Capacity	0.20	0.03	0.21
Queue Length 95th (ft)	18	2	0
Control Delay (s)	13.9	1.1	0.0
Lane LOS	B	A	
Approach Delay (s)	13.9	1.1	0.0
Approach LOS	B		

Intersection Summary			
Average Delay	2.2		
Intersection Capacity Utilization	51.8%	ICU Level of Service	A
Analysis Period (min)	15		

Movement	WBL	WBR	NBT	NBR	SBL	SBT
Lane Configurations						
Volume (veh/h)	137	49	284	28	33	240
Sign Control	Stop		Free			Free
Grade	0%		0%			0%
Peak Hour Factor	0.97	0.97	0.97	0.97	0.97	0.97
Hourly flow rate (vph)	141	51	293	29	34	247
Pedestrians						
Lane Width (ft)						
Walking Speed (ft/s)						
Percent Blockage						
Right turn flare (veh)						
Median type			None			None
Median storage veh)						
Upstream signal (ft)						
pX, platoon unblocked						
vC, conflicting volume	623	307			322	
vC1, stage 1 conf vol						
vC2, stage 2 conf vol						
vCu, unblocked vol	623	307			322	
tC, single (s)	6.4	6.2			4.1	
tC, 2 stage (s)						
tF (s)	3.5	3.3			2.2	
p0 queue free %	68	93			97	
cM capacity (veh/h)	438	733			1238	

Direction, Lane #	WB 1	NB 1	SB 1
Volume Total	192	322	281
Volume Left	141	0	34
Volume Right	51	29	0
cSH	490	1700	1238
Volume to Capacity	0.39	0.19	0.03
Queue Length 95th (ft)	46	0	2
Control Delay (s)	17.0	0.0	1.2
Lane LOS	C		A
Approach Delay (s)	17.0	0.0	1.2
Approach LOS	C		

Intersection Summary			
Average Delay	4.5		
Intersection Capacity Utilization	51.7%	ICU Level of Service	A
Analysis Period (min)	15		

Movement	EBL	EBR	NBL	NBT	SBT	SBR
Lane Configurations						
Volume (veh/h)	25	33	10	346	281	93
Sign Control	Stop			Free	Free	
Grade	0%			0%	0%	
Peak Hour Factor	0.94	0.94	0.94	0.94	0.94	0.94
Hourly flow rate (vph)	27	35	11	368	299	99
Pedestrians						
Lane Width (ft)						
Walking Speed (ft/s)						
Percent Blockage						
Right turn flare (veh)						
Median type				None	None	
Median storage veh)						
Upstream signal (ft)				1230		
pX, platoon unblocked						
vC, conflicting volume	738	348	398			
vC1, stage 1 conf vol						
vC2, stage 2 conf vol						
vCu, unblocked vol	738	348	398			
tC, single (s)	6.4	6.2	4.1			
tC, 2 stage (s)						
tF (s)	3.5	3.3	2.2			
p0 queue free %	93	95	99			
cM capacity (veh/h)	382	695	1161			

Direction, Lane #	EB 1	NB 1	SB 1
Volume Total	62	379	398
Volume Left	27	11	0
Volume Right	35	0	99
cSH	513	1161	1700
Volume to Capacity	0.12	0.01	0.23
Queue Length 95th (ft)	10	1	0
Control Delay (s)	13.0	0.3	0.0
Lane LOS	B	A	
Approach Delay (s)	13.0	0.3	0.0
Approach LOS	B		

Intersection Summary			
Average Delay	1.1		
Intersection Capacity Utilization	36.3%	ICU Level of Service	A
Analysis Period (min)	15		

Movement	EBL	EBT	EBR	WBL	WBT	WBR	NBL	NBT	NBR	SBL	SBT	SBR
Lane Configurations												
Volume (veh/h)	52	2	24	53	31	2	9	265	36	1	257	53
Sign Control		Stop			Stop			Free			Free	
Grade		0%			0%			0%			0%	
Peak Hour Factor	0.92	0.92	0.92	0.92	0.92	0.92	0.92	0.92	0.92	0.92	0.92	0.92
Hourly flow rate (vph)	57	2	26	58	34	2	10	288	39	1	279	58
Pedestrians												
Lane Width (ft)												
Walking Speed (ft/s)												
Percent Blockage												
Right turn flare (veh)												
Median type								None			None	
Median storage veh)												
Upstream signal (ft)								904				
pX, platoon unblocked	0.97	0.97		0.97	0.97	0.97				0.97		
vC, conflicting volume	657	657	308	665	666	308	337			327		
vC1, stage 1 conf vol												
vC2, stage 2 conf vol												
vCu, unblocked vol	630	630	308	638	640	270	337			290		
tC, single (s)	7.1	6.5	6.2	7.1	6.5	6.2	4.1			4.1		
tC, 2 stage (s)												
tF (s)	3.5	4.0	3.3	3.5	4.0	3.3	2.2			2.2		
p0 queue free %	84	99	96	84	91	100	99			100		
cM capacity (veh/h)	353	383	732	360	378	745	1222			1233		

Direction, Lane #	EB 1	WB 1	NB 1	SB 1
Volume Total	85	93	337	338
Volume Left	57	58	10	1
Volume Right	26	2	39	58
cSH	421	371	1222	1233
Volume to Capacity	0.20	0.25	0.01	0.00
Queue Length 95th (ft)	19	25	1	0
Control Delay (s)	15.7	18.0	0.3	0.0
Lane LOS	C	C	A	A
Approach Delay (s)	15.7	18.0	0.3	0.0
Approach LOS	C	C		

Intersection Summary			
Average Delay	3.7		
Intersection Capacity Utilization	35.0%	ICU Level of Service	A
Analysis Period (min)	15		

Movement	EBL	EBT	EBR	WBL	WBT	WBR	NBL	NBT	NBR	SBL	SBT	SBR
Lane Configurations												
Volume (veh/h)	6	3	4	19	1	1	5	299	11	0	330	6
Sign Control		Stop			Stop			Free			Free	
Grade		0%			0%			0%			0%	
Peak Hour Factor	0.95	0.95	0.95	0.95	0.95	0.95	0.95	0.95	0.95	0.95	0.95	0.95
Hourly flow rate (vph)	6	3	4	20	1	1	5	315	12	0	347	6
Pedestrians												
Lane Width (ft)												
Walking Speed (ft/s)												
Percent Blockage												
Right turn flare (veh)												
Median type								None			None	
Median storage veh)												
Upstream signal (ft)								601				
pX, platoon unblocked	0.90	0.90		0.90	0.90	0.90				0.90		
vC, conflicting volume	683	687	351	687	685	321	354			326		
vC1, stage 1 conf vol												
vC2, stage 2 conf vol												
vCu, unblocked vol	593	598	351	598	595	191	354			197		
tC, single (s)	7.1	6.5	6.2	7.1	6.5	6.2	4.1			4.1		
tC, 2 stage (s)												
tF (s)	3.5	4.0	3.3	3.5	4.0	3.3	2.2			2.2		
p0 queue free %	98	99	99	95	100	100	100			100		
cM capacity (veh/h)	373	373	693	367	374	766	1205			1239		

Direction, Lane #	EB 1	WB 1	NB 1	SB 1
Volume Total	14	22	332	354
Volume Left	6	20	5	0
Volume Right	4	1	12	6
cSH	435	377	1205	1239
Volume to Capacity	0.03	0.06	0.00	0.00
Queue Length 95th (ft)	2	5	0	0
Control Delay (s)	13.5	15.1	0.2	0.0
Lane LOS	B	C	A	
Approach Delay (s)	13.5	15.1	0.2	0.0
Approach LOS	B	C		

Intersection Summary			
Average Delay	0.8		
Intersection Capacity Utilization	30.4%	ICU Level of Service	A
Analysis Period (min)	15		

Movement	EBL	EBT	EBR	WBL	WBT	WBR	NBL	NBT	NBR	SBL	SBT	SBR
Lane Configurations												
Volume (veh/h)	8	29	77	13	66	1	12	307	17	5	289	59
Sign Control		Stop			Stop			Free			Free	
Grade		0%			0%			0%			0%	
Peak Hour Factor	0.97	0.97	0.97	0.97	0.97	0.97	0.97	0.97	0.97	0.97	0.97	0.97
Hourly flow rate (vph)	8	30	79	13	68	1	12	316	18	5	298	61
Pedestrians												
Lane Width (ft)												
Walking Speed (ft/s)												
Percent Blockage												
Right turn flare (veh)												
Median type								None			None	
Median storage veh)												
Upstream signal (ft)								300				
pX, platoon unblocked	0.84	0.84		0.84	0.84	0.84				0.84		
vC, conflicting volume	724	697	328	783	719	325	359			334		
vC1, stage 1 conf vol												
vC2, stage 2 conf vol												
vCu, unblocked vol	571	540	328	642	565	94	359			105		
tC, single (s)	7.1	6.5	6.2	7.1	6.5	6.2	4.1			4.1		
tC, 2 stage (s)												
tF (s)	3.5	4.0	3.3	3.5	4.0	3.3	2.2			2.2		
p0 queue free %	97	92	89	95	81	100	99			100		
cM capacity (veh/h)	304	370	713	267	357	804	1200			1242		

Direction, Lane #	EB 1	WB 1	NB 1	SB 1
Volume Total	118	82	346	364
Volume Left	8	13	12	5
Volume Right	79	1	18	61
cSH	536	341	1200	1242
Volume to Capacity	0.22	0.24	0.01	0.00
Queue Length 95th (ft)	21	23	1	0
Control Delay (s)	13.6	18.9	0.4	0.2
Lane LOS	B	C	A	A
Approach Delay (s)	13.6	18.9	0.4	0.2
Approach LOS	B	C		

Intersection Summary			
Average Delay	3.7		
Intersection Capacity Utilization	38.3%	ICU Level of Service	A
Analysis Period (min)	15		

Lane Group	EBL	EBT	EBR	WBL	WBT	NBL	NBT	SBL	SBT
Lane Group Flow (vph)	170	564	103	224	538	205	410	25	389
v/c Ratio	0.30	0.55	0.27	0.40	0.54	0.49	0.51	0.06	0.52
Control Delay	17.0	27.6	15.9	24.5	41.1	32.0	32.4	31.3	46.8
Queue Delay	0.0	0.0	0.0	0.0	0.0	0.0	0.0	0.0	0.0
Total Delay	17.0	27.6	15.9	24.5	41.1	32.0	32.4	31.3	46.8
Queue Length 50th (ft)	64	120	13	109	189	109	91	13	140
Queue Length 95th (ft)	132	204	70	204	313	211	164	41	244
Internal Link Dist (ft)		1441			531		229		156
Turn Bay Length (ft)	130			95		155		130	
Base Capacity (vph)	801	1927	767	660	1899	699	1418	588	1416
Starvation Cap Reductn	0	0	0	0	31	0	0	0	0
Spillback Cap Reductn	0	0	0	0	0	0	0	0	0
Storage Cap Reductn	0	0	0	0	0	0	0	0	0
Reduced v/c Ratio	0.21	0.29	0.13	0.34	0.29	0.29	0.29	0.04	0.27

Intersection Summary

Movement	EBL	EBT	EBR	WBL	WBT	WBR	NBL	NBT	NBR	SBL	SBT	SBR
Lane Configurations												
Volume (vph)	155	513	94	204	467	23	187	213	160	23	314	40
Ideal Flow (vphpl)	1900	1900	1900	1900	1900	1900	1900	1900	1900	1900	1900	1900
Total Lost time (s)	3.0	3.0	5.0	3.0	3.0		3.0	3.0		3.0	3.0	
Lane Util. Factor	1.00	0.95	1.00	1.00	0.95		1.00	0.95		1.00	0.95	
Frt	1.00	1.00	0.85	1.00	0.99		1.00	0.94		1.00	0.98	
Flt Protected	0.95	1.00	1.00	0.95	1.00		0.95	1.00		0.95	1.00	
Satd. Flow (prot)	1770	3539	1583	1770	3515		1770	3311		1770	3479	
Flt Permitted	0.35	1.00	1.00	0.44	1.00		0.42	1.00		0.51	1.00	
Satd. Flow (perm)	643	3539	1583	820	3515		783	3311		953	3479	
Peak-hour factor, PHF	0.91	0.91	0.91	0.91	0.91	0.91	0.91	0.91	0.91	0.91	0.91	0.91
Adj. Flow (vph)	170	564	103	224	513	25	205	234	176	25	345	44
RTOR Reduction (vph)	0	0	66	0	1	0	0	64	0	0	5	0
Lane Group Flow (vph)	170	564	37	224	537	0	205	346	0	25	384	0
Turn Type	custom	NA	custom	custom	NA		custom	NA		custom	NA	
Protected Phases	1 2	2 4		1 3	3 4		5 6	6 8		5 7	7 8	
Permitted Phases	4		4	4			8			8		
Actuated Green, G (s)	55.0	34.0	24.7	50.9	32.9		39.2	25.3		36.7	25.8	
Effective Green, g (s)	55.0	34.0	24.7	50.9	32.9		39.2	25.3		36.7	25.8	
Actuated g/C Ratio	0.44	0.27	0.20	0.41	0.27		0.32	0.20		0.30	0.21	
Clearance Time (s)			5.0									
Vehicle Extension (s)			3.0									
Lane Grp Cap (vph)	560	970	315	537	932		399	675		391	723	
v/s Ratio Prot	0.07	c0.16		c0.09	c0.15		c0.08	0.10		0.01	c0.11	
v/s Ratio Perm	0.06		0.02	0.08			0.08			0.01		
v/c Ratio	0.30	0.58	0.12	0.42	0.58		0.51	0.51		0.06	0.53	
Uniform Delay, d1	21.5	38.9	40.7	24.7	39.5		32.9	43.9		31.2	43.8	
Progression Factor	1.00	1.00	1.00	1.00	1.00		1.00	1.00		1.00	1.00	
Incremental Delay, d2	0.3	0.9	0.2	0.5	0.9		1.1	0.7		0.1	0.8	
Delay (s)	21.8	39.8	40.9	25.2	40.4		34.0	44.6		31.3	44.5	
Level of Service	C	D	D	C	D		C	D		C	D	
Approach Delay (s)		36.3			36.0			41.1			43.7	
Approach LOS		D			D			D			D	

Intersection Summary			
HCM Average Control Delay	38.5	HCM Level of Service	D
HCM Volume to Capacity ratio	0.51		
Actuated Cycle Length (s)	124.1	Sum of lost time (s)	15.0
Intersection Capacity Utilization	59.1%	ICU Level of Service	B
Analysis Period (min)	15		
c Critical Lane Group			

Lane Group	EBL	EBT	WBT	SBL
Lane Group Flow (vph)	268	551	660	210
v/c Ratio	1.07	0.36	0.44	0.25
Control Delay	107.0	21.4	22.3	18.8
Queue Delay	0.2	0.0	0.0	0.0
Total Delay	107.2	21.4	22.3	18.8
Queue Length 50th (ft)	~210	135	167	71
Queue Length 95th (ft)	#382	173	210	176
Internal Link Dist (ft)		531	201	216
Turn Bay Length (ft)	75			
Base Capacity (vph)	587	3539	3514	824
Starvation Cap Reductn	54	299	0	0
Spillback Cap Reductn	0	0	0	0
Storage Cap Reductn	0	0	0	0
Reduced v/c Ratio	0.50	0.17	0.19	0.25

Intersection Summary

~ Volume exceeds capacity, queue is theoretically infinite.
Queue shown is maximum after two cycles.

95th percentile volume exceeds capacity, queue may be longer.
Queue shown is maximum after two cycles.

Movement	EBL	EBT	WBT	WBR	SBL	SBR
Lane Configurations						
Volume (vph)	252	518	590	30	81	117
Ideal Flow (vphpl)	1900	1900	1900	1900	1900	1900
Total Lost time (s)	5.0	5.0	5.0		5.0	
Lane Util. Factor	1.00	0.95	0.95		1.00	
Frt	1.00	1.00	0.99		0.92	
Flt Protected	0.95	1.00	1.00		0.98	
Satd. Flow (prot)	1770	3539	3513		1680	
Flt Permitted	0.31	1.00	1.00		0.98	
Satd. Flow (perm)	586	3539	3513		1680	
Peak-hour factor, PHF	0.94	0.94	0.94	0.94	0.94	0.94
Adj. Flow (vph)	268	551	628	32	86	124
RTOR Reduction (vph)	0	0	3	0	16	0
Lane Group Flow (vph)	268	551	657	0	194	0
Turn Type	Perm	NA	NA		NA	
Protected Phases		4	8		6	
Permitted Phases	4					
Actuated Green, G (s)	48.0	48.0	48.0		54.0	
Effective Green, g (s)	48.0	48.0	48.0		54.0	
Actuated g/C Ratio	0.43	0.43	0.43		0.48	
Clearance Time (s)	5.0	5.0	5.0		5.0	
Vehicle Extension (s)	3.0	3.0	3.0		3.0	
Lane Grp Cap (vph)	251	1517	1506		810	
v/s Ratio Prot		0.16	0.19		c0.12	
v/s Ratio Perm	c0.46					
v/c Ratio	1.07	0.36	0.44		0.24	
Uniform Delay, d1	32.0	21.7	22.5		17.0	
Progression Factor	1.00	1.00	1.00		1.00	
Incremental Delay, d2	75.9	0.1	0.2		0.7	
Delay (s)	107.9	21.8	22.7		17.7	
Level of Service	F	C	C		B	
Approach Delay (s)		50.0	22.7		17.7	
Approach LOS		D	C		B	

Intersection Summary			
HCM Average Control Delay	35.3	HCM Level of Service	D
HCM Volume to Capacity ratio	0.63		
Actuated Cycle Length (s)	112.0	Sum of lost time (s)	10.0
Intersection Capacity Utilization	55.4%	ICU Level of Service	B
Analysis Period (min)	15		
c Critical Lane Group			

Lane Group	EBL	EBT	EBR	WBL	WBT	WBR	NBL	NBT	NBR	SBL	SBT	SBR
Lane Group Flow (vph)	514	498	123	424	524	85	144	2083	245	290	2790	803
v/c Ratio	0.90	0.92	0.39	1.08	0.77	0.18	1.07	0.92	0.23	1.01	1.03	0.39
Control Delay	81.3	88.9	48.4	111.3	71.1	37.2	132.8	46.5	7.8	100.9	59.7	7.6
Queue Delay	0.0	0.0	0.0	0.0	0.0	0.0	0.0	0.0	0.0	0.0	0.0	0.0
Total Delay	81.3	88.9	48.4	111.3	71.1	37.2	132.8	46.5	7.8	100.9	59.7	7.6
Queue Length 50th (ft)	257	179	88	~412	184	57	~103	691	65	~239	~1065	139
Queue Length 95th (ft)	#356	#251	155	#632	230	103	#253	763	104	#438	#1142	174
Internal Link Dist (ft)		484			394			469			768	
Turn Bay Length (ft)	200		200	286		200	160		200	130		200
Base Capacity (vph)	572	542	313	392	682	480	134	2271	1083	287	2712	2058
Starvation Cap Reductn	0	0	0	0	0	0	0	0	0	0	0	0
Spillback Cap Reductn	0	0	0	0	0	0	0	0	0	0	0	0
Storage Cap Reductn	0	0	0	0	0	0	0	0	0	0	0	0
Reduced v/c Ratio	0.90	0.92	0.39	1.08	0.77	0.18	1.07	0.92	0.23	1.01	1.03	0.39

Intersection Summary

~ Volume exceeds capacity, queue is theoretically infinite.
Queue shown is maximum after two cycles.

95th percentile volume exceeds capacity, queue may be longer.
Queue shown is maximum after two cycles.

Movement	EBL	EBT	EBR	WBL	WBT	WBR	NBL	NBT	NBR	SBL	SBT	SBR
Lane Configurations												
Volume (vph)	483	468	116	399	493	80	135	1958	230	273	2623	755
Ideal Flow (vphpl)	1900	1900	1900	1900	1900	1900	1900	1900	1900	1900	1900	1900
Total Lost time (s)	5.0	5.0	3.0	5.0	5.0	3.0	3.0	5.0	5.0	3.0	5.0	5.0
Lane Util. Factor	0.97	0.91	1.00	1.00	0.91	1.00	1.00	0.91	1.00	1.00	0.91	0.88
Frt	1.00	1.00	0.85	1.00	1.00	0.85	1.00	1.00	0.85	1.00	1.00	0.85
Flt Protected	0.95	1.00	1.00	0.95	1.00	1.00	0.95	1.00	1.00	0.95	1.00	1.00
Satd. Flow (prot)	3433	5085	1583	1770	5085	1583	1770	5085	1583	1770	5085	2787
Flt Permitted	0.95	1.00	1.00	0.20	1.00	1.00	0.06	1.00	1.00	0.06	1.00	1.00
Satd. Flow (perm)	3433	5085	1583	371	5085	1583	111	5085	1583	106	5085	2787
Peak-hour factor, PHF	0.94	0.94	0.94	0.94	0.94	0.94	0.94	0.94	0.94	0.94	0.94	0.94
Adj. Flow (vph)	514	498	123	424	524	85	144	2083	245	290	2790	803
RTOR Reduction (vph)	0	0	18	0	0	4	0	0	19	0	0	16
Lane Group Flow (vph)	514	498	105	424	524	81	144	2083	226	290	2790	787
Turn Type	Prot	NA	pm+ov	pm+pt	NA	pm+ov	pm+pt	NA	pm+ov	pm+pt	NA	pm+ov
Protected Phases	7	4	5	3	8	1	5	2	3	1	6	7
Permitted Phases			4	8		8	2		2	6		6
Actuated Green, G (s)	24.9	16.0	23.0	49.1	20.1	40.1	74.0	67.0	96.0	90.0	80.0	104.9
Effective Green, g (s)	24.9	16.0	23.0	49.1	20.1	40.1	74.0	67.0	96.0	90.0	80.0	104.9
Actuated g/C Ratio	0.17	0.11	0.15	0.33	0.13	0.27	0.49	0.45	0.64	0.60	0.53	0.70
Clearance Time (s)	5.0	5.0	3.0	5.0	5.0	3.0	3.0	5.0	5.0	3.0	5.0	5.0
Vehicle Extension (s)	3.0	3.0	3.0	3.0	3.0	3.0	3.0	3.0	3.0	3.0	3.0	3.0
Lane Grp Cap (vph)	570	542	243	392	681	423	132	2271	1066	285	2712	2042
v/s Ratio Prot	0.15	0.10	0.02	c0.21	0.10	0.03	c0.05	0.41	0.04	c0.14	0.55	0.06
v/s Ratio Perm			0.05	c0.15		0.03	c0.49		0.10	0.47		0.22
v/c Ratio	0.90	0.92	0.43	1.08	0.77	0.19	1.09	0.92	0.21	1.02	1.03	0.39
Uniform Delay, d1	61.4	66.4	57.6	45.5	62.7	42.4	40.8	38.9	11.2	51.8	35.0	9.3
Progression Factor	1.00	1.00	1.00	1.00	1.00	1.00	1.00	1.00	1.00	1.00	1.00	1.00
Incremental Delay, d2	17.5	20.6	1.2	69.1	5.2	0.2	104.8	7.3	0.1	57.9	25.2	0.1
Delay (s)	78.8	86.9	58.8	114.6	68.0	42.6	145.6	46.2	11.3	109.7	60.2	9.4
Level of Service	E	F	E	F	E	D	F	D	B	F	E	A
Approach Delay (s)		80.2			85.0			48.6			53.4	
Approach LOS		F			F			D			D	

Intersection Summary			
HCM Average Control Delay	59.4	HCM Level of Service	E
HCM Volume to Capacity ratio	1.08		
Actuated Cycle Length (s)	150.0	Sum of lost time (s)	16.0
Intersection Capacity Utilization	105.1%	ICU Level of Service	G
Analysis Period (min)	15		
c Critical Lane Group			

Movement	EBL	EBT	EBR	WBL	WBT	WBR	NBL	NBT	NBR	SBL	SBT	SBR
Lane Configurations												
Volume (vph)	483	468	116	399	493	80	135	1958	230	273	2623	755
Movement Number	7	4	14	3	8	18	5	2	12	1	6	16
Initial Queue, veh	0	0	0	0	0	0	0	0	0	0	0	0
Ped-Bike Adj. Factor (A_pbT)	1.00		1.00	1.00		1.00	1.00		1.00	1.00		1.00
Parking, Bus Adj. Factors	1.00	1.00	1.00	1.00	1.00	1.00	1.00	1.00	1.00	1.00	1.00	1.00
Adj. Sat. Flow Rate, veh/h/ln	1863	1863	1863	1863	1863	1863	1863	1863	1863	1863	1863	1863
Lanes	2	3	1	1	3	1	1	3	1	1	3	2
Lane Assignment												
Capacity, veh/h	558	542	243	400	702	430	132	2271	1013	297	2712	1938
Proportion Arriving On Green	0.16	0.11	0.11	0.19	0.14	0.14	0.05	0.45	0.45	0.13	0.53	0.53
Movement Delay, s/veh	82.1	87.1	60.0	106.8	66.5	42.3	145.4	46.2	12.1	98.6	60.2	9.9
Movement LOS	F	F	E	F	E	D	F	D	B	F	F	A
Approach Volume, veh/h		1135			1034			2471			3884	
Approach Delay, s/veh		81.9			81.1			48.6			52.7	
Approach LOS		F			F			D			D	

Timer:	1	2	3	4	5	6	7	8
Assigned Phase	1	2	3	4	5	6	7	8
Case No	1.1	3.0	1.1	3.0	1.1	3.0	2.0	3.0
Phase Duration (G+Y+Rc), s	23.00	72.00	34.00	21.00	10.00	85.00	29.30	25.70
Change Period (Y+Rc), s	3.00	5.00	5.00	5.00	3.00	5.00	5.00	5.00
Max. Allowable Headway (MAH), s	4.00	3.93	4.00	3.93	4.00	3.93	4.00	3.93
Maximum Green Setting (Gmax), s	20.00	67.00	29.00	16.00	7.00	80.00	25.00	20.00
Max. Queue Clearance Time (g_c+I1), s	21.34	59.58	31.00	16.54	9.00	82.00	24.06	16.87
Green Extension Time (g_e), s	0.00	7.37	0.00	0.00	0.00	0.00	0.24	1.64
Probability of Phase Call (p_c)	1.000	1.000	1.000	1.000	0.997	1.000	1.000	1.000
Probability of Max Out (p_x)	1.000	0.996	1.000	1.000	1.000	1.000	1.000	1.000

Left-Turn Movement Data				
Assigned Movement	1	3	5	7
Mvmt. Sat Flow, veh/h	1774.04	1774.04	1774.04	3441.64

Through Movement Data				
Assigned Movement	2	4	6	8
Mvmt. Sat Flow, veh/h	5085.29	5085.29	5085.29	5085.29

Right-Turn Movement Data				
Assigned Movement	12	14	16	18
Mvmt. Sat Flow, veh/h	1583.33	1583.33	2786.67	1583.33

Left Lane Group Data								
Assigned Movement	1	0	3	0	5	0	7	0
Lane Assignment	L (Pr/Pm)		L (Pr/Pm)		L (Pr/Pm)		L (Prot)	
Lanes in Group	1	0	1	0	1	0	2	0
Group Volume (v), veh/h	290.4	0.0	424.5	0.0	143.6	0.0	513.8	0.0
Group Sat. Flow (s), veh/h/ln	1774.0	0.0	1774.0	0.0	1774.0	0.0	1720.8	0.0
Queue Serve Time (g_s), s	19.3	0.0	29.0	0.0	7.0	0.0	22.1	0.0
Cycle Queue Clear Time (g_c), s	19.3	0.0	29.0	0.0	7.0	0.0	22.1	0.0

Perm LT Sat Flow Rate (s_l), veh/h/ln	197.6	0.0	896.2	0.0	97.7	0.0	0.0	0.0
Shared LT Sat Flow (s_sh), veh/h/ln	0.0	0.0	0.0	0.0	0.0	0.0	0.0	0.0
Perm LT Eff. Green (g_p), s	82.0	0.0	22.4	0.0	67.0	0.0	0.0	0.0
Perm LT Serve Time (g_u), s	9.4	0.0	1.5	0.0	2.0	0.0	0.0	0.0
Perm LT Que Serve Time (g_ps), s	9.4	0.0	1.5	0.0	2.0	0.0	0.0	0.0
Time to First Blk (g_f), s	0.0	0.0	0.0	0.0	0.0	0.0	0.0	0.0
Serve Time pre Blk (g_fs), s	0.0	0.0	0.0	0.0	0.0	0.0	0.0	0.0
Proportion LT Inside Lane (P_L)	1.000	0.000	1.000	0.000	1.000	0.000	1.000	0.000
Lane Group Capacity (c), veh/h	296.9	0.0	399.7	0.0	132.1	0.0	557.5	0.0
Volume-to-Capacity Ratio (X)	0.978	0.000	1.062	0.000	1.087	0.000	0.922	0.000
Available Capacity (c_a), veh/h	296.9	0.0	399.7	0.0	132.1	0.0	573.6	0.0
Upstream Filter Factor (I)	1.000	0.000	1.000	0.000	1.000	0.000	1.000	0.000
Uniform Delay (d1), s/veh	52.5	0.0	44.4	0.0	41.8	0.0	61.9	0.0
Incremental Delay (d2), s/veh	46.1	0.0	62.4	0.0	103.6	0.0	20.2	0.0
Initial Queue Delay (d3), s/veh	0.0	0.0	0.0	0.0	0.0	0.0	0.0	0.0
Control Delay (d), s/veh	98.6	0.0	106.8	0.0	145.4	0.0	82.1	0.0
First-Term Queue (Q1), veh/ln	8.5	0.0	12.8	0.0	3.0	0.0	9.7	0.0
Second-Term Queue (Q2), veh/ln	3.8	0.0	6.9	0.0	3.8	0.0	1.6	0.0
Third-Term Queue (Q3), veh/ln	0.0	0.0	0.0	0.0	0.0	0.0	0.0	0.0
Percentile bk-of-que factor (f_B%)	1.000	0.000	1.000	0.000	1.000	0.000	1.000	0.000
Percentile Back of Queue (Q%), veh/ln	12.3	0.0	19.7	0.0	6.8	0.0	11.2	0.0
Percentile Storage Ratio (RQ%)	2.41	0.00	1.75	0.00	1.09	0.00	1.43	0.00
Initial Queue (Qb), veh	0.0	0.0	0.0	0.0	0.0	0.0	0.0	0.0
Final (Residual) Queue (Qe), veh	0.0	0.0	6.2	0.0	2.9	0.0	0.0	0.0
Saturated Delay (ds), s/veh	0.0	0.0	0.0	0.0	0.0	0.0	0.0	0.0
Saturated Queue (Qs), veh	0.0	0.0	0.0	0.0	0.0	0.0	0.0	0.0
Saturated Capacity (cs), veh/h	0.0	0.0	0.0	0.0	0.0	0.0	0.0	0.0
Initial Queue Clear Time (tc), h	0.0	0.0	0.3	0.0	0.3	0.0	0.0	0.0

Middle Lane Group Data								
Assigned Movement	0	2	0	4	0	6	0	8
Lane Assignment		T		T		T		T
Lanes in Group	0	3	0	3	0	3	0	3
Group Volume (v), veh/h	0.0	2083.0	0.0	497.9	0.0	2790.4	0.0	524.5
Group Sat. Flow (s), veh/h/ln	0.0	1695.1	0.0	1695.1	0.0	1695.1	0.0	1695.1
Queue Serve Time (g_s), s	0.0	57.6	0.0	14.5	0.0	80.0	0.0	14.9
Cycle Queue Clear Time (g_c), s	0.0	57.6	0.0	14.5	0.0	80.0	0.0	14.9
Lane Group Capacity (c), veh/h	0.0	2271.4	0.0	542.4	0.0	2712.2	0.0	701.8
Volume-to-Capacity Ratio (X)	0.000	0.917	0.000	0.918	0.000	1.029	0.000	0.747
Available Capacity (c_a), veh/h	0.0	2271.4	0.0	542.4	0.0	2712.2	0.0	701.8
Upstream Filter Factor (I)	0.000	1.000	0.000	1.000	0.000	1.000	0.000	1.000
Uniform Delay (d1), s/veh	0.0	38.9	0.0	66.3	0.0	35.0	0.0	62.1
Incremental Delay (d2), s/veh	0.0	7.3	0.0	20.7	0.0	25.2	0.0	4.4
Initial Queue Delay (d3), s/veh	0.0	0.0	0.0	0.0	0.0	0.0	0.0	0.0
Control Delay (d), s/veh	0.0	46.2	0.0	87.1	0.0	60.2	0.0	66.5
First-Term Queue (Q1), veh/ln	0.0	23.7	0.0	6.3	0.0	32.1	0.0	6.4
Second-Term Queue (Q2), veh/ln	0.0	1.5	0.0	1.0	0.0	6.3	0.0	0.3
Third-Term Queue (Q3), veh/ln	0.0	0.0	0.0	0.0	0.0	0.0	0.0	0.0
Percentile bk-of-que factor (f_B%)	0.000	1.000	0.000	1.000	0.000	1.000	0.000	1.000
Percentile Back of Queue (Q%), veh/ln	0.0	25.3	0.0	7.4	0.0	38.4	0.0	6.7
Percentile Storage Ratio (RQ%)	0.00	1.49	0.00	0.41	0.00	1.39	0.00	0.49

Initial Queue (Qb), veh	0.0	0.0	0.0	0.0	0.0	0.0	0.0	0.0
Final (Residual) Queue (Qe), veh	0.0	0.0	0.0	0.0	0.0	19.6	0.0	0.0
Saturated Delay (ds), s/veh	0.0	0.0	0.0	0.0	0.0	0.0	0.0	0.0
Saturated Queue (Qs), veh	0.0	0.0	0.0	0.0	0.0	0.0	0.0	0.0
Saturated Capacity (cs), veh/h	0.0	0.0	0.0	0.0	0.0	0.0	0.0	0.0
Initial Queue Clear Time (tc), h	0.0	0.0	0.0	0.0	0.0	0.3	0.0	0.0

Right Lane Group Data								
Assigned Movement	0	12	0	14	0	16	0	18
Lane Assignment		R		R		R		R
Lanes in Group	0	1	0	1	0	2	0	1
Group Volume (v), veh/h	0.0	244.7	0.0	123.4	0.0	803.2	0.0	85.1
Group Sat. Flow (s), veh/h/ln	0.0	1583.3	0.0	1583.3	0.0	1393.3	0.0	1583.3
Queue Serve Time (g_s), s	0.0	9.9	0.0	10.7	0.0	18.5	0.0	6.2
Cycle Queue Clear Time (g_c), s	0.0	9.9	0.0	10.7	0.0	18.5	0.0	6.2
Prot RT Sat Flow Rate (s_R), veh/h/ln	0.0	1583.3	0.0	1583.3	0.0	1393.3	0.0	1583.3
Prot RT Eff. Green (g_R), s	0.0	29.0	0.0	7.0	0.0	24.3	0.0	20.0
Proportion RT Outside Lane (P_R)	0.000	1.000	0.000	1.000	0.000	1.000	0.000	1.000
Lane Group Capacity (c), veh/h	0.0	1013.3	0.0	242.8	0.0	1937.7	0.0	429.6
Volume-to-Capacity Ratio (X)	0.000	0.241	0.000	0.508	0.000	0.415	0.000	0.198
Available Capacity (c_a), veh/h	0.0	1013.3	0.0	242.8	0.0	1937.7	0.0	429.6
Upstream Filter Factor (I)	0.000	1.000	0.000	1.000	0.000	1.000	0.000	1.000
Uniform Delay (d1), s/veh	0.0	11.5	0.0	58.3	0.0	9.8	0.0	42.1
Incremental Delay (d2), s/veh	0.0	0.6	0.0	1.7	0.0	0.1	0.0	0.2
Initial Queue Delay (d3), s/veh	0.0	0.0	0.0	0.0	0.0	0.0	0.0	0.0
Control Delay (d), s/veh	0.0	12.1	0.0	60.0	0.0	9.9	0.0	42.3
First-Term Queue (Q1), veh/ln	0.0	3.5	0.0	4.3	0.0	5.5	0.0	2.5
Second-Term Queue (Q2), veh/ln	0.0	0.2	0.0	0.1	0.0	0.0	0.0	0.0
Third-Term Queue (Q3), veh/ln	0.0	0.0	0.0	0.0	0.0	0.0	0.0	0.0
Percentile bk-of-que factor (f_B%)	0.000	1.000	0.000	1.000	0.000	1.000	0.000	1.000
Percentile Back of Queue (Q%), veh/ln	0.0	3.7	0.0	4.5	0.0	5.6	0.0	2.5
Percentile Storage Ratio (RQ%)	0.00	0.47	0.00	0.57	0.00	0.71	0.00	0.32
Initial Queue (Qb), veh	0.0	0.0	0.0	0.0	0.0	0.0	0.0	0.0
Final (Residual) Queue (Qe), veh	0.0	0.0	0.0	0.0	0.0	0.0	0.0	0.0
Saturated Delay (ds), s/veh	0.0	0.0	0.0	0.0	0.0	0.0	0.0	0.0
Saturated Queue (Qs), veh	0.0	0.0	0.0	0.0	0.0	0.0	0.0	0.0
Saturated Capacity (cs), veh/h	0.0	0.0	0.0	0.0	0.0	0.0	0.0	0.0
Initial Queue Clear Time (tc), h	0.0	0.0	0.0	0.0	0.0	0.0	0.0	0.0

Intersection Summary	
HCM Average Control Delay	58.8
HCM Level of Service	E

Lane Group	EBT	WBT	NET
Lane Group Flow (vph)	53	70	2941
v/c Ratio	0.71	0.54	0.66
Control Delay	139.2	94.5	4.5
Queue Delay	0.0	0.0	0.0
Total Delay	139.2	94.5	4.5
Queue Length 50th (ft)	74	81	331
Queue Length 95th (ft)	133	144	470
Internal Link Dist (ft)	48	206	515
Turn Bay Length (ft)			
Base Capacity (vph)	124	206	4478
Starvation Cap Reductn	0	0	0
Spillback Cap Reductn	0	0	0
Storage Cap Reductn	0	0	0
Reduced v/c Ratio	0.43	0.34	0.66

Intersection Summary

Movement	EBL	EBT	EBR	WBL	WBT	WBR	NEL	NET	NER	SWL	SWT	SWR
Lane Configurations												
Volume (vph)	39	11	0	0	29	37	68	2681	45	0	0	0
Ideal Flow (vphpl)	1900	1900	1900	1900	1900	1900	1900	1900	1900	1900	1900	1900
Total Lost time (s)		5.0			5.0			5.0				
Lane Util. Factor		1.00			1.00			0.91				
Frt		1.00			0.92			1.00				
Flt Protected		0.96			1.00			1.00				
Satd. Flow (prot)		1793			1723			5067				
Flt Permitted		0.58			1.00			1.00				
Satd. Flow (perm)		1084			1723			5067				
Peak-hour factor, PHF	0.95	0.95	0.95	0.95	0.95	0.95	0.95	0.95	0.95	0.95	0.95	0.95
Adj. Flow (vph)	41	12	0	0	31	39	72	2822	47	0	0	0
RTOR Reduction (vph)	0	0	0	0	10	0	0	1	0	0	0	0
Lane Group Flow (vph)	0	53	0	0	60	0	0	2940	0	0	0	0
Turn Type	Perm	NA			NA		Split	NA				
Protected Phases		4			8		2	2				
Permitted Phases	4							2				
Actuated Green, G (s)		14.6			14.6			186.1				
Effective Green, g (s)		14.6			14.6			186.1				
Actuated g/C Ratio		0.07			0.07			0.88				
Clearance Time (s)		5.0			5.0			5.0				
Vehicle Extension (s)		3.0			3.0			3.0				
Lane Grp Cap (vph)		75			119			4475				
v/s Ratio Prot					0.03			c0.58				
v/s Ratio Perm		c0.05										
v/c Ratio		0.71			0.50			0.66				
Uniform Delay, d1		96.0			94.5			3.4				
Progression Factor		1.00			1.00			1.00				
Incremental Delay, d2		26.1			3.3			0.8				
Delay (s)		122.0			97.9			4.2				
Level of Service		F			F			A				
Approach Delay (s)		122.0			97.9			4.2			0.0	
Approach LOS		F			F			A			A	

Intersection Summary			
HCM Average Control Delay	8.4	HCM Level of Service	A
HCM Volume to Capacity ratio	0.66		
Actuated Cycle Length (s)	210.7	Sum of lost time (s)	10.0
Intersection Capacity Utilization	71.9%	ICU Level of Service	C
Analysis Period (min)	15		
c Critical Lane Group			

Movement	EBL	EBT	EBR	WBL	WBT	WBR	NEL	NET	NER	SWL	SWT	SWR
Lane Configurations												
Volume (vph)	39	11	0	0	29	37	68	2681	45	0	0	0
Movement Number	7	4	14	3	8	18	5	2	12	1	6	16
Initial Queue, veh	0	0	0	0	0	0	0	0	0	0	0	0
Ped-Bike Adj. Factor (A_pbT)	1.00		1.00	1.00		1.00	1.00		1.00	1.00		1.00
Parking, Bus Adj. Factors	1.00	1.00	1.00	1.00	1.00	1.00	1.00	1.00	1.00	1.00	1.00	1.00
Adj. Sat. Flow Rate, veh/h/ln	1863	1863	1900	1900	1863	1863	1863	1863	1863	1900	1900	1900
Lanes	0	1	0	0	1	0	0	3	0	0	0	0
Lane Assignment												
Capacity, veh/h	74	17	0	0	59	76	111	4668	80	0	0	0
Proportion Arriving On Green	0.08	0.08	0.00	0.00	0.08	0.08	0.87	0.87	0.87	0.00	0.00	0.00
Movement Delay, s/veh	103.0	0.0	0.0	0.0	0.0	97.0	5.9	5.0	5.1	0.0	0.0	0.0
Movement LOS	F					F	A	A	A			
Approach Volume, veh/h		53			69			2941			0	
Approach Delay, s/veh		103.0			97.0			5.4			0.0	
Approach LOS		F			F			A				

Timer:	1	2	3	4	5	6	7	8
Assigned Phase		2		4				8
Case No		12.0		8.0				8.0
Phase Duration (G+Y+Rc), s		191.00		22.01				22.01
Change Period (Y+Rc), s		5.00		5.00				5.00
Max. Allowable Headway (MAH), s		3.91		4.08				4.08
Maximum Green Setting (Gmax), s		186.00		24.00				24.00
Max. Queue Clearance Time (g_c+I1), s		36.63		16.85				10.38
Green Extension Time (g_e), s		31.97		0.17				0.27
Probability of Phase Call (p_c)		1.000		0.999				0.999
Probability of Max Out (p_x)		0.059		0.063				0.000

Left-Turn Movement Data				
Assigned Movement		5		7
Mvmt. Sat Flow, veh/h		127.41		594.58

Through Movement Data				
Assigned Movement		2		4				8
Mvmt. Sat Flow, veh/h		5346.03		167.70				744.80

Right-Turn Movement Data				
Assigned Movement		12		14				18
Mvmt. Sat Flow, veh/h		92.16		0.00				950.26

Left Lane Group Data								
Assigned Movement	0	5	0	7	0	0	0	0
Lane Assignment		L+T		L+T				
Lanes in Group	0	1	0	1	0	0	0	0
Group Volume (v), veh/h	0.0	1042.9	0.0	52.6	0.0	0.0	0.0	0.0
Group Sat. Flow (s), veh/h/ln	0.0	1856.4	0.0	762.3	0.0	0.0	0.0	0.0
Queue Serve Time (g_s), s	0.0	34.6	0.0	6.5	0.0	0.0	0.0	0.0
Cycle Queue Clear Time (g_c), s	0.0	34.6	0.0	14.8	0.0	0.0	0.0	0.0

Perm LT Sat Flow Rate (s_l), veh/h/ln	0.0	0.0	0.0	765.8	0.0	0.0	0.0	0.0
Shared LT Sat Flow (s_sh), veh/h/ln	0.0	0.0	0.0	570.2	0.0	0.0	0.0	0.0
Perm LT Eff. Green (g_p), s	0.0	0.0	0.0	17.0	0.0	0.0	0.0	0.0
Perm LT Serve Time (g_u), s	0.0	0.0	0.0	8.6	0.0	0.0	0.0	0.0
Perm LT Que Serve Time (g_ps), s	0.0	0.0	0.0	6.5	0.0	0.0	0.0	0.0
Time to First Blk (g_f), s	0.0	0.0	0.0	0.6	0.0	0.0	0.0	17.0
Serve Time pre Blk (g_fs), s	0.0	0.0	0.0	0.6	0.0	0.0	0.0	0.0
Proportion LT Inside Lane (P_L)	0.000	0.069	0.000	0.780	0.000	0.000	0.000	0.000
Lane Group Capacity (c), veh/h	0.0	1621.0	0.0	90.9	0.0	0.0	0.0	0.0
Volume-to-Capacity Ratio (X)	0.000	0.643	0.000	0.579	0.000	0.000	0.000	0.000
Available Capacity (c_a), veh/h	0.0	1621.0	0.0	119.3	0.0	0.0	0.0	0.0
Upstream Filter Factor (I)	0.000	1.000	0.000	1.000	0.000	0.000	0.000	0.000
Uniform Delay (d1), s/veh	0.0	3.9	0.0	97.3	0.0	0.0	0.0	0.0
Incremental Delay (d2), s/veh	0.0	2.0	0.0	5.7	0.0	0.0	0.0	0.0
Initial Queue Delay (d3), s/veh	0.0	0.0	0.0	0.0	0.0	0.0	0.0	0.0
Control Delay (d), s/veh	0.0	5.9	0.0	103.0	0.0	0.0	0.0	0.0
First-Term Queue (Q1), veh/ln	0.0	11.0	0.0	3.0	0.0	0.0	0.0	0.0
Second-Term Queue (Q2), veh/ln	0.0	0.9	0.0	0.1	0.0	0.0	0.0	0.0
Third-Term Queue (Q3), veh/ln	0.0	0.0	0.0	0.0	0.0	0.0	0.0	0.0
Percentile bk-of-que factor (f_B%)	0.000	1.000	0.000	1.000	0.000	0.000	0.000	0.000
Percentile Back of Queue (Q%), veh/ln	0.0	11.9	0.0	3.2	0.0	0.0	0.0	0.0
Percentile Storage Ratio (RQ%)	0.00	0.55	0.00	0.75	0.00	0.00	0.00	0.00
Initial Queue (Qb), veh	0.0	0.0	0.0	0.0	0.0	0.0	0.0	0.0
Final (Residual) Queue (Qe), veh	0.0	0.0	0.0	0.0	0.0	0.0	0.0	0.0
Saturated Delay (ds), s/veh	0.0	0.0	0.0	0.0	0.0	0.0	0.0	0.0
Saturated Queue (Qs), veh	0.0	0.0	0.0	0.0	0.0	0.0	0.0	0.0
Saturated Capacity (cs), veh/h	0.0	0.0	0.0	0.0	0.0	0.0	0.0	0.0
Initial Queue Clear Time (tc), h	0.0	0.0	0.0	0.0	0.0	0.0	0.0	0.0
Middle Lane Group Data								
Assigned Movement	0	2	0	4	0	0	0	8
Lane Assignment		T						
Lanes in Group	0	1	0	0	0	0	0	0
Group Volume (v), veh/h	0.0	949.1	0.0	0.0	0.0	0.0	0.0	0.0
Group Sat. Flow (s), veh/h/ln	0.0	1862.7	0.0	0.0	0.0	0.0	0.0	0.0
Queue Serve Time (g_s), s	0.0	28.1	0.0	0.0	0.0	0.0	0.0	0.0
Cycle Queue Clear Time (g_c), s	0.0	28.1	0.0	0.0	0.0	0.0	0.0	0.0
Lane Group Capacity (c), veh/h	0.0	1626.6	0.0	0.0	0.0	0.0	0.0	0.0
Volume-to-Capacity Ratio (X)	0.000	0.583	0.000	0.000	0.000	0.000	0.000	0.000
Available Capacity (c_a), veh/h	0.0	1626.6	0.0	0.0	0.0	0.0	0.0	0.0
Upstream Filter Factor (I)	0.000	1.000	0.000	0.000	0.000	0.000	0.000	0.000
Uniform Delay (d1), s/veh	0.0	3.5	0.0	0.0	0.0	0.0	0.0	0.0
Incremental Delay (d2), s/veh	0.0	1.5	0.0	0.0	0.0	0.0	0.0	0.0
Initial Queue Delay (d3), s/veh	0.0	0.0	0.0	0.0	0.0	0.0	0.0	0.0
Control Delay (d), s/veh	0.0	5.0	0.0	0.0	0.0	0.0	0.0	0.0
First-Term Queue (Q1), veh/ln	0.0	8.9	0.0	0.0	0.0	0.0	0.0	0.0
Second-Term Queue (Q2), veh/ln	0.0	0.7	0.0	0.0	0.0	0.0	0.0	0.0
Third-Term Queue (Q3), veh/ln	0.0	0.0	0.0	0.0	0.0	0.0	0.0	0.0
Percentile bk-of-que factor (f_B%)	0.000	1.000	0.000	1.000	0.000	0.000	0.000	1.000
Percentile Back of Queue (Q%), veh/ln	0.0	9.6	0.0	0.0	0.0	0.0	0.0	0.0
Percentile Storage Ratio (RQ%)	0.00	0.45	0.00	0.00	0.00	0.00	0.00	0.00

Initial Queue (Qb), veh	0.0	0.0	0.0	0.0	0.0	0.0	0.0	0.0
Final (Residual) Queue (Qe), veh	0.0	0.0	0.0	0.0	0.0	0.0	0.0	0.0
Saturated Delay (ds), s/veh	0.0	0.0	0.0	0.0	0.0	0.0	0.0	0.0
Saturated Queue (Qs), veh	0.0	0.0	0.0	0.0	0.0	0.0	0.0	0.0
Saturated Capacity (cs), veh/h	0.0	0.0	0.0	0.0	0.0	0.0	0.0	0.0
Initial Queue Clear Time (tc), h	0.0	0.0	0.0	0.0	0.0	0.0	0.0	0.0
Right Lane Group Data								
Assigned Movement	0	12	0	14	0	0	0	18
Lane Assignment		T+R						T+R
Lanes in Group	0	1	0	0	0	0	0	1
Group Volume (v), veh/h	0.0	949.1	0.0	0.0	0.0	0.0	0.0	69.5
Group Sat. Flow (s), veh/h/ln	0.0	1846.5	0.0	0.0	0.0	0.0	0.0	1695.1
Queue Serve Time (g_s), s	0.0	28.6	0.0	0.0	0.0	0.0	0.0	8.4
Cycle Queue Clear Time (g_c), s	0.0	28.6	0.0	0.0	0.0	0.0	0.0	8.4
Prot RT Sat Flow Rate (s_R), veh/h/ln	0.0	0.0	0.0	0.0	0.0	0.0	0.0	0.0
Prot RT Eff. Green (g_R), s	0.0	0.0	0.0	0.0	0.0	0.0	0.0	0.0
Proportion RT Outside Lane (P_R)	0.000	0.050	0.000	0.000	0.000	0.000	0.000	0.561
Lane Group Capacity (c), veh/h	0.0	1612.4	0.0	0.0	0.0	0.0	0.0	135.3
Volume-to-Capacity Ratio (X)	0.000	0.589	0.000	0.000	0.000	0.000	0.000	0.513
Available Capacity (c_a), veh/h	0.0	1612.4	0.0	0.0	0.0	0.0	0.0	191.0
Upstream Filter Factor (I)	0.000	1.000	0.000	0.000	0.000	0.000	0.000	1.000
Uniform Delay (d1), s/veh	0.0	3.5	0.0	0.0	0.0	0.0	0.0	94.0
Incremental Delay (d2), s/veh	0.0	1.6	0.0	0.0	0.0	0.0	0.0	3.0
Initial Queue Delay (d3), s/veh	0.0	0.0	0.0	0.0	0.0	0.0	0.0	0.0
Control Delay (d), s/veh	0.0	5.1	0.0	0.0	0.0	0.0	0.0	97.0
First-Term Queue (Q1), veh/ln	0.0	9.0	0.0	0.0	0.0	0.0	0.0	3.7
Second-Term Queue (Q2), veh/ln	0.0	0.7	0.0	0.0	0.0	0.0	0.0	0.1
Third-Term Queue (Q3), veh/ln	0.0	0.0	0.0	0.0	0.0	0.0	0.0	0.0
Percentile bk-of-que factor (f_B%)	0.000	1.000	0.000	1.000	0.000	0.000	0.000	1.000
Percentile Back of Queue (Q%), veh/ln	0.0	9.7	0.0	0.0	0.0	0.0	0.0	3.8
Percentile Storage Ratio (RQ%)	0.00	0.45	0.00	0.00	0.00	0.00	0.00	0.44
Initial Queue (Qb), veh	0.0	0.0	0.0	0.0	0.0	0.0	0.0	0.0
Final (Residual) Queue (Qe), veh	0.0	0.0	0.0	0.0	0.0	0.0	0.0	0.0
Saturated Delay (ds), s/veh	0.0	0.0	0.0	0.0	0.0	0.0	0.0	0.0
Saturated Queue (Qs), veh	0.0	0.0	0.0	0.0	0.0	0.0	0.0	0.0
Saturated Capacity (cs), veh/h	0.0	0.0	0.0	0.0	0.0	0.0	0.0	0.0
Initial Queue Clear Time (tc), h	0.0	0.0	0.0	0.0	0.0	0.0	0.0	0.0
Intersection Summary								
HCM Average Control Delay		9.1						
HCM Level of Service		A						

Lane Group	EBT	WBT	NET
Lane Group Flow (vph)	18	184	3273
v/c Ratio	0.08	0.73	0.83
Control Delay	40.5	61.8	11.2
Queue Delay	0.0	0.0	7.7
Total Delay	40.5	61.8	18.9
Queue Length 50th (ft)	11	123	471
Queue Length 95th (ft)	32	194	572
Internal Link Dist (ft)	164	208	477
Turn Bay Length (ft)			
Base Capacity (vph)	263	295	3925
Starvation Cap Reductn	0	0	648
Spillback Cap Reductn	0	0	0
Storage Cap Reductn	0	0	0
Reduced v/c Ratio	0.07	0.62	1.00

Intersection Summary

Movement	EBL	EBT	EBR	WBL	WBT	WBR	NEL	NET	NER	SWL	SWT	SWR
Lane Configurations												
Volume (vph)	6	10	0	0	137	27	7	2888	18	0	0	0
Ideal Flow (vphpl)	1900	1900	1900	1900	1900	1900	1900	1900	1900	1900	1900	1900
Total Lost time (s)		5.0			5.0			5.0				
Lane Util. Factor		1.00			1.00			0.91				
Frt		1.00			0.98			1.00				
Flt Protected		0.98			1.00			1.00				
Satd. Flow (prot)		1827			1822			5080				
Flt Permitted		0.87			1.00			1.00				
Satd. Flow (perm)		1630			1822			5080				
Peak-hour factor, PHF	0.89	0.89	0.89	0.89	0.89	0.89	0.89	0.89	0.89	0.89	0.89	0.89
Adj. Flow (vph)	7	11	0	0	154	30	8	3245	20	0	0	0
RTOR Reduction (vph)	0	0	0	0	2	0	0	0	0	0	0	0
Lane Group Flow (vph)	0	18	0	0	182	0	0	3273	0	0	0	0
Turn Type	Perm	NA			NA		Perm	NA				
Protected Phases		4			8			2				
Permitted Phases	4						2					
Actuated Green, G (s)		15.4			15.4			86.4				
Effective Green, g (s)		15.4			15.4			86.4				
Actuated g/C Ratio		0.14			0.14			0.77				
Clearance Time (s)		5.0			5.0			5.0				
Vehicle Extension (s)		3.0			3.0			3.0				
Lane Grp Cap (vph)		225			251			3926				
v/s Ratio Prot					c0.10							
v/s Ratio Perm		0.01						0.64				
v/c Ratio		0.08			0.73			0.83				
Uniform Delay, d1		42.0			46.2			8.1				
Progression Factor		1.00			1.00			1.00				
Incremental Delay, d2		0.2			10.0			2.2				
Delay (s)		42.2			56.2			10.3				
Level of Service		D			E			B				
Approach Delay (s)		42.2			56.2			10.3			0.0	
Approach LOS		D			E			B			A	

Intersection Summary			
HCM Average Control Delay	12.9	HCM Level of Service	B
HCM Volume to Capacity ratio	0.82		
Actuated Cycle Length (s)	111.8	Sum of lost time (s)	10.0
Intersection Capacity Utilization	73.5%	ICU Level of Service	D
Analysis Period (min)	15		
c Critical Lane Group			

Movement	EBL	EBT	EBR	WBL	WBT	WBR	NEL	NET	NER	SWL	SWT	SWR
Lane Configurations												
Volume (vph)	6	10	0	0	137	27	7	2888	18	0	0	0
Movement Number	7	4	14	3	8	18	5	2	12	1	6	16
Initial Queue, veh	0	0	0	0	0	0	0	0	0	0	0	0
Ped-Bike Adj. Factor (A_pbT)	1.00		1.00	1.00		1.00	1.00		1.00	1.00		1.00
Parking, Bus Adj. Factors	1.00	1.00	1.00	1.00	1.00	1.00	1.00	1.00	1.00	1.00	1.00	1.00
Adj. Sat. Flow Rate, veh/h/ln	1863	1863	1900	1900	1863	1863	1863	1863	1863	1900	1900	1900
Lanes	0	1	0	0	1	0	0	3	0	0	0	0
Lane Assignment												
Capacity, veh/h	81	112	0	0	183	36	35	3668	23	0	0	0
Proportion Arriving On Green	0.12	0.12	0.00	0.00	0.12	0.12	0.78	0.78	0.78	0.00	0.00	0.00
Movement Delay, s/veh	41.0	0.0	0.0	0.0	0.0	58.2	26.6	17.0	17.2	0.0	0.0	0.0
Movement LOS	D					E	C	B	B			
Approach Volume, veh/h		18			184			3273			0	
Approach Delay, s/veh		41.0			58.2			19.8			0.0	
Approach LOS		D			E			B				

Timer:	1	2	3	4	5	6	7	8
Assigned Phase		2		4				8
Case No		8.0		8.0				8.0
Phase Duration (G+Y+Rc), s		87.00		17.67				17.67
Change Period (Y+Rc), s		5.00		5.00				5.00
Max. Allowable Headway (MAH), s		3.91		3.97				3.97
Maximum Green Setting (Gmax), s		82.00		18.00				18.00
Max. Queue Clearance Time (g_c+I1), s		84.00		2.90				12.43
Green Extension Time (g_e), s		0.00		0.52				0.28
Probability of Phase Call (p_c)		1.000		0.997				0.997
Probability of Max Out (p_x)		1.000		0.000				0.310

Left-Turn Movement Data				
Assigned Movement		5		7
Mvmt. Sat Flow, veh/h		11.33		451.99

Through Movement Data				
Assigned Movement		2		4				8
Mvmt. Sat Flow, veh/h		4670.64		753.33				1512.14

Right-Turn Movement Data				
Assigned Movement		12		14				18
Mvmt. Sat Flow, veh/h		29.05		0.00				298.01

Left Lane Group Data								
Assigned Movement	0	5	0	7	0	0	0	0
Lane Assignment		L+T		L+T				
Lanes in Group	0	1	0	1	0	0	0	0
Group Volume (v), veh/h	0.0	920.2	0.0	18.0	0.0	0.0	0.0	0.0
Group Sat. Flow (s), veh/h/ln	0.0	1326.0	0.0	1205.3	0.0	0.0	0.0	0.0
Queue Serve Time (g_s), s	0.0	0.0	0.0	0.0	0.0	0.0	0.0	0.0
Cycle Queue Clear Time (g_c), s	0.0	82.0	0.0	0.9	0.0	0.0	0.0	0.0

Perm LT Sat Flow Rate (s_l), veh/h/ln	0.0	800.0	0.0	711.4	0.0	0.0	0.0	0.0
Shared LT Sat Flow (s_sh), veh/h/ln	0.0	0.0	0.0	937.5	0.0	0.0	0.0	0.0
Perm LT Eff. Green (g_p), s	0.0	82.0	0.0	12.7	0.0	0.0	0.0	0.0
Perm LT Serve Time (g_u), s	0.0	0.0	0.0	2.2	0.0	0.0	0.0	0.0
Perm LT Que Serve Time (g_ps), s	0.0	0.0	0.0	0.0	0.0	0.0	0.0	0.0
Time to First Blk (g_f), s	0.0	58.4	0.0	3.2	0.0	0.0	0.0	12.7
Serve Time pre Blk (g_fs), s	0.0	41.4	0.0	0.9	0.0	0.0	0.0	0.0
Proportion LT Inside Lane (P_L)	0.000	0.009	0.000	0.375	0.000	0.000	0.000	0.000
Lane Group Capacity (c), veh/h	0.0	1073.4	0.0	193.2	0.0	0.0	0.0	0.0
Volume-to-Capacity Ratio (X)	0.000	0.857	0.000	0.093	0.000	0.000	0.000	0.000
Available Capacity (c_a), veh/h	0.0	1073.4	0.0	251.5	0.0	0.0	0.0	0.0
Upstream Filter Factor (I)	0.000	1.000	0.000	1.000	0.000	0.000	0.000	0.000
Uniform Delay (d1), s/veh	0.0	17.8	0.0	40.8	0.0	0.0	0.0	0.0
Incremental Delay (d2), s/veh	0.0	8.9	0.0	0.2	0.0	0.0	0.0	0.0
Initial Queue Delay (d3), s/veh	0.0	0.0	0.0	0.0	0.0	0.0	0.0	0.0
Control Delay (d), s/veh	0.0	26.6	0.0	41.0	0.0	0.0	0.0	0.0
First-Term Queue (Q1), veh/ln	0.0	16.2	0.0	0.4	0.0	0.0	0.0	0.0
Second-Term Queue (Q2), veh/ln	0.0	2.6	0.0	0.0	0.0	0.0	0.0	0.0
Third-Term Queue (Q3), veh/ln	0.0	0.0	0.0	0.0	0.0	0.0	0.0	0.0
Percentile bk-of-que factor (f_B%)	0.000	1.000	0.000	1.000	0.000	0.000	0.000	0.000
Percentile Back of Queue (Q%), veh/ln	0.0	18.8	0.0	0.4	0.0	0.0	0.0	0.0
Percentile Storage Ratio (RQ%)	0.00	0.99	0.00	0.05	0.00	0.00	0.00	0.00
Initial Queue (Qb), veh	0.0	0.0	0.0	0.0	0.0	0.0	0.0	0.0
Final (Residual) Queue (Qe), veh	0.0	0.0	0.0	0.0	0.0	0.0	0.0	0.0
Saturated Delay (ds), s/veh	0.0	0.0	0.0	0.0	0.0	0.0	0.0	0.0
Saturated Queue (Qs), veh	0.0	0.0	0.0	0.0	0.0	0.0	0.0	0.0
Saturated Capacity (cs), veh/h	0.0	0.0	0.0	0.0	0.0	0.0	0.0	0.0
Initial Queue Clear Time (tc), h	0.0	0.0	0.0	0.0	0.0	0.0	0.0	0.0
Middle Lane Group Data								
Assigned Movement	0	2	0	4	0	0	0	8
Lane Assignment		T						
Lanes in Group	0	1	0	0	0	0	0	0
Group Volume (v), veh/h	0.0	1176.4	0.0	0.0	0.0	0.0	0.0	0.0
Group Sat. Flow (s), veh/h/ln	0.0	1695.1	0.0	0.0	0.0	0.0	0.0	0.0
Queue Serve Time (g_s), s	0.0	51.4	0.0	0.0	0.0	0.0	0.0	0.0
Cycle Queue Clear Time (g_c), s	0.0	51.4	0.0	0.0	0.0	0.0	0.0	0.0
Lane Group Capacity (c), veh/h	0.0	1327.9	0.0	0.0	0.0	0.0	0.0	0.0
Volume-to-Capacity Ratio (X)	0.000	0.886	0.000	0.000	0.000	0.000	0.000	0.000
Available Capacity (c_a), veh/h	0.0	1327.9	0.0	0.0	0.0	0.0	0.0	0.0
Upstream Filter Factor (I)	0.000	1.000	0.000	0.000	0.000	0.000	0.000	0.000
Uniform Delay (d1), s/veh	0.0	8.0	0.0	0.0	0.0	0.0	0.0	0.0
Incremental Delay (d2), s/veh	0.0	9.0	0.0	0.0	0.0	0.0	0.0	0.0
Initial Queue Delay (d3), s/veh	0.0	0.0	0.0	0.0	0.0	0.0	0.0	0.0
Control Delay (d), s/veh	0.0	17.0	0.0	0.0	0.0	0.0	0.0	0.0
First-Term Queue (Q1), veh/ln	0.0	13.1	0.0	0.0	0.0	0.0	0.0	0.0
Second-Term Queue (Q2), veh/ln	0.0	3.3	0.0	0.0	0.0	0.0	0.0	0.0
Third-Term Queue (Q3), veh/ln	0.0	0.0	0.0	0.0	0.0	0.0	0.0	0.0
Percentile bk-of-que factor (f_B%)	0.000	1.000	0.000	1.000	0.000	0.000	0.000	1.000
Percentile Back of Queue (Q%), veh/ln	0.0	16.4	0.0	0.0	0.0	0.0	0.0	0.0
Percentile Storage Ratio (RQ%)	0.00	0.87	0.00	0.00	0.00	0.00	0.00	0.00

Initial Queue (Qb), veh	0.0	0.0	0.0	0.0	0.0	0.0	0.0	0.0
Final (Residual) Queue (Qe), veh	0.0	0.0	0.0	0.0	0.0	0.0	0.0	0.0
Saturated Delay (ds), s/veh	0.0	0.0	0.0	0.0	0.0	0.0	0.0	0.0
Saturated Queue (Qs), veh	0.0	0.0	0.0	0.0	0.0	0.0	0.0	0.0
Saturated Capacity (cs), veh/h	0.0	0.0	0.0	0.0	0.0	0.0	0.0	0.0
Initial Queue Clear Time (tc), h	0.0	0.0	0.0	0.0	0.0	0.0	0.0	0.0

Right Lane Group Data								
Assigned Movement	0	12	0	14	0	0	0	18
Lane Assignment		T+R						T+R
Lanes in Group	0	1	0	0	0	0	0	1
Group Volume (v), veh/h	0.0	1176.4	0.0	0.0	0.0	0.0	0.0	184.3
Group Sat. Flow (s), veh/h/ln	0.0	1690.0	0.0	0.0	0.0	0.0	0.0	1810.2
Queue Serve Time (g_s), s	0.0	51.9	0.0	0.0	0.0	0.0	0.0	10.4
Cycle Queue Clear Time (g_c), s	0.0	51.9	0.0	0.0	0.0	0.0	0.0	10.4
Prot RT Sat Flow Rate (s_R), veh/h/ln	0.0	0.0	0.0	0.0	0.0	0.0	0.0	0.0
Prot RT Eff. Green (g_R), s	0.0	0.0	0.0	0.0	0.0	0.0	0.0	0.0
Proportion RT Outside Lane (P_R)	0.000	0.017	0.000	0.000	0.000	0.000	0.000	0.165
Lane Group Capacity (c), veh/h	0.0	1323.9	0.0	0.0	0.0	0.0	0.0	219.2
Volume-to-Capacity Ratio (X)	0.000	0.889	0.000	0.000	0.000	0.000	0.000	0.841
Available Capacity (c_a), veh/h	0.0	1323.9	0.0	0.0	0.0	0.0	0.0	311.3
Upstream Filter Factor (I)	0.000	1.000	0.000	0.000	0.000	0.000	0.000	1.000
Uniform Delay (d1), s/veh	0.0	8.1	0.0	0.0	0.0	0.0	0.0	45.0
Incremental Delay (d2), s/veh	0.0	9.2	0.0	0.0	0.0	0.0	0.0	13.2
Initial Queue Delay (d3), s/veh	0.0	0.0	0.0	0.0	0.0	0.0	0.0	0.0
Control Delay (d), s/veh	0.0	17.2	0.0	0.0	0.0	0.0	0.0	58.2
First-Term Queue (Q1), veh/ln	0.0	13.2	0.0	0.0	0.0	0.0	0.0	4.7
Second-Term Queue (Q2), veh/ln	0.0	3.4	0.0	0.0	0.0	0.0	0.0	0.8
Third-Term Queue (Q3), veh/ln	0.0	0.0	0.0	0.0	0.0	0.0	0.0	0.0
Percentile bk-of-que factor (f_B%)	0.000	1.000	0.000	1.000	0.000	0.000	0.000	1.000
Percentile Back of Queue (Q%), veh/ln	0.0	16.6	0.0	0.0	0.0	0.0	0.0	5.5
Percentile Storage Ratio (RQ%)	0.00	0.88	0.00	0.00	0.00	0.00	0.00	0.61
Initial Queue (Qb), veh	0.0	0.0	0.0	0.0	0.0	0.0	0.0	0.0
Final (Residual) Queue (Qe), veh	0.0	0.0	0.0	0.0	0.0	0.0	0.0	0.0
Saturated Delay (ds), s/veh	0.0	0.0	0.0	0.0	0.0	0.0	0.0	0.0
Saturated Queue (Qs), veh	0.0	0.0	0.0	0.0	0.0	0.0	0.0	0.0
Saturated Capacity (cs), veh/h	0.0	0.0	0.0	0.0	0.0	0.0	0.0	0.0
Initial Queue Clear Time (tc), h	0.0	0.0	0.0	0.0	0.0	0.0	0.0	0.0

Intersection Summary	
HCM Average Control Delay	21.9
HCM Level of Service	C

Movement	EBL	EBR	NBL	NBT	SBT	SBR
Lane Configurations						
Volume (veh/h)	40	22	18	287	182	12
Sign Control	Stop			Free	Free	
Grade	0%			0%	0%	
Peak Hour Factor	0.92	0.92	0.92	0.92	0.92	0.92
Hourly flow rate (vph)	43	24	20	312	198	13
Pedestrians						
Lane Width (ft)						
Walking Speed (ft/s)						
Percent Blockage						
Right turn flare (veh)						
Median type				None	None	
Median storage veh)						
Upstream signal (ft)				296		
pX, platoon unblocked						
vC, conflicting volume	555	204	211			
vC1, stage 1 conf vol						
vC2, stage 2 conf vol						
vCu, unblocked vol	555	204	211			
tC, single (s)	6.4	6.2	4.1			
tC, 2 stage (s)						
tF (s)	3.5	3.3	2.2			
p0 queue free %	91	97	99			
cM capacity (veh/h)	485	836	1360			

Direction, Lane #	EB 1	NB 1	SB 1
Volume Total	67	332	211
Volume Left	43	20	0
Volume Right	24	0	13
cSH	570	1360	1700
Volume to Capacity	0.12	0.01	0.12
Queue Length 95th (ft)	10	1	0
Control Delay (s)	12.2	0.6	0.0
Lane LOS	B	A	
Approach Delay (s)	12.2	0.6	0.0
Approach LOS	B		

Intersection Summary			
Average Delay	1.7		
Intersection Capacity Utilization	40.0%	ICU Level of Service	A
Analysis Period (min)	15		

Movement	EBL	EBR	NBL	NBT	SBT	SBR
Lane Configurations						
Volume (veh/h)	9	3	10	319	192	1
Sign Control	Stop			Free	Free	
Grade	0%			0%	0%	
Peak Hour Factor	0.92	0.92	0.92	0.92	0.92	0.92
Hourly flow rate (vph)	10	3	11	347	209	1
Pedestrians						
Lane Width (ft)						
Walking Speed (ft/s)						
Percent Blockage						
Right turn flare (veh)						
Median type				None	None	
Median storage veh)						
Upstream signal (ft)				581		
pX, platoon unblocked						
vC, conflicting volume	578	209	210			
vC1, stage 1 conf vol						
vC2, stage 2 conf vol						
vCu, unblocked vol	578	209	210			
tC, single (s)	6.4	6.2	4.1			
tC, 2 stage (s)						
tF (s)	3.5	3.3	2.2			
p0 queue free %	98	100	99			
cM capacity (veh/h)	474	831	1361			

Direction, Lane #	EB 1	NB 1	SB 1
Volume Total	13	358	210
Volume Left	10	11	0
Volume Right	3	0	1
cSH	531	1361	1700
Volume to Capacity	0.02	0.01	0.12
Queue Length 95th (ft)	2	1	0
Control Delay (s)	11.9	0.3	0.0
Lane LOS	B	A	
Approach Delay (s)	11.9	0.3	0.0
Approach LOS	B		

Intersection Summary			
Average Delay	0.5		
Intersection Capacity Utilization	34.9%	ICU Level of Service	A
Analysis Period (min)	15		

Movement	EBL	EBR	NBL	NBT	SBT	SBR
Lane Configurations						
Volume (veh/h)	15	17	31	295	167	1
Sign Control	Stop			Free	Free	
Grade	0%			0%	0%	
Peak Hour Factor	0.92	0.92	0.92	0.92	0.92	0.92
Hourly flow rate (vph)	16	18	34	321	182	1
Pedestrians						
Lane Width (ft)						
Walking Speed (ft/s)						
Percent Blockage						
Right turn flare (veh)						
Median type				None	None	
Median storage veh)						
Upstream signal (ft)				866		
pX, platoon unblocked						
vC, conflicting volume	570	182	183			
vC1, stage 1 conf vol						
vC2, stage 2 conf vol						
vCu, unblocked vol	570	182	183			
tC, single (s)	6.4	6.2	4.1			
tC, 2 stage (s)						
tF (s)	3.5	3.3	2.2			
p0 queue free %	97	98	98			
cM capacity (veh/h)	471	860	1392			

Direction, Lane #	EB 1	NB 1	SB 1
Volume Total	35	354	183
Volume Left	16	34	0
Volume Right	18	0	1
cSH	620	1392	1700
Volume to Capacity	0.06	0.02	0.11
Queue Length 95th (ft)	4	2	0
Control Delay (s)	11.1	0.9	0.0
Lane LOS	B	A	
Approach Delay (s)	11.1	0.9	0.0
Approach LOS	B		

Intersection Summary			
Average Delay	1.3		
Intersection Capacity Utilization	39.4%	ICU Level of Service	A
Analysis Period (min)	15		

Movement	EBL	EBR	NBL	NBT	SBT	SBR
Lane Configurations						
Volume (veh/h)	25	26	26	268	131	33
Sign Control	Stop			Free	Free	
Grade	0%			0%	0%	
Peak Hour Factor	0.92	0.92	0.92	0.92	0.92	0.92
Hourly flow rate (vph)	27	28	28	291	142	36
Pedestrians						
Lane Width (ft)						
Walking Speed (ft/s)						
Percent Blockage						
Right turn flare (veh)						
Median type				None	None	
Median storage veh)						
Upstream signal (ft)						
pX, platoon unblocked						
vC, conflicting volume	508	160	178			
vC1, stage 1 conf vol						
vC2, stage 2 conf vol						
vCu, unblocked vol	508	160	178			
tC, single (s)	6.4	6.2	4.1			
tC, 2 stage (s)						
tF (s)	3.5	3.3	2.2			
p0 queue free %	95	97	98			
cM capacity (veh/h)	514	885	1398			

Direction, Lane #	EB 1	NB 1	SB 1
Volume Total	55	320	178
Volume Left	27	28	0
Volume Right	28	0	36
cSH	654	1398	1700
Volume to Capacity	0.08	0.02	0.10
Queue Length 95th (ft)	7	2	0
Control Delay (s)	11.0	0.8	0.0
Lane LOS	B	A	
Approach Delay (s)	11.0	0.8	0.0
Approach LOS	B		

Intersection Summary			
Average Delay	1.6		
Intersection Capacity Utilization	37.8%	ICU Level of Service	A
Analysis Period (min)	15		

Movement	EBL	EBT	EBR	WBL	WBT	WBR	NBL	NBT	NBR	SBL	SBT	SBR
Lane Configurations												
Sign Control		Stop			Stop			Stop			Stop	
Volume (vph)	11	131	97	42	129	6	26	226	36	10	21	5
Peak Hour Factor	0.92	0.92	0.92	0.92	0.92	0.92	0.92	0.92	0.92	0.92	0.92	0.92
Hourly flow rate (vph)	12	142	105	46	140	7	28	246	39	11	23	5

Direction, Lane #	EB 1	WB 1	NB 1	SB 1
Volume Total (vph)	260	192	313	39
Volume Left (vph)	12	46	28	11
Volume Right (vph)	105	7	39	5
Hadj (s)	-0.20	0.06	-0.02	0.01
Departure Headway (s)	5.0	5.3	5.1	5.6
Degree Utilization, x	0.36	0.28	0.45	0.06
Capacity (veh/h)	675	629	655	557
Control Delay (s)	10.7	10.4	12.2	9.0
Approach Delay (s)	10.7	10.4	12.2	9.0
Approach LOS	B	B	B	A

Intersection Summary			
Delay	11.1		
HCM Level of Service	B		
Intersection Capacity Utilization	47.9%	ICU Level of Service	A
Analysis Period (min)	15		

HCM Unsignalized Intersection Capacity Analysis
1: SW 97th Ave. & SW 174th St.

2/18/2015

Movement	EBL	EBT	EBR	WBL	WBT	WBR	NBL	NBT	NBR	SBL	SBT	SBR
Lane Configurations												
Sign Control		Stop			Stop			Stop			Stop	
Volume (vph)	3	146	46	57	356	0	34	16	14	124	167	17
Peak Hour Factor	0.90	0.90	0.90	0.90	0.90	0.90	0.90	0.90	0.90	0.90	0.90	0.90
Hourly flow rate (vph)	3	162	51	63	396	0	38	18	16	138	186	19

Direction, Lane #	EB 1	WB 1	NB 1	SB 1
Volume Total (vph)	217	459	71	342
Volume Left (vph)	3	63	38	138
Volume Right (vph)	51	0	16	19
Hadj (s)	-0.10	0.06	0.01	0.08
Departure Headway (s)	6.0	5.7	6.8	6.1
Degree Utilization, x	0.36	0.73	0.13	0.58
Capacity (veh/h)	545	608	443	551
Control Delay (s)	12.4	22.7	10.8	17.3
Approach Delay (s)	12.4	22.7	10.8	17.3
Approach LOS	B	C	B	C

Intersection Summary			
Delay	18.2		
HCM Level of Service	C		
Intersection Capacity Utilization	61.5%	ICU Level of Service	B
Analysis Period (min)	15		

Lane Group	EBL	EBR	NBL	NBT	NBR	SBT	NET
Lane Group Flow (vph)	16	172	8	18	370	240	3070
v/c Ratio	0.10	0.74	0.11	0.05	0.23	0.65	0.82
Control Delay	91.5	115.5	93.1	88.4	0.3	101.9	21.8
Queue Delay	0.0	0.0	0.0	0.0	0.0	0.0	1.3
Total Delay	91.5	115.5	93.1	88.4	0.3	101.9	23.0
Queue Length 50th (ft)	21	138	11	12	0	176	1013
Queue Length 95th (ft)	53	192	33	28	0	236	1109
Internal Link Dist (ft)	257			1041		665	1300
Turn Bay Length (ft)					200		
Base Capacity (vph)	188	282	70	377	1583	370	3739
Starvation Cap Reductn	0	0	0	0	0	0	424
Spillback Cap Reductn	0	0	0	0	0	0	0
Storage Cap Reductn	0	0	0	0	0	0	0
Reduced v/c Ratio	0.09	0.61	0.11	0.05	0.23	0.65	0.93

Intersection Summary

Movement	EBL	EBR	NBL	NBT	NBR	SBT	SBR	NEL2	NEL	NET	NER
Lane Configurations											
Volume (vph)	15	165	8	17	355	204	27	5	22	2873	47
Ideal Flow (vphpl)	1900	1900	1900	1900	1900	1900	1900	1900	1900	1900	1900
Total Lost time (s)	5.0	5.0	5.0	5.0	4.0	5.0				5.0	
Lane Util. Factor	1.00	0.88	1.00	0.95	1.00	0.95				0.91	
Frt	1.00	0.85	1.00	1.00	0.85	0.98				1.00	
Flt Protected	0.95	1.00	0.95	1.00	1.00	1.00				1.00	
Satd. Flow (prot)	1770	2647	1770	3539	1583	3477				5071	
Flt Permitted	0.95	1.00	0.35	1.00	1.00	1.00				1.00	
Satd. Flow (perm)	1770	2647	656	3539	1583	3477				5071	
Peak-hour factor, PHF	0.96	0.96	0.96	0.96	0.96	0.96	0.96	0.96	0.96	0.96	0.96
Adj. Flow (vph)	16	172	8	18	370	212	28	5	23	2993	49
RTOR Reduction (vph)	0	0	0	0	0	0	0	0	0	1	0
Lane Group Flow (vph)	16	172	8	18	370	240	0	0	0	3069	0
Parking (#/hr)		0									
Turn Type	NA	Perm	Perm	NA	Free	NA		Perm	Perm	NA	
Protected Phases	3			4		8				6	
Permitted Phases		3	4		Free			6	6		
Actuated Green, G (s)	18.9	18.9	23.0	23.0	215.9	23.0				159.0	
Effective Green, g (s)	18.9	18.9	23.0	23.0	215.9	23.0				159.0	
Actuated g/C Ratio	0.09	0.09	0.11	0.11	1.00	0.11				0.74	
Clearance Time (s)	5.0	5.0	5.0	5.0		5.0				5.0	
Vehicle Extension (s)	3.0	3.0	3.0	3.0		3.0				3.0	
Lane Grp Cap (vph)	155	232	70	377	1583	370				3735	
v/s Ratio Prot	0.01			0.01		c0.07					
v/s Ratio Perm		c0.06	0.01		0.23					0.61	
v/c Ratio	0.10	0.74	0.11	0.05	0.23	0.65				0.82	
Uniform Delay, d1	90.7	96.1	87.2	86.6	0.0	92.6				19.0	
Progression Factor	1.00	1.00	1.00	1.00	1.00	1.00				1.00	
Incremental Delay, d2	0.3	12.0	3.3	0.2	0.3	8.5				2.2	
Delay (s)	91.0	108.1	90.5	86.9	0.3	101.1				21.2	
Level of Service	F	F	F	F	A	F				C	
Approach Delay (s)	106.7			6.1		101.1				21.2	
Approach LOS	F			A		F				C	

Intersection Summary			
HCM Average Control Delay	28.7	HCM Level of Service	C
HCM Volume to Capacity ratio	0.79		
Actuated Cycle Length (s)	215.9	Sum of lost time (s)	15.0
Intersection Capacity Utilization	82.1%	ICU Level of Service	E
Analysis Period (min)	15		

c Critical Lane Group

Movement	EBL	EBR	NBL	NBT	SBT	SBR
Lane Configurations						
Volume (veh/h)	47	95	25	313	291	82
Sign Control	Stop			Free	Free	
Grade	0%			0%	0%	
Peak Hour Factor	0.92	0.92	0.92	0.92	0.92	0.92
Hourly flow rate (vph)	51	103	27	340	316	89
Pedestrians						
Lane Width (ft)						
Walking Speed (ft/s)						
Percent Blockage						
Right turn flare (veh)						
Median type				None	None	
Median storage veh)						
Upstream signal (ft)					1121	
pX, platoon unblocked	0.91	0.91	0.91			
vC, conflicting volume	755	361	405			
vC1, stage 1 conf vol						
vC2, stage 2 conf vol						
vCu, unblocked vol	683	251	299			
tC, single (s)	6.4	6.2	4.1			
tC, 2 stage (s)						
tF (s)	3.5	3.3	2.2			
p0 queue free %	86	86	98			
cM capacity (veh/h)	369	719	1150			

Direction, Lane #	EB 1	NB 1	SB 1
Volume Total	154	367	405
Volume Left	51	27	0
Volume Right	103	0	89
cSH	547	1150	1700
Volume to Capacity	0.28	0.02	0.24
Queue Length 95th (ft)	29	2	0
Control Delay (s)	14.1	0.8	0.0
Lane LOS	B	A	
Approach Delay (s)	14.1	0.8	0.0
Approach LOS	B		

Intersection Summary			
Average Delay	2.7		
Intersection Capacity Utilization	52.2%	ICU Level of Service	A
Analysis Period (min)	15		

Movement	WBL	WBR	NBT	NBR	SBL	SBT
Lane Configurations						
Volume (veh/h)	142	58	279	43	34	301
Sign Control	Stop		Free			Free
Grade	0%		0%			0%
Peak Hour Factor	0.94	0.94	0.94	0.94	0.94	0.94
Hourly flow rate (vph)	151	62	297	46	36	320
Pedestrians						
Lane Width (ft)						
Walking Speed (ft/s)						
Percent Blockage						
Right turn flare (veh)						
Median type			None			None
Median storage veh)						
Upstream signal (ft)						
pX, platoon unblocked						
vC, conflicting volume	712	320			343	
vC1, stage 1 conf vol						
vC2, stage 2 conf vol						
vCu, unblocked vol	712	320			343	
tC, single (s)	6.4	6.2			4.1	
tC, 2 stage (s)						
tF (s)	3.5	3.3			2.2	
p0 queue free %	61	91			97	
cM capacity (veh/h)	387	721			1216	

Direction, Lane #	WB 1	NB 1	SB 1
Volume Total	213	343	356
Volume Left	151	0	36
Volume Right	62	46	0
cSH	447	1700	1216
Volume to Capacity	0.48	0.20	0.03
Queue Length 95th (ft)	63	0	2
Control Delay (s)	20.2	0.0	1.1
Lane LOS	C		A
Approach Delay (s)	20.2	0.0	1.1
Approach LOS	C		

Intersection Summary			
Average Delay	5.1		
Intersection Capacity Utilization	56.4%	ICU Level of Service	B
Analysis Period (min)	15		

Movement	EBL	EBR	NBL	NBT	SBT	SBR
Lane Configurations						
Volume (veh/h)	20	60	19	318	357	96
Sign Control	Stop			Free	Free	
Grade	0%			0%	0%	
Peak Hour Factor	0.93	0.93	0.93	0.93	0.93	0.93
Hourly flow rate (vph)	22	65	20	342	384	103
Pedestrians						
Lane Width (ft)						
Walking Speed (ft/s)						
Percent Blockage						
Right turn flare (veh)						
Median type				None	None	
Median storage veh)						
Upstream signal (ft)				1230		
pX, platoon unblocked						
vC, conflicting volume	818	435	487			
vC1, stage 1 conf vol						
vC2, stage 2 conf vol						
vCu, unblocked vol	818	435	487			
tC, single (s)	6.4	6.2	4.1			
tC, 2 stage (s)						
tF (s)	3.5	3.3	2.2			
p0 queue free %	94	90	98			
cM capacity (veh/h)	339	621	1076			

Direction, Lane #	EB 1	NB 1	SB 1
Volume Total	86	362	487
Volume Left	22	20	0
Volume Right	65	0	103
cSH	514	1076	1700
Volume to Capacity	0.17	0.02	0.29
Queue Length 95th (ft)	15	1	0
Control Delay (s)	13.4	0.7	0.0
Lane LOS	B	A	
Approach Delay (s)	13.4	0.7	0.0
Approach LOS	B		

Intersection Summary			
Average Delay	1.5		
Intersection Capacity Utilization	43.8%	ICU Level of Service	A
Analysis Period (min)	15		

Movement	EBL	EBT	EBR	WBL	WBT	WBR	NBL	NBT	NBR	SBL	SBT	SBR
Lane Configurations												
Volume (veh/h)	57	7	47	54	30	7	10	280	32	2	351	54
Sign Control		Stop			Stop			Free			Free	
Grade		0%			0%			0%			0%	
Peak Hour Factor	0.87	0.87	0.87	0.87	0.87	0.87	0.87	0.87	0.87	0.87	0.87	0.87
Hourly flow rate (vph)	66	8	54	62	34	8	11	322	37	2	403	62
Pedestrians												
Lane Width (ft)												
Walking Speed (ft/s)												
Percent Blockage												
Right turn flare (veh)												
Median type								None			None	
Median storage veh)												
Upstream signal (ft)								904				
pX, platoon unblocked	0.88	0.88		0.88	0.88	0.88				0.88		
vC, conflicting volume	828	821	434	860	833	340	466			359		
vC1, stage 1 conf vol												
vC2, stage 2 conf vol												
vCu, unblocked vol	732	724	434	769	739	175	466			196		
tC, single (s)	7.1	6.5	6.2	7.1	6.5	6.2	4.1			4.1		
tC, 2 stage (s)												
tF (s)	3.5	4.0	3.3	3.5	4.0	3.3	2.2			2.2		
p0 queue free %	75	97	91	75	88	99	99			100		
cM capacity (veh/h)	263	304	622	247	299	760	1096			1205		

Direction, Lane #	EB 1	WB 1	NB 1	SB 1
Volume Total	128	105	370	468
Volume Left	66	62	11	2
Volume Right	54	8	37	62
cSH	352	277	1096	1205
Volume to Capacity	0.36	0.38	0.01	0.00
Queue Length 95th (ft)	40	42	1	0
Control Delay (s)	20.9	25.7	0.4	0.1
Lane LOS	C	D	A	A
Approach Delay (s)	20.9	25.7	0.4	0.1
Approach LOS	C	D		

Intersection Summary			
Average Delay	5.2		
Intersection Capacity Utilization	37.9%	ICU Level of Service	A
Analysis Period (min)	15		

Movement	EBL	EBT	EBR	WBL	WBT	WBR	NBL	NBT	NBR	SBL	SBT	SBR
Lane Configurations												
Volume (veh/h)	7	3	4	19	0	0	4	320	10	1	440	6
Sign Control		Stop			Stop			Free			Free	
Grade		0%			0%			0%			0%	
Peak Hour Factor	0.91	0.91	0.91	0.91	0.91	0.91	0.91	0.91	0.91	0.91	0.91	0.91
Hourly flow rate (vph)	8	3	4	21	0	0	4	352	11	1	484	7
Pedestrians												
Lane Width (ft)												
Walking Speed (ft/s)												
Percent Blockage												
Right turn flare (veh)												
Median type								None			None	
Median storage veh)												
Upstream signal (ft)								601				
pX, platoon unblocked	0.83	0.83		0.83	0.83	0.83				0.83		
vC, conflicting volume	855	860	487	861	858	357	490			363		
vC1, stage 1 conf vol												
vC2, stage 2 conf vol												
vCu, unblocked vol	721	727	487	728	725	119	490			126		
tC, single (s)	7.1	6.5	6.2	7.1	6.5	6.2	4.1			4.1		
tC, 2 stage (s)												
tF (s)	3.5	4.0	3.3	3.5	4.0	3.3	2.2			2.2		
p0 queue free %	97	99	99	92	100	100	100			100		
cM capacity (veh/h)	283	289	581	275	290	772	1073			1209		

Direction, Lane #	EB 1	WB 1	NB 1	SB 1
Volume Total	15	21	367	491
Volume Left	8	21	4	1
Volume Right	4	0	11	7
cSH	333	275	1073	1209
Volume to Capacity	0.05	0.08	0.00	0.00
Queue Length 95th (ft)	4	6	0	0
Control Delay (s)	16.3	19.2	0.1	0.0
Lane LOS	C	C	A	A
Approach Delay (s)	16.3	19.2	0.1	0.0
Approach LOS	C	C		

Intersection Summary			
Average Delay	0.8		
Intersection Capacity Utilization	34.1%	ICU Level of Service	A
Analysis Period (min)	15		

Movement	EBL	EBT	EBR	WBL	WBT	WBR	NBL	NBT	NBR	SBL	SBT	SBR
Lane Configurations												
Volume (veh/h)	11	30	123	12	67	1	17	324	16	7	395	59
Sign Control		Stop			Stop			Free			Free	
Grade		0%			0%			0%			0%	
Peak Hour Factor	0.93	0.93	0.93	0.93	0.93	0.93	0.93	0.93	0.93	0.93	0.93	0.93
Hourly flow rate (vph)	12	32	132	13	72	1	18	348	17	8	425	63
Pedestrians												
Lane Width (ft)												
Walking Speed (ft/s)												
Percent Blockage												
Right turn flare (veh)												
Median type								None			None	
Median storage veh)												
Upstream signal (ft)								300				
pX, platoon unblocked	0.79	0.79		0.79	0.79	0.79				0.79		
vC, conflicting volume	902	874	456	1013	897	357	488			366		
vC1, stage 1 conf vol												
vC2, stage 2 conf vol												
vCu, unblocked vol	743	706	456	884	736	52	488			63		
tC, single (s)	7.1	6.5	6.2	7.1	6.5	6.2	4.1			4.1		
tC, 2 stage (s)												
tF (s)	3.5	4.0	3.3	3.5	4.0	3.3	2.2			2.2		
p0 queue free %	94	88	78	91	73	100	98			99		
cM capacity (veh/h)	203	278	604	147	267	802	1075			1216		

Direction, Lane #	EB 1	WB 1	NB 1	SB 1
Volume Total	176	86	384	496
Volume Left	12	13	18	8
Volume Right	132	1	17	63
cSH	448	240	1075	1216
Volume to Capacity	0.39	0.36	0.02	0.01
Queue Length 95th (ft)	46	39	1	0
Control Delay (s)	18.1	28.2	0.6	0.2
Lane LOS	C	D	A	A
Approach Delay (s)	18.1	28.2	0.6	0.2
Approach LOS	C	D		

Intersection Summary			
Average Delay	5.2		
Intersection Capacity Utilization	45.5%	ICU Level of Service	A
Analysis Period (min)	15		

Lane Group	EBL	EBT	EBR	WBL	WBT	NBL	NBT	SBL	SBT
Lane Group Flow (vph)	136	688	238	512	696	235	557	32	549
v/c Ratio	0.23	0.74	0.54	0.77	0.75	0.71	0.72	0.08	0.73
Control Delay	20.4	57.5	32.1	39.1	71.3	57.1	59.5	44.7	75.5
Queue Delay	0.0	0.0	0.0	1.6	0.9	0.0	0.0	0.0	0.0
Total Delay	20.4	57.5	32.1	40.6	72.3	57.1	59.5	44.7	75.5
Queue Length 50th (ft)	76	302	102	427	426	212	233	27	338
Queue Length 95th (ft)	131	467	231	613	597	334	363	61	475
Internal Link Dist (ft)		1441			531		229		156
Turn Bay Length (ft)	130			95		155		130	
Base Capacity (vph)	756	1028	483	740	1026	438	845	446	838
Starvation Cap Reductn	0	0	0	97	127	0	0	0	0
Spillback Cap Reductn	0	0	0	0	0	0	0	0	0
Storage Cap Reductn	0	0	0	0	0	0	0	0	0
Reduced v/c Ratio	0.18	0.67	0.49	0.80	0.77	0.54	0.66	0.07	0.66

Intersection Summary

Movement	EBL	EBT	EBR	WBL	WBT	WBR	NBL	NBT	NBR	SBL	SBT	SBR
Lane Configurations												
Volume (vph)	125	633	219	471	626	15	216	260	252	29	455	50
Ideal Flow (vphpl)	1900	1900	1900	1900	1900	1900	1900	1900	1900	1900	1900	1900
Total Lost time (s)	3.0	3.0	5.0	3.0	3.0		3.0	3.0		3.0	3.0	
Lane Util. Factor	1.00	0.95	1.00	1.00	0.95		1.00	0.95		1.00	0.95	
Frt	1.00	1.00	0.85	1.00	1.00		1.00	0.93		1.00	0.99	
Flt Protected	0.95	1.00	1.00	0.95	1.00		0.95	1.00		0.95	1.00	
Satd. Flow (prot)	1770	3539	1583	1770	3527		1770	3278		1770	3487	
Flt Permitted	0.14	1.00	1.00	0.39	1.00		0.19	1.00		0.44	1.00	
Satd. Flow (perm)	262	3539	1583	727	3527		356	3278		826	3487	
Peak-hour factor, PHF	0.92	0.92	0.92	0.92	0.92	0.92	0.92	0.92	0.92	0.92	0.92	0.92
Adj. Flow (vph)	136	688	238	512	680	16	235	283	274	32	495	54
RTOR Reduction (vph)	0	0	116	0	1	0	0	79	0	0	4	0
Lane Group Flow (vph)	136	688	122	512	695	0	235	478	0	32	545	0
Turn Type	custom	NA	custom	custom	NA		custom	NA		custom	NA	
Protected Phases	1 2	2 4		1 3	3 4		5 6	6 8		5 7	7 8	
Permitted Phases	4		4	4			8			8		
Actuated Green, G (s)	94.6	46.4	38.1	91.5	46.3		59.4	37.0		58.0	38.6	
Effective Green, g (s)	94.6	46.4	38.1	91.5	46.3		59.4	37.0		58.0	38.6	
Actuated g/C Ratio	0.51	0.25	0.21	0.49	0.25		0.32	0.20		0.31	0.21	
Clearance Time (s)			5.0									
Vehicle Extension (s)			3.0									
Lane Grp Cap (vph)	595	888	326	661	883		325	656		393	728	
v/s Ratio Prot	0.07	c0.19		c0.22	c0.20		c0.11	0.15		0.01	c0.16	
v/s Ratio Perm	0.05		0.08	0.16			0.12			0.01		
v/c Ratio	0.23	0.77	0.37	0.77	0.79		0.72	0.73		0.08	0.75	
Uniform Delay, d1	25.9	64.4	63.2	33.2	64.8		50.4	69.3		44.4	68.7	
Progression Factor	1.00	1.00	1.00	1.00	1.00		1.00	1.00		1.00	1.00	
Incremental Delay, d2	0.2	4.3	0.7	5.7	4.7		7.7	4.0		0.1	4.2	
Delay (s)	26.1	68.7	63.9	38.9	69.4		58.1	73.3		44.5	72.9	
Level of Service	C	E	E	D	E		E	E		D	E	
Approach Delay (s)		62.2			56.5			68.8			71.3	
Approach LOS		E			E			E			E	

Intersection Summary			
HCM Average Control Delay	63.2	HCM Level of Service	E
HCM Volume to Capacity ratio	0.74		
Actuated Cycle Length (s)	185.0	Sum of lost time (s)	12.0
Intersection Capacity Utilization	83.1%	ICU Level of Service	E
Analysis Period (min)	15		
c Critical Lane Group			

Lane Group	EBL	EBT	WBT	SBL
Lane Group Flow (vph)	359	757	941	359
v/c Ratio	0.93	0.28	0.35	0.94
Control Delay	54.1	8.7	9.4	104.0
Queue Delay	3.3	0.9	0.0	0.0
Total Delay	57.4	9.6	9.4	104.0
Queue Length 50th (ft)	397	168	223	446
Queue Length 95th (ft)	#729	194	254	#669
Internal Link Dist (ft)		531	201	216
Turn Bay Length (ft)	75			
Base Capacity (vph)	388	2670	2659	380
Starvation Cap Reductn	10	1532	0	0
Spillback Cap Reductn	0	0	0	0
Storage Cap Reductn	0	0	0	0
Reduced v/c Ratio	0.95	0.67	0.35	0.94

Intersection Summary

95th percentile volume exceeds capacity, queue may be longer.
Queue shown is maximum after two cycles.

Movement	EBL	EBT	WBT	WBR	SBL	SBR
Lane Configurations						
Volume (vph)	345	727	872	32	86	258
Ideal Flow (vphpl)	1900	1900	1900	1900	1900	1900
Total Lost time (s)	5.0	5.0	5.0		5.0	
Lane Util. Factor	1.00	0.95	0.95		1.00	
Frt	1.00	1.00	0.99		0.90	
Flt Protected	0.95	1.00	1.00		0.99	
Satd. Flow (prot)	1770	3539	3521		1654	
Flt Permitted	0.28	1.00	1.00		0.99	
Satd. Flow (perm)	513	3539	3521		1654	
Peak-hour factor, PHF	0.96	0.96	0.96	0.96	0.96	0.96
Adj. Flow (vph)	359	757	908	33	90	269
RTOR Reduction (vph)	0	0	1	0	49	0
Lane Group Flow (vph)	359	757	940	0	310	0
Turn Type	Perm	NA	NA		NA	
Protected Phases		4	8		6	
Permitted Phases	4					
Actuated Green, G (s)	166.0	166.0	166.0		44.0	
Effective Green, g (s)	166.0	166.0	166.0		44.0	
Actuated g/C Ratio	0.75	0.75	0.75		0.20	
Clearance Time (s)	5.0	5.0	5.0		5.0	
Vehicle Extension (s)	3.0	3.0	3.0		3.0	
Lane Grp Cap (vph)	387	2670	2657		331	
v/s Ratio Prot		0.21	0.27		c0.19	
v/s Ratio Perm	c0.70					
v/c Ratio	0.93	0.28	0.35		0.94	
Uniform Delay, d1	22.1	8.4	9.0		86.6	
Progression Factor	1.00	1.00	1.00		1.00	
Incremental Delay, d2	28.0	0.1	0.1		35.8	
Delay (s)	50.1	8.5	9.1		122.4	
Level of Service	D	A	A		F	
Approach Delay (s)		21.9	9.1		122.4	
Approach LOS		C	A		F	

Intersection Summary			
HCM Average Control Delay	31.8	HCM Level of Service	C
HCM Volume to Capacity ratio	0.93		
Actuated Cycle Length (s)	220.0	Sum of lost time (s)	10.0
Intersection Capacity Utilization	77.4%	ICU Level of Service	D
Analysis Period (min)	15		
c Critical Lane Group			

Lane Group	EBL	EBT	EBR	WBL	WBT	WBR	NBL	NBT	NBR	SBL	SBT	SBR
Lane Group Flow (vph)	436	648	64	414	486	80	92	1870	497	317	3160	852
v/c Ratio	0.87	1.20	0.23	1.24	0.79	0.16	0.83	0.82	0.48	0.92	1.07	0.40
Control Delay	81.2	159.9	45.6	171.9	74.1	33.4	78.1	40.5	13.2	76.2	70.7	6.3
Queue Delay	0.0	0.0	0.0	0.0	0.0	0.0	0.0	0.0	0.0	0.0	0.0	0.0
Total Delay	81.2	159.9	45.6	171.9	74.1	33.4	78.1	40.5	13.2	76.2	70.7	6.3
Queue Length 50th (ft)	218	~279	44	~454	172	50	38	594	202	251	~1252	131
Queue Length 95th (ft)	#305	#369	90	#672	217	93	#147	660	288	#416	#1320	163
Internal Link Dist (ft)		484			394			469			768	
Turn Bay Length (ft)	200		200	286		200	160		200	130		200
Base Capacity (vph)	504	542	284	333	616	534	111	2273	1045	368	2949	2135
Starvation Cap Reductn	0	0	0	0	0	0	0	0	0	0	0	0
Spillback Cap Reductn	0	0	0	0	0	0	0	0	0	0	0	0
Storage Cap Reductn	0	0	0	0	0	0	0	0	0	0	0	0
Reduced v/c Ratio	0.87	1.20	0.23	1.24	0.79	0.15	0.83	0.82	0.48	0.86	1.07	0.40

Intersection Summary

~ Volume exceeds capacity, queue is theoretically infinite.
Queue shown is maximum after two cycles.

95th percentile volume exceeds capacity, queue may be longer.
Queue shown is maximum after two cycles.

Movement	EBL	EBT	EBR	WBL	WBT	WBR	NBL	NBT	NBR	SBL	SBT	SBR
Lane Configurations												
Volume (vph)	401	596	59	381	447	74	85	1720	457	292	2907	784
Ideal Flow (vphpl)	1900	1900	1900	1900	1900	1900	1900	1900	1900	1900	1900	1900
Total Lost time (s)	5.0	5.0	3.0	5.0	5.0	3.0	3.0	5.0	5.0	3.0	5.0	5.0
Lane Util. Factor	0.97	0.91	1.00	1.00	0.91	1.00	1.00	0.91	1.00	1.00	0.91	0.88
Frt	1.00	1.00	0.85	1.00	1.00	0.85	1.00	1.00	0.85	1.00	1.00	0.85
Flt Protected	0.95	1.00	1.00	0.95	1.00	1.00	0.95	1.00	1.00	0.95	1.00	1.00
Satd. Flow (prot)	3433	5085	1583	1770	5085	1583	1770	5085	1583	1770	5085	2787
Flt Permitted	0.95	1.00	1.00	0.22	1.00	1.00	0.06	1.00	1.00	0.06	1.00	1.00
Satd. Flow (perm)	3433	5085	1583	409	5085	1583	111	5085	1583	106	5085	2787
Peak-hour factor, PHF	0.92	0.92	0.92	0.92	0.92	0.92	0.92	0.92	0.92	0.92	0.92	0.92
Adj. Flow (vph)	436	648	64	414	486	80	92	1870	497	317	3160	852
RTOR Reduction (vph)	0	0	10	0	0	5	0	0	35	0	0	19
Lane Group Flow (vph)	436	648	54	414	486	75	92	1870	462	317	3160	833
Turn Type	Prot	NA	pm+ov	pm+pt	NA	pm+ov	pm+pt	NA	pm+ov	pm+pt	NA	pm+ov
Protected Phases	7	4	5	3	8	1	5	2	3	1	6	7
Permitted Phases			4	8		8	2		2	6		6
Actuated Green, G (s)	21.8	16.0	21.0	42.2	18.2	43.2	72.0	67.0	91.0	95.0	87.0	108.8
Effective Green, g (s)	21.8	16.0	21.0	42.2	18.2	43.2	72.0	67.0	91.0	95.0	87.0	108.8
Actuated g/C Ratio	0.15	0.11	0.14	0.28	0.12	0.29	0.48	0.45	0.61	0.63	0.58	0.73
Clearance Time (s)	5.0	5.0	3.0	5.0	5.0	3.0	3.0	5.0	5.0	3.0	5.0	5.0
Vehicle Extension (s)	3.0	3.0	3.0	3.0	3.0	3.0	3.0	3.0	3.0	3.0	3.0	3.0
Lane Grp Cap (vph)	499	542	222	333	617	456	109	2271	1013	344	2949	2114
v/s Ratio Prot	0.13	0.13	0.01	c0.20	0.10	0.03	0.03	0.37	0.07	c0.15	c0.62	0.06
v/s Ratio Perm			0.03	c0.15		0.02	0.38		0.22	0.43		0.24
v/c Ratio	0.87	1.20	0.24	1.24	0.79	0.16	0.84	0.82	0.46	0.92	1.07	0.39
Uniform Delay, d1	62.8	67.0	57.4	49.0	64.0	39.9	35.3	36.3	16.0	49.3	31.5	7.9
Progression Factor	1.00	1.00	1.00	1.00	1.00	1.00	1.00	1.00	1.00	1.00	1.00	1.00
Incremental Delay, d2	15.5	105.0	0.6	132.3	6.6	0.2	41.7	3.5	0.3	29.3	39.6	0.1
Delay (s)	78.3	172.0	58.0	181.3	70.6	40.1	77.0	39.9	16.4	78.6	71.1	8.0
Level of Service	E	F	E	F	E	D	E	D	B	E	E	A
Approach Delay (s)		130.1			114.9			36.5			59.3	
Approach LOS		F			F			D			E	

Intersection Summary			
HCM Average Control Delay	68.2	HCM Level of Service	E
HCM Volume to Capacity ratio	1.10		
Actuated Cycle Length (s)	150.0	Sum of lost time (s)	13.0
Intersection Capacity Utilization	109.3%	ICU Level of Service	H
Analysis Period (min)	15		
c Critical Lane Group			

Movement	EBL	EBT	EBR	WBL	WBT	WBR	NBL	NBT	NBR	SBL	SBT	SBR
Lane Configurations												
Volume (vph)	401	596	59	381	447	74	85	1720	457	292	2907	784
Movement Number	7	4	14	3	8	18	5	2	12	1	6	16
Initial Queue, veh	0	0	0	0	0	0	0	0	0	0	0	0
Ped-Bike Adj. Factor (A_pbT)	1.00		1.00	1.00		1.00	1.00		1.00	1.00		1.00
Parking, Bus Adj. Factors	1.00	1.00	1.00	1.00	1.00	1.00	1.00	1.00	1.00	1.00	1.00	1.00
Adj. Sat. Flow Rate, veh/h/ln	1863	1863	1863	1863	1863	1863	1863	1863	1863	1863	1863	1863
Lanes	2	3	1	1	3	1	1	3	1	1	3	2
Lane Assignment												
Capacity, veh/h	481	542	222	332	645	428	108	2388	997	342	2949	2006
Proportion Arriving On Green	0.14	0.11	0.11	0.16	0.13	0.13	0.03	0.47	0.47	0.14	0.58	0.58
Movement Delay, s/veh	82.9	171.5	58.5	182.7	68.2	42.2	81.1	36.0	16.8	73.1	71.0	8.6
Movement LOS	F	F	E	F	E	D	F	D	B	E	F	A
Approach Volume, veh/h		1148			980			2459			4329	
Approach Delay, s/veh		131.6			114.4			33.8			58.9	
Approach LOS		F			F			C			E	

Timer:	1	2	3	4	5	6	7	8
Assigned Phase	1	2	3	4	5	6	7	8
Case No	1.1	3.0	1.1	3.0	1.1	3.0	2.0	3.0
Phase Duration (G+Y+Rc), s	24.56	75.44	29.00	21.00	8.00	92.00	25.97	24.03
Change Period (Y+Rc), s	3.00	5.00	5.00	5.00	3.00	5.00	5.00	5.00
Max. Allowable Headway (MAH), s	4.00	3.93	4.00	3.92	4.00	3.93	4.00	3.92
Maximum Green Setting (Gmax), s	27.00	65.00	24.00	16.00	5.00	87.00	22.00	18.00
Max. Queue Clearance Time (g_c+I1), s	21.00	48.26	26.00	18.00	6.10	89.00	20.71	15.84
Green Extension Time (g_e), s	0.56	16.62	0.00	0.00	0.00	0.00	0.26	1.24
Probability of Phase Call (p_c)	1.000	1.000	1.000	1.000	0.979	1.000	1.000	1.000
Probability of Max Out (p_x)	0.329	0.993	1.000	1.000	1.000	1.000	1.000	1.000

Left-Turn Movement Data				
Assigned Movement	1	3	5	7
Mvmt. Sat Flow, veh/h	1774.04	1774.04	1774.04	3441.64

Through Movement Data				
Assigned Movement	2	4	6	8
Mvmt. Sat Flow, veh/h	5085.29	5085.29	5085.29	5085.29

Right-Turn Movement Data				
Assigned Movement	12	14	16	18
Mvmt. Sat Flow, veh/h	1583.33	1583.33	2786.67	1583.33

Left Lane Group Data								
Assigned Movement	1	0	3	0	5	0	7	0
Lane Assignment	L (Pr/Pm)		L (Pr/Pm)		L (Pr/Pm)		L (Prot)	
Lanes in Group	1	0	1	0	1	0	2	0
Group Volume (v), veh/h	317.4	0.0	414.1	0.0	92.4	0.0	435.9	0.0
Group Sat. Flow (s), veh/h/ln	1774.0	0.0	1774.0	0.0	1774.0	0.0	1720.8	0.0
Queue Serve Time (g_s), s	19.0	0.0	24.0	0.0	4.1	0.0	18.7	0.0
Cycle Queue Clear Time (g_c), s	19.0	0.0	24.0	0.0	4.1	0.0	18.7	0.0

Perm LT Sat Flow Rate (s_l), veh/h/ln	243.6	0.0	780.0	0.0	67.1	0.0	0.0	0.0
Shared LT Sat Flow (s_sh), veh/h/ln	0.0	0.0	0.0	0.0	0.0	0.0	0.0	0.0
Perm LT Eff. Green (g_p), s	89.0	0.0	19.1	0.0	70.4	0.0	0.0	0.0
Perm LT Serve Time (g_u), s	24.2	0.0	0.0	0.0	2.0	0.0	0.0	0.0
Perm LT Que Serve Time (g_ps), s	24.2	0.0	0.0	0.0	2.0	0.0	0.0	0.0
Time to First Blk (g_f), s	0.0	0.0	0.0	0.0	0.0	0.0	0.0	0.0
Serve Time pre Blk (g_fs), s	0.0	0.0	0.0	0.0	0.0	0.0	0.0	0.0
Proportion LT Inside Lane (P_L)	1.000	0.000	1.000	0.000	1.000	0.000	1.000	0.000
Lane Group Capacity (c), veh/h	342.3	0.0	331.8	0.0	108.0	0.0	481.2	0.0
Volume-to-Capacity Ratio (X)	0.927	0.000	1.248	0.000	0.855	0.000	0.906	0.000
Available Capacity (c_a), veh/h	406.6	0.0	331.8	0.0	108.0	0.0	504.8	0.0
Upstream Filter Factor (I)	1.000	0.000	1.000	0.000	1.000	0.000	1.000	0.000
Uniform Delay (d1), s/veh	48.2	0.0	48.4	0.0	36.1	0.0	63.5	0.0
Incremental Delay (d2), s/veh	25.0	0.0	134.3	0.0	45.0	0.0	19.4	0.0
Initial Queue Delay (d3), s/veh	0.0	0.0	0.0	0.0	0.0	0.0	0.0	0.0
Control Delay (d), s/veh	73.1	0.0	182.7	0.0	81.1	0.0	82.9	0.0
First-Term Queue (Q1), veh/ln	8.2	0.0	10.9	0.0	1.8	0.0	8.2	0.0
Second-Term Queue (Q2), veh/ln	2.4	0.0	12.4	0.0	1.4	0.0	1.3	0.0
Third-Term Queue (Q3), veh/ln	0.0	0.0	0.0	0.0	0.0	0.0	0.0	0.0
Percentile bk-of-que factor (f_B%)	1.000	0.000	1.000	0.000	1.000	0.000	1.000	0.000
Percentile Back of Queue (Q%), veh/ln	10.6	0.0	23.3	0.0	3.2	0.0	9.5	0.0
Percentile Storage Ratio (RQ%)	2.07	0.00	2.07	0.00	0.50	0.00	1.21	0.00
Initial Queue (Qb), veh	0.0	0.0	0.0	0.0	0.0	0.0	0.0	0.0
Final (Residual) Queue (Qe), veh	0.0	0.0	20.6	0.0	0.0	0.0	0.0	0.0
Saturated Delay (ds), s/veh	0.0	0.0	0.0	0.0	0.0	0.0	0.0	0.0
Saturated Queue (Qs), veh	0.0	0.0	0.0	0.0	0.0	0.0	0.0	0.0
Saturated Capacity (cs), veh/h	0.0	0.0	0.0	0.0	0.0	0.0	0.0	0.0
Initial Queue Clear Time (tc), h	0.0	0.0	0.3	0.0	0.0	0.0	0.0	0.0

Middle Lane Group Data								
Assigned Movement	0	2	0	4	0	6	0	8
Lane Assignment		T		T		T		T
Lanes in Group	0	3	0	3	0	3	0	3
Group Volume (v), veh/h	0.0	1869.6	0.0	647.8	0.0	3159.8	0.0	485.9
Group Sat. Flow (s), veh/h/ln	0.0	1695.1	0.0	1695.1	0.0	1695.1	0.0	1695.1
Queue Serve Time (g_s), s	0.0	46.3	0.0	16.0	0.0	87.0	0.0	13.8
Cycle Queue Clear Time (g_c), s	0.0	46.3	0.0	16.0	0.0	87.0	0.0	13.8
Lane Group Capacity (c), veh/h	0.0	2388.0	0.0	542.4	0.0	2949.5	0.0	645.1
Volume-to-Capacity Ratio (X)	0.000	0.783	0.000	1.194	0.000	1.071	0.000	0.753
Available Capacity (c_a), veh/h	0.0	2388.0	0.0	542.4	0.0	2949.5	0.0	645.1
Upstream Filter Factor (I)	0.000	1.000	0.000	1.000	0.000	1.000	0.000	1.000
Uniform Delay (d1), s/veh	0.0	33.4	0.0	67.0	0.0	31.5	0.0	63.2
Incremental Delay (d2), s/veh	0.0	2.6	0.0	104.5	0.0	39.5	0.0	5.0
Initial Queue Delay (d3), s/veh	0.0	0.0	0.0	0.0	0.0	0.0	0.0	0.0
Control Delay (d), s/veh	0.0	36.0	0.0	171.5	0.0	71.0	0.0	68.2
First-Term Queue (Q1), veh/ln	0.0	18.9	0.0	7.0	0.0	34.2	0.0	6.0
Second-Term Queue (Q2), veh/ln	0.0	0.6	0.0	5.2	0.0	10.8	0.0	0.3
Third-Term Queue (Q3), veh/ln	0.0	0.0	0.0	0.0	0.0	0.0	0.0	0.0
Percentile bk-of-que factor (f_B%)	0.000	1.000	0.000	1.000	0.000	1.000	0.000	1.000
Percentile Back of Queue (Q%), veh/ln	0.0	19.5	0.0	12.2	0.0	45.0	0.0	6.3
Percentile Storage Ratio (RQ%)	0.00	1.15	0.00	0.68	0.00	1.63	0.00	0.46

Initial Queue (Qb), veh	0.0	0.0	0.0	0.0	0.0	0.0	0.0	0.0
Final (Residual) Queue (Qe), veh	0.0	0.0	0.0	26.3	0.0	52.6	0.0	0.0
Saturated Delay (ds), s/veh	0.0	0.0	0.0	0.0	0.0	0.0	0.0	0.0
Saturated Queue (Qs), veh	0.0	0.0	0.0	0.0	0.0	0.0	0.0	0.0
Saturated Capacity (cs), veh/h	0.0	0.0	0.0	0.0	0.0	0.0	0.0	0.0
Initial Queue Clear Time (tc), h	0.0	0.0	0.0	0.3	0.0	0.3	0.0	0.0

Right Lane Group Data								
Assigned Movement	0	12	0	14	0	16	0	18
Lane Assignment		R		R		R		R
Lanes in Group	0	1	0	1	0	2	0	1
Group Volume (v), veh/h	0.0	496.7	0.0	64.1	0.0	852.2	0.0	80.4
Group Sat. Flow (s), veh/h/ln	0.0	1583.3	0.0	1583.3	0.0	1393.3	0.0	1583.3
Queue Serve Time (g_s), s	0.0	25.4	0.0	5.4	0.0	18.5	0.0	5.9
Cycle Queue Clear Time (g_c), s	0.0	25.4	0.0	5.4	0.0	18.5	0.0	5.9
Prot RT Sat Flow Rate (s_R), veh/h/ln	0.0	1583.3	0.0	1583.3	0.0	1393.3	0.0	1583.3
Prot RT Eff. Green (g_R), s	0.0	24.0	0.0	5.0	0.0	21.0	0.0	21.6
Proportion RT Outside Lane (P_R)	0.000	1.000	0.000	1.000	0.000	1.000	0.000	1.000
Lane Group Capacity (c), veh/h	0.0	996.8	0.0	221.7	0.0	2005.9	0.0	428.4
Volume-to-Capacity Ratio (X)	0.000	0.498	0.000	0.289	0.000	0.425	0.000	0.188
Available Capacity (c_a), veh/h	0.0	996.8	0.0	221.7	0.0	2005.9	0.0	428.4
Upstream Filter Factor (I)	0.000	1.000	0.000	1.000	0.000	1.000	0.000	1.000
Uniform Delay (d1), s/veh	0.0	15.0	0.0	57.8	0.0	8.5	0.0	42.0
Incremental Delay (d2), s/veh	0.0	1.8	0.0	0.7	0.0	0.1	0.0	0.2
Initial Queue Delay (d3), s/veh	0.0	0.0	0.0	0.0	0.0	0.0	0.0	0.0
Control Delay (d), s/veh	0.0	16.8	0.0	58.5	0.0	8.6	0.0	42.2
First-Term Queue (Q1), veh/ln	0.0	9.1	0.0	2.2	0.0	5.4	0.0	2.3
Second-Term Queue (Q2), veh/ln	0.0	0.5	0.0	0.0	0.0	0.0	0.0	0.0
Third-Term Queue (Q3), veh/ln	0.0	0.0	0.0	0.0	0.0	0.0	0.0	0.0
Percentile bk-of-que factor (f_B%)	0.000	1.000	0.000	1.000	0.000	1.000	0.000	1.000
Percentile Back of Queue (Q%), veh/ln	0.0	9.6	0.0	2.2	0.0	5.4	0.0	2.4
Percentile Storage Ratio (RQ%)	0.00	1.22	0.00	0.29	0.00	0.69	0.00	0.30
Initial Queue (Qb), veh	0.0	0.0	0.0	0.0	0.0	0.0	0.0	0.0
Final (Residual) Queue (Qe), veh	0.0	0.0	0.0	0.0	0.0	0.0	0.0	0.0
Saturated Delay (ds), s/veh	0.0	0.0	0.0	0.0	0.0	0.0	0.0	0.0
Saturated Queue (Qs), veh	0.0	0.0	0.0	0.0	0.0	0.0	0.0	0.0
Saturated Capacity (cs), veh/h	0.0	0.0	0.0	0.0	0.0	0.0	0.0	0.0
Initial Queue Clear Time (tc), h	0.0	0.0	0.0	0.0	0.0	0.0	0.0	0.0

Intersection Summary	
HCM Average Control Delay	67.4
HCM Level of Service	E

Lane Group	EBT	WBT	NET
Lane Group Flow (vph)	66	78	2752
v/c Ratio	0.81	0.57	0.62
Control Delay	153.2	91.8	4.3
Queue Delay	0.0	0.0	0.0
Total Delay	153.2	91.8	4.3
Queue Length 50th (ft)	91	86	292
Queue Length 95th (ft)	157	152	407
Internal Link Dist (ft)	48	206	515
Turn Bay Length (ft)			
Base Capacity (vph)	145	236	4456
Starvation Cap Reductn	0	0	0
Spillback Cap Reductn	0	0	0
Storage Cap Reductn	0	0	0
Reduced v/c Ratio	0.46	0.33	0.62

Intersection Summary

Movement	EBL	EBT	EBR	WBL	WBT	WBR	NEL	NET	NER	SWL	SWT	SWR
Lane Configurations												
Volume (vph)	32	30	0	0	33	40	42	2474	44	0	0	0
Ideal Flow (vphpl)	1900	1900	1900	1900	1900	1900	1900	1900	1900	1900	1900	1900
Total Lost time (s)		5.0			5.0			5.0				
Lane Util. Factor		1.00			1.00			0.91				
Frt		1.00			0.93			1.00				
Flt Protected		0.97			1.00			1.00				
Satd. Flow (prot)		1816			1724			5068				
Flt Permitted		0.60			1.00			1.00				
Satd. Flow (perm)		1116			1724			5068				
Peak-hour factor, PHF	0.93	0.93	0.93	0.93	0.93	0.93	0.93	0.93	0.93	0.93	0.93	0.93
Adj. Flow (vph)	34	32	0	0	35	43	45	2660	47	0	0	0
RTOR Reduction (vph)	0	0	0	0	13	0	0	1	0	0	0	0
Lane Group Flow (vph)	0	66	0	0	65	0	0	2751	0	0	0	0
Turn Type	Perm	NA			NA		Split	NA				
Protected Phases		4			8		2	2				
Permitted Phases	4							2				
Actuated Green, G (s)		15.1			15.1			183.1				
Effective Green, g (s)		15.1			15.1			183.1				
Actuated g/C Ratio		0.07			0.07			0.88				
Clearance Time (s)		5.0			5.0			5.0				
Vehicle Extension (s)		3.0			3.0			3.0				
Lane Grp Cap (vph)		81			125			4457				
v/s Ratio Prot					0.04			c0.54				
v/s Ratio Perm		c0.06										
v/c Ratio		0.81			0.52			0.62				
Uniform Delay, d1		95.2			93.1			3.3				
Progression Factor		1.00			1.00			1.00				
Incremental Delay, d2		44.4			3.9			0.6				
Delay (s)		139.6			96.9			4.0				
Level of Service		F			F			A				
Approach Delay (s)		139.6			96.9			4.0			0.0	
Approach LOS		F			F			A			A	

Intersection Summary			
HCM Average Control Delay	9.6	HCM Level of Service	A
HCM Volume to Capacity ratio	0.63		
Actuated Cycle Length (s)	208.2	Sum of lost time (s)	10.0
Intersection Capacity Utilization	68.0%	ICU Level of Service	C
Analysis Period (min)	15		
c Critical Lane Group			

Movement	EBL	EBT	EBR	WBL	WBT	WBR	NEL	NET	NER	SWL	SWT	SWR
Lane Configurations												
Volume (vph)	32	30	0	0	33	40	42	2474	44	0	0	0
Movement Number	7	4	14	3	8	18	5	2	12	1	6	16
Initial Queue, veh	0	0	0	0	0	0	0	0	0	0	0	0
Ped-Bike Adj. Factor (A_pbT)	1.00		1.00	1.00		1.00	1.00		1.00	1.00		1.00
Parking, Bus Adj. Factors	1.00	1.00	1.00	1.00	1.00	1.00	1.00	1.00	1.00	1.00	1.00	1.00
Adj. Sat. Flow Rate, veh/h/ln	1863	1863	1900	1900	1863	1863	1863	1863	1863	1900	1900	1900
Lanes	0	1	0	0	1	0	0	3	0	0	0	0
Lane Assignment												
Capacity, veh/h	58	46	0	0	59	71	75	4714	86	0	0	0
Proportion Arriving On Green	0.08	0.08	0.00	0.00	0.08	0.08	0.88	0.88	0.88	0.00	0.00	0.00
Movement Delay, s/veh	101.5	0.0	0.0	0.0	0.0	97.9	5.0	4.4	4.4	0.0	0.0	0.0
Movement LOS	F					F	A	A	A			
Approach Volume, veh/h		67			78			2753			0	
Approach Delay, s/veh		101.5			97.9			4.6			0.0	
Approach LOS		F			F			A				

Timer:	1	2	3	4	5	6	7	8
Assigned Phase		2		4				8
Case No		12.0		8.0				8.0
Phase Duration (G+Y+Rc), s		188.00		20.95				20.95
Change Period (Y+Rc), s		5.00		5.00				5.00
Max. Allowable Headway (MAH), s		3.91		4.06				4.06
Maximum Green Setting (Gmax), s		183.00		27.00				27.00
Max. Queue Clearance Time (g_c+I1), s		30.73		15.65				11.35
Green Extension Time (g_e), s		25.38		0.30				0.36
Probability of Phase Call (p_c)		1.000		1.000				1.000
Probability of Max Out (p_x)		0.022		0.002				0.000

Left-Turn Movement Data				
Assigned Movement		5		7
Mvmt. Sat Flow, veh/h		85.95		523.92

Through Movement Data				
Assigned Movement		2		4				8
Mvmt. Sat Flow, veh/h		5382.21		491.18				767.82

Right-Turn Movement Data				
Assigned Movement		12		14				18
Mvmt. Sat Flow, veh/h		98.41		0.00				930.69

Left Lane Group Data								
Assigned Movement	0	5	0	7	0	0	0	0
Lane Assignment		L+T		L+T				
Lanes in Group	0	1	0	1	0	0	0	0
Group Volume (v), veh/h	0.0	976.5	0.0	66.7	0.0	0.0	0.0	0.0
Group Sat. Flow (s), veh/h/ln	0.0	1858.4	0.0	1015.1	0.0	0.0	0.0	0.0
Queue Serve Time (g_s), s	0.0	28.7	0.0	4.3	0.0	0.0	0.0	0.0
Cycle Queue Clear Time (g_c), s	0.0	28.7	0.0	13.7	0.0	0.0	0.0	0.0

Perm LT Sat Flow Rate (s_l), veh/h/ln	0.0	0.0	0.0	761.4	0.0	0.0	0.0	0.0
Shared LT Sat Flow (s_sh), veh/h/ln	0.0	0.0	0.0	771.4	0.0	0.0	0.0	0.0
Perm LT Eff. Green (g_p), s	0.0	0.0	0.0	15.9	0.0	0.0	0.0	0.0
Perm LT Serve Time (g_u), s	0.0	0.0	0.0	6.6	0.0	0.0	0.0	0.0
Perm LT Que Serve Time (g_ps), s	0.0	0.0	0.0	4.3	0.0	0.0	0.0	0.0
Time to First Blk (g_f), s	0.0	0.0	0.0	1.9	0.0	0.0	0.0	15.9
Serve Time pre Blk (g_fs), s	0.0	0.0	0.0	1.9	0.0	0.0	0.0	0.0
Proportion LT Inside Lane (P_L)	0.000	0.046	0.000	0.516	0.000	0.000	0.000	0.000
Lane Group Capacity (c), veh/h	0.0	1627.7	0.0	103.6	0.0	0.0	0.0	0.0
Volume-to-Capacity Ratio (X)	0.000	0.600	0.000	0.644	0.000	0.000	0.000	0.000
Available Capacity (c_a), veh/h	0.0	1627.7	0.0	159.2	0.0	0.0	0.0	0.0
Upstream Filter Factor (I)	0.000	1.000	0.000	1.000	0.000	0.000	0.000	0.000
Uniform Delay (d1), s/veh	0.0	3.4	0.0	95.0	0.0	0.0	0.0	0.0
Incremental Delay (d2), s/veh	0.0	1.6	0.0	6.5	0.0	0.0	0.0	0.0
Initial Queue Delay (d3), s/veh	0.0	0.0	0.0	0.0	0.0	0.0	0.0	0.0
Control Delay (d), s/veh	0.0	5.0	0.0	101.5	0.0	0.0	0.0	0.0
First-Term Queue (Q1), veh/ln	0.0	8.9	0.0	3.8	0.0	0.0	0.0	0.0
Second-Term Queue (Q2), veh/ln	0.0	0.7	0.0	0.2	0.0	0.0	0.0	0.0
Third-Term Queue (Q3), veh/ln	0.0	0.0	0.0	0.0	0.0	0.0	0.0	0.0
Percentile bk-of-que factor (f_B%)	0.000	1.000	0.000	1.000	0.000	0.000	0.000	0.000
Percentile Back of Queue (Q%), veh/ln	0.0	9.6	0.0	3.9	0.0	0.0	0.0	0.0
Percentile Storage Ratio (RQ%)	0.00	0.45	0.00	0.93	0.00	0.00	0.00	0.00
Initial Queue (Qb), veh	0.0	0.0	0.0	0.0	0.0	0.0	0.0	0.0
Final (Residual) Queue (Qe), veh	0.0	0.0	0.0	0.0	0.0	0.0	0.0	0.0
Saturated Delay (ds), s/veh	0.0	0.0	0.0	0.0	0.0	0.0	0.0	0.0
Saturated Queue (Qs), veh	0.0	0.0	0.0	0.0	0.0	0.0	0.0	0.0
Saturated Capacity (cs), veh/h	0.0	0.0	0.0	0.0	0.0	0.0	0.0	0.0
Initial Queue Clear Time (tc), h	0.0	0.0	0.0	0.0	0.0	0.0	0.0	0.0
Middle Lane Group Data								
Assigned Movement	0	2	0	4	0	0	0	8
Lane Assignment		T						
Lanes in Group	0	1	0	0	0	0	0	0
Group Volume (v), veh/h	0.0	889.0	0.0	0.0	0.0	0.0	0.0	0.0
Group Sat. Flow (s), veh/h/ln	0.0	1862.7	0.0	0.0	0.0	0.0	0.0	0.0
Queue Serve Time (g_s), s	0.0	23.7	0.0	0.0	0.0	0.0	0.0	0.0
Cycle Queue Clear Time (g_c), s	0.0	23.7	0.0	0.0	0.0	0.0	0.0	0.0
Lane Group Capacity (c), veh/h	0.0	1631.4	0.0	0.0	0.0	0.0	0.0	0.0
Volume-to-Capacity Ratio (X)	0.000	0.545	0.000	0.000	0.000	0.000	0.000	0.000
Available Capacity (c_a), veh/h	0.0	1631.4	0.0	0.0	0.0	0.0	0.0	0.0
Upstream Filter Factor (I)	0.000	1.000	0.000	0.000	0.000	0.000	0.000	0.000
Uniform Delay (d1), s/veh	0.0	3.1	0.0	0.0	0.0	0.0	0.0	0.0
Incremental Delay (d2), s/veh	0.0	1.3	0.0	0.0	0.0	0.0	0.0	0.0
Initial Queue Delay (d3), s/veh	0.0	0.0	0.0	0.0	0.0	0.0	0.0	0.0
Control Delay (d), s/veh	0.0	4.4	0.0	0.0	0.0	0.0	0.0	0.0
First-Term Queue (Q1), veh/ln	0.0	7.4	0.0	0.0	0.0	0.0	0.0	0.0
Second-Term Queue (Q2), veh/ln	0.0	0.6	0.0	0.0	0.0	0.0	0.0	0.0
Third-Term Queue (Q3), veh/ln	0.0	0.0	0.0	0.0	0.0	0.0	0.0	0.0
Percentile bk-of-que factor (f_B%)	0.000	1.000	0.000	1.000	0.000	0.000	0.000	1.000
Percentile Back of Queue (Q%), veh/ln	0.0	7.9	0.0	0.0	0.0	0.0	0.0	0.0
Percentile Storage Ratio (RQ%)	0.00	0.37	0.00	0.00	0.00	0.00	0.00	0.00

Initial Queue (Qb), veh	0.0	0.0	0.0	0.0	0.0	0.0	0.0	0.0
Final (Residual) Queue (Qe), veh	0.0	0.0	0.0	0.0	0.0	0.0	0.0	0.0
Saturated Delay (ds), s/veh	0.0	0.0	0.0	0.0	0.0	0.0	0.0	0.0
Saturated Queue (Qs), veh	0.0	0.0	0.0	0.0	0.0	0.0	0.0	0.0
Saturated Capacity (cs), veh/h	0.0	0.0	0.0	0.0	0.0	0.0	0.0	0.0
Initial Queue Clear Time (tc), h	0.0	0.0	0.0	0.0	0.0	0.0	0.0	0.0
Right Lane Group Data								
Assigned Movement	0	12	0	14	0	0	0	18
Lane Assignment		T+R						T+R
Lanes in Group	0	1	0	0	0	0	0	1
Group Volume (v), veh/h	0.0	887.2	0.0	0.0	0.0	0.0	0.0	78.5
Group Sat. Flow (s), veh/h/ln	0.0	1845.4	0.0	0.0	0.0	0.0	0.0	1698.5
Queue Serve Time (g_s), s	0.0	24.0	0.0	0.0	0.0	0.0	0.0	9.4
Cycle Queue Clear Time (g_c), s	0.0	24.0	0.0	0.0	0.0	0.0	0.0	9.4
Prot RT Sat Flow Rate (s_R), veh/h/ln	0.0	0.0	0.0	0.0	0.0	0.0	0.0	0.0
Prot RT Eff. Green (g_R), s	0.0	0.0	0.0	0.0	0.0	0.0	0.0	0.0
Proportion RT Outside Lane (P_R)	0.000	0.053	0.000	0.000	0.000	0.000	0.000	0.548
Lane Group Capacity (c), veh/h	0.0	1616.2	0.0	0.0	0.0	0.0	0.0	129.6
Volume-to-Capacity Ratio (X)	0.000	0.549	0.000	0.000	0.000	0.000	0.000	0.605
Available Capacity (c_a), veh/h	0.0	1616.2	0.0	0.0	0.0	0.0	0.0	219.5
Upstream Filter Factor (I)	0.000	1.000	0.000	0.000	0.000	0.000	0.000	1.000
Uniform Delay (d1), s/veh	0.0	3.1	0.0	0.0	0.0	0.0	0.0	93.5
Incremental Delay (d2), s/veh	0.0	1.3	0.0	0.0	0.0	0.0	0.0	4.5
Initial Queue Delay (d3), s/veh	0.0	0.0	0.0	0.0	0.0	0.0	0.0	0.0
Control Delay (d), s/veh	0.0	4.4	0.0	0.0	0.0	0.0	0.0	97.9
First-Term Queue (Q1), veh/ln	0.0	7.4	0.0	0.0	0.0	0.0	0.0	4.2
Second-Term Queue (Q2), veh/ln	0.0	0.6	0.0	0.0	0.0	0.0	0.0	0.2
Third-Term Queue (Q3), veh/ln	0.0	0.0	0.0	0.0	0.0	0.0	0.0	0.0
Percentile bk-of-que factor (f_B%)	0.000	1.000	0.000	1.000	0.000	0.000	0.000	1.000
Percentile Back of Queue (Q%), veh/ln	0.0	8.0	0.0	0.0	0.0	0.0	0.0	4.3
Percentile Storage Ratio (RQ%)	0.00	0.37	0.00	0.00	0.00	0.00	0.00	0.49
Initial Queue (Qb), veh	0.0	0.0	0.0	0.0	0.0	0.0	0.0	0.0
Final (Residual) Queue (Qe), veh	0.0	0.0	0.0	0.0	0.0	0.0	0.0	0.0
Saturated Delay (ds), s/veh	0.0	0.0	0.0	0.0	0.0	0.0	0.0	0.0
Saturated Queue (Qs), veh	0.0	0.0	0.0	0.0	0.0	0.0	0.0	0.0
Saturated Capacity (cs), veh/h	0.0	0.0	0.0	0.0	0.0	0.0	0.0	0.0
Initial Queue Clear Time (tc), h	0.0	0.0	0.0	0.0	0.0	0.0	0.0	0.0
Intersection Summary								
HCM Average Control Delay		9.4						
HCM Level of Service		A						

Lane Group	EBT	WBT	NET
Lane Group Flow (vph)	43	179	2903
v/c Ratio	0.18	0.70	0.74
Control Delay	41.6	58.0	8.7
Queue Delay	0.0	0.0	1.6
Total Delay	41.6	58.0	10.3
Queue Length 50th (ft)	26	114	334
Queue Length 95th (ft)	59	188	453
Internal Link Dist (ft)	164	208	477
Turn Bay Length (ft)			
Base Capacity (vph)	303	319	3917
Starvation Cap Reductn	0	0	776
Spillback Cap Reductn	0	0	0
Storage Cap Reductn	0	0	0
Reduced v/c Ratio	0.14	0.56	0.92

Intersection Summary

Movement	EBL	EBT	EBR	WBL	WBT	WBR	NEL	NET	NER	SWL	SWT	SWR
Lane Configurations												
Volume (vph)	6	33	0	0	136	27	6	2614	21	0	0	0
Ideal Flow (vphpl)	1900	1900	1900	1900	1900	1900	1900	1900	1900	1900	1900	1900
Total Lost time (s)		5.0			5.0			5.0				
Lane Util. Factor		1.00			1.00			0.91				
Frt		1.00			0.98			1.00				
Flt Protected		0.99			1.00			1.00				
Satd. Flow (prot)		1848			1821			5079				
Flt Permitted		0.94			1.00			1.00				
Satd. Flow (perm)		1753			1821			5079				
Peak-hour factor, PHF	0.91	0.91	0.91	0.91	0.91	0.91	0.91	0.91	0.91	0.91	0.91	0.91
Adj. Flow (vph)	7	36	0	0	149	30	7	2873	23	0	0	0
RTOR Reduction (vph)	0	0	0	0	4	0	0	1	0	0	0	0
Lane Group Flow (vph)	0	43	0	0	175	0	0	2902	0	0	0	0
Turn Type	Perm	NA			NA		Perm	NA				
Protected Phases		4			8			2				
Permitted Phases	4						2					
Actuated Green, G (s)		15.2			15.2			84.9				
Effective Green, g (s)		15.2			15.2			84.9				
Actuated g/C Ratio		0.14			0.14			0.77				
Clearance Time (s)		5.0			5.0			5.0				
Vehicle Extension (s)		3.0			3.0			3.0				
Lane Grp Cap (vph)		242			251			3917				
v/s Ratio Prot					c0.10							
v/s Ratio Perm		0.02						0.57				
v/c Ratio		0.18			0.70			0.74				
Uniform Delay, d1		41.9			45.2			6.7				
Progression Factor		1.00			1.00			1.00				
Incremental Delay, d2		0.4			8.1			1.3				
Delay (s)		42.3			53.4			8.0				
Level of Service		D			D			A				
Approach Delay (s)		42.3			53.4			8.0			0.0	
Approach LOS		D			D			A			A	

Intersection Summary			
HCM Average Control Delay	11.1	HCM Level of Service	B
HCM Volume to Capacity ratio	0.73		
Actuated Cycle Length (s)	110.1	Sum of lost time (s)	10.0
Intersection Capacity Utilization	68.2%	ICU Level of Service	C
Analysis Period (min)	15		
c Critical Lane Group			

Movement	EBL	EBT	EBR	WBL	WBT	WBR	NEL	NET	NER	SWL	SWT	SWR
Lane Configurations												
Volume (vph)	6	33	0	0	136	27	6	2614	21	0	0	0
Movement Number	7	4	14	3	8	18	5	2	12	1	6	16
Initial Queue, veh	0	0	0	0	0	0	0	0	0	0	0	0
Ped-Bike Adj. Factor (A_pbT)	1.00		1.00	1.00		1.00	1.00		1.00	1.00		1.00
Parking, Bus Adj. Factors	1.00	1.00	1.00	1.00	1.00	1.00	1.00	1.00	1.00	1.00	1.00	1.00
Adj. Sat. Flow Rate, veh/h/ln	1863	1863	1900	1900	1863	1863	1863	1863	1863	1900	1900	1900
Lanes	0	1	0	0	1	0	0	3	0	0	0	0
Lane Assignment												
Capacity, veh/h	53	198	0	0	180	36	35	3704	30	0	0	0
Proportion Arriving On Green	0.12	0.12	0.00	0.00	0.12	0.12	0.78	0.78	0.78	0.00	0.00	0.00
Movement Delay, s/veh	41.3	0.0	0.0	0.0	0.0	54.3	18.9	10.7	10.8	0.0	0.0	0.0
Movement LOS	D					D	B	B	B			
Approach Volume, veh/h		43			179			2902			0	
Approach Delay, s/veh		41.3			54.3			13.1			0.0	
Approach LOS		D			D			B				

Timer:	1	2	3	4	5	6	7	8
Assigned Phase		2		4				8
Case No		8.0		8.0				8.0
Phase Duration (G+Y+Rc), s		86.00		17.35				17.35
Change Period (Y+Rc), s		5.00		5.00				5.00
Max. Allowable Headway (MAH), s		3.91		3.97				3.97
Maximum Green Setting (Gmax), s		81.00		19.00				19.00
Max. Queue Clearance Time (g_c+I1), s		83.00		4.14				12.00
Green Extension Time (g_e), s		0.00		0.57				0.37
Probability of Phase Call (p_c)		1.000		0.998				0.998
Probability of Max Out (p_x)		1.000		0.000				0.119

Left-Turn Movement Data				
Assigned Movement		5		7
Mvmt. Sat Flow, veh/h		10.84		271.00

Through Movement Data				
Assigned Movement		2		4				8
Mvmt. Sat Flow, veh/h		4714.61		1490.49				1510.05

Right-Turn Movement Data				
Assigned Movement		12		14				18
Mvmt. Sat Flow, veh/h		37.78		0.00				299.79

Left Lane Group Data								
Assigned Movement	0	5	0	7	0	0	0	0
Lane Assignment		L+T		L+T				
Lanes in Group	0	1	0	1	0	0	0	0
Group Volume (v), veh/h	0.0	839.5	0.0	42.9	0.0	0.0	0.0	0.0
Group Sat. Flow (s), veh/h/ln	0.0	1379.7	0.0	1761.5	0.0	0.0	0.0	0.0
Queue Serve Time (g_s), s	0.0	0.0	0.0	0.0	0.0	0.0	0.0	0.0
Cycle Queue Clear Time (g_c), s	0.0	81.0	0.0	2.1	0.0	0.0	0.0	0.0

Perm LT Sat Flow Rate (s_l), veh/h/ln	0.0	800.0	0.0	713.8	0.0	0.0	0.0	0.0
Shared LT Sat Flow (s_sh), veh/h/ln	0.0	0.0	0.0	1740.0	0.0	0.0	0.0	0.0
Perm LT Eff. Green (g_p), s	0.0	81.0	0.0	12.3	0.0	0.0	0.0	0.0
Perm LT Serve Time (g_u), s	0.0	0.0	0.0	2.4	0.0	0.0	0.0	0.0
Perm LT Que Serve Time (g_ps), s	0.0	0.0	0.0	0.0	0.0	0.0	0.0	0.0
Time to First Blk (g_f), s	0.0	60.0	0.0	7.1	0.0	0.0	0.0	12.3
Serve Time pre Blk (g_fs), s	0.0	32.0	0.0	2.1	0.0	0.0	0.0	0.0
Proportion LT Inside Lane (P_L)	0.000	0.008	0.000	0.154	0.000	0.000	0.000	0.000
Lane Group Capacity (c), veh/h	0.0	1116.5	0.0	250.6	0.0	0.0	0.0	0.0
Volume-to-Capacity Ratio (X)	0.000	0.752	0.000	0.171	0.000	0.000	0.000	0.000
Available Capacity (c_a), veh/h	0.0	1116.5	0.0	346.1	0.0	0.0	0.0	0.0
Upstream Filter Factor (I)	0.000	1.000	0.000	1.000	0.000	0.000	0.000	0.000
Uniform Delay (d1), s/veh	0.0	14.2	0.0	41.0	0.0	0.0	0.0	0.0
Incremental Delay (d2), s/veh	0.0	4.7	0.0	0.3	0.0	0.0	0.0	0.0
Initial Queue Delay (d3), s/veh	0.0	0.0	0.0	0.0	0.0	0.0	0.0	0.0
Control Delay (d), s/veh	0.0	18.9	0.0	41.3	0.0	0.0	0.0	0.0
First-Term Queue (Q1), veh/ln	0.0	12.2	0.0	1.0	0.0	0.0	0.0	0.0
Second-Term Queue (Q2), veh/ln	0.0	1.5	0.0	0.0	0.0	0.0	0.0	0.0
Third-Term Queue (Q3), veh/ln	0.0	0.0	0.0	0.0	0.0	0.0	0.0	0.0
Percentile bk-of-que factor (f_B%)	0.000	1.000	0.000	1.000	0.000	0.000	0.000	0.000
Percentile Back of Queue (Q%), veh/ln	0.0	13.6	0.0	1.0	0.0	0.0	0.0	0.0
Percentile Storage Ratio (RQ%)	0.00	0.72	0.00	0.12	0.00	0.00	0.00	0.00
Initial Queue (Qb), veh	0.0	0.0	0.0	0.0	0.0	0.0	0.0	0.0
Final (Residual) Queue (Qe), veh	0.0	0.0	0.0	0.0	0.0	0.0	0.0	0.0
Saturated Delay (ds), s/veh	0.0	0.0	0.0	0.0	0.0	0.0	0.0	0.0
Saturated Queue (Qs), veh	0.0	0.0	0.0	0.0	0.0	0.0	0.0	0.0
Saturated Capacity (cs), veh/h	0.0	0.0	0.0	0.0	0.0	0.0	0.0	0.0
Initial Queue Clear Time (tc), h	0.0	0.0	0.0	0.0	0.0	0.0	0.0	0.0
Middle Lane Group Data								
Assigned Movement	0	2	0	4	0	0	0	8
Lane Assignment		T						
Lanes in Group	0	1	0	0	0	0	0	0
Group Volume (v), veh/h	0.0	1031.4	0.0	0.0	0.0	0.0	0.0	0.0
Group Sat. Flow (s), veh/h/ln	0.0	1695.1	0.0	0.0	0.0	0.0	0.0	0.0
Queue Serve Time (g_s), s	0.0	34.7	0.0	0.0	0.0	0.0	0.0	0.0
Cycle Queue Clear Time (g_c), s	0.0	34.7	0.0	0.0	0.0	0.0	0.0	0.0
Lane Group Capacity (c), veh/h	0.0	1328.6	0.0	0.0	0.0	0.0	0.0	0.0
Volume-to-Capacity Ratio (X)	0.000	0.776	0.000	0.000	0.000	0.000	0.000	0.000
Available Capacity (c_a), veh/h	0.0	1328.6	0.0	0.0	0.0	0.0	0.0	0.0
Upstream Filter Factor (I)	0.000	1.000	0.000	0.000	0.000	0.000	0.000	0.000
Uniform Delay (d1), s/veh	0.0	6.2	0.0	0.0	0.0	0.0	0.0	0.0
Incremental Delay (d2), s/veh	0.0	4.5	0.0	0.0	0.0	0.0	0.0	0.0
Initial Queue Delay (d3), s/veh	0.0	0.0	0.0	0.0	0.0	0.0	0.0	0.0
Control Delay (d), s/veh	0.0	10.7	0.0	0.0	0.0	0.0	0.0	0.0
First-Term Queue (Q1), veh/ln	0.0	8.8	0.0	0.0	0.0	0.0	0.0	0.0
Second-Term Queue (Q2), veh/ln	0.0	1.7	0.0	0.0	0.0	0.0	0.0	0.0
Third-Term Queue (Q3), veh/ln	0.0	0.0	0.0	0.0	0.0	0.0	0.0	0.0
Percentile bk-of-que factor (f_B%)	0.000	1.000	0.000	1.000	0.000	0.000	0.000	1.000
Percentile Back of Queue (Q%), veh/ln	0.0	10.4	0.0	0.0	0.0	0.0	0.0	0.0
Percentile Storage Ratio (RQ%)	0.00	0.55	0.00	0.00	0.00	0.00	0.00	0.00

Initial Queue (Qb), veh	0.0	0.0	0.0	0.0	0.0	0.0	0.0	0.0
Final (Residual) Queue (Qe), veh	0.0	0.0	0.0	0.0	0.0	0.0	0.0	0.0
Saturated Delay (ds), s/veh	0.0	0.0	0.0	0.0	0.0	0.0	0.0	0.0
Saturated Queue (Qs), veh	0.0	0.0	0.0	0.0	0.0	0.0	0.0	0.0
Saturated Capacity (cs), veh/h	0.0	0.0	0.0	0.0	0.0	0.0	0.0	0.0
Initial Queue Clear Time (tc), h	0.0	0.0	0.0	0.0	0.0	0.0	0.0	0.0
Right Lane Group Data								
Assigned Movement	0	12	0	14	0	0	0	18
Lane Assignment		T+R						T+R
Lanes in Group	0	1	0	0	0	0	0	1
Group Volume (v), veh/h	0.0	1031.3	0.0	0.0	0.0	0.0	0.0	179.1
Group Sat. Flow (s), veh/h/ln	0.0	1688.4	0.0	0.0	0.0	0.0	0.0	1809.8
Queue Serve Time (g_s), s	0.0	35.1	0.0	0.0	0.0	0.0	0.0	10.0
Cycle Queue Clear Time (g_c), s	0.0	35.1	0.0	0.0	0.0	0.0	0.0	10.0
Prot RT Sat Flow Rate (s_R), veh/h/ln	0.0	0.0	0.0	0.0	0.0	0.0	0.0	0.0
Prot RT Eff. Green (g_R), s	0.0	0.0	0.0	0.0	0.0	0.0	0.0	0.0
Proportion RT Outside Lane (P_R)	0.000	0.022	0.000	0.000	0.000	0.000	0.000	0.166
Lane Group Capacity (c), veh/h	0.0	1323.3	0.0	0.0	0.0	0.0	0.0	216.2
Volume-to-Capacity Ratio (X)	0.000	0.779	0.000	0.000	0.000	0.000	0.000	0.828
Available Capacity (c_a), veh/h	0.0	1323.3	0.0	0.0	0.0	0.0	0.0	332.7
Upstream Filter Factor (I)	0.000	1.000	0.000	0.000	0.000	0.000	0.000	1.000
Uniform Delay (d1), s/veh	0.0	6.2	0.0	0.0	0.0	0.0	0.0	44.5
Incremental Delay (d2), s/veh	0.0	4.6	0.0	0.0	0.0	0.0	0.0	9.8
Initial Queue Delay (d3), s/veh	0.0	0.0	0.0	0.0	0.0	0.0	0.0	0.0
Control Delay (d), s/veh	0.0	10.8	0.0	0.0	0.0	0.0	0.0	54.3
First-Term Queue (Q1), veh/ln	0.0	8.8	0.0	0.0	0.0	0.0	0.0	4.5
Second-Term Queue (Q2), veh/ln	0.0	1.7	0.0	0.0	0.0	0.0	0.0	0.6
Third-Term Queue (Q3), veh/ln	0.0	0.0	0.0	0.0	0.0	0.0	0.0	0.0
Percentile bk-of-que factor (f_B%)	0.000	1.000	0.000	1.000	0.000	0.000	0.000	1.000
Percentile Back of Queue (Q%), veh/ln	0.0	10.5	0.0	0.0	0.0	0.0	0.0	5.0
Percentile Storage Ratio (RQ%)	0.00	0.56	0.00	0.00	0.00	0.00	0.00	0.56
Initial Queue (Qb), veh	0.0	0.0	0.0	0.0	0.0	0.0	0.0	0.0
Final (Residual) Queue (Qe), veh	0.0	0.0	0.0	0.0	0.0	0.0	0.0	0.0
Saturated Delay (ds), s/veh	0.0	0.0	0.0	0.0	0.0	0.0	0.0	0.0
Saturated Queue (Qs), veh	0.0	0.0	0.0	0.0	0.0	0.0	0.0	0.0
Saturated Capacity (cs), veh/h	0.0	0.0	0.0	0.0	0.0	0.0	0.0	0.0
Initial Queue Clear Time (tc), h	0.0	0.0	0.0	0.0	0.0	0.0	0.0	0.0
Intersection Summary								
HCM Average Control Delay		15.8						
HCM Level of Service		B						

Movement	EBL	EBR	NBL	NBT	SBT	SBR
Lane Configurations						
Volume (veh/h)	40	21	18	304	288	14
Sign Control	Stop			Free	Free	
Grade	0%			0%	0%	
Peak Hour Factor	0.92	0.92	0.92	0.92	0.92	0.92
Hourly flow rate (vph)	43	23	20	330	313	15
Pedestrians						
Lane Width (ft)						
Walking Speed (ft/s)						
Percent Blockage						
Right turn flare (veh)						
Median type				None	None	
Median storage veh)						
Upstream signal (ft)				296		
pX, platoon unblocked						
vC, conflicting volume	690	321	328			
vC1, stage 1 conf vol						
vC2, stage 2 conf vol						
vCu, unblocked vol	690	321	328			
tC, single (s)	6.4	6.2	4.1			
tC, 2 stage (s)						
tF (s)	3.5	3.3	2.2			
p0 queue free %	89	97	98			
cM capacity (veh/h)	404	720	1231			

Direction, Lane #	EB 1	NB 1	SB 1
Volume Total	66	350	328
Volume Left	43	20	0
Volume Right	23	0	15
cSH	476	1231	1700
Volume to Capacity	0.14	0.02	0.19
Queue Length 95th (ft)	12	1	0
Control Delay (s)	13.8	0.6	0.0
Lane LOS	B	A	
Approach Delay (s)	13.8	0.6	0.0
Approach LOS	B		

Intersection Summary			
Average Delay	1.5		
Intersection Capacity Utilization	40.9%	ICU Level of Service	A
Analysis Period (min)	15		

Movement	EBL	EBR	NBL	NBT	SBT	SBR
Lane Configurations						
Volume (veh/h)	8	2	9	340	302	1
Sign Control	Stop			Free	Free	
Grade	0%			0%	0%	
Peak Hour Factor	0.92	0.92	0.92	0.92	0.92	0.92
Hourly flow rate (vph)	9	2	10	370	328	1
Pedestrians						
Lane Width (ft)						
Walking Speed (ft/s)						
Percent Blockage						
Right turn flare (veh)						
Median type				None	None	
Median storage veh)						
Upstream signal (ft)				581		
pX, platoon unblocked						
vC, conflicting volume	718	329	329			
vC1, stage 1 conf vol						
vC2, stage 2 conf vol						
vCu, unblocked vol	718	329	329			
tC, single (s)	6.4	6.2	4.1			
tC, 2 stage (s)						
tF (s)	3.5	3.3	2.2			
p0 queue free %	98	100	99			
cM capacity (veh/h)	393	713	1230			

Direction, Lane #	EB 1	NB 1	SB 1
Volume Total	11	379	329
Volume Left	9	10	0
Volume Right	2	0	1
cSH	431	1230	1700
Volume to Capacity	0.03	0.01	0.19
Queue Length 95th (ft)	2	1	0
Control Delay (s)	13.6	0.3	0.0
Lane LOS	B	A	
Approach Delay (s)	13.6	0.3	0.0
Approach LOS	B		

Intersection Summary			
Average Delay	0.4		
Intersection Capacity Utilization	35.1%	ICU Level of Service	A
Analysis Period (min)	15		

Movement	EBL	EBR	NBL	NBT	SBT	SBR
Lane Configurations						
Volume (veh/h)	20	18	29	310	262	3
Sign Control	Stop			Free	Free	
Grade	0%			0%	0%	
Peak Hour Factor	0.92	0.92	0.92	0.92	0.92	0.92
Hourly flow rate (vph)	22	20	32	337	285	3
Pedestrians						
Lane Width (ft)						
Walking Speed (ft/s)						
Percent Blockage						
Right turn flare (veh)						
Median type				None	None	
Median storage veh)						
Upstream signal (ft)				866		
pX, platoon unblocked						
vC, conflicting volume	686	286	288			
vC1, stage 1 conf vol						
vC2, stage 2 conf vol						
vCu, unblocked vol	686	286	288			
tC, single (s)	6.4	6.2	4.1			
tC, 2 stage (s)						
tF (s)	3.5	3.3	2.2			
p0 queue free %	95	97	98			
cM capacity (veh/h)	403	753	1274			

Direction, Lane #	EB 1	NB 1	SB 1
Volume Total	41	368	288
Volume Left	22	32	0
Volume Right	20	0	3
cSH	516	1274	1700
Volume to Capacity	0.08	0.02	0.17
Queue Length 95th (ft)	6	2	0
Control Delay (s)	12.6	0.9	0.0
Lane LOS	B	A	
Approach Delay (s)	12.6	0.9	0.0
Approach LOS	B		

Intersection Summary			
Average Delay	1.2		
Intersection Capacity Utilization	45.2%	ICU Level of Service	A
Analysis Period (min)	15		

Movement	EBL	EBR	NBL	NBT	SBT	SBR
Lane Configurations						
Volume (veh/h)	34	32	40	264	192	34
Sign Control	Stop			Free	Free	
Grade	0%			0%	0%	
Peak Hour Factor	0.92	0.92	0.92	0.92	0.92	0.92
Hourly flow rate (vph)	37	35	43	287	209	37
Pedestrians						
Lane Width (ft)						
Walking Speed (ft/s)						
Percent Blockage						
Right turn flare (veh)						
Median type				None	None	
Median storage veh)						
Upstream signal (ft)						
pX, platoon unblocked						
vC, conflicting volume	601	227	246			
vC1, stage 1 conf vol						
vC2, stage 2 conf vol						
vCu, unblocked vol	601	227	246			
tC, single (s)	6.4	6.2	4.1			
tC, 2 stage (s)						
tF (s)	3.5	3.3	2.2			
p0 queue free %	92	96	97			
cM capacity (veh/h)	448	812	1320			

Direction, Lane #	EB 1	NB 1	SB 1
Volume Total	72	330	246
Volume Left	37	43	0
Volume Right	35	0	37
cSH	572	1320	1700
Volume to Capacity	0.13	0.03	0.14
Queue Length 95th (ft)	11	3	0
Control Delay (s)	12.2	1.3	0.0
Lane LOS	B	A	
Approach Delay (s)	12.2	1.3	0.0
Approach LOS	B		

Intersection Summary			
Average Delay	2.0		
Intersection Capacity Utilization	42.1%	ICU Level of Service	A
Analysis Period (min)	15		

Movement	EBL	EBT	EBR	WBL	WBT	WBR	NBL	NBT	NBR	SBL	SBT	SBR
Lane Configurations												
Sign Control		Stop			Stop			Stop			Stop	
Volume (vph)	10	135	106	46	171	4	33	250	37	9	18	4
Peak Hour Factor	0.92	0.92	0.92	0.92	0.92	0.92	0.92	0.92	0.92	0.92	0.92	0.92
Hourly flow rate (vph)	11	147	115	50	186	4	36	272	40	10	20	4

Direction, Lane #	EB 1	WB 1	NB 1	SB 1
Volume Total (vph)	273	240	348	34
Volume Left (vph)	11	50	36	10
Volume Right (vph)	115	4	40	4
Hadj (s)	-0.21	0.06	-0.01	0.01
Departure Headway (s)	5.2	5.5	5.3	5.9
Degree Utilization, x	0.39	0.37	0.51	0.06
Capacity (veh/h)	648	612	634	502
Control Delay (s)	11.5	11.6	13.8	9.3
Approach Delay (s)	11.5	11.6	13.8	9.3
Approach LOS	B	B	B	A

Intersection Summary			
Delay	12.3		
HCM Level of Service	B		
Intersection Capacity Utilization	54.5%	ICU Level of Service	A
Analysis Period (min)	15		

EXECUTIVE SUMMARY

The purpose of this report is to document the results of the Traffic Impact Analysis for the DOWNTOWN REDEVELOMPENT of the "Village of Palmetto Bay", located between SW 174th Street and SW 184th Street along US-1 and SW 97th Avenue in Palmetto Bay, Florida. The proposed project consists of residential and retail/office land uses, to be built in three development phases occurring in 2025, 2035 and 2045. This traffic impact study analyzed the transportation corridor segments and intersections in accordance with the Village of Palmetto Bay requirements and approved methodology, which specified an analysis of existing conditions, future conditions without the downtown project (background traffic) and future conditions with the downtown project (total traffic).

Results of the existing intersection and segment analysis demonstrate that the intersections and segments operate above the adopted levels of service during the peak hours, with exception to:

- SW 97th Avenue at US-1/Evergreen Street (A.M. peak hour)
- US-1 at Wayne (A.M. and P.M. peak hours)
- US-1 at E Indigo Street (A.M., midday and P.M. peak hours)

The Village of Palmetto Bay staff recognizes the projected capacity challenges represented along 97th Avenue and has proposed construction of a parallel facility along SW 95th Avenue to alleviate congestion. Therefore, future analyses were performed both with the proposed SW 95th Avenue segment.

Results of the future background intersection and segment analysis **"without"** the proposed SW 95th Avenue demonstrate that the intersections and segments operate above the adopted levels of service during the peak hours, with exception to:

- SW 97th Avenue (2025, 2035 and 2045 - A.M. peak period)
- US-1 (2045 - A.M peak period)
- SW 97th Avenue at US-1/Evergreen Street (2025, 2035 and 2045 - A.M. peak period)
- US-1 at Wayne Avenue (2025, 2035 and 2045 - A.M. and P.M. peak periods)
- US-1 at E Indigo Street (2025, 2035 and 2045 - A.M., midday and P.M. peak periods)

Results of the future background intersection and segment analysis **"with"** the proposed SW 95th Avenue demonstrates that the intersections and segments operate above the adopted levels of service during the peak hours, with exception to:

- US-1 (2025, 2035 and 2045 - A.M. period)
- SW 97th Avenue at US-1/Evergreen Street (2045 - A.M. peak period)
- US-1 at Wayne Avenue (2025 - A.M. and P.M. peak periods) (2035, 2045 - A.M., midday and P.M. peak periods)
- US-1 at E Indigo Street (2025, 2035 and 2045 - A.M., midday and P.M. peak periods)
- SW 184th Street at SW 95th (2025, 2035 and 2045 - A.M. and P.M. peak periods)

As expected, in general delay times are reduced and level of service is improved along SW 97th Avenue and at each of the study intersections with the proposed SW 95th Avenue segment in the network.

Results of the future total traffic intersection and segment analysis with the proposed SW 95th Avenue demonstrates that the intersections and segments operate above the adopted levels of service during the peak hours, with exception to:

- US-1 (2045 - A.M peak period)
- SW 97th Avenue at US-1/ Evergreen Street (2025 and 2035 - A.M. peak period) (2045 - A.M. and P.M. peak periods).
- US-1 at Wayne (2025 - A.M. and P.M. peak periods) (2035 and 2045 – A.M., midday and P.M. peak periods)
- US-1 at E Indigo Street (2025, 2035 and 2045 - A.M., midday and P.M. peak periods)
- US-1 at SW 184 (2035 - A.M. and P.M. peak periods) (2045 - A.M., midday and P.M. peak periods)
- SW 184th Street at SW 95th Avenue (2025 -A.M. and P.M. peak periods) (2035 and 2045 - A.M., midday and P.M. peak periods)
- SW 184th Street at SW 97th Avenue (2045 - P.M. peak period)

To mitigate the impacts created by the additional project traffic, both network and intersection cycle lengths were optimized for future total traffic conditions along with geometric improvements, as follows:

1. US-1 at SW 184th Street
    a. Add EB thru, left-turn and right-turn lane
    b. Add WB thru and right-turn lane
    c. Add NB right-turn lane
    d. Add SB dual right-turn lane
2. US-1 at Evergreen/97th Avenue
    a. Add EB dual right-turn lanes
    b. Add NB left-turn, thru lane and free-flow right-turn lane
    c. Add SB thru lane
3. US-1 at Indigo Street
    a. Install signal
4. US-1 at Wayne Street
    a. Install signal
5. SW 184th Street at SW 95th Avenue
    a. Install signal
6. SW 184th Street at SW 97th Avenue
    a. Add EB and WB thru lane

After implementation of the improvements, the intersection level of service analysis for future total traffic conditions with intersection improvements showed that each of the intersections performed above the

adopted level of service standards, as compared to the future conditions without project traffic during the AM, midday and PM peak hour, with exception to:

- US-1 2045 – A.M. peak period)
- US-1 at SW 184th Street (2045 – A.M. peak period)

In conclusion, the results of this study demonstrate that in general the traffic generated by the proposed development project can be accommodated on the existing roadway network and levels of service expected without the project can be maintained upon the addition of project-generated traffic with negligible intersection improvements. However, it is recommended that the Village of Palmetto Bay coordinate with FDOT District Six and Miami Dade Public Works Division to further evaluate a long term improvement concepts at the US-1 at SW 184th intersection.

In addition, this study also suggest a series of improvements encouraging people travel to and from the project to use public transportation as well as promoting bicycling and walking, including:

- Installation of on-site bicycle racks or parking stations
- Provide transit information stations within the site including route schedules and maps
- Provide other transit-oriented amenities
- Design/construct the site in a bicycle/pedestrian - and transit-friendly fashion