17 pages Roos

UF

VILLAGE OF PALMETTO BAY
9705 E. HIBISCUS STREET
PALMETTO BAY, FLORIDA 33157
(305) 259-1250 Fax: (866) 927-5576

BUILDING & CAPITAL PROJECTSCTS
REQUEST FOR PUBLIC RECORDS

Requests are filled in accordance with the provisions of Chapters 119 and 257, Florida Statutes.

DATE: 07-02-18

NAME: Cesar Arbelaez

COMPANY:

ADDRESS:

PHONE: 770 374 0300 FAX:

EMAIL: argoquiz2014@HOTmail.com

Box 36

REQUEST (Attach additional page, if necessary): Copies of the following documents:

BLD-2011-0657 – BRP-2011-0087 – Box 36

copy of each Permit

-14401 SW 79 Ave

****

FOR USE BY VILLAGE STAFF ONLY TRACKING NO.: 2018-201

DATE FORWARDED: 7-3-18 ASSIGNED DEPT: Building

DATE REQUEST FILLED: 7/12/18 NUMBER OF COPIES: 64

ESTIMATED TIME (IF APPLICABLE): ESTIMATED COST:

HOW WAS REQUEST FILLED?

IF NOT FILLED, REASON:

BY: AB

17pages Roof
47

Village of Palmetto Bay Florida

PLANS PROCESSING

Expires 10/17/11

Process Number: BRF-2011-00087

Description of Work: RE-ROOF

Property Address: 14401 SW 79 AVE

Department	Date In	Date Out	Total Business Days	Approved	Denied	Comments
Zoning						
Building	04/12/11	4/15/11	3		✓	
VERIFIED NOAS JL	04/15/11	4/18/11	1	✓		
Structural						
Electrical						
Mechanical						
Plumbing						
Planning & Zoning						
Public Works						
						Verified OK
Final Signature	04/18/11	04/18/11	1	✓		
Code Enforcement Verification	04/18/11	04/18/11	1			
Pricing	04/18/11	4/20/11	2	✓		
Call for Pick up	04/20/11	04/20/11	1	✓		

Village of Palmetto Bay Permit Application

Department of Building & Capital Projects
9705 E. Hibiscus Street
Palmetto Bay, Florida 33157
Phone: (305) 259-1250 Fax: (305) 259-1291 Inspections: (305) 259-1253

04·12·11

GENERAL INFORMATION: Please read these instructions carefully before submitting the work for review

This application must be completed and signed by both the property owner and qualifier. Both of these signatures must be notarized. Please print legibly or type in order not to delay your application. For roofing permits, in addition to this permit you must also fill out a roofing permit application. Express permits require an additional fee and will only be accepted between the hours of 8:00 A.M. and 10:00 A.M., Monday through Friday. All other permits/plans must be dropped off before 4:30 p.m. for regular processing. During the processing of your application you may be asked to submit additional information. There may be additional permits and reviews required from other governmental agencies not affiliated with Palmetto Bay. Cust # 00021725

APPLICATION:

Clerk's Initials	Plan Process Number	Master Permit Number	Subsidiary Permit Number(s)	Expiration Date
JG	BRF·2011·0087			

Job Address: 14401 SW 79TH Avenue (Address) Unit number Miami (City) FL (State) 33158 (Zip Code)

Folio Number: 33-5022-031-0020

Lot: 2 Block: 8

Subdivision: Royal Harbor PB: 82 PG: 16

Current Use of Property: Residential

Proposed Use of Property: Primary Residence

Description of Work: Re-Roof Shingle

Zoning: Square Feet:

Tenant Information: Unit Number:

Linear Feet: Units: Stories: 1

Value of Proposed Work: 21,875 Est. Bldg. Value: 201K

Tax Assessed Value:

Flood Zone: Base Floor Elev.:

Homeowner's Association: No

I affirm that there ☐ are or ☐ are no restrictive covenants associated with the underlying property that would affect the pending application. Failure to disclose this information shall result in the immediate revocation of any type of permit or certificate of use/occupancy.

Check Permit Type		Check Permit Change		Check Type of Improvement			
Building		Change of Contractor		New Construction		Deck/Concrete flatwork	
Electrical		Permit Renewal		Exterior Alteration		Window Replacement	
Mechanical		Plan Revision		Interior Alteration		Shutters	
Plumbing		Permit Extension		Attached Addition		Garage Doors	
LPGX		Supplement		Detached Addition		Storage Shed	
Roofing	X	Re-inspection Fee		Repair		Railings	
Fence				Repair due to Fire		Stairs	
Sign				Demolish		Windows/Doors	
Public Works				Screen Enclosure		Roofing	
Other				Driveway		Re-Roof	
				Fence		Seal-cote	
				Pool		Other	

Issued 4/20/11 EJ

Architect Information	Engineer Information
Name:	Name:
License Number:	License Number:
Address:	Address:
Telephone Number:	Telephone Number:
Fax Number:	Fax Number:
Other:	Other:

Property Owner	Contractor
Name: ERIC BARDET	Company Name ATLAS ROOFING
Address: 14401 SW 79TH Ave Miami, FL 33158	Qualifier Javier Bencomo
Home Telephone:	License Number CCC1328901
Business Telephone: 305-395-8689	Address 13823 SW 124 Ave Rd Miami, FL
Other Telephone:	Telephone Number 305-733-7659
Fax Number:	Fax Number 305-971-1706
Does Property have Homestead Exemption	Phone Number for Pick Up 305-733-7659

Bond Company (if applicable)	Mortgage Lender
Name:	Name:
Address:	Address:
City: State: Zip	City: State: Zip

Classification Of Proposed Work

Residential ☒ Duplex ☐ Townhouse ☐ Multi Family ☐ Commercial ☐ Industrial ☐ Other ☐

Effective Code_____ Occupancy_____ Construction Type _____

Zoning: Variance Number: Remarks:

OWNER AFFIDAVIT

Application is hereby made to obtain a permit to do the work and installation as indicated. I certify that no work or installation has commenced prior to the issuance of a permit and that all work will be performed to meet the standards of all laws regulating construction in this jurisdiction. I understand that a separate permit must be secured for **ELECTRICAL, MECHANICAL, PLUMBING, SIGNS, WELLS, POOLS, ROOFING, SHUTTERS, WINDOWS, FURNACES, BOILERS, HEATERS, TANKS, FENCE, DRIVEWAYS and AIR CONDITIONERS, ETC.** In addition to the requirements of this permit, there may be additional restrictions found in the Public Records, and there may be additional permits required from other governmental entities.

I, the owner of the property, have disclosed all information related to any work that has been performed in the prior twelve months to the Building Division as part of this application. Further, I am fully aware that if the cumulative cost of work to my home or business under this and any other permit equals or exceeds fifty percent of the fair market value of the structure, the entire structure must meet the present federal flood criteria for finished floor elevation. I am also fully aware that if the cost of work to my home or business under this and any other permit equals or exceeds fifty per cent of the replacement cost of the structure, then the entire structure must conform to current code requirements of the Florida Building Code.

I, the owner of the property, understand that a permit application is subject to denial and a validated permit or permit card is subject to revocation or modification based upon applicable deeds, covenants, declarations, easements and any other legal restriction. By issuing a permit, the Village of Palmetto Bay makes no representation as to the existence or validity of any property restriction.

I, the owner of the property certify that all the foregoing information is accurate and that all work will be done in compliance with all applicable laws regulating construction and zoning.

WARNING TO OWNER: YOUR FAILURE TO RECORD A NOTICE OF COMMENCEMENT MAY RESULT IN YOUR PAYING TWICE FOR IMPROVMENTS TO YOUR PROPERTY. A NOTICE OF COMMENCEMENT MUST BE RECORDED AND POSTED ON THE JOB SITE BEFORE THE FIRST INSPECTION. IF YOU INTEND TO OBTAIN FINANCING, CONSULT WITH YOUR LENDER OR AN ATTORNEY BEFORE COMMENCING WORK OR RECORDING YOUR NOTICE OF COMMENCEMENT.

Signature of Owner

State of Florida, County of Miami-Dade

Sworn to (or affirmed) and subscribed before this 8 day of April, 2011.

by (print name) Erika Chaveco

Notary Name

Personally known ☐ or I.D.

Type of identification produced: Florida Drivers License

ERIKA CHAVECO
MY COMMISSION # DD969661
EXPIRES March 09, 2014
(407) 398-0153 FloridaNotaryService.com

Signature of Qualifier

State of Florida, County of Miami-Dade

Sworn to (or affirmed) and subscribed before this 8 day of April, 2011.

by (print name) Erika Chaveco

Notary Name

Personally known or I.D.

Type of identification produced:

ERIKA CHAVECO
MY COMMISSION # DD969661
EXPIRES March 09, 2014
(407) 398-0153 FloridaNotaryService.com

IMPORTANT NOTICES

- Do not begin work without receiving you validated permit and permit card. Applying for a permit does not grant you the right to commence construction. Construction can only occur during the hours of 7:00 a.m. to 7:00 p.m., Monday thru Saturday and from the hours of 9:00 a.m. to 6:00 p.m. on Sundays and Federal holidays.
- All construction sites must be maintained in a clean and orderly condition free from construction debris. Failure to do so will result in a fine and a suspension of inspections until said property is cleaned.
- Streets and neighboring properties shall be kept free from dirt and debris.
- Swales must be protected from damage by equipment or vehicles and sidewalks cannot be blocked.
- Portable Toilets for construction jobs require a separate permit. If toilet is not available the inspection will not be performed.
- Water cannot be discharged into the right of way or storm drains without the approval of the Public Works Department.
- No equipment or materials can be stored on the right of way; they must only be stored on your property.
- Florida Department of Health approval is required for applications involving Septic Tanks. Department of Environmental Resources Management (DERM) and /or Miami-Dade Water and Sewer Department approval is required for applications involving sewers and water. The tree section of the Department of Environmental Resources Management (DERM) approval is required on all landscape plans and on all tree removal applications.

CHECKLIST (OFFICE USE ONLY)

- ☐ OWNER-BUILDER FORM (Attached)
- ☐ FIRE DEPARTMENT APPROVAL (Commercial/multi (family only)
- ☐ CONCURRENCY (New Construction)
- ☐ PROOF OF OWNERSHIP (Attached)
- ☐ CONDO ASSOCIATION APPROVAL
- ☑ UPFRONT FEES AMOUNT: 89.25
- ☐ HEALTH DEPARTMENT APPROVAL (Septic/Sewer)
- ☐ IMPACT FEE (New Construction)
- ☐ SCHOOL REVIEW (New Construction)
- ☐ DERM REVIEW (New Construction/Additions/Tree Removal)
- ☐ PUBLIC WORKS
- ☑ PERMIT CLERK REVIEW By: TG
  - ☑ Complete Application
  - ☑ Current liability ins.
  - ☑ Worker's Comp.
  - ☑ Cont. Lic. Check
- ☐ OTHER (Specify and Attach)
- ☐ FLORIDA DEPARTMENT OF BUISNESS AND PROFESSIONAL REGULATION APPROVAL (RESTAURANTS)

PERMIT FEES (OFFICE USE ONLY)

Scanning Fees Small (1.85 per sheet)	46.25	**Art in Public Places**	
Scanning Fees Large (3.50 per sheet)		**Certificate of Use and Occupancy**	
Village of Palmetto Bay Permit Fees	560.00	**Concurrency Fee** (7.35%)	48.40
Miami-Dade County Fees (sq. ft. x $65//1000x0.60)		**Technology Fee** (6.3%)	39.03
	13.20	**Zoning Inspection Fee** (157.50 per application)	
Radon-Inspector State Educational Fund and DCA State fee	16.80	**Administration Fee**	S
Code Enforcement Fine		**Express Fee** (25.00)	
Certificate of Completion	S	**Public Works Fee**	
Construction Sign Fee		**Landscape Review Fee** (175.00 per hour)	
Roll-off Waste Container Fee (105.00 per container site)		**Special Review Fee** (89.25 per hour)	
Rework Fee		**Other**	

$ 634.43

PLAN REVIEWER APPROVAL AREA (OFFICE USE ONLY)

SECTION	REVIEWER APPROVAL'S NAME	APPROVAL DATE	REJECTED DATE NUMBER 1	REJECTED DATE NUMBER 2	REJECTED DATE NUMBER 3
COMMUNITY DEVELOPMENT					
ZONING					
ELECTRICAL					
MECHANICAL					
PLUMBING					
FIRE					
ROOFING					
PUBLIC WORKS					
PLANNING					
STRUCTURAL					
BUILDING	AK	4/18/11	AK 4/15/11		
BUILDING OFFICIAL					

REWORKS: A fee of **$105.50** may be charged for failure to make required corrections previously indicated. The fee shall be charged after the initial review plus one follow up review per trade. Please note that Florida Statutes 553.80 section 2(b) states "with respect to evaluation of design professionals documents, if a local government finds it necessary, in order to enforce compliance with the Florida Building Code and issue a permit, to reject design documents required by the code three or more times for failure to correct a code violation specifically noted in each rejection, including but not limited to egress, fire protection, structural stability, energy, accessibility, lighting, ventilation, electrical, mechanical, plumbing, and gas systems, or other requirements identified by rule of the Florida Building Commission adopted pursuant to Chapter 120, the local government shall impose, each time after third such review the plans are rejected for that code violation a fee of **four times the amount** of the proportion of the permit fee attributed to plans review".

ISSUING OFFICIAL

FINAL PLAN REVIEWED AND PREPARED FOR ISSUANCE BY: AK DATE: 4/18/11

CONDITIONS OF APPROVAL

PLAN TRACKING

Plans Checked out	Date	Clerk	Plans Checked in	Date	Clerk
Javier Benemo	04/15/11	[illegible]	JAVIER	04/15/11	[illegible]

PLEASE NOTE THAT THE RECEIPT OF AN APPLICATION AND /OR ANY ATTACHMENTS THERETO IS MERELY A MINISTERIAL ACTION. SUCH MINISTERIAL ACTION IS NOT AN APPROVAL OR ACCEPTANCE OF THE APPLICATION. PLEASE BE ADVISED THAT A MORATORIUM ORDINANCE IS PENDING, A COPY OF WHICH IS AVAILABLE FROM THE VILLAGE CLERK. DUE TO THE MORATORIUM ORDIANCE THAT IS PENDING, THE VILLAGE PUTS YOU ON NOTICE OF "ZONING IN PROGRESS"

Signed for by Applicant: Jaime Bernard

Date: 4-8-2011

Palmetto Bay Building Department
Comment Sheet

Department: BUILDING

Inspector: A. RAMOS

Date: 4/15/11

(1) COMPLETE SECTION 'C'

(2) PROVIDE BUILDING ASSESSED VALUE. TAX RECORDS.

Florida Building Code Edition 2007
High Velocity Hurricane Zone Uniform Permit Application Form

Section C (Low Sloped Roof System)

Fill in Specific Roof Assembly Components and Identify Manufacturer
(If a component is not used, identify as "NA")

System Manufacturer: Polyglass USA

NOA No.: 08-0726.06

Design Wind Pressures, From RAS 128 or Calculations:

Pmax1: -49.2 Pmax2: -82.6 Pmax3: -124.3

Max. Design Pressure, From the Specific NOA System: -52.5

Deck:
Type: 5/8 Plywood
Gauge/Thickness:
Slope: .5 MAX

Anchor/Base Sheet & No. of Ply(s):

Anchor/Base Sheet Fastener/Bonding Material:

Insulation Base Layer:

Base Insulation Size and Thickness:

Base Insulation Fastener/Bonding Material:

Top Insulation Layer:

Top Insulation Size and Thickness:

Top Insulation Fastener/Bonding Material:

Base Sheet(s) & No. of Ply(s): Glass Basesheet + (1) Ekstobase Sheet

Base Sheet Fastener/Bonding Material: 1 1/4" RS Nails + 1 5/8" Tin Caps

Ply Sheet(s) & No. of Ply(s): (1) ElastoFlex SA V

Ply Sheet Fastener/Bonding Material: Self Adhered

Top Ply: PolyFlex SA P FR

Top Ply Fastener/ Bonding Material: Self Adhered

Surfacing:

Fastener Spacing for Anchor/Base Sheet Attachment

Field: 8" oc @ Lap, # Rows 3 @ 8" oc

Perimeter: 6" oc @ Lap, # Rows 4 @ 6" oc

Corner: 6" oc @ Lap, # Rows 4 @ 6" oc

Number of Fasteners Per Insulation Board

Field N/A Perimeter N/A Corner N/A

Illustrate Components Noted and Details as Applicable:

Woodblocking, Gutter, Edge Termination, Stripping, Flashing, Continuous Cleat, Cant Strip, Base Flashing, Counter- Flashing, Coping, Etc.

Indicate: Mean Roof Height, Parapet Height, Height of Base Flashing, Component Material, Material Thickness, Fastener Type, Fastener Spacing or Submit Manufacturers Details that Comply with RAS 111 and Chapter 16.

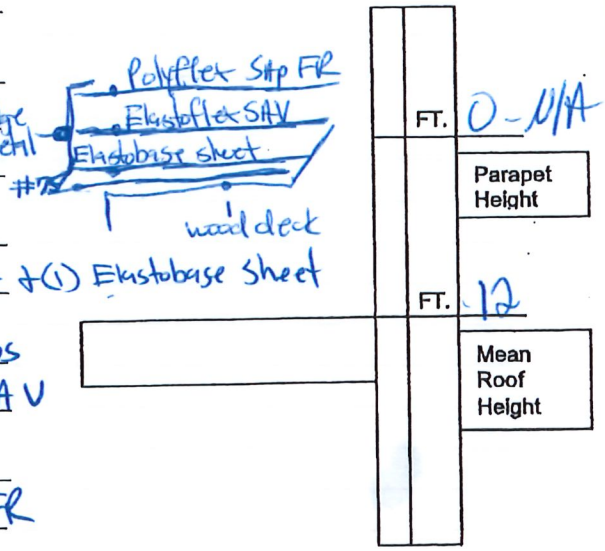

OWNER'S AFFIDAVIT OF EXEMPTION

ROOF TO WALL CONNECTION HURRICANE MITIGATION RETROFIT FOR EXISTING SITE-BUILT SINGLE FAMILY RESIDENTIAL STRUCTURES PURSUANT TO SECTION 553.844 F.S.

To: Village of Palmetto Bay
Department of Building & Capital Projects
9705 East Hibiscus Street
Palmetto Bay, FL 33157

Re: Owner's Name ERIC BARDET

Property Address 14401 SW 79 Avenue Miami, FL

Roofing Permit Number _____

Dear Building Official:

I ERIC BARDET certify that I am not required to retrofit the roof to wall connections of my building because:

☒ The just valuation for the structure for purposes of ad valorem taxation in less than $300,000.00.

☐ The building was constructed in compliance with the provisions of the Florida Building Code (FBC) or with the provisions of the 1994 edition of the South Florida Building Code (1994 SFBC).

Signature of Property Owner

ERIC BARDET
Print Name

STATE OF FLORIDA COUNTY OF MIAMI-DADE

Sworn to and subscribed before me this 7th day of April, 20 11,

(SEAL)

ERIKA CHAVECO
MY COMMISSION # DD969661
EXPIRES March 09, 2014
FloridaNotaryService.com
(407) 398-0153

___ Personally Known
✓ or Produced Identification Florida Drivers License

When the just valuation of the structure for purposes of ad valorem taxation is equal to or more than $300,000.00, and the building was not constructed in compliance with the FBC nor with 1994 SFBC, and affidavit of Roof to Wall Connection Hurricane Mitigation Retrofit must be provided.

LOW SLOPE SA MEMBRANE

THIS ASSEMBLY CAN BE INSTALLED ON A ROOF DECK WITH A MAXIMUM SLOPE OF .5/12

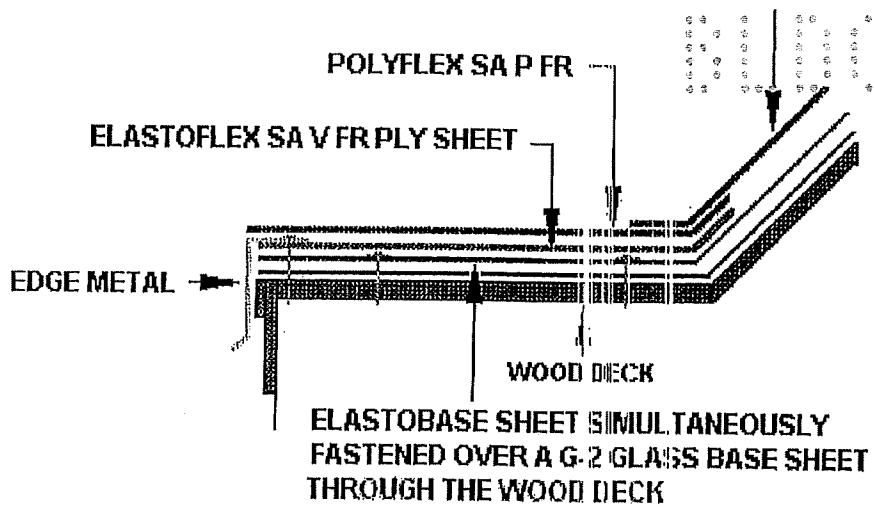

Roof Mean Height: 12 Feet

Roof Slope: .5/12 (Maximum)

Drip Edge:

3" Face - 26 Gauge Galvanized Metal

Continuous Cleat:

n/a

Surfacing:

n/a

Membrane (Top Ply):

Polyglass Polyflex SA-P FR

Inter Ply Sheet:

Polyglass Elastoflex SA-V FR

Base Sheet:

Elastobase Sheet Simultaneously Fastened Through a G-2 Glass Base Sheet

Deck Type:

5/8" Plywood

Florida Building Code Edition 2007
High Velocity Hurricane Zone Uniform Permit Application Form

Section A (General Information)

Master Permit No. _____ **Process No.** _____

Contractor's Name ATLAS ROOFING INC.

Job Address 14401 SW 79th Ave Miami, FL 33158

ROOF CATEGORY

- ☑ Low Slope
- ☑ Asphaltic Shingles
- ☐ Mechanically Fastened Tile
- ☐ Metal Panel/Shingles
- ☐ Mortar/Adhesive Set Tile
- ☐ Wood Shingles/Shakes
- ☐ Prescriptive BUR-RAS 150

Are there Gas Vent Stacks? Yes☐ No☐
Type: Natural☐ LPGX☐

ROOF TYPE

☐ New Roof ☑ Re-Roofing ☐ Recovering ☐ Repair ☐ Maintenance

ROOF SYSTEM INFORMATION

Low Slope Roof Area (SF)	Steep Sloped Roof Area (SF)	Total (SF)
1,200	2,800	4,000

Section B (Roof Plan)

Sketch Roof Plan: **Illustrate all levels and sections, roof drains, scuppers, overflow scuppers and overflow drains. Include dimensions of sections and levels, clearly identify dimensions of elevated pressure zones and location of parapets.**

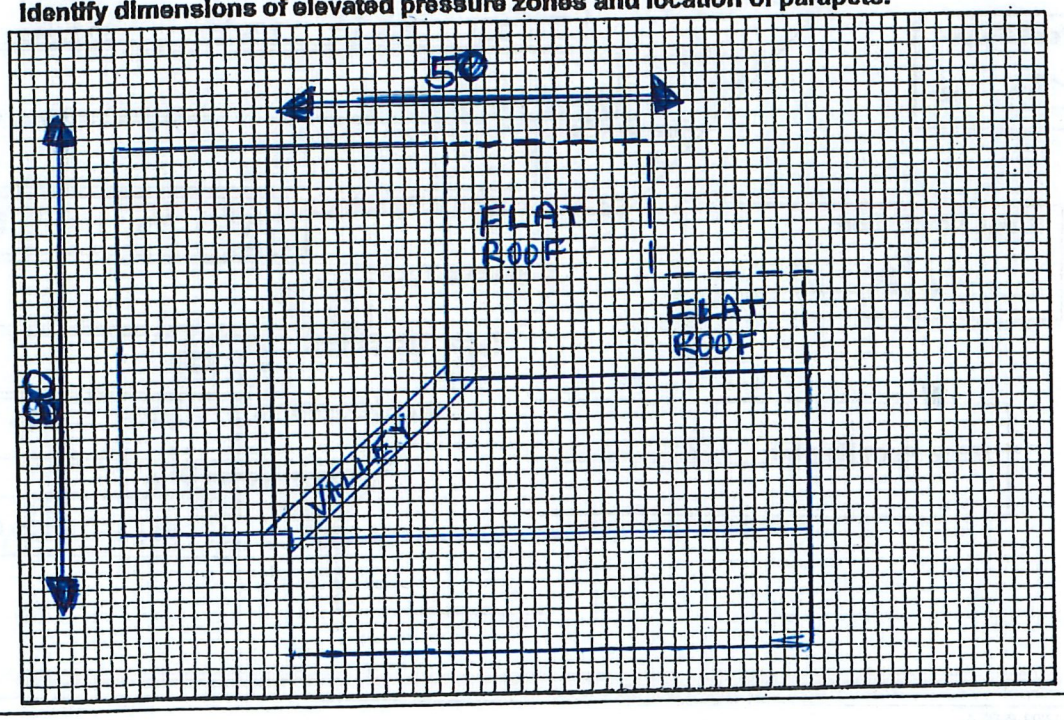

Florida Building Code Edition 2007
High Velocity Hurricane Zone Uniform Permit Application Form

Section D (Steep Sloped Roof System)

Roof System Manufacturer: Tamko Roofing Products

Notice of Acceptance Number: 07-0111.04

Minimum Design Wind Pressures, If Applicable (From RAS 127 or Calculations):

P1: 45.1 **P2:** 78.6 **P3:** 116.2

Maximum Design Pressure (From the NOA Specific System): _____

Method of tile attachment: _____

Steep Sloped Roof System Description

Deck Type: 5/8 Plywood

Type Underlayment: #30 Felt Astm D226

Insulation: N/A

Fire Barrier: N/A

Fastener Type & Spacing: 1 1/4" RS Nails & 1 5/8" Tin-caps

Adhesive Type: N/A

Type Cap Sheet: N/A

Roof Covering: Tamko Glass Seal

Type & Size Drip Edge: 3" face 26 gagge

Roof Slope: 3 : 12

Ridge Ventilation? N/A

Mean Roof Height: 12

Florida Building Code Edition 2007
High Velocity Hurricane Zone Uniform Permit Application Form

INSTRUCTION PAGE

COMPLETE THE NECESSARY SECTIONS OF THE UNIFORM ROOFING PERMIT APPLICATION FORM AND ATTACH THE REQUIRED DOCUMENTS AS NOTED BELOW:

Roof System	Required Sections of the Permit Application Form	Attachments Required See List Below
Low Slope Application	A,B,C	1,2,3,4,5,6,7
Prescriptive BUR-RAS 150	A,B,C	4,5,6,7
Asphaltic Shingles	A,B,D	1,2,4,5,6,7
Concrete or Clay Tile	A,B,D,E	1.2.3.4.5,6,7
Metal Roofs	A,B,D	1,2,3,4,5,6,7
Wood Shingles and Shakes	A,B,D	1,2,4,5,6,7
Other	As Applicable	1,2,3,4,5,6,7

ATTACHMENTS REQUIRED:

1.	Fire Directory Listing Page
2.	From Notice of Acceptance: Front Page Specific System Description Specific System Limitations General Limitations Applicable Detail Drawings
3.	Design Calculations per Chapter 16, or If Applicable, RAS 127 or RAS 128
4.	Other Component Notice of Acceptances
5.	Municipal Permit Application
6.	Owners Notification for Roofing Considerations (Re-Roofing Only)
7.	Any Required Roof Testing/Calculation Documentation

SECTION 1524

HIGH VELOCITY HURRICANE ZONES– REQUIRED OWNERS NOTIFICATION FOR ROOFING CONSIDERATIONS

1524.1 Scope. As it pertains to this section, it is the responsibility of the roofing contractor to provide the owner with the required roofing permit, and to explain to the owner the content of this section. The provisions of Chapter 15 of the ***Florida Building Code, Building*** govern the minimum requirements and standards of the industry for roofing system installations. Additionally, the following items should be addressed as part of the agreement between the owner and the contractor. The owner's initial in the designated space indicates that the item has been explained.

EB **1. Aesthetics-workmanship:** The workmanship provisions of Chapter 15 (High Velocity Hurricane Zone) are for the purpose of providing that the roofing system meets the wind resistance and water intrusion performance standards. Aesthetics (appearance) are not a consideration with respect to workmanship provisions. Aesthetic issues such as color or architectural appearance, that are not part of a zoning code, should be addressed as part of the agreement between the owner and the contractor.

EB **2. Renailing wood decks:** When replacing roofing, the existing wood roof deck may have to be renailed in accordance with the current provisions of Chapter 16 (High Velocity Hurricane Zones) of the Florida Building Code. (The roof deck is usually concealed prior to removing the existing roof system).

EB **3. Common roofs:** Common roofs are those which have no visible delineation between neighboring units (i.e. townhouses, condominiums, etc.). In buildings with common roofs, the roofing contractor and/or owner should notify the occupants of adjacent units of roofing work to be performed.

EB **4. Exposed ceilings:** Exposed, open beam ceilings are where the underside of the roof decking can be viewed from below. The owner may wish to maintain the architectural appearance; therefore, roofing nail penetrations of the underside of the decking may not be acceptable. The owner provides the option of maintaining this appearance.

EB **5. Ponding water:** The current roof system and/or deck of the building may not drain well and may cause water to pond (accumulate) in low-lying areas of the roof. Ponding can be an indication of structural distress and may require the review of a professional structural engineer. Ponding may shorten the life expectancy and performance of the new roofing system. Ponding conditions may not be evident until the original roofing system is removed. Ponding conditions should be corrected.

EB **6. Overflow scuppers (wall outlets):** It is required that rainwater flow off so that the roof is not overloaded from a build up of water. Perimeter/edge walls or other roof extensions may block this discharge if overflow scuppers (wall outlets) are not provided. It may be necessary to install overflow scuppers in accordance with the requirements of: Chapter 15 and 16 herein and the ***Florida Building Code, Plumbing***.

EB **7. Ventilation:** Most roof structures should have some ability to vent natural airflow through the interior of the structural assembly (the building itself). The existing amount of attic ventilation shall not be reduced. **Exception:** Attic spaces, designed by a Florida-licensed engineer or registered architect to eliminate the attic venting, venting shall not be required.

Owner's/Agent's Signature: [signature] Date: 4 / 08 / 11

Contractor's Signature: James Benavides Permit Number:

Property Address: 15401 SW 79 Ave Miami, FL 33158

TGAH.R2919

Prepared Roof-covering Materials, Asphalt Shingle Wind Resistance

Page Bottom

Prepared Roof-covering Materials, Asphalt Shingle Wind Resistance

See General Information for Prepared Roof-covering Materials, Asphalt Shingle Wind Resistance

TAMKO BUILDING PRODUCTS INC
220 W 4TH ST
PO BOX 1404
JOPLIN, MO 64801 USA

Class H asphalt shingles, designated "Elite Glass Seal," "Elite Glass Seal AR," "Glass Seal," "Glass Seal AR," "Heritage [illegible]," "Heritage [illegible]," "Heritage 30," "Heritage 30 AR," "Heritage XL AR," and "Heritage Vintage" shingles.

Last Updated on 2007-06-20

Questions? Print this page Notice of Disclaimer Page Top

Copyright © 2010 Underwriters Laboratories Inc.®

The appearance of a company's name or product in this database does not in itself assure that products so identified have been manufactured under UL's Follow-Up Service. Only those products bearing the UL Mark should be considered to be Listed and covered under UL's Follow-Up Service. Always look for the Mark on the product.

UL permits the reproduction of the material contained in the Online Certification Directory subject to the following conditions: 1. The Guide Information, Designs and/or Listings (files) must be presented in their entirety and in a non-misleading manner, without any manipulation of the data (or drawings). 2. The statement "Reprinted from the Online Certifications Directory with permission from Underwriters Laboratories Inc." must appear adjacent to the extracted material. In addition, the reprinted material must include a copyright notice in the following format: "Copyright © 2010 Underwriters Laboratories Inc.®"

An independent organization working for a safer world with integrity, precision and [illegible]

MIAMI-DADE COUNTY, FLORIDA
METRO-DADE FLAGLER BUILDING
140 WEST FLAGLER STREET, SUITE 1603
MIAMI, FLORIDA 33130-1563
(305) 375-2901 FAX (305) 375-2908

MIAMI-DADE

BUILDING CODE COMPLIANCE OFFICE (BCCO)
PRODUCT CONTROL DIVISION

NOTICE OF ACCEPTANCE (NOA)

Tamko Building Products, Inc.
P.O. Box 1404
Joplin, MO 64802

SCOPE:
This NOA is being issued under the applicable rules and regulations governing the use of construction materials. The documentation submitted has been reviewed by Miami-Dade County Product Control Division and accepted by the Board of Rules and Appeals (BORA) to be used in Miami Dade County and other areas where allowed by the Authority Having Jurisdiction (AHJ).

This NOA shall not be valid after the expiration date stated below. The Miami-Dade County Product Control Division (In Miami Dade County) and/or the AHJ (in areas other than Miami Dade County) reserve the right to have this product or material tested for quality assurance purposes. If this product or material fails to perform in the accepted manner, the manufacturer will incur the expense of such testing and the AHJ may immediately revoke, modify, or suspend the use of such product or material within their jurisdiction. BORA reserves the right to revoke this acceptance, if it is determined by Miami-Dade County Product Control Division that this product or material fails to meet the requirements of the applicable building code.

This product is approved as described herein, and has been designed to comply with the High Velocity Hurricane Zone of the Florida Building Code.

DESCRIPTION: TAMKO Glass-Seal AR, Elite Glass-Seal and Elite Glass-Seal AR Roof Shingles

LABELING: Each unit shall bear a permanent label with the manufacturer's name or logo, city, state and following statement: "Miami-Dade County Product Control Approved", unless otherwise noted herein.

RENEWAL of this NOA shall be considered after a renewal application has been filed and there has been no change in the applicable building code negatively affecting the performance of this product.

TERMINATION of this NOA will occur after the expiration date or if there has been a revision or change in the materials, use, and/or manufacture of the product or process. Misuse of this NOA as an endorsement of any product, for sales, advertising or any other purposes shall automatically terminate this NOA. Failure to comply with any section of this NOA shall be cause for termination and removal of NOA.

ADVERTISEMENT: The NOA number preceded by the words Miami-Dade County, Florida, and followed by the expiration date may be displayed in advertising literature. If any portion of the NOA is displayed, then it shall be done in its entirety.

INSPECTION: A copy of this entire NOA shall be provided to the user by the manufacturer or its distributors and shall be available for inspection at the job site at the request of the Building Official.

This renews NOA# 05-0912.09 and consists of pages 1 through 5.
The submitted documentation was reviewed by Alex Tigera.

PRODUCT CONTROL ACCEPTED

ROOFING ASSEMBLY APPROVAL

Category:	Roofing
Sub-Category:	07310 3-Tab Shingles
Materials	Asphalt
Deck Type:	Wood

1. SCOPE:

This renews a roofing system using **Tamko Glass-Seal AR, Elite Glass-Seal and Elite Glass-Seal AR** Asphalt Shingles, manufactured by **Tamko Building Products, Inc.** as described in this Notice of Acceptance.

2. PRODUCT DESCRIPTION

Product	Dimensions	Test Specifications	Product Description
Glass-Seal AR, Elite Glass-Seal	12" x 36"	TAS 110	A heavy weight, 200lb/sq, 3-Tab asphalt shingle.
Elite Glass-Seal AR (Tuscaloosa, AL)	12" x 36"	TAS 110	A heavy weight, 220lb/sq, 3-Tab asphalt shingle.
Elite Glass-Seal AR (Frederick, MO)	12-1/4" x 36"	TAS 110	A heavy weight, 220lb/sq, 3-Tab asphalt shingle.

3. EVIDENCE SUBMITTED

Test Agency	Test Identifier	Test Name/Report	Date
Underwriters Laboratories Inc.	TAS-107	02NK9507 01NK40917	03/06/02 12/04/01
PRI Asphalt Technologies	TAS-100	TAP-050-02-01 TAP-051-02-01 TAP-114-02-01	12/31/01 12/31/01 11/10/04
Underwriters Laboratories Inc.	ASTM D3462	04NK24366 R2919 (Letter)	11/05/04 02/25/02

4. LIMITATIONS

4.1 Fire classification is not part of this acceptance; refer to a current Approved Roofing Materials Directory for fire ratings of this product.

4.2 Shall not be installed on roof mean heights in excess of 35 ft.

5. INSTALLATION

5.1 Shingles shall be installed in accordance with Roofing Application Standard RAS 105.

5.2 The manufacturer shall provide clearly written application instructions.

5.3 Exposure and course layout shall be in compliance with Detail 'A', attached.

5.4 Nailing shall be in compliance with Detail 'B', attached.

6. LABELING

6.1 Shingles shall be labeled with the Miami-Dade Logo or the wording "Miami-Dade County-Product Control Approved".

7. BUILDING PERMIT REQUIREMENTS

7.1 Application for building permit shall be accompanied by copies of the following:

7.1.1 This Notice of Acceptance.

7.1.2 Any other documents required by the Building Official or the applicable Building Code in order to properly evaluate the installation of this system.

8. MANUFACTURING PLANTS

8.1 **Tuscaloosa Plant**
2300 35th St.
Tuscaloosa, AL.

8.2 **Frederick Plant (Elite Glass Seal AR shingle ONLY)**
4500 Tamko Dr.
Frederick, MD.

DETAIL A

GLASS-SEAL AR & ELITE GLASS-SEAL AR

All dimensions are in inches.

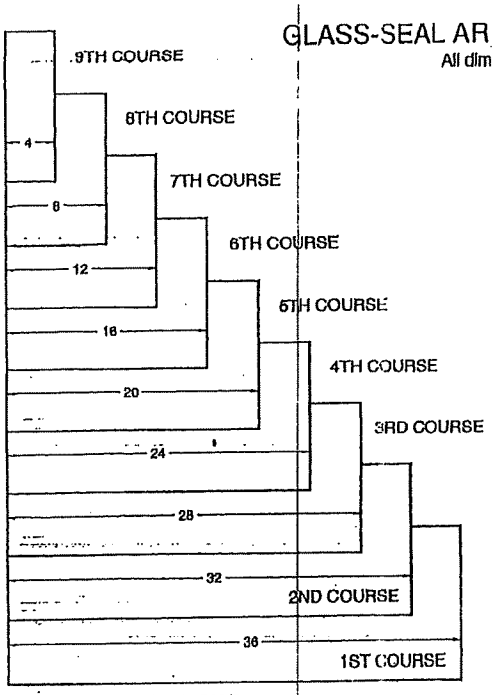

4" METHOD

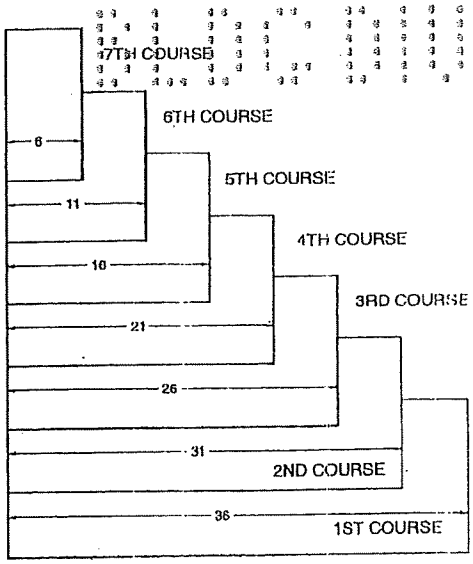

5" METHOD

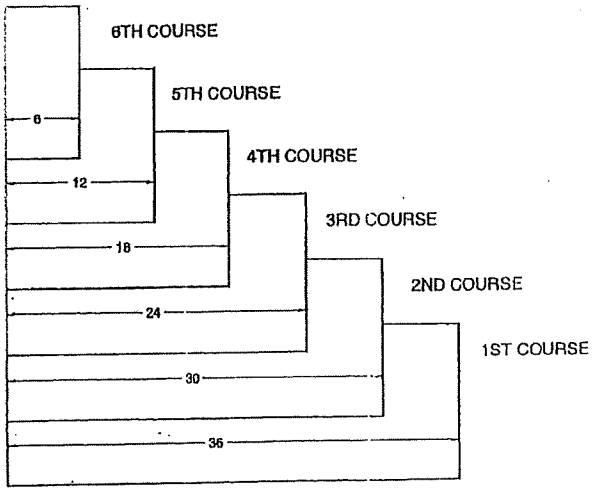

6" METHOD

DETAIL B

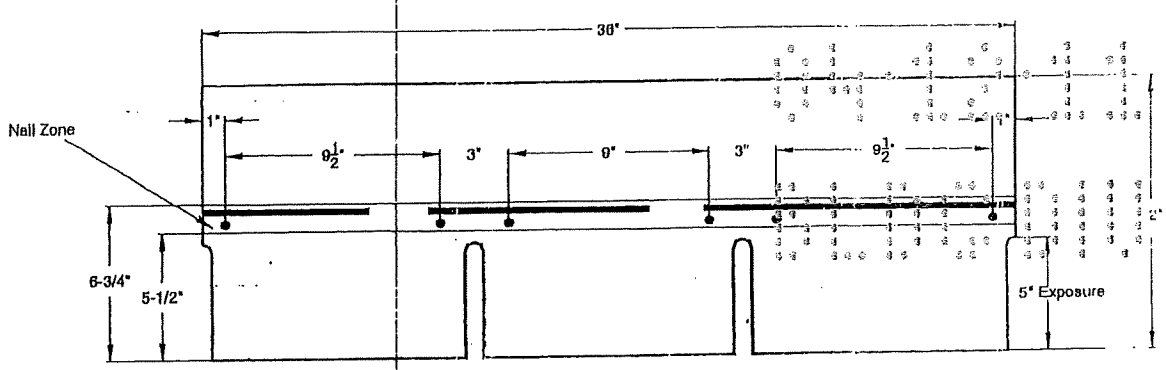

GLASS-SEAL AR, ELITE GLASS-SEAL & ELITE GLASS SEAL AR (TUSCALOOSA)

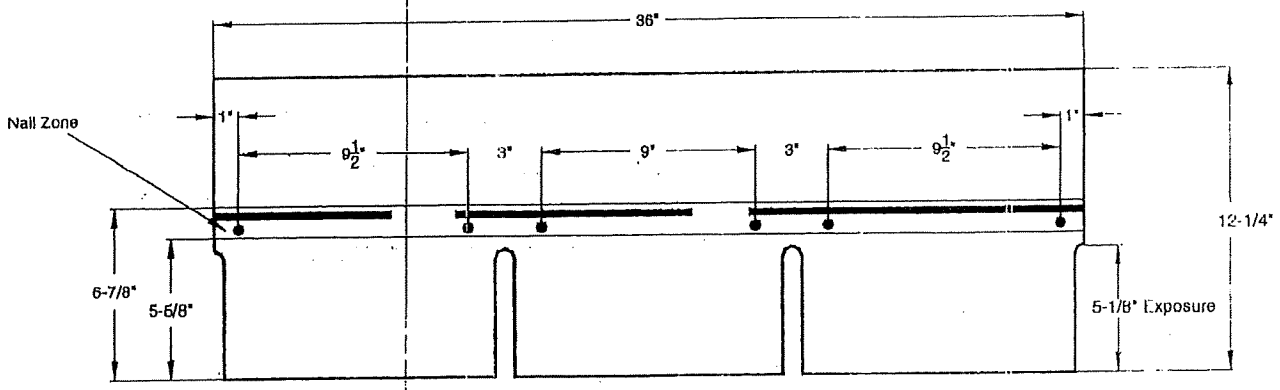

ELITE GLASS SEAL AR (FREDERICK)

END OF THIS ACCEPTANCE

MIAMI-DADE

BUILDING CODE COMPLIANCE OFFICE (BCCO)
PRODUCT CONTROL DIVISION

MIAMI-DADE COUNTY, FLORIDA
METRO-DADE FLAGLER BUILDING
140 WEST FLAGLER STREET, SUITE 1603
MIAMI, FLORIDA 33130-1563
(305) 375-2901 FAX (305) 375-2908

NOTICE OF ACCEPTANCE (NOA)

Polyglass USA, Inc.
150 Lyon Drive
Fernley, NV 89408

SCOPE:
This NOA is being issued under the applicable rules and regulations governing the use of construction materials. The documentation submitted has been reviewed by Miami-Dade County Product Control Division and accepted by the Board of Rules and Appeals (BORA) to be used in Miami Dade County and other areas where allowed by the Authority Having Jurisdiction (AHJ).

This NOA shall not be valid after the expiration date stated below. The Miami-Dade County Product Control Division (In Miami Dade County) and/or the AHJ (in areas other than Miami Dade County) reserve the right to have this product or material tested for quality assurance purposes. If this product or material fails to perform in the accepted manner, the manufacturer will incur the expense of such testing and the AHJ may immediately revoke, modify, or suspend the use of such product or material within their jurisdiction. BORA reserves the right to revoke this acceptance, if it is determined by Miami-Dade County Product Control Division that this product or material fails to meet the requirements of the applicable building code.

This product is approved as described herein, and has been designed to comply with the Florida Building Code and the High Velocity Hurricane Zone of the Florida Building Code.

DESCRIPTION: Polyglass Self-Adhered Roof System over Wood Decks

LABELING: Each unit shall bear a permanent label with the manufacturer's name or logo, city, state and following statement: "Miami-Dade County Product Control Approved", unless otherwise noted herein.

RENEWAL of this NOA shall be considered after a renewal application has been filed and there has been no change in the applicable building code negatively affecting the performance of this product.

TERMINATION of this NOA will occur after the expiration date or if there has been a revision or change in the materials, use, and/or manufacture of the product or process. Misuse of this NOA as an endorsement of any product, for sales, advertising or any other purposes shall automatically terminate this NOA. Failure to comply with any section of this NOA shall be cause for termination and removal of NOA.

ADVERTISEMENT: The NOA number preceded by the words Miami-Dade County, Florida, and followed by the expiration date may be displayed in advertising literature. If any portion of the NOA is displayed, then it shall be done in its entirety.

INSPECTION: A copy of this entire NOA shall be provided to the user by the manufacturer or its distributors and shall be available for inspection at the job site at the request of the Building Official.

This NOA revises NOA No. 07-0822.10 and consists of pages 1 through 20.
The submitted documentation was reviewed by Jorge L. Acebo.

MIAMI-DADE COUNTY APPROVED

NOA No.: 08-0226.06
Expiration Date: 10/11/12
Approval Date: 01/28/09

ROOFING ASSEMBLY APPROVAL

Category:	Roofing
Sub-Category:	Modified Bitumen
Materials	SBS/APP/TPO
Deck Type:	Wood
Maximum Design Pressure	-112.5 psf

TRADE NAMES OF PRODUCTS MANUFACTURED OR LABELED BY APPLICANT:

TABLE 1

Product	Dimensions	Test Specification	Product Description
Elastobase	65' 2" x 3' 3-3/8"	ASTM D 4601	SBS modified asphalt coated fiberglass reinforced base sheet.
Elastobase P	5' 2" x 3' 3-3/8"	ASTM D6164	SBS modified asphalt coated polyester reinforced base sheet.
Elastoflex SA V Vent	32' 6" x 3' 3-3/8"	ASTM D 6163	Partially self-adhered, fiberglass reinforced, SBS modified bitumen membrane with a self-adhering back face and a smooth top surface.
Elastoflex SA V FR	32' 6" x 3' 3-3/8"	ASTM D 6163	Self-adhered, fiberglass reinforced, SBS modified bitumen membrane with a self-adhering back face and a smooth top surface.
Elastoflex SA V	32' 6" x 3' 3-$^3/_8$"	ASTM D 6163	Self-adhered, fiberglass reinforced, SBS modified bitumen membrane with a self-adhering back face and a smooth top surface.
Elastoflex SA P FR	32' 6" x 3' 3-3/8"	ASTM D 6164	Self-adhered, polyester reinforced, SBS modified bitumen membrane with a self-adhering back face and a granule top surface.
Elastoflex SA P	32' 6" x 3' 3-3/8"	ASTM D 6164	Self-adhered, fiberglass reinforced, SBS modified bitumen membrane with a self-adhering back face and a granule top surface.
Polyflex SA P	32' 6" x 3' 3-$^3/_8$"	ASTM D 6222	Self-adhered, polyester reinforced, APP modified bitumen membrane with a self-adhering back face and a granule top surface.
Polyflex SA P FR	32' 6" x 3' 3-$^3/_8$"	ASTM D 6222	Self-adhered, polyester reinforced, APP modified bitumen membrane with a self-adhering back face and a granule top surface.
Polyfresko SBS SAP	32' 6" x 3' 3-3/8"	ASTM D 6164	Self-adhered, fiberglass reinforced, SBS modified bitumen membrane with a self-adhering back face and a granule top surface.
Polyfresko SBS SAP FR	32' 6" x 3' 3-3/8"	ASTM D 6164	Self-adhered, polyester reinforced, SBS modified bitumen membrane with a self-adhering back face and a granule top surface.
Polyfresko APP SAP	32' 6" x 3' 3-$^3/_8$"	ASTM D 6222	Self-adhered, polyester reinforced, APP modified bitumen membrane with a self-adhering back face and a granule top surface.

Deck Type 1:	Wood, Non-Insulated
Deck Description:	$^{19}/_{32}$" or greater plywood or wood plank.
System Type E(3):	Base sheet is mechanically attached to roof deck.

All General and System Limitations apply.

Base Sheet:	One ply of Elastobase or Elastobase P fastened to the deck as described below:
Fastening #1:	Attach base sheet using 11 ga. annular ring shank and 1-5/8" diameter tin caps, spaced 8" o.c. in a 4" lap and 8" o.c. in three equally spaced staggered rows in the center of the sheet.
Fastening #2:	Attach base sheet using Buildex Roofgrip Fasteners and Flat Bottom Plates, Dekfast #14 with Hex Plates or Tru-Fast HD with MP-3 Plates spaced 12" o.c. in a 4" lap and 12" o.c. in two equally spaced staggered rows in the center of the sheet.
Ply Sheet:	One or more plies of Elastoflex SA V or Elastoflex SA V FR self-adhered.
Membrane:	One ply of Polyfresko SBS SAP, Polyfresko SBS SAP FR, Polyfresko APP SAP, Polyfresko APP SAP FR, Elastoflex SA P, Elastoflex SA P FR, Polyflex SA P, PolyBianko, PolyKool or Polyflex SA P FR self adhered.
Surfacing:	(Optional) Install one of the approved surfacing products listed in Table 4 to obtain desired coating or required fire classification.
Maximum Design Pressure:	-52.5 psf; (See General limitation #7.).

Deck Type 1:	Wood, Non-Insulated
Deck Description:	$^{19}/_{32}$" or greater plywood or wood plank, fastened to supports spaced 24" o.c. and to blocking members spaced 48" o.c. with TruFast TP #10x2-7/8" screws spaced 6" o.c.
System Type E(4):	Base sheet is mechanically attached to roof deck.

All General and System Limitations apply.

Base Sheet:	One ply of Elastobase or Elastobase P fastened to the deck as described below:
Fastening:	Attach base sheet using 12 ga. ring shank nails and tin caps spaced 4" o.c. in a 4" lap and 4" o.c. in four equally spaced staggered rows in the center of the sheet.
Ply Sheet:	One or more plies of Elastoflex SA V or Elastoflex SA V FR self-adhered.
Membrane:	One ply of Polyfresko SBS SAP, Polyfresko SBS SAP FR, Elastoflex SA P, Elastoflex SA P FR, Elastoflex SA PG self adhered.
Surfacing:	(Optional) Install one of the approved surfacing products listed in Table 4 to obtain desired coating or required fire classification.
Maximum Design Pressure:	-97.5 psf; (See General limitation #7.)

Deck Type 1:	Wood, Non-Insulated
Deck Description:	$^{19}/_{32}$" or greater plywood or wood plank, fastened to supports spaced 24" o.c. and to blocking members spaced 48" o.c. with #10x3" wood screws spaced 6" o.c.
System Type E(5):	Base sheet is mechanically attached to roof deck.

All General and System Limitations apply.

Base Sheet:	One ply of Elastobase or Elastobase P fastened to the deck as described below:
Fastening:	Attach base sheet using 12 ga. ring shank nails and tin caps spaced 4" o.c. in a 4" lap and 4" o.c. in four equally spaced staggered rows in the center of the sheet.
Ply Sheet:	One or more plies of Elastoflex SA V or Elastoflex SA V FR self-adhered.
Membrane:	One ply of Polyfresko SBS SAP, Polyfresko SBS SAP FR, Elastoflex SA P, Elastoflex SA P FR, Elastoflex SA PG self adhered.
Surfacing:	(Optional) Install one of the approved surfacing products listed in Table 4 to obtain desired coating or required fire classification.
Maximum Design Pressure:	-112.5 psf; (See General limitation #7.)

Deck Type 1:	Wood, Non-Insulated
Deck Description:	$^{19}/_{32}$" or greater plywood or wood plank, fastened to supports spaced 24" o.c. with #8x3" wood screws spaced 6" o.c.
System Type E(6):	Base sheet is mechanically attached to roof deck.

All General and System Limitations apply.

Base Sheet:	One ply of Elastobase or Elastobase P fastened to the deck as described below:
Fastening:	12 ga. annular ring shanked nails and 1-5/8" tin-caps 6" o.c. in 4" lap and 6" o.c. in four equally spaced staggered rows. Tin-caps are primed with PG100 Asphalt Primer or Mule-Hide 121 Asphalt Primer.
Ply Sheet:	One or more plies of Elastoflex SA V or Elastoflex SA V FR self-adhered.
Membrane:	One ply of Polyfresko SBS SAP, Polyfresko SBS SAP FR, Polyfresko APP SAP, Polyfresko APP SAP FR, Elastoflex SA P, Elastoflex SA P FR, Polyflex SA P, PolyBianko, PolyKool or Polyflex SA P FR self adhered.
Surfacing:	(Optional) Install one of the approved surfacing products listed in Table 4 to obtain desired coating or required fire classification.
Maximum Design Pressure:	-112.5 psf; (See General limitation #7.).

WOOD DECK SYSTEM LIMITATIONS:

1. A slip sheet is required with Ply 4 and Ply 6 when used as a mechanically fastened base or anchor sheet.

GENERAL LIMITATIONS:

1. Fire classification is not part of this acceptance; refer to a current Approved Roofing Materials Directory for fire ratings of this product.
2. Insulation may be installed in multiple layers. The first layer shall be attached in compliance with Product Control Approval guidelines. All other layers shall be adhered in a full mopping of approved asphalt applied within the EVT range and at a rate of 20-40 lbs./sq., or mechanically attached using the fastening pattern of the top layer
3. All standard panel sizes are acceptable for mechanical attachment. When applied in approved asphalt, panel size shall be 4' x 4' maximum.
4. An overlay and/or recovery board insulation panel is required on all applications over closed cell foam insulations when the base sheet is fully mopped. If no recovery board is used the base sheet shall be applied using spot mopping with approved asphalt, 12" diameter circles, 24" o.c.; or strip mopped 8" ribbons in three rows, one at each side lap and one down the center of the sheet allowing a continuous area of ventilation. Encircling of the strips is not acceptable. A 6" break shall be placed every 12' in each ribbon to allow cross ventilation. Asphalt application of either system shall be at a minimum rate of 12 lbs./sq.
   Note: Spot attached systems shall be limited to a maximum design pressure of -45 psf.
5. Fastener spacing for insulation attachment is based on a Minimum Characteristic Force (F') value of 275 lbf., as tested in compliance with Testing Application Standard TAS 105. If the fastener value, as field-tested, are below 275 lbf. insulation attachment shall not be acceptable.
6. Fastener spacing for mechanical attachment of anchor/base sheet or membrane attachment is based on a minimum fastener resistance value in conjunction with the maximum design value listed within a specific system. Should the fastener resistance be less than that required, as determined by the Building Official, a revised fastener spacing, prepared, signed and sealed by a Florida registered Professional Engineer, Registered Architect, or Registered Roof Consultant may be submitted. Said revised fastener spacing shall utilize the withdrawal resistance value taken from Testing Application Standards TAS 105 and calculations in compliance with Roofing Application Standard RAS 117.
7. Perimeter and corner areas shall comply with the enhanced uplift pressure requirements of these areas. Fastener densities shall be increased for both insulation and base sheet as calculated in compliance with Roofing Application Standard RAS 117. Calculations prepared, signed and sealed by a Florida registered Professional Engineer, Registered Architect, or Registered Roof Consultant **(When this limitation is specifically referred within this NOA, General Limitation #9 will not be applicable.)**
8. All attachment and sizing of perimeter nailers, metal profile, and/or flashing termination designs shall conform to Roofing Application Standard RAS 111 and applicable wind load requirements.
9. The maximum designed pressure limitation listed shall be applicable to all roof pressure zones (i.e. field, perimeters, and corners). Neither rational analysis, nor extrapolation shall be permitted for enhanced fastening at enhanced pressure zones (i.e. perimeters, extended corners and corners). **(When this limitation is specifically referred within this NOA, General Limitation #7 will not be applicable.)**

END OF THIS ACCEPTANCE

TGFU.R14571
Roofing Systems

Page Bottom

Roofing Systems

See General Information for Roofing Systems

POLYGLASS USA INC
150 LYON DR
FERNLEY, NV 89408 USA

R14571

SINGLE PLY MEMBRANE SYSTEMS

Unless otherwise indicated, the insulation and base sheet are mechanically fastened in place; the membrane is heat welded in place.

(Optional) Noncombustible deck classifications are applicable for use over combustible (15/32 in. min plywood) decks when 1/2 in. (min) gypsum board or 1/4 in. (min) G-P Gypsum DensDeck® are used directly over the deck with all joints staggered 6 in. (min) from plywood joints.

Unless otherwise indicated, in any noncombustible roof deck Classification any UL Classified insulation may be utilized underneath a layer of 1/4 in. (min) G-P Gypsum "DensDeck ® Roofboard","DensDeck Prime® Roofboard","DensDeck DuraGuard™ Roofboard" or ¼ in. (min) USG Corp SECUROCKTM Roof Board Type FRX-G.

General statement for use of vapor retarders and/or deck/insulation adhesives (NC decks only): When such vapor retarders or deck/insulation adhesives are acceptable to POLYGLASS they may be utilized.

"POLYGLASS BASE" , "MODIBASE", "ELASTOBASE T", "Polyglass G2 Base" may be used in lieu of any Type G2 base sheet in any NC Classification. These products may also be used in any C-15/32 Classification in which a generic Type G2 is referenced (i.e. not brand specific). "POLYGLASS Ply 4", "POLYGLASS Ply 6" (Type G1) and "POLYGLASS VENTED BASE" may be used in any NC Classification.

References to polyisocyanurate insulation may include Polyglass Products "POLYTHERM®" and "POLYTHERM® Tapered".

"ELASTOFLEX VG" granule surfaced membrane may be used in place of "ELASTOFLEX V" smooth surfaced membrane for existing systems.

Acceptable alternates to the membranes listed are given below

Insulation: — Polyisocyanurate or polyisocyanurate composite (2 in. min.), glass fiber (7/16 in. min.), perlite (3/4 in. min.) (mechanically fastened or hot mopped).
Ply Sheet: — Type G2, hot mopped.
Membrane: — "POLYALL PLUS", "POLYRAM PLUS" or "POLYSTEEL PLUS", heat fused.

30. **Deck:** NC **Incline:** No Limitations

Insulation: — Polyisocyanurate, polyisocyanurate composite, perlite , any thickness, mechanically fastened or hot mopped.
Ply Sheet: — Type G2, mechanically fastened or hot mopped.
Membrane: — "POLYALL PLUS", "POLYRAM PLUS" or "POLYSTEEL PLUS", heat fused.

31. **Deck:** 1-1/2 T&G **Incline:** No Limitation

Base Sheet: — Type G2, one or more layers, hot mopped, loose bind or mechanically fastened.
Insulation: — Polyisocyanurate, 1.5 in. min.
Insulation: — Perlite, 3/4 in. min.
Ply Sheet: — "ELASTOFLEX V", heat fused, hot mopped or mechanically fastened.
Membrane: — "POLYALL PLUS".

32. **Deck:** C-15/32 **Incline:** 2-1/2

Barrier Board: — 1/4 in. (min) G-P Gypsum DensDeck® with all joints staggered 6 in. from the plywood joints.
Base Sheet: — Type G2, mechanically fastened.
Membrane: — "POLYFLEX G FR", heat fused in place.

33. **Deck:** NC **Incline:** 1/2

Insulation (Optional): — Polyisocyanurate, glass fiber, perlite, wood fiber any combinations, any thickness, mechanically fastened.
Base Sheet: — Type G2, mechanically fastened.
Membrane: — "POLYFLEX", "POLYBOND" or "DUFLEX", heat fused in place.
Surfacing: — "300 AFX" Aluminum Roof Coating at 1-1/2 gal/sq.

34. **Deck:** C-15/32 **Incline:** 2

Insulation (Optional): — Polyisocyanurate, perlite, wood fiber or polyisocyanurate/perlite board, any thickness.
Barrier Board: — 1/4 in. (min) G-P Gypsum DensDeck®, mechanically fastened with all joints staggered 6 in. from the plywood joints.
Base Sheet: — "ELASTOBASE" (poly/sand), mechanically fastened or "ELASTOFLEX SA V FR BASE" (self adhered).
Ply Sheet (Optional): — "ELASTOFLEX SA V FR BASE" (self adhered).
Membrane: — "POLYFLEX SA P FR", "ELASTOFLEX SA P FR", "ELASTOFLEX SA V FR" , "ELASTOFLEX SA V FR HT" , (self adhered) or "POLYFLEX G FR", "DUFLEX G FR", "ELASTOFLEX S6 FR", "ELASTOFLEX VG FR", "ELASTOSHIELD TS 4 FR", heat fused.

35. **Deck:** C-15/32 **Incline:** 1/2

Insulation (Optional): — Polyisocyanurate 1.5 in. (min.) with all joints staggered 6-in. (min.) from the plywood joints.
Base Sheet: — Type G2, mechanically fastened followed by "ELASTOBASE", mechanically fastened.
Ply Sheet (Optional): — "ELASTOFLEX SA V FR BASE" (self adhered).
Membrane: — "POLYFLEX SA P FR", "ELASTOFLEX SA P FR", "ELASTOFLEX SA VG FR" (self adhered) or "DUFLEX G FR", "ELASTOFLEX G S6 FR", "ELASTOFLEX VG FR", "ELASTOSHIELD TS 4 FR", heat fused.

36. **Deck:** NC **Incline:** 2

Insulation: — Atlas Roofing "ACFoam III" or "ACFoam II" or Hunter Panels "H-Shield", any thickness.
Base Sheet: — "ELASTOBASE" (poly/sand), heat fused or mechanically fastened or "ELASTOFLEX SA V FR BASE" (self adhered).
Membrane: — "POLYFLEX SA P FR", "ELASTOFLEX SA P FR", "ELASTOFLEX SA V FR HT" , "ELASTOFLEX SA V FR" (self adhered) or "POLYFLEX G FR", "DUFLEX G FR", "ELASTOFLEX G S6 FR", "ELASTOFLEX VG FR", "ELASTOSHIELD TS 4 FR", heat fused.

37. **Deck:** C-15/32 **Incline:** 3

Insulation (Optional): — Polyisocyanurate, perlite, wood fiber or polyisocyanurate/perlite board, any thickness.
Barrier Board: — 1/4 in. (min) G-P Gypsum DensDeck®, mechanically fastened with all joints staggered 6 in. from the plywood joints.
Base Sheet: — "ELASTOBASE" (poly/sand), mechanically fastened.
Ply Sheet (Optional): — "ELASTOFLEX SA V FR BASE" (self adhered).
Membrane: — "ELASTOFLEX G S6 FR", heat fused.

38. **Deck:** NC **Incline:** 3

Insulation (Optional) : — Atlas Roofing "ACFoam III" or "ACFoam II" or Hunter Panels "H-Shield", any thickness.
Base Sheet: — "ELASTOFLEX SA V FR BASE" (self adhered).
Membrane: — "POLYFLEX SA P FR", "ELASTOFLEX SA P FR" (self adhered).

39. **Deck:** NC **Incline:** 1

Insulation (Optional): — Polyisocyanurate, glass fiber, perlite or wood fiberboard, any thickness, any combination, mechanically fastened or hot mopped in place.
Base Sheet: — Type G2, "ELASTOBASE", "MODIBASE" or "ELASTOFLEX V", mechanically fastened.
Ply Sheet (Optional): — Type G2, "ELASTOBASE", "MODIBASE", "ELASTOFLEX V", "ELASTOFLEX S6", "POLYFLEX" or "DUFLEX" adhered with "2000 MB PREMIUM", cold process adhesive at 1 to 1-1/2 gal/sq.
Membrane: — "ELASTOFLEX G S6 FR", "ELASTOFLEX VG FR", "ELASTOSHIELD TS4 FR", "POLYFLEX G FR" (sand-backed) or "DUFLEX G FR" (sand-backed), adhered with "2000 MB PREMIUM" cold process adhesive at 1 to 1-1/2 gal/sq.

40. **Deck:** C15/32 **Incline:** 1

Insulation (Optional): — Polyisocyanurate (1.3 in. min), glass fiber (7/16 in. min) or perlite (3/4 in. min), mechanically fastened or hot mopped in place.
Base Sheet: — Two plies Type G2, first ply mechanically fastened and the second ply fully adhered with "2000 MB PREMIUM", cold process adhesive at 1 to 1-1/2 gal/sq.
Membrane: — "ELASTOFLEX G S6 FR", "ELASTOFLEX VG FR", "ELASTOSHIELD TS4 FR" or "POLYFLEX G FR" (sand-backed), adhered with "2000 MB PREMIUM" cold process adhesive at 1 to 1-1/2 gal/sq.

OMB Approval No. 2502-0265

Settlement Statement (HUD-1)

B. Type of Loan

1. [X] FHA 2. [ ] RHS 3. [ ] Conv. Unins. 4. [ ] VA 5. [ ] Conv. Ins.	6. File Number 10RE11139	7. Loan Number 72825	8. Mortgage Insurance Case Number 095-19020508

C. NOTE: This form is furnished to give you a statement of actual settlement costs. Amounts paid to and by the settlement agent are shown. Items marked "(p.o.c.)" were paid outside the closing; they are shown here for informational purposes and are not included in the totals.

D. NAME OF BORROWER: Eric H. Bardet and Stephanie Bardet

ADDRESS OF BORROWER: 7320 SW 121st Street, MIAMI, FL 33156

E. NAME OF SELLER: Lourdes Goldberg

ADDRESS OF SELLER: 13401 SW 108 St. Circle, MIAMI, FL 33186

F. NAME OF LENDER: Terrace Mortgage Company

ADDRESS OF LENDER: 900 Ashwood Parkway Suite 130, Atlanta, GA 30338

G. PROPERTY LOCATION: 14401 Southwest 79th Avenue
Palmetto Bay, FL 33158

H. SETTLEMENT AGENT: JULIO C. MARRERO & ASSOCIATES
PH# (305) 446-0163
PLACE OF SETTLEMENT: 3850 BIRD ROAD, PENTHOUSE ONE, 10TH FLOOR, CORAL GABLES, FL 33146

I. SETTLEMENT DATE: 3/25/2011

J. Summary of Borrower's Transaction

100. Gross Amount Due from Borrower		
101. Contract sales price		388,986.00
102. Personal property		
103. Settlement charges to borrower (line 1400)		24,198.19
104.		
105.		
Adjustments for items paid by seller in advance		
106. City/town taxes	to	
107. County taxes	to	
108. Assessments	to	
109.	to	
110.	to	
111.	to	
112.	to	
120. Gross Amount Due from Borrower		413,184.19
200. Amounts Paid by or in Behalf of Borrower		
201. Deposit or earnest money		13,000.00
202. Principal amount of new loan(s)		379,124.00
203. Existing loan(s) taken subject to		
204. Lender Cure Transfer Tax		126.44
205. Broker Credit		300.00
206. Principal amount of new loan(s)		
207.		
208.		
209. Owners Title Policy Credit		1,975.00
209a		
209b		
210. City/town taxes	to	
211. County taxes	1/1/2011 to 3/25/2011	1,718.63
212. Assessments	to	
213.	to	
214.	to	
215.	to	
216.	to	
217.	to	
218.	to	
219.	to	
220. Total Amounts Paid by or in Behalf of Borrower		396,244.07
300. Cash at Settlement from/to Borrower		
301. Gross amount due from borrower (line 120)		413,184.19
302. Less amounts paid by/for borrower (line 220)		396,244.07
303. Cash [X] From [ ] To Borrower		16,940.12

K. Summary of Seller's Transaction

400. Gross Amount Due to Seller		
401. Contract sales price		388,986.00
402. Personal property		
403.		
404.		
405.		
Adjustments for items paid by seller in advance		
406. City/town taxes	to	
407. County taxes	to	
408. Assessments	to	
409.	to	
410.	to	
411.	to	
412.	to	
420. Gross Amount Due To Seller		388,986.00
500. Reductions in Amount Due to Seller		
501. Excess deposit (see instructions)		
502. Settlement charges to seller (line 1400)		21,876.00
503. Existing loan(s) taken subject to		
504. Payoff of first mortgage loan Wells Fargo		359,416.37
505. Payoff of second mortgage loan		
506.		
507. Release of Lien of 2nd Mortgage		4,000.00
508.		
509. Owners Title Policy Credit		1,975.00
509a		
509b		
510. City/town taxes	to	
511. County taxes	1/1/2011 to 3/25/2011	1,718.63
512. Assessments	to	
513.	to	
514.	to	
515.	to	
516.	to	
517.	to	
518.	to	
519.	to	
520. Total Reductions in Amount Due Seller		388,986.00
600. Cash at Settlement to/from Seller		
601. Gross amount due to seller (line 420)		388,986.00
602. Less reductions in amount due seller (line 520)		388,986.00
603. Cash [X] To [ ] From Seller		

©2009 Display Systems, Inc. (863) 763-5555 - Laser Generated

L. Settlement Charges

700. Total Real Estate Broker Fees 19,590.00			
Division of Commission (line 700) as follows:			
701. 11,400.00 Diana Diaz to Americas Casa Latino			
702. 7,600.00 to Keller Williams Realty			
703. Commission paid at Settlement			19,000.00
704. Administration Fee to Americas Casa Latino		590.00	
800. Items Payable In Connection With Loan			
801. Our origination charge	$10,911.00 (from GFE #1)		
802. Your credit or charge (points) for the specific interest rate chosen ($11,847.62)	(from GFE #2)		
803. Your adjusted origination charges to	(from GFE #A)	(936.62)	
804. Appraisal fee to POC to Streetlinks	(from GFE #3) (P.O.C. $700.00 Buyer)		
805. Credit report to CBC	(from GFE #3) (POC $55 B)	31.50	
806. Tax service to	(from GFE #3)		
807. Flood certification to	(from GFE #3)		
808. to			
809. to			
810. to			
900. Items Required By Lender To Be Paid In Advance			
901. Daily interest charges from 3/25/2011 to 4/1/2011 @ 49.3381 /day	(from GFE #10)	345.37	
902. Mortgage Insurance Premium for months to FHA/HUD	(from GFE #3)	3,753.71	
903. Homeowner's Insurance for years to Universal Prop	(from GFE #11)	8,680.50	
904. Flood Insurance years to NFIP		1,087.00	
905. years to			
1000. Reserves Deposited With Lender			
1001. Initial deposit for your escrow account	(from GFE #9)	4,389.77	
1002. Homeowner's insurance 3 months@ 723.38 per month	$ 2,170.14		
1003. Mortgage insurance months@ 281.53 per month	$		
1004. Property taxes 7 months@ 649.30 per month	$ 4,545.10		
1005. Annual assessments months@ per month	$		
1006. Flood Insurance 3 months@ 90.58 per month	$ 271.74		
1007. months@ per month	$		
1008. months@ per month	$		
1009. Aggregate Analysis Amount	-$2,597.21		
1100. Title Charges			
1101. Title services and lender's title insurance	(from GFE #4)	1,487.01	
1102. Settlement or closing fee Julio C. Marrero & Assoc., P.A.	$ 745.00		500.00
1103. Owner's title insurance Commonwealth Land Title Ins. Co.	(from GFE #5)	2,020.00	
1104. Lender's title insurance Commonwealth Land Title Ins. Co.	$ 552.00		
1105. Lender's title policy limit $ 379,124.00	(Sim $250.00) + Ends: FF9 1-227.00;ALTA 8.1-75.00;		
1106. Owner's title policy limit $ 388,986.00			
1107. Agent's portion of the total title insurance premium	$ 1,800.40		
1108. Underwriter's portion of the total title insurance premium	$ 771.60		
1109. Courier Fee to Andres Roque	$75.00		
1110. Title Search to Commonwealth Land Title Ins. Co.	$85.00		
1111. Lien Search to Florida Lien Search			120.00
1112. Reimburse Open Permit Copies to Julio C. Marrero & Associates PA	$15.01		
1113. Reimburse FedEx to Julio C. Marrero & Associates PA	$15.00		
1200. Government Recording and Transfer Charges			
1201. Government recording charges	(from GFE #7)	211.50	**
1202. Recording Fees: Deed $10.00; L-Mortgage(s) $171.50; S-Mortgage(s) ; Releases $20.00			
1203. Transfer taxes	(from GFE #8)	2,163.45	2,256.00
1204. City/county tax/stamps: Deed ; L-Mortgage(s) $758.25; S-Mortgage(s)			
1205. State tax/stamps: Deed $2,334.00; L-Mortgage(s) $1,327.20; S-Mortgage(s)			
1206. to			
1207. to			
1300. Additional Settlement Charges			
1301. Required services that you can shop for	(from GFE #6)	375.00	
1302. Pest Inspection to	$		
1303. Roof Inspection to	$		
1304. Survey to OnLine Land Services, Inc.	375.00		
1305. to			
1306. 2010 Real Estate Taxes to Miami-Dade Tax Collector	(P.O.C. $7,557.83 Seller)		
1307. to			
1308. to			
1309. to			
1400. Total Settlement Charges (enter on lines 103, Section J and 502, Section K)		24,198.19	21,676.00

CERTIFICATION DATE: 3/25/2011

I have carefully reviewed the HUD - 1 Settlement Statement and to the best of my knowledge and belief, it is a true and accurate statement of all receipts and disbursements made on my account or by me in this transaction. I further certify that I have received a copy of the HUD - 1 Settlement Statement.

Eric H. Bardet — Borrower

Lourdes Goldberg — Seller

Stephanie Bardet — Borrower

Seller

The HUD-1 Settlement Statement which I have prepared is a true and accurate account of this transaction. I have caused the funds to be disbursed in accordance with this statement.

JULIO C. MARRERO & ASSOCIATES
Settlement Agent

3/25/2011 Date

WARNING: It is a crime to knowingly make false statements to the United States on this or any other similar form. Penalties upon conviction can include a fine and imprisonment. For details see:Title 18 U.S. Code Section 1001 and Section 1010.

Comparison of Good Faith Estimate (GFE) and HUD-1 Charges			
Charges That Cannot Increase	**HUD-1 Line Number**	**Good Faith Estimate**	**HUD-1**
Our origination charge	#801	$3,559.63	$10,911.00
Your credit or charge (points) for the specific interest rate chosen	#802	($1,847.63)	($11,847.62)
Your adjusted origination charges	#803	$1,712.00	($936.62)
Transfer taxes	#1203	2,037.01	2,163.45

Charges That In Total Cannot Increase More Than 10%		Good Faith Estimate	HUD-1
Government recording charges	#1201	250.00	241.50
Appraisal	#804	450.00	700.00
Credit Report	#805	55.00	46.50
Upfront MIP	#902	3,753.71	3,753.71
Title services and lender's title insurance	#1101	1,380.00	1,457.00
Owners Title Insurance	#1103	1,875.00	2,020.00
Survey	#1304	550.00	375.00
	Total	8,213.71	8,548.71
	Increase between GFE and HUD-1 Charges	$ 335.00 or	4.0785 %

Charges That Can Change		Good Faith Estimate	HUD-1
Initial deposit for your escrow account	#1001	2,492.44	4,389.77
Daily interest charges	#901 $ 49.3381 /day	750.30	345.37
Homeowner's insurance	#903	7,474.68	8,680.50
Flood Insurance	#904		1,087.00

Loan Terms

Your Initial loan amount is	$ 379,124.00
Your Loan term is	30.00 years
Your initial interest rate is	4.75 %
Your initial monthly amount owed for principal, interest, and any mortgage insurance is	$ 2,259.22 includes ☒ Principal ☒ Interest ☒ Mortgage Insurance
Can your interest rate rise?	☒ No. ☐ Yes, it can rise to a maximum of %. The first change will be on and can change again every after . Every change date, your interest rate can increase or decrease by %. Over the life of the loan, your interest rate is guaranteed to never be lower than 4.75 % or higher than 4.75 %.
Even if you make payments on time, can your loan balance rise?	☐ No. ☐ Yes, it can rise to a maximum of $
Even if you make payments on time, can your monthly amount owed for principal, interest, and mortgage insurance rise?	☒ No. ☐ Yes, the first increase can be on and the monthly amount owed can rise to $ The maximum it can ever rise to is $
Does your loan have a prepayment penalty?	☒ No. ☐ Yes, your maximum prepayment penalty is :
Does your loan have a balloon payment?	☒ No. ☐ Yes, you have a balloon payment of $ due in years on
Total monthly amount owed including escrow account payments	☐ You do not have a monthly escrow payment for items, such as property taxes and homeowner's insurance. You must pay these items directly yourself. ☒ You have an additional monthly escrow payment of $ 1,744.79 that results in a total initial monthly amount owed of $ 3,722.48 This includes principal, interest, any mortgage insurance and any items checked below: ☒ Property taxes ☒ Homeowner's insurance ☒ Flood insurance ☐ ☐ ☐

Note: If you have any questions about the Settlement Charges and Loan Terms listed on this form, please contact your lender. File: 10RE11139

Presented By: Stephanie Bardet at 305-336-3788

RE2 - CONDO/CO-OP/VILLA/TOWNHOUSE

Southeast Florida MLS

Address: 1430 BRICKELL BAY DR # 402 Miami FL, 33131

Complex Name: BAYSHORE CO-OP

BRF-201-0087

14401 SW 79 Ave

2007 FLORIDA BUILDING CODE

EFFECTIVE 3/01/2009

OFFICE COPY

VILLAGE OF PALMETTO BAY

THIS COPY OF PLAN MUST BE AVAILABLE ON BUILDING SITE OR NO INSPECTION WILL BE GIVEN

	APPROVED		DISAPPROVED	
SECTION	BY	DATE	BY	DATE
ZONING				
LANDSCAPING				
PUBLIC WORKS				
BUILDING	AR	4/18/11	AR	4/15/11
UTILITIES				
HANDICAP				
STRUCTURAL				
ELECTRICAL				
PLUMBING				
MECHANICAL				
ENERGY				
FIRE				
BUILDING OFFICIAL				

Subject to compliance with all federal, state and county law, rules and regulations. The Village of Palmetto Bay [illegible] responsibility for accuracy of all results of these plans.

NOTICE: In addition to the requirements of [illegible] there may be additional restrictions applicable to this [illegible] record of this county and village

Permit Action Report
VILLAGE OF PALMETTO BAY

Permit #: BRF-2011-0087
Master permit #:

Permit type: bshrf - SHINGLE ROOF
Routing queue: b7 - FLAT ROOF /LOW SLOPE

Address: 14401 SW 79 AVE
PALMETTO BAY, FL 33158

Group # - Name	Action Code	Action Description	Completion Date	Completion Code	Completed By	Comments
1 - PERMIT COUNTER	intake	APPLICATION INTAKE	4/12/2011		jgonzalez	
1 - PERMIT COUNTER	cuff	COLLECT UPFRONT FEE	4/12/2011		jgonzalez	
2 - PLANS PROCESSING	routeplans	ROUTE PLANS FOR REVIEW	4/12/2011		jgonzalez	
3 - BUILDING REVIEW	brev	BUILDING REVIEW	4/18/2011	apprve	aramos	
3 - BUILDING REVIEW	brev	BUILDING REVIEW	4/15/2011	denied	aramos	(1) COMPLETE SECTION C (2) PROVIDE BUILDING ASSESSED VALUE TAX RECORDS
4 - PLANS PROCESSING	notifycust	NOTIFY CUSTOMER	4/15/2011		jgonzalez	
4 - PLANS PROCESSING	compcomn	COMPILE COMMENTS	4/15/2011		jgonzalez	
5 - PERMIT COUNTER	verifycont	VERIFY CONTRACTOR	4/20/2011	apprve	jvillegas	
6 - PLANS PROCESSING	notifycust	NOTIFY CUSTOMER	4/20/2011		jgonzalez	
7 - PERMIT COUNTER	collissue	COLLECT FEES/ISSUE PERMIT	4/20/2011	compl	efraley	
8 - INSPECTIONS	764	ROOF FINAL	5/10/2011	apprve	aramos	FINAL INSP APP - A. RAMOS
8 - INSPECTIONS	700	NOC	5/4/2011	apprve	aramos	OK - A. RAMOS 305-733-7659
8 - INSPECTIONS	760	SHEATHING AFFIDAVIT MITIGATION	5/4/2011	apprve	aramos	OK - A. RAMOS
8 - INSPECTIONS	761	TIN CAP/BASE PLY	5/4/2011	apprve	aramos	TIN CAP INSP APP - A. RAMOS
8 - INSPECTIONS	763	INSTALLATION/IN-PROGRESS	5/4/2011	apprve	aramos	OK - SUBMITTED AFF/ NOC OK - A. RAMOS

RUSH ✓

2nd Rush Review 8/12/11

Palmetto Bay

PLANS PROCESSING

Process Number: BLD-2011-0657

Description of Work: Doors + Windows

Property Address: 14401 SW 79 Ave

Department	Date In	Date Out	Total Business Days	Approved	Denied	Comments
Zoning						
Building	8/9/11	8/9/11	1	✓	✓	
VERIFIED NOAS OK	8/12/11	8/12/11	1			
Structural						
Electrical						
Mechanical						
Plumbing						
Planning & Zoning						
Public Works						
ADA Review						
Final Signature	08/12/11	08/12/11	1	✓		
Code Enforcement Verification	08/12/11	08/12/11	1	✓		
Pricing	08/12/11	8/15/11				
Call for Pick up						

Verified it

Village of Palmetto Bay Permit Application

Department of Building & Capital Projects
9705 E. Hibiscus Street
Palmetto Bay, Florida 33157
Phone: (305) 259-1250 Fax: (305) 259-1291 Inspections: (305) 259-1253

RUSH

GENERAL INFORMATION: Please read these instructions carefully before submitting the work for review

This application must be completed and signed by both the property owner and qualifier. Both of these signatures must be notarized. Please print legibly or type in order not to delay your application. For roofing permits, in addition to this permit you must also fill out a roofing permit application. Express permits require an additional fee and will only be accepted between the hours of 8:00 A.M. and 10:00 A.M., Monday through Friday. All other permits/plans must be dropped off before 4:30 p.m. for regular processing. During the processing of your application you may be asked to submit additional information. There may be additional permits and reviews required from other governmental agencies not affiliated with Palmetto Bay.

APPLICATION:

Clerk's Initials	Plan Process Number	Master Permit Number	Subsidiary Permit Number(s)	Expiration Date
EJ	BLD2011-0657			

Job Address: 14401 SW 79th Avenue (Address) Palmetto Bay (City) FL (State) 33158 (Zip Code)
Unit number

Folio Number: 33-5022-031-0020

Lot: _____ Block: _____

Subdivision: _____ PB: _____ PG: _____

Current Use of Property: Residence

Proposed Use of Property: Same

Description of Work: Replacement of (4) Doors w/ hurricane rated doors, 2 overhead doors, (1) window.

Zoning: _____ Square Feet: _____

Tenant Information: Unit Number:

Linear Feet: _____ Units: _____ Stories: _____

Value of Proposed Work: $7,500 Est. Bldg. Value: _____

Tax Assessed Value: _____

Flood Zone: _____ Base Floor Elev.: _____

Homeowner's Association: _____

I affirm that there ☐ are or ☐ are no restrictive covenants associated with the underlying property that would affect the pending application. Failure to disclose this information shall result in the immediate revocation of any type of permit or certificate of use/occupancy.

Check Permit Type		Check Permit Change		Check Type of Improvement			
Building	X	Change of Contractor		New Construction		Deck/Concrete flatwork	
Electrical		Permit Renewal		Exterior Alteration		Window Replacement	
Mechanical		Plan Revision		Interior Alteration		Shutters	
Plumbing		Permit Extension		Attached Addition		Garage Doors	
LPGX		Supplement		Detached Addition		Storage Shed	
Roofing		Re-inspection Fee		Repair		Railings	
Fence				Repair due to Fire		Stairs	
Sign				Demolish		Windows/Doors	X
Public Works				Screen Enclosure		Roofing	
Other				Driveway		Re-Roof	
				Fence		Seal-cote	
				Pool		Other	

Issued 8/16/11 EJ

00021725

BLD-2011-0657

Architect Information	Engineer Information
Name:	Name:
License Number:	License Number:
Address:	Address:
Telephone Number:	Telephone Number:
Fax Number:	Fax Number:
Other:	Other:

Property Owner	Contractor
Name: MR. Eric Bardet / MRS. Stephanie Bardet	Company Name C-Gate Enterprise Group, INC
Address: 14401 SW 79th Ave, Palmetto Bay FL 33158	Qualifier Samuel Coats
Home Telephone:	License Number CCC 1513915
Business Telephone: 305-336-3788	Address 6705 Red Rd. Suite 508 Coral Gables FL 33143
Other Telephone:	Telephone Number 305-302-2767
Fax Number:	Fax Number 305-397-1441
Does Property have Homestead Exemption	Phone Number for Pick Up 305-302-2767

Bond Company (if applicable)	Mortgage Lender
Name:	Name:
Address:	Address:
City: State: Zip	City: State: Zip

Classification Of Proposed Work

Residential ☒ Duplex ☐ Townhouse ☐ Multi Family ☐ Commercial ☐ Industrial ☐ Other ☐

Effective Code_____ Occupancy_____ Construction Type door replace

Zoning: Variance Number: Remarks:

OWNER AFFIDAVIT

Application is hereby made to obtain a permit to do the work and installation as indicated. I certify that no work or installation has commenced prior to the issuance of a permit and that all work will be performed to meet the standards of all laws regulating construction in this jurisdiction. I understand that a separate permit must be secured for **ELECTRICAL, MECHANICAL, PLUMBING, SIGNS, WELLS, POOLS, ROOFING, SHUTTERS, WINDOWS, FURNACES, BOILERS, HEATERS, TANKS, FENCE, DRIVEWAYS and AIR CONDITIONERS, ETC.** In addition to the requirements of this permit, there may be additional restrictions found in the Public Records, and there may be additional permits required from other governmental entities.

I, the owner of the property, have disclosed all information related to any work that has been performed in the prior twelve months to the Building Division as part of this application. Further, I am fully aware that if the cumulative cost of work to my home or business under this and any other permit equals or exceeds fifty percent of the fair market value of the structure, the entire structure must meet the present federal flood criteria for finished floor elevation. I am also fully aware that if the cost of work to my home or business under this and any other permit equals or exceeds fifty per cent of the replacement cost of the structure, then the entire structure must conform to current code requirements of the Florida Building Code.

I, the owner of the property, understand that a permit application is subject to denial and a validated permit or permit card is subject to revocation or modification based upon applicable deeds, covenants, declarations, easements and any other legal restriction. By issuing a permit, the Village of Palmetto Bay makes no representation as to the existence or validity of any property restriction.

I, the owner of the property certify that all the foregoing information is accurate and that all work will be done in compliance with all applicable laws regulating construction and zoning.

WARNING TO OWNER: YOUR FAILURE TO RECORD A NOTICE OF COMMENCEMENT MAY RESULT IN YOUR PAYING TWICE FOR IMPROVMENTS TO YOUR PROPERTY. A NOTICE OF COMMENCEMENT MUST BE RECORDED AND POSTED ON THE JOB SITE BEFORE THE FIRST INSPECTION. IF YOU INTEND TO OBTAIN FINANCING, CONSULT WITH YOUR LENDER OR AN ATTORNEY BEFORE COMMENCING WORK OR RECORDING YOUR NOTICE OF COMMENCEMENT.

x [signature] Signature of Owner

State of Florida, County of Miami-Dade

Sworn to (or affirmed) and subscribed before this 4 day of August, 2011.

by (print name) Yaneris Elias

Notary Name [signature]

Personally known ☐ or I.D. DL

Type of identification produced:

SAMUEL A. COATS JR
Notary Public - State of Florida
My Comm. Expires Jun 13, 2015
Commission # EE 152[illegible]
Bonded Through National Notary Assn.

Samuel Coats 8/5/2011

x [signature] Signature of Qualifier

State of Florida, County of Miami-Dade

Sworn to (or affirmed) and subscribed before this 4 day of August, 2011.

by (print name)

Notary Name Yaneris Elias

Personally known or I.D. DL

Type of identification produced: Samuel Coats

YANERIS ELIAS
Notary Public
State of Florida
Commission # DD 940907
My Comm. Expires Jan 3, 2014
Bonded Through National Notary Assn.

IMPORTANT NOTICES

- Do not begin work without receiving you validated permit and permit card. Applying for a permit does not grant you the right to commence construction. Construction can only occur during the hours of 7:00 a.m. to 7:00 p.m., Monday thru Saturday and from the hours of 9:00 a.m. to 6:00 p.m. on Sundays and Federal holidays.
- All construction sites must be maintained in a clean and orderly condition free from construction debris. Failure to do so will result in a fine and a suspension of inspections until said property is cleaned.
- Streets and neighboring properties shall be kept free from dirt and debris.
- Swales must be protected from damage by equipment or vehicles and sidewalks cannot be blocked.
- Portable Toilets for construction jobs require a separate permit. If toilet is not available the inspection will not be performed.
- Water cannot be discharged into the right of way or storm drains without the approval of the Public Works Department.
- No equipment or materials can be stored on the right of way; they must only be stored on your property.
- Florida Department of Health approval is required for applications involving Septic Tanks. Department of Environmental Resources Management (DERM) and /or Miami-Dade Water and Sewer Department approval is required for applications involving sewers and water. The tree section of the Department of Environmental Resources Management (DERM) approval is required on all landscape plans and on all tree removal applications.

CHECKLIST (OFFICE USE ONLY)

- ☐ OWNER-BUILDER FORM (Attached)
- ☐ FIRE DEPARTMENT APPROVAL (Commercial/multi (family only)
- ☐ CONCURRENCY (New Construction)
- ☐ PROOF OF OWNERSHIP (Attached)
- ☐ CONDO ASSOCIATION APPROVAL
- ☐ UPFRONT FEES AMOUNT: _____
- ☐ HEALTH DEPARTMENT APPROVAL (Septic/Sewer)
- ☐ IMPACT FEE (New Construction)
- ☐ SCHOOL REVIEW (New Construction)
- ☐ DERM REVIEW (New Construction/Additions/Tree Removal)
- ☐ PUBLIC WORKS
- ☑ PERMIT CLERK REVIEW By: _____
  - ☑ Complete Application
  - ☑ Current liability ins.
  - ☑ Worker's Comp.
  - ☐ Cont. Lic. Check
- ☐ OTHER (Specify and Attach)
- ☐ FLORIDA DEPARTMENT OF BUISNESS AND PROFESSIONAL REGULATION APPROVAL (RESTAURANTS)

PERMIT FEES (OFFICE USE ONLY)

Scanning Fees Small (1.85 per sheet)	153.55	Art in Public Places	
Scanning Fees Large (3.50 per sheet)		Certificate of Use and Occupancy	23.98
Village of Palmetto Bay Permit Fees	89.25	Concurrency Fee (7.35%)	19.34
Miami-Dade County Fees (sq. ft. x $65//1000x0.60)	4.80	Technology Fee (6.3%)	
		Zoning Inspection Fee (157.50 per application)	
Radon-Inspector State Educational Fund and DCA State fee	4.00	Administration Fee	
Code Enforcement Fine		Express Fee (25.00) X2	50.00
Certificate of Completion		Public Works Fee	
Construction Sign Fee	S	Landscape Review Fee (175.00 per hour)	
Roll-off Waste Container Fee (105.00 per container site)		Special Review Fee (89.25 per hour)	
Rework Fee		Other COPIES (62)	9.30

$ 354.22

PLAN REVIEWER APPROVAL AREA (OFFICE USE ONLY)

SECTION	REVIEWER APPROVAL'S NAME	APPROVAL DATE	REJECTED DATE NUMBER 1	REJECTED DATE NUMBER 2	REJECTED DATE NUMBER 3
COMMUNITY DEVELOPMENT					
ZONING					
ELECTRICAL					
MECHANICAL					
PLUMBING					
FIRE					
ROOFING					
PUBLIC WORKS					
PLANNING					
STRUCTURAL					
BUILDING	AR 8/12/11		AR 8/9/11		
BUILDING OFFICIAL					

REWORKS: A fee of **$105.50** may be charged for failure to make required corrections previously indicated. The fee shall be charged after the initial review plus one follow up review per trade. Please note that Florida Statutes 553.80 section 2(b) states "with respect to evaluation of design professionals documents, if a local government finds it necessary, in order to enforce compliance with the Florida Building Code and issue a permit, to reject design documents required by the code three or more times for failure to correct a code violation specifically noted in each rejection, including but not limited to egress, fire protection, structural stability, energy, accessibility, lighting, ventilation, electrical, mechanical, plumbing, and gas systems, or other requirements identified by rule of the Florida Building Commission adopted pursuant to Chapter 120, the local government shall impose, each time after third such review the plans are rejected for that code violation a fee of **four times the amount** of the proportion of the permit fee attributed to plans review".

ISSUING OFFICIAL

FINAL PLAN REVIEWED AND PREPARED FOR ISSUANCE BY: AR DATE: 8/12/11

CONDITIONS OF APPROVAL

PLAN TRACKING

Plans Checked out	Date	Clerk	Plans Checked in	Date	Clerk
Renny Rodriguez	8/9/11	EJ			

Permit Action Report
VILLAGE OF PALMETTO BAY

Permit #: BLD-2011-0657
Master permit #:
Permit type: bwnd - WINDOWS/DOORS (RESIDEN
Routing queue: b7 - FLAT ROOF /LOW SLOPE
Address: 14401 SW 79 AVE
PALMETTO BAY, FL 33158

Group # - Name	Action Code	Action Description	Completion Date	Completion Code	Completed By	Comments
1 - PERMIT COUNTER	intake	APPLICATION INTAKE	8/5/2011	compl	efraley	
1 - PERMIT COUNTER	cuff	COLLECT UPFRONT FEE	8/5/2011	n/a	efraley	
2 - PLANS PROCESSING	routeplans	ROUTE PLANS FOR REVIEW	8/9/2011		gbilbraut	
3 - BUILDING REVIEW	brev	BUILDING REVIEW	8/9/2011	denied	aramos	(1) COMPLETE SUPPLEMENT FORM (BOTH CALCULATED & PRESSURE CAPACITY PRESSURES) (2) SHOW ROOM NAMES ON PLAN (3) UNABLE TO IDENTIFY SOME INFO ON NOA NO 09-1103.05 (4) PROVIDE CURRENT NOA FOR EACH UNIT (5) HIGHLIGHT ALL APPLICABLE INFO ON NOA'S
3 - BUILDING REVIEW	brev	BUILDING REVIEW	8/12/2011	apprve	aramos	
4 - PLANS PROCESSING	compcomn	COMPILE COMMENTS	8/9/2011		gbilbraut	
4 - PLANS PROCESSING	notifycust	NOTIFY CUSTOMER	8/9/2011		gbilbraut	
5 - PERMIT COUNTER	verifycont	VERIFY CONTRACTOR	8/15/2011	apprve	jvillegas	
6 - PLANS PROCESSING	notifycust	NOTIFY CUSTOMER	8/15/2011		jvillegas	
7 - PERMIT COUNTER	collissue	COLLECT FEES/ISSUE PERMIT	8/16/2011	compl	efraley	
8 - INSPECTIONS	723	WINDOW IN-PROGRESS	8/22/2011	denied	aramos	DENIED - WORK NOT AS PER NOA'S (LATE AFTERNOON) - (NO ACCESSS/NO PERMIT (10:10 AM) - A. RAMOS
8 - INSPECTIONS	734	WINDOW FINAL	8/29/2011	apprve	aramos	OK- A. RAMOS
8 - INSPECTIONS	700	NOC	8/22/2011	denied	aramos	DENIED - WORK NOT AS PER NOA'S - A. RAMOS 305-302-2767
8 - INSPECTIONS	779	WOOD BUCKS	8/22/2011	denied	aramos	DENIED - WORK NOT AS PER NOA'S- A. RAMOS
8 - INSPECTIONS	738	DOOR FINAL	8/29/2011	apprve	aramos	OK - SUBMITTED ENGINEER'S LETTER BY LUIS A. LOPEZ, P.E. - A. RAMOS
8 - INSPECTIONS	780	DOOR IN-PROGRESS	8/22/2011	denied	aramos	DENIED - WORK NOT AS PER NOA'S - A. RAMOS
8 - INSPECTIONS	789	MULLIONS & CLIPS	8/29/2011		aramos	
8 - INSPECTIONS	789	MULLIONS & CLIPS	8/22/2011	denied	aramos	DENIED - WORK NOT AS PER NOA'S - A. RAMOS
8 - INSPECTIONS	780	DOOR IN-PROGRESS	8/29/2011		aramos	
8 - INSPECTIONS	738	DOOR FINAL	8/22/2011	denied	aramos	DENIED - WORK NOT AS PER NOA'S - A. RAMOS
8 - INSPECTIONS	723	WINDOW IN-PROGRESS	8/29/2011	apprve	aramos	OK- A. RAMOS
8 - INSPECTIONS	734	WINDOW FINAL	8/22/2011	denied	aramos	DENIED- WORK NOT AS PER NOA'S - A. RAMOS
8 - INSPECTIONS	700	NOC	8/29/2011	apprve	aramos	OK- A. RAMOS
8 - INSPECTIONS	758	FINAL STRUCTURAL BUILDING	8/22/2011	denied	aramos	DENIED - WORK NOT AS PER NOA'S - A. RAMOS
8 - INSPECTIONS	779	WOOD BUCKS	8/29/2011		aramos	

Permit #: BLD-2011-0657
Master permit #:

Permit type: bwnd - WINDOWS/DOORS (RESIDEN
Routing queue: b7 - FLAT ROOF /LOW SLOPE

Address: 14401 SW 79 AVE
PALMETTO BAY, FL 33158

Group # - Name	Action Code	Action Description	Completion Date	Completion Code	Completed By	Comments
8 - INSPECTIONS	758	FINAL STRUCTURAL BUILDING	8/29/2011	apprve	aramos	OK - SUBMITTED ENGINEER'S LETTER BY LUIS A. LOPEZ, P.E. - A. RAMOS

My Home

miamidade.gov

ACTIVE TOOL: SELECT

MIAMI-DADE

Show Me:

Property Information

Search By:

Select Item

Text only

Property Appraiser Tax Estimator

Property Appraiser Tax Comparison

Aerial Photography - 2009

0 115 ft

Legend

- Property Boundary
- Selected Property
- Street
- Highway
- Miami-Dade County
- Water

N W E S

Summary Details:

Folio No.:	33-5022-031-0020
Property:	14401 SW 79 AVE
Mailing Address:	ERIC H BARDET STEPHANIE BARDET 7320 SW 121 ST MIAMI FL 33156-

Property Information:

Primary Zone:	2100 SINGLE FAMILY RESIDENCE
CLUC:	0001 RESIDENTIAL - SINGLE FAMILY
Beds/Baths:	4/3
Floors:	1
Living Units:	1
Adj Sq Footage:	3,244
Lot Size:	19,460 SQ FT
Year Built:	1968
Legal Description:	ROYAL PALM HARBOR 2ND ADDN PB 82-16 LOT 2 BLK 8 F/A/U 30-5022-031-0020 OR 21250-2060 0403 4 COC 23789-2592 08 2005 4

Assessment Information:

Year:	2010	2009
Land Value:	$155,070	$184,361
Building Value:	$201,742	$216,329
Market Value:	$356,812	$400,690
Assessed Value:	$356,812	$400,690

Taxable Value Information:

Year:	2010	2009
Taxing Authority:	Applied Exemption/ Taxable Value:	Applied Exemption/ Taxable Value:
Regional:	$0/$356,812	$0/$400,690
County:	$0/$356,812	$0/$400,690
City:	$0/$356,812	$0/$400,690
School Board:	$0/$356,812	$0/$400,690

Sale Information:

Sale Date:	3/2011
Sale Amount:	$388,986
Sale O/R:	27645-0937
Sales Qualification Description:	Sales qualified as a result of examination of the deed
View Additional Sales	

Additional Information:

Click here to see more information for this property:
Community Development District
Community Redevelopment Area
Empowerment Zone
Enterprise Zone

My Home | Property Information | Property Taxes | My Neighborhood | Property Appraiser

Home | Using Our Site | Phone Directory | Privacy | Disclaimer

If you experience technical difficulties with the Property Information application, or wish to send us your comments, questions or suggestions please email us at Webmaster.

Web Site
© 2002 Miami-Dade County.
All rights reserved.

My Home
Miami-Dade County, Florida

miamidade.gov

MIAMI-DADE

Property Information Map

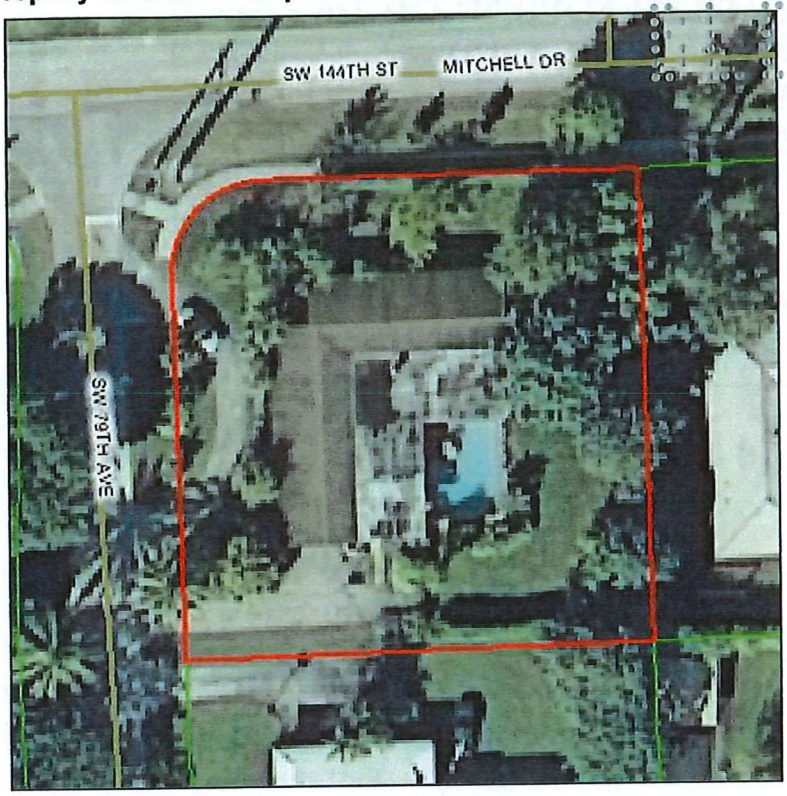

Aerial Photography - 2009

0 — 23 ft

This map was created on 8/4/2011 3:14:21 PM for reference purposes only.

Web Site © 2002 Miami-Dade County. All rights reserved.

Close

Summary Details:

Folio No.:	33-5022-031-0020
Property:	14401 SW 79 AVE
Mailing Address:	ERIC H BARDET STEPHANIE BARDET 7320 SW 121 ST MIAMI FL 33156-

Property Information:

Primary Zone:	2100 SINGLE FAMILY RESIDENCE
CLUC:	0001 RESIDENTIAL - SINGLE FAMILY
Beds/Baths:	4/3
Floors:	1
Living Units:	1
Adj Sq Footage:	3,244
Lot Size:	19,460 SQ FT
Year Built:	1968
Legal Description:	ROYAL PALM HARBOR 2ND ADDN PB 82-16 LOT 2 BLK 8 F/A/U 30-5022-031-0020 OR 21250-2060 0403 4 COC 23789-2592 08 2005 4

Assessment Information:

Year:	2010	2009
Land Value:	$155,070	$184,361
Building Value:	$201,742	$216,329
Market Value:	$356,812	$400,690
Assessed Value:	$356,812	$400,690

Taxable Value Information:

Year:	2010	2009
Taxing Authority:	Applied Exemption/ Taxable Value:	Applied Exemption/ Taxable Value:
Regional:	$0/$356,812	$0/$400,690
County:	$0/$356,812	$0/$400,690
City:	$0/$356,812	$0/$400,690
School Board:	$0/$356,812	$0/$400,690

Sale Information:

Sale Date:	3/2011
Sale Amount:	$388,986
Sale O/R:	27645-0937
Sales Qualification Description:	Sales qualified as a result of examination of the deed
View Additional Sales	

PLEASE NOTE THAT THE RECEIPT OF AN APPLICATION AND /OR ANY ATTACHMENTS THERETO IS MERELY A MINISTERIAL ACTION. SUCH MINISTERIAL ACTION IS NOT AN APPROVAL OR ACCEPTANCE OF THE APPLICATION. PLEASE BE ADVISED THAT A MORATORIUM ORDINANCE IS PENDING, A COPY OF WHICH IS AVAILABLE FROM THE VILLAGE CLERK. DUE TO THE MORATORIUM ORDIANCE THAT IS PENDING, THE VILLAGE PUTS YOU ON NOTICE OF "ZONING IN PROGRESS"

Signed for by Applicant: Samuel Coats

Date: 8/5/2011

Palmetto Bay Building Department
Comment Sheet

Department: BUILDING

BLD 2011 - 0657

Inspector: A. RAMOS

Date: 8/9/11

1. COMPLETE SUPPLEMENT FORM (BOTH CALCULATED & PRESSURE CAPACITY PRESSURES)

2. SHOW ROOMS NAMES ON PLAN.

3. PROVIDE CURRENT NOA FOR EACH UNIT.

4. UNABLE TO IDENTIFY SOME INFORMATION ON NOA NO: 09-1103.05

5. HIGHLIGHT ALL APPLICABLE INFORMATION ON NOA'S.

BARDET RESIDENCE LAYOUT

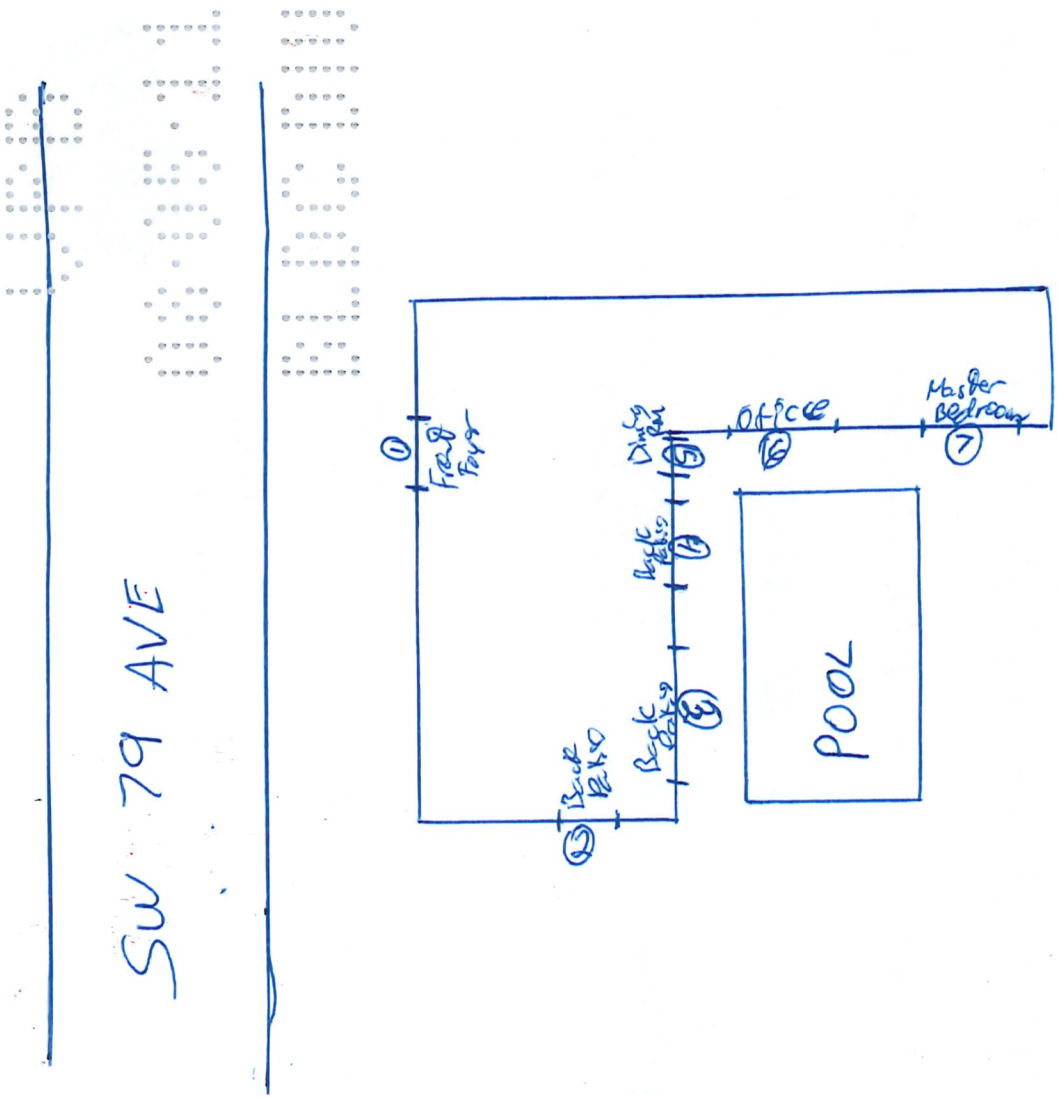

Community Development Department- Building & Permitting Division
8950 SW 152 ST
Palmetto Bay, Florida 33157
Tel: 305-259-1250 Fax: 305-259-1291
www.palmettobay-fl.gov

Village of Palmetto Bay- Building & Permitting Division
Window & Door Permit Supplement

Property Owner: ERIC & STEPHANIE BARDET

Date: 8/5/11

Property Address: 14401 SW 79th AVE

Contractor: C-GATE GROUP

Mark No.	Glass Type / Thickness	Size (W X H)	Unit Type	Unit Name	N.O.A	Mullion Anchorage	Mullion N.O.A.	Mullion Horizontal/ Vertical	Calculated Wind Pressure Neg./Pos.	Pressure Capacity Neg./Pos.	Water Infiltration Requirement Y/ N
1	N/A	65x80	FRONT double Door	Hurricane rated front door	attached letter	N/A	N/A	N/A	-35 + 35	-50/+50	Yes
2	N/A	36x80	Single sidedoor	Hurricane sidedoor	attached letter	N/A	N/A	N/A	-35 +35	-50/+50	Yes
3	N/A	144x84	ROLL DOWN DOOR	Roll down door	09-1108.05	N/A	N/A	N/A	-50+50	~~-55~~/~~+55~~	NO
4	N/A	144x84	ROLL DOWN DOOR	Roll down door	09-1108.05	N/A	N/A	N/A	-50+50	~~-65~~/~~+65~~	NO
5	Hurricane Rated	72x48	WINDOW	Impact window patio	08-0417.06	N/A	N/A	N/A	-30 + 30	-36/+36	YES
6	Hurricane Rated	96x80	FRENCH DOOR W/ SIDE LITE	Impact french door patio	attached letter	N/A	N/A	N/A	-40 + 40	-50/+50	YES
7	Hurricane Rated	96x80	FRENCH DOOR W/ SIDE LITE	Impact french door patio	attached letter	N/A	N/A	N/A	-40+40	-50/+50	YES

Community Affairs

Product Approval

USER: Public User

FL #	FL12061
Application Type	New
Code Version	2007
Application Status	Approved
Comments	
Archived	
Product Manufacturer	Plastpro Inc. / Nanya Plastics Corp.
Address/Phone/Email	5200 W CENTURY BLVD. LOS ANGELES, CA 90045 (440) 969-9773 Ext 16 ronoconnell@plastproinc.com
Authorized Signature	Vivian Wright rickw@rwbldgconsultants.com
Technical Representative Address/Phone/Email	
Quality Assurance Representative Address/Phone/Email	
Category	Exterior Doors
Subcategory	Swinging Exterior Door Assemblies
Compliance Method	Evaluation Report from a Florida Registered Architect or a Licensed Florida Professional Engineer Evaluation Report - Hardcopy Received
Florida Engineer or Architect Name who developed the Evaluation Report	Lyndon F. Schmidt, P.E.
Florida License	PE-43409
Quality Assurance Entity	National Accreditation and Management Institute
Quality Assurance Contract Expiration Date	12/31/2012
Validated By	Ryan J. King, P.E. Validation Checklist - Hardcopy Received
Certificate of Independence	FL12061_R0_COI_CERT of INDEPENDENCE.pdf

Referenced Standard and Year (of Standard)

Standard	Year
ASTM E1300	2002
ASTM E1300	2004
TAS 201, 202, 203	1994

Equivalence of Product Standards Certified By

Sections from the Code

Product Approval Method	Method 1 Option D
Date Submitted	01/21/2009
Date Validated	03/04/2009
Date Pending FBC Approval	03/10/2009
Date Approved	04/07/2009

Summary of Products

FL #	Model, Number or Name	Description
12061.1	a. Fiberglass Door	Up to a 3'0 x 8'0 Glazed "Impact" Fiberglass Single Door - X - Outswing
Limits of Use **Approved for use in HVHZ:** Yes **Approved for use outside HVHZ:** Yes **Impact Resistant:** Yes **Design Pressure:** N/A **Other:** See INST 12061.1 for Design Pressure Ratings, any additional use limitations, installation instructions and product particulars. (Note - ASTM E1300-02 utilized for areas inside the HVHZ)		**Installation Instructions** FL12061_R0_II_INST 12061.1.pdf Verified By: Lyndon F. Schmidt, P.E. 43409 Created by Independent Third Party: Yes **Evaluation Reports** FL12061_R0_AE_EVAL 12061.1.pdf Created by Independent Third Party: Yes
12061.2	b. Fiberglass Door	Up to a 3'0 x 8'0 Glazed "Impact" Fiberglass Single Door with a Sidelite - OX or XO - Outswing
Limits of Use **Approved for use in HVHZ:** Yes **Approved for use outside HVHZ:** Yes **Impact Resistant:** Yes **Design Pressure:** N/A **Other:** See INST 12061.2 for Design Pressure Ratings, any additional use limitations, installation instructions and product particulars. (Note - ASTM E1300-02 utilized for areas inside the HVHZ)		**Installation Instructions** FL12061_R0_II_INST 12061.2.pdf Verified By: Lyndon F. Schmidt, P.E. 43409 Created by Independent Third Party: Yes **Evaluation Reports** FL12061_R0_AE_EVAL 12061.2.pdf Created by Independent Third Party: Yes
12061.3	c. Fiberglass Door	Up to a 3'0 x 8'0 Glazed "Impact" Fiberglass Single Door with Sidelites - OXO - Outswing
Limits of Use **Approved for use in HVHZ:** Yes **Approved for use outside HVHZ:** Yes **Impact Resistant:** Yes **Design Pressure:** N/A **Other:** See INST 12061.3 for Design Pressure Ratings, any additional use limitations, installation instructions and product particulars. (Note - ASTM E1300-02 utilized for areas inside the HVHZ)		**Installation Instructions** FL12061_R0_II_INST 12061.3.pdf Verified By: Lyndon F. Schmidt, P.E. 43409 Created by Independent Third Party: Yes **Evaluation Reports** FL12061_R0_AE_EVAL 12061.3.pdf Created by Independent Third Party: Yes
12061.4	d. Fiberglass Door	Up to a 6'0 x 8'0 Glazed "Impact" Fiberglass Double Door - XX - Outswing
Limits of Use **Approved for use in HVHZ:** Yes **Approved for use outside HVHZ:** Yes **Impact Resistant:** Yes **Design Pressure:** N/A **Other:** See INST 12061.4 for Design Pressure Ratings, any additional use limitations, installation instructions and product particulars. (Note - ASTM E1300-02 utilized for areas inside the HVHZ)		**Installation Instructions** FL12061_R0_II_INST 12061.4.pdf Verified By: Lyndon F. Schmidt, P.E. 43409 Created by Independent Third Party: Yes **Evaluation Reports** FL12061_R0_AE_EVAL 12061.4.pdf Created by Independent Third Party: Yes
12061.5	e. Fiberglass Door	Up to a 6'0 x 8'0 Glazed "Impact" Fiberglass Double Door with Sidelites - OXXO - Outswing
Limits of Use **Approved for use in HVHZ:** Yes **Approved for use outside HVHZ:** Yes **Impact Resistant:** Yes **Design Pressure:** N/A **Other:** See INST 12061.5 for Design Pressure Ratings, any additional use limitations, installation instructions and product particulars. (Note - ASTM E1300-02 utilized for areas inside the HVHZ)		**Installation Instructions** FL12061_R0_II_INST 12061.5.pdf Verified By: Lyndon F. Schmidt, P.E. 43409 Created by Independent Third Party: Yes **Evaluation Reports** FL12061_R0_AE_EVAL 12061.5.pdf Created by Independent Third Party: Yes
12061.6	f. Fiberglass Door	Up to 3'0 x 8'0 Glazed "Non-Impact" Fiberglass Single Door - X - Inswing / Outswing

Limits of Use **Approved for use in HVHZ:** Yes **Approved for use outside HVHZ:** Yes **Impact Resistant:** No **Design Pressure:** N/A **Other:** See INST 12061.6 for Design Pressure Ratings, any additional use limitations, installation instructions and product particulars. (Note - ASTM E1300-02 utilized for areas inside the HVHZ)		**Installation Instructions** FL12061_R0_II_INST_12061.6.pdf Verified By: Lyndon F. Schmidt, P.E. 43409 Created by Independent Third Party: Yes **Evaluation Reports** FL12061_R0_AE_EVAL_12061.6.pdf Created by Independent Third Party: Yes
12061.7	g. Fiberglass Door	Up to a 3'0 x 8'0 Glazed "Non-Impact" Fiberglass Single Door with a Sidelite - OX or XO - Inswing / Outswing
Limits of Use **Approved for use in HVHZ:** Yes **Approved for use outside HVHZ:** Yes **Impact Resistant:** No **Design Pressure:** N/A **Other:** See INST 12061.7 for Design Pressure Ratings, any additional use limitations, installation instructions and product particulars. (Note - ASTM E1300-02 utilized for areas inside the HVHZ)		**Installation Instructions** FL12061_R0_II_INST_12061.7.pdf Verified By: Lyndon F. Schmidt, P.E. 43409 Created by Independent Third Party: Yes **Evaluation Reports** FL12061_R0_AE_EVAL_12061.7.pdf Created by Independent Third Party: Yes
12061.8	h. Fiberglass Door	Up to a 3'0 x 8'0 Glazed "Non-Impact" Fiberglass Single Door with Sidelites - OXO - Inswing / Outswing
Limits of Use **Approved for use in HVHZ:** Yes **Approved for use outside HVHZ:** Yes **Impact Resistant:** No **Design Pressure:** N/A **Other:** See INST 12061.8 for Design Pressure Ratings, any additional use limitations, installation instructions and product particulars. (Note - ASTM E1300-02 utilized for areas inside the HVHZ)		**Installation Instructions** FL12061_R0_II_INST_12061.8.pdf Verified By: Lyndon F. Schmidt, P.E. 43409 Created by Independent Third Party: Yes **Evaluation Reports** FL12061_R0_AE_EVAL_12061.8.pdf Created by Independent Third Party: Yes
12061.9	i. Fiberglass Door	Up to 6'0 x 8'0 Glazed "Non-Impact" Fiberglass Double Door - XX - Inswing / Outswing
Limits of Use **Approved for use in HVHZ:** Yes **Approved for use outside HVHZ:** Yes **Impact Resistant:** No **Design Pressure:** N/A **Other:** See INST 12061.9 for Design Pressure Ratings, any additional use limitations, installation instructions and product particulars. (Note - ASTM E1300-02 utilized for areas inside the HVHZ)		**Installation Instructions** FL12061_R0_II_INST_12061.9.pdf Verified By: Lyndon F. Schmidt, P.E. 43409 Created by Independent Third Party: Yes **Evaluation Reports** FL12061_R0_AE_EVAL_12061.9.pdf Created by Independent Third Party: Yes
12061.10	j. Fiberglass Door	Up to a 6'0 x 8'0 Glazed "Non-Impact" Fiberglass Double Door with Sidelites - OXXO - Inswing / Outswing
Limits of Use **Approved for use in HVHZ:** Yes **Approved for use outside HVHZ:** Yes **Impact Resistant:** No **Design Pressure:** N/A **Other:** See INST 12061.10 for Design Pressure Ratings, any additional use limitations, installation instructions and product particulars. (Note - ASTM E1300-02 utilized for areas inside the HVHZ)		**Installation Instructions** FL12061_R0_II_INST_12061.10.pdf Verified By: Lyndon F. Schmidt, P.E. 43409 Created by Independent Third Party: Yes **Evaluation Reports** FL12061_R0_AE_EVAL_12061.10.pdf Created by Independent Third Party: Yes

Back Next

Department of Community Affairs
Florida Building Code Online
Codes and Standards
2555 Shumard Oak Boulevard
Tallahassee, Florida 32399-2100
(850) 487-1824, Fax (850) 414-8436
© 2000-2010 The State of Florida. All rights reserved.

Privacy Statement | Copyright Statement | Accessibility Statement | Plug-in Software | Customer Service Survey | Contact Us

Product Approval Accepts:

VeriSign Trusted

SAFE

R:\A - Projects\Project Folders\Proj 1201-1300\pf 1262\D. RWBC Drawings\FL-12061\FL-12061.1-5.dwg, FL-12061.5

NAN YA PLASTICS CORP.
PLASTPRO INC.
9 PEACH TREE HILL ROAD
LIVINGSTON, NEW JERSEY 07039

GLAZED FIBERGLASS DOUBLE DOOR WITH SIDELITES OUTSWING

IMPACT

GENERAL NOTES

1. This product has been evaluated and is in compliance with the 2007 Florida Building Code structural requirements including the "High Velocity Hurricane Zone" (HVHZ).
2. Product anchors shall be as listed and spaced as shown on details. Anchor embedment to base material shall be beyond wall dressing or stucco.
3. When used in the "HVHZ" this product complies with section 1626 of the Florida Building Code and does not require an impact resistant covering.
4. For 2x stud framing construction, anchoring of these units shall be the same as that shown for 2x buck masonry construction.
5. Site conditions that deviate from the details of this drawing require further engineering analysis by a licensed engineer or registered architect.
6. Outswing configurations meet water infiltration requirements for "HVHZ".

TABLE OF CONTENTS

SHEET #	DESCRIPTION
1	TYPICAL ELEVATION, DESIGN PRESSURES & GENERAL NOTES
2	PANEL DETAILS, COMPONENTS & GLAZING DETAIL
3	HORIZONTAL CROSS SECTIONS
4	VERTICAL CROSS SECTIONS
5	VERTICAL CROSS SECTIONS
6	BUCK ANCHORING
7	FRAME ANCHORING
8	ASTRAGAL DETAILS
9	BILL OF MATERIALS & COMPONENTS

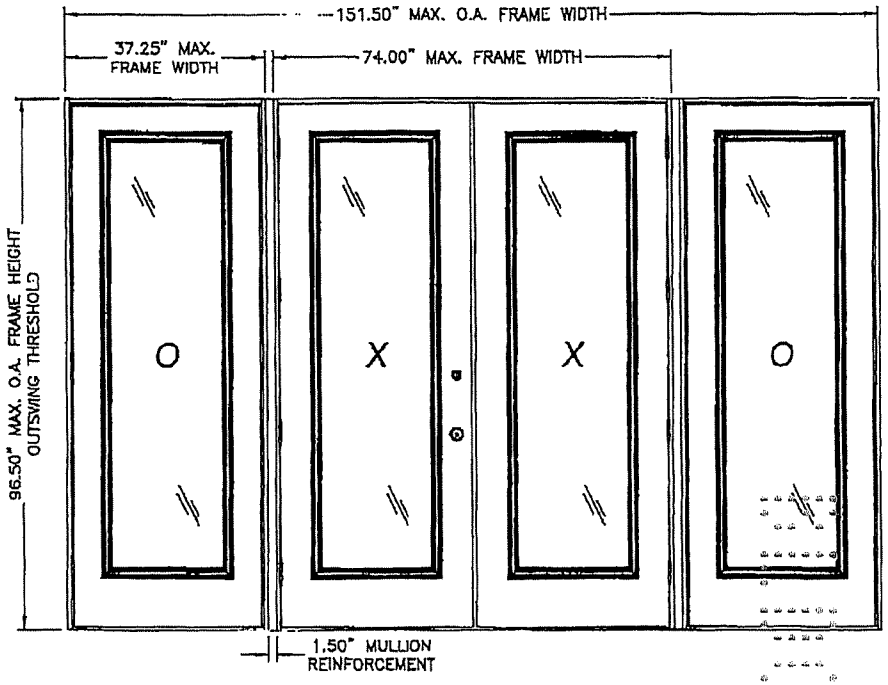

GLAZED DOUBLE DOOR
W/SIDELITES

SWING	MAX. O.A. FRAME DIMENSION	GLASS TYPE	DESIGN PRESSURE (PSF)	
			POSITIVE	NEGATIVE
OUTSWING	151.50" X 96.50"	G1	+50.0	-50.0

Documents Prepared By:
RW BUILDING CONSULTANTS, INC.
P.O. Box 230 Valrico FL 33595
Phone No.: 813.689.9197
Florida Board of Professional Engineers
Certificate Of Authorization No. 9813
LFS 1/22/09
Lyndon F. Schmidt, P.E. No. 13409

PRODUCT: PLASTPRO / NAN YA FIBERGLASS DOOR

PART OR ASSEMBLY: TYPICAL ELEVATION, DESIGN PRESSURES & GENERAL NOTES

NO.	DATE	REVISIONS	BY

DATE: 1/22/09
SCALE: N.T.S.
DWG. BY: AL
CHK. BY: LFS
DRAWING NO.: FL-12061.5
SHEET 1 OF 9

© 2009 R.W. BUILDING CONSULTANTS INC.

R:\A - Projects\Project Folders\Proj 1201-1300\pf 1262\D. RWBC Drawings\FL-12061\FL-12061.1-.S.dwg, 20XXO

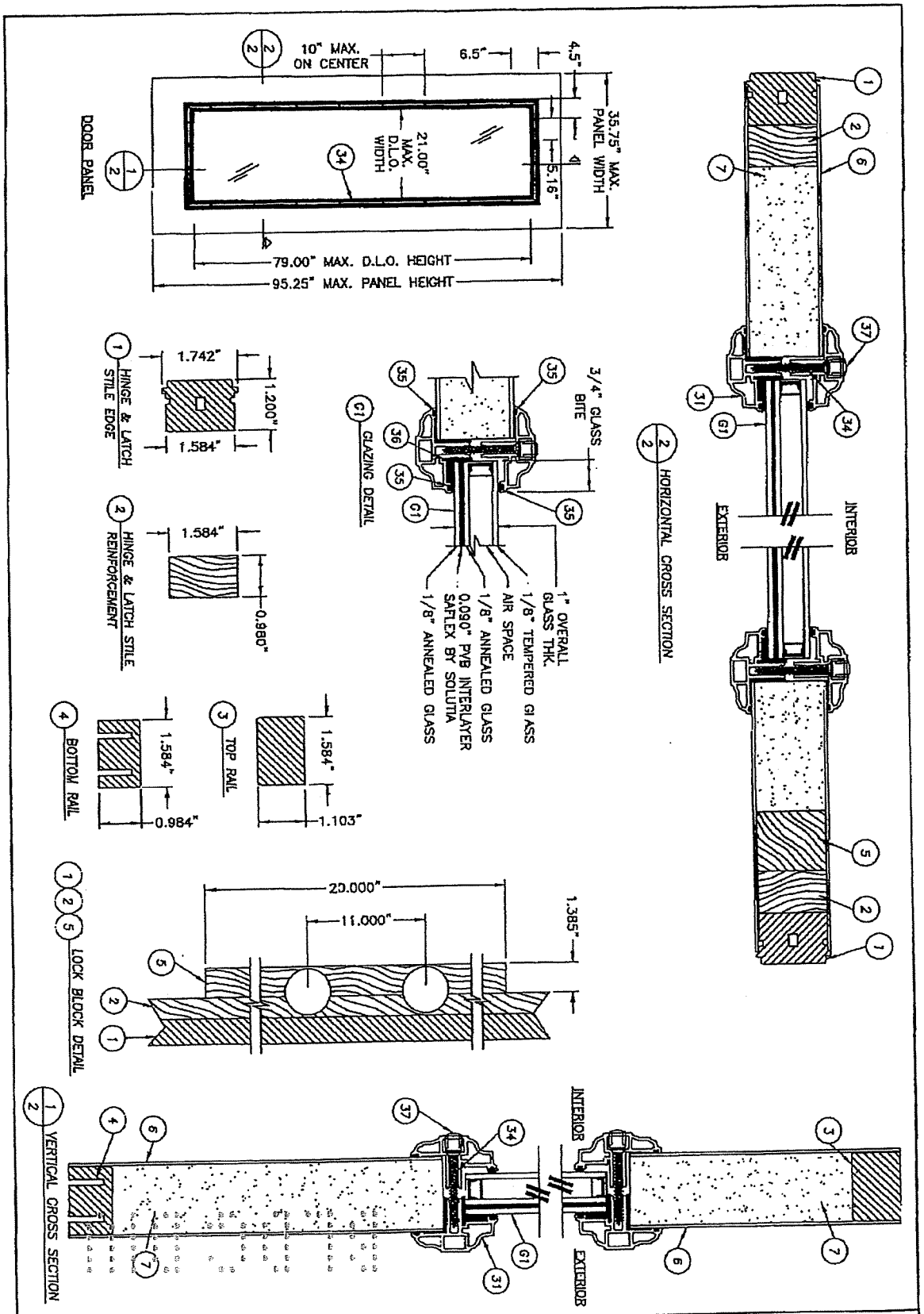

DATE: 1/22/09	SCALE: N.T.S.	TYPE: AL	CHK. BY: LFS
DRAWING NO.: FL-12061.5	SHEET 2 OF 9		

NO.	DATE	REVISIONS	BY

PRODUCT: PLASTPRO / NAN YA FIBERGLASS DOOR

PART OR ASSEMBLY: PANEL DETAILS, COMPONENTS & GLAZING DETAIL

Documents Prepared By:
RW BUILDING CONSULTANTS, INC.
P.O. Box 230 Valrico FL. 33595
Phone No.: 813.659.9197
Florida Board of Professional Engineers
Certificate Of Authorization No. 9813
LFS 1.22.09
Lyndon F. Schmidt, P.E. No. 43409

© 2009 R.W. BUILDING CONSULTANTS INC.

R:\A - Projects\Project Folders\Proj 1201-1300\pf 1262\D. RWBC Drawings\FL-12061\FL-12061.1-.5.dwg, 3OXXO

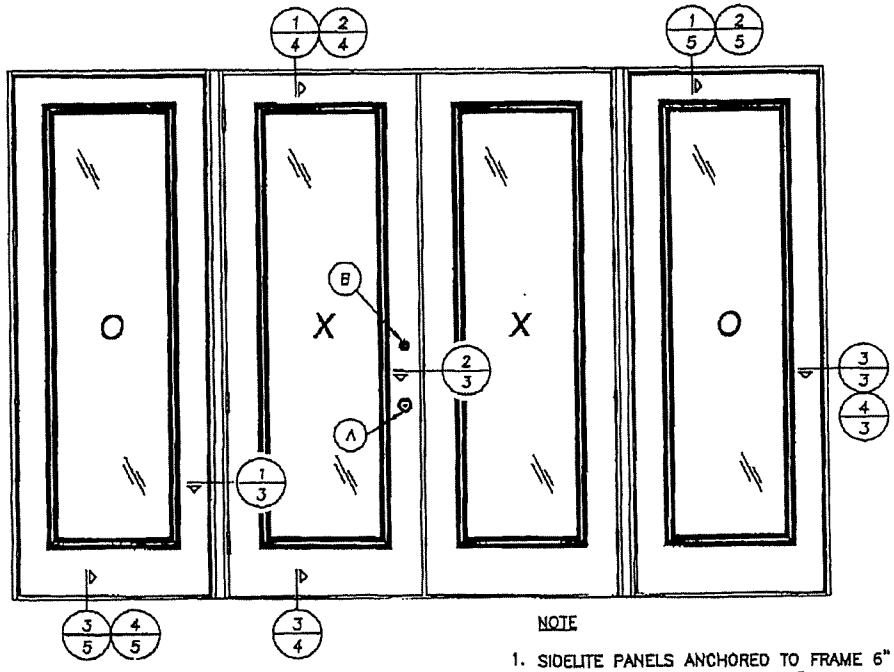

NOTE

1. SIDELITE PANELS ANCHORED TO FRAME 6" FROM TOP OF FRAME THEN 14" MAX. ON CENTER, 8 SCREWS TOTAL EACH JAMB.

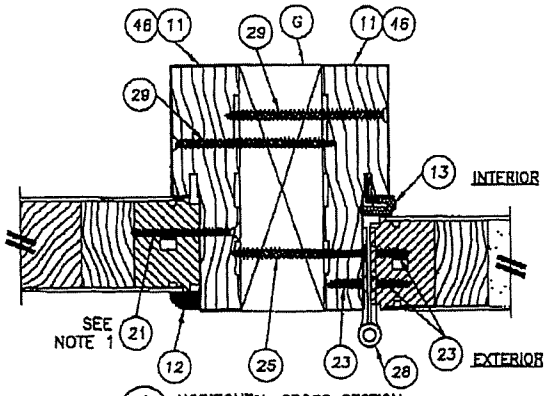

1/3 HORIZONTAL CROSS SECTION

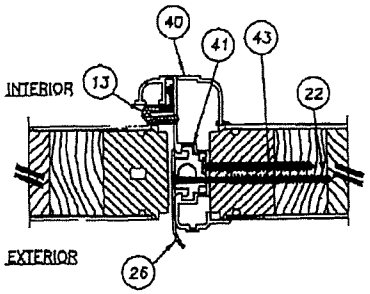

2/3 HORIZONTAL CROSS SECTION

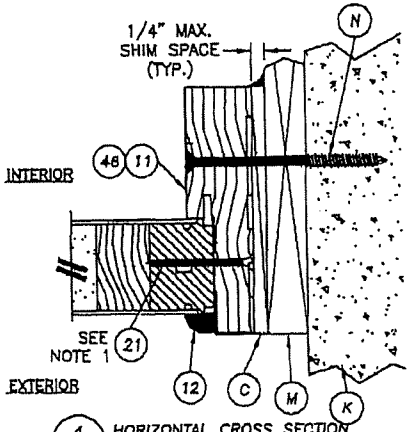

4/3 HORIZONTAL CROSS SECTION
SHOWN W/1X SUB-BUCK SUBSTITUTING CONCRETE SCREWS FOR SCREWS PER SECTION 1714.5.4.2 OF THE FLORIDA BUILDING CODE.

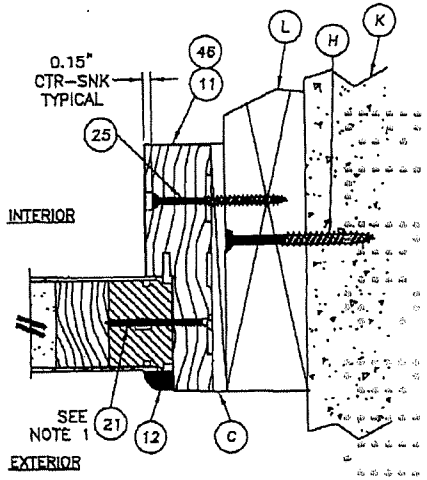

3/3 HORIZONTAL CROSS SECTION

Documents Prepared By:
RW BUILDING CONSULTANTS, INC.
P.O. Box 230 Vatrico FL 33595
Phone No.: 813.659.9197
Florida Board of Professional Engineers
Certificate Of Authorization No. 9813
Lyndon F. Schmidt, P.E. No. 43409

PRODUCT: PLASTPRO / NAN YA FIBERGLASS DOOR

PART OR ASSEMBLY: HORIZONTAL CROSS SECTIONS

NO	DATE	REVISIONS	BY

DATE: 1/22/09
SCALE: N.T.S.
DWG. BY: AL
CHK. BY: LFS
DRAWING NO.: FL-12061.5
SHEET 3 OF 9

© 2009 R.W. BUILDING CONSULTANTS INC.

R:\A - Projects\Project Folders\Proj 1201-1300\pf 1262\D. RWBC Drawings\FL-12061\FL-12061.1-.5.dwg, 40XXO

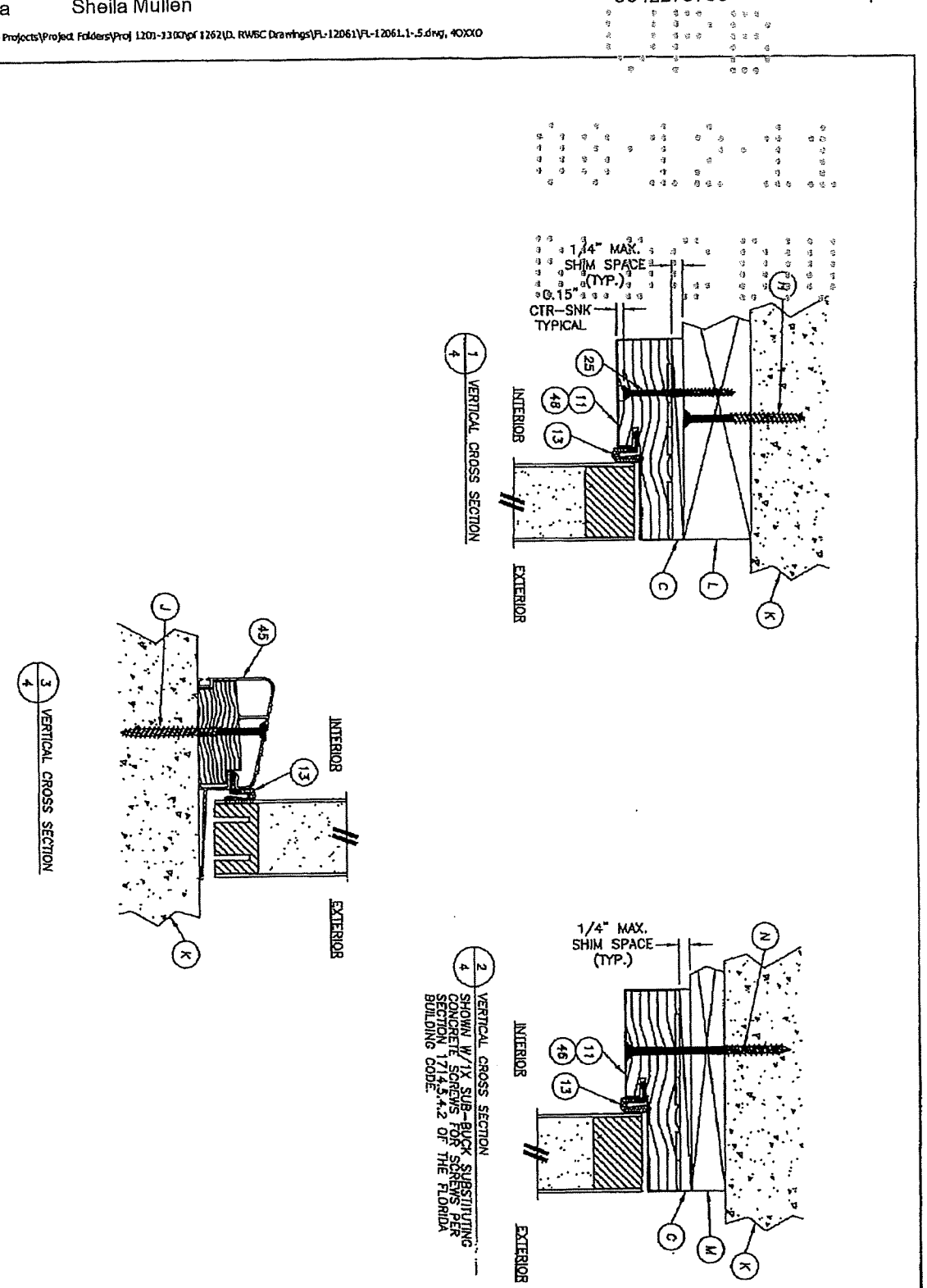

DATE: 1/22/09	NO.	DATE	BY
SCALE: N.T.S.		REVISIONS	
DWG. BY: AL			
CHK. BY: LFS			
DRAWING NO.: FL-12061.5			
SHEET 1 OF 9			

PRODUCT: PLASTPRO / NAN YA FIBERGLASS DOOR

PART OR ASSEMBLY: VERTICAL CROSS SECTIONS

Documents Prepared By:
RW BUILDING CONSULTANTS, INC.
P.O. Box 230 Valrico FL. 33595
Phone No.: 813.659.9197
Florida Board of Professional Engineers
Certificate Of Authorization No. 5813
LFSL 1-22-09
Lyndon F. Schmidt, P.E. No. 43409

© 2009 R.W. BUILDING CONSULTANTS INC.

R:\A - Projects\Project Folders\Proj 1201-1300\pf 1262\D. RWBC Drawings\FL-12061\FL-12061.1-.5.dwg, 50XXO

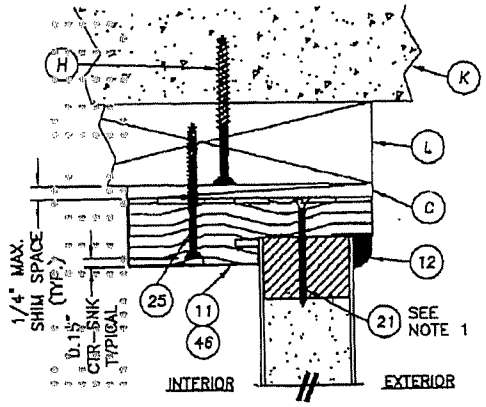

1/5 VERTICAL CROSS SECTION

NOTE
1. SCREWS THRU FRAME & THRESHOLD INTO SIDELITE PANEL LOCATED 3" & 13-1/2" FROM EACH CORNER OF SIDELITE FRAME.

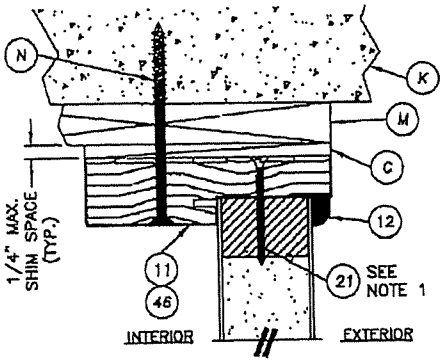

2/5 VERTICAL CROSS SECTION
SHOWN W/1X SUB-BUCK SUBSTITUTING CONCRETE SCREWS FOR SCREWS PER SECTION 1714.5.4.2 OF THE FLORIDA BUILDING CODE.

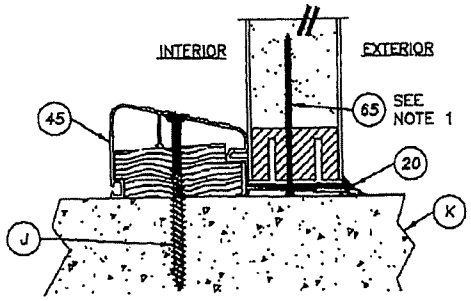

3/5 VERTICAL CROSS SECTION

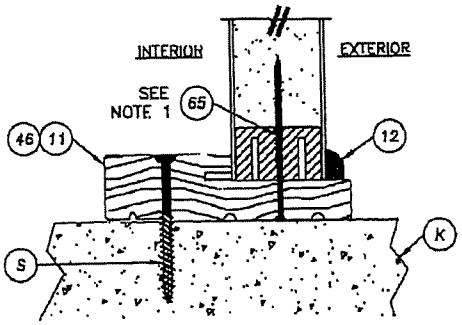

4/5 VERTICAL CROSS SECTION
FRAME OUTSWING ONLY

Documents Prepared By:
RW BUILDING CONSULTANTS, INC.
P.O. Box 230 Valrico FL 33595
Phone No.: 813.659.9187
Florida Board of Professional Engineers
Certificate Of Authorization No. 9813
CF DL 1/22/09
Lyndon F. Schmidt, P.E. No. 43409

PRODUCT: PLASTPRO / NAN YA FIBERGLASS DOOR

PART OR ASSEMBLY: VERTICAL CROSS SECTIONS

NO.	DATE	REVISIONS	BY

DATE: 1/22/09
SCALE: N.T.S.
DWG. BY: AL
CHK. BY: LFS
DRAWING NO.: FL-12061.5
SHEET 5 OF 9

© 2009 R.W. BUILDING CONSULTANTS INC.

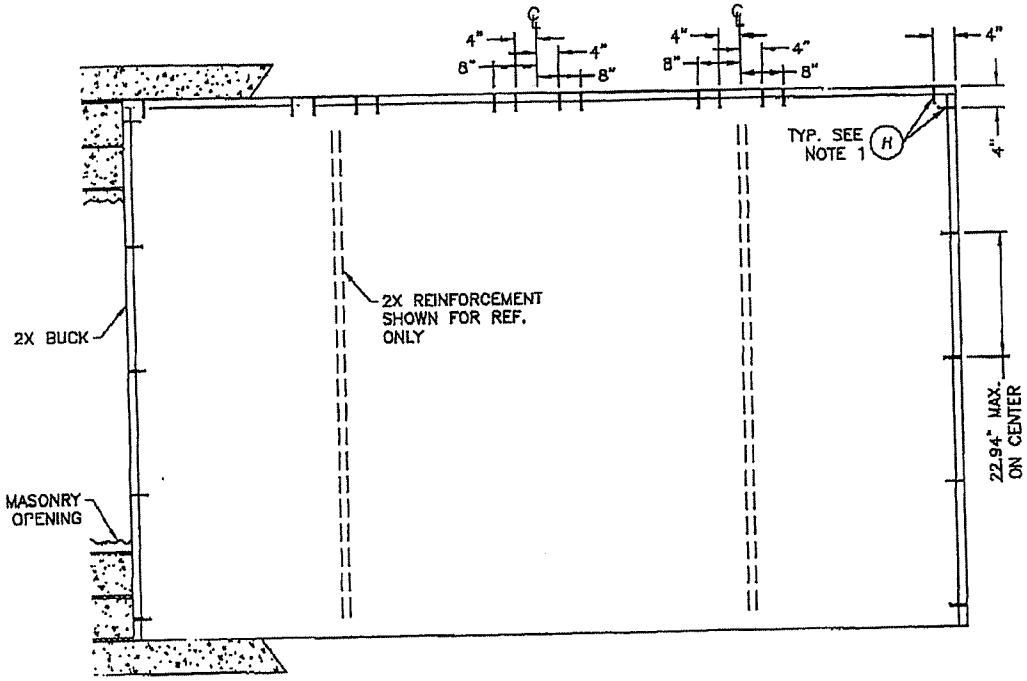

BUCK ANCHORING

NOTES:

1. 1/4" Elco Topcon anchoring 2x buck require a minimum 1" clearance to masonry edges, a 1-1/4" minimum embedment and a minimum 4" clearance to adjacent topcons. Substitution of equal concrete screws from a different supplier may have different edge distance and center distance requirements. Topcon locations at the corners, astragal centerline locations and mullion locations may be adjusted to maintain the minimum edge distance to mortar joints. If Topcon locations noted as "MAX. ON CENTER" must be adjusted to maintain the minimum edge distance to mortar joints, additional Topcons may be required to ensure the maximum on center dimension is not exceeded.

Documents Prepared By:
R.W. BUILDING CONSULTANTS, INC.
P.O. Box: 230 Winter Pk. 32795
Phone No.: 813.859.9197
Florida Board of Professional Engineers
Certificate Of Authorization No. 9815
Lyndon F. Schmidt, P.E. No. 43409

PRODUCT: PLASTPRO / NAN YA FIBERGLASS DOOR

PART OR ASSEMBLY: BUCK ANCHORING

NO.	DATE	REVISIONS	BY

DATE: 1/22/09
SCALE: N.T.S.
DWG. BY: AL
CHK. BY: LFS
DRAWING NO.: FL-12061.5
SHEET 6 OF 8

© 2009 R.W. BUILDING CONSULTANTS INC.

R:\A - Projects\Project Folders\Proj 1201-1300\of 12620. RWBC Drawings\FL-12061\FL-12061.1-5.dwg, 50XXO

R:\A - Projects\Project Folders\Proj 1201-1300\of 1262\D. RWBC Drawings\FL-12061\FL-12061.1-5.dwg, 70XXO

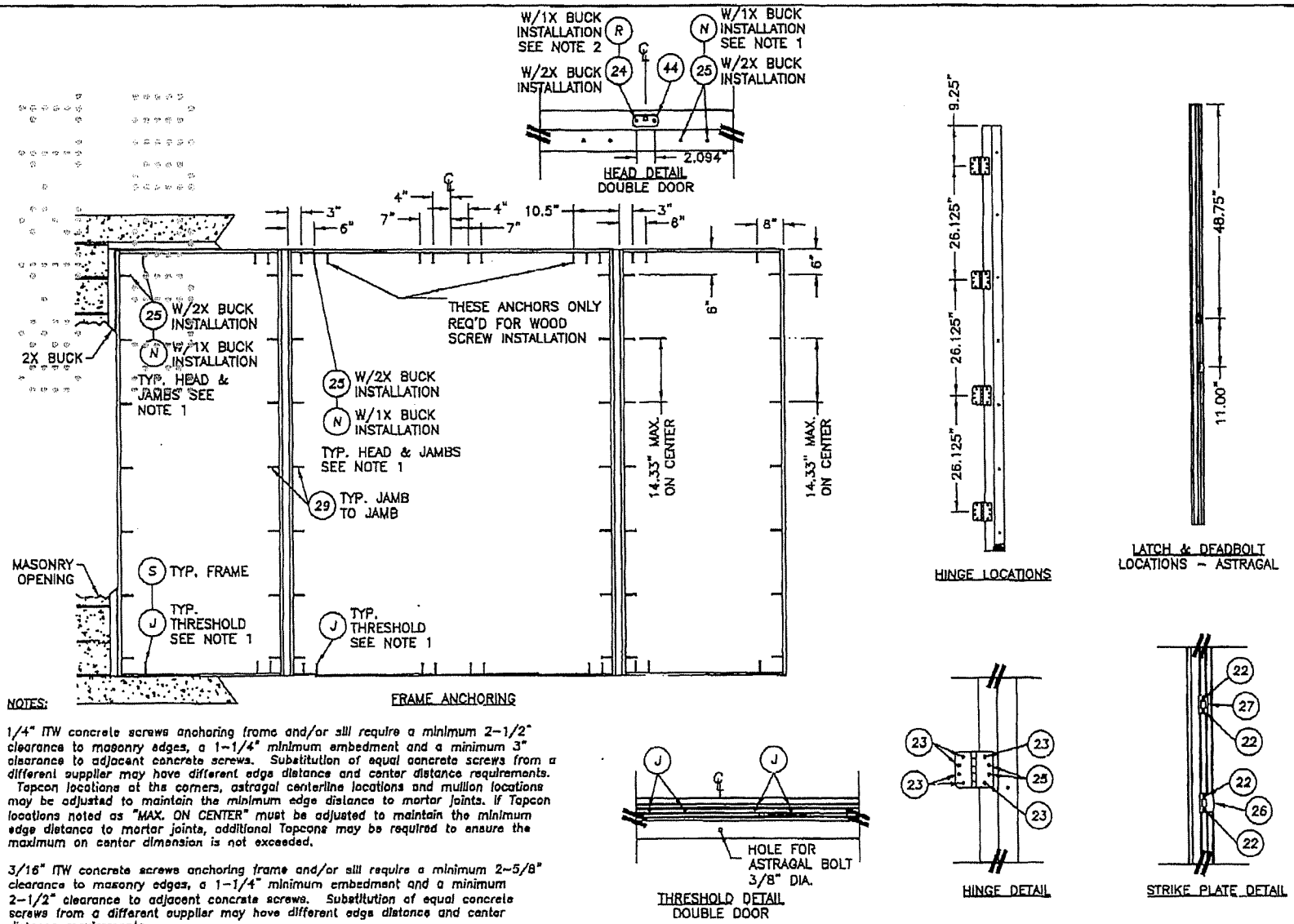

NOTES:

1. 1/4" ITW concrete screws anchoring frame and/or sill require a minimum 2-1/2" clearance to masonry edges, a 1-1/4" minimum embedment and a minimum 3" clearance to adjacent concrete screws. Substitution of equal concrete screws from a different supplier may have different edge distance and center distance requirements. Topcon locations at the corners, astragal centerline locations and mullion locations may be adjusted to maintain the minimum edge distance to mortar joints. If Topcon locations noted as "MAX. ON CENTER" must be adjusted to maintain the minimum edge distance to mortar joints, additional Topcons may be required to ensure the maximum on center dimension is not exceeded.

2. 3/16" ITW concrete screws anchoring frame and/or sill require a minimum 2-5/8" clearance to masonry edges, a 1-1/4" minimum embedment and a minimum 2-1/2" clearance to adjacent concrete screws. Substitution of equal concrete screws from a different supplier may have different edge distance and center distance requirements.

Documents Prepared By:
RW BUILDING CONSULTANTS, INC.
P.O. Box 230 Venice FL 33595
Phone No.: 813.559.9197
Florida Board of Professional Engineers
Certificate of Authorization No. 9613
Lyndon F. Schmidt, P.E. No. 43409

PRODUCT: PLASTPRO / NAN YA FIBERGLASS DOOR
PART OR ASSEMBLY: FRAME ANCHORING

NO	DATE	REVISIONS	BY

DATE: 1/22/09
SCALE: N.T.S.
DWG. BY: AL
CHK. BY: LFS
DRAWING NO.: FL-12061.5
SHEET 7 OF 9

© 2009 R.W. BUILDING CONSULTANTS INC.

R:\A - Projects\Project Folders\Proj 1201-1300\of 12021D. RWBC Drawings\FL-12061\FL-12061.L-5.dwg, 8000

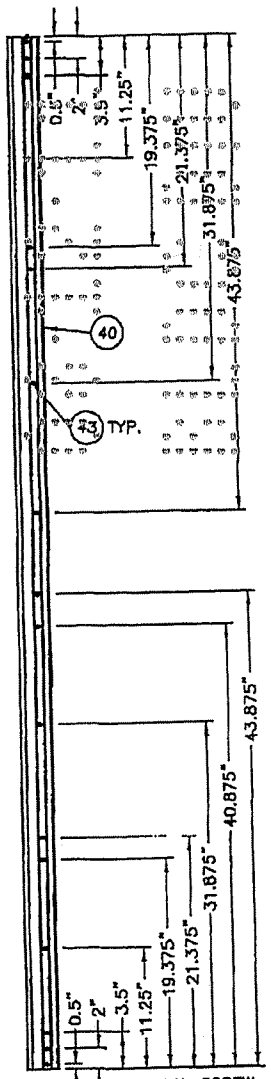

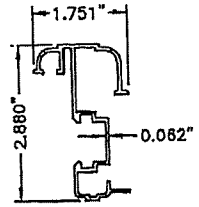

40 ASTRAGAL (DLP)

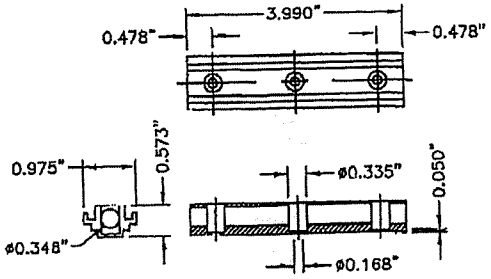

41 CONCEALED STIFFENER (DLP)

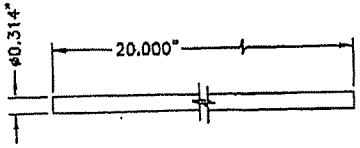

42 SLIDE BOLT ROD (DLP)
TYP. TOP & BOTTOM OF ASTRAGAL
TOP THROUGH 1.975"
BOTTOM THROUGH 1.975"

Documents Prepared By:
RW BUILDING CONSULTANTS, INC.
P.O. Box 230 Valrico FL 33595
Phone No.: 813.659.9197
Florida Board of Professional Engineers
Certificate Of Authorization No. 26513
Lyndon F. Schmidt, P.E. No. 43409

PRODUCT: PLASTPRO / NAN YA FIBERGLASS DOOR

PART OR ASSEMBLY: ASTRAGAL DETAILS

NO.	DATE	REVISIONS	BY

DATE: 1/22/09
SCALE: N.T.S.
DWG. BY: AL
CHK. BY: LFS
DRAWING NO.: FL-12061.5
SHEET 8 OF 9

© 2009 R.W. BUILDING CONSULTANTS INC.

R:\A - Projects\Project Folders\Proj 1201-1300\pf 1262\0. RWBC Drawings\FL-12061\FL-12061.1-5.dwg, 90X00

BILL OF MATERIALS

ITEM	DESCRIPTION	MATERIAL
A	SCHLAGE GRADE 2 (P515-052) KEYED LOCKSET	STEEL
	YALE 100C-PASSAGE KEYED LOCKSET	STEEL
B	SCHLAGE GRADE 2 (P515-089) MAXIMUM SECURITY DEADBOLT	STEEL
	YALE 820.SGL.CYL. DEADBOLT	STEEL
C	1/4" MAX. SHIM SPACE	WOOD
G	2X MULLION REINFORCEMENT (CLEAR PINE)	WOOD
H	1/4" X 2-3/4" ELCO TAPCON	STEEL
J	1/4" X 3-1/4" ITW TAPCON	STEEL
K	MASONRY	CONCRETE
L	2X BUCK	WOOD
M	1X BUCK	WOOD
N	1/4" X 3-3/4" ITW TAPCON	STEEL
R	3/16" X 3-1/4" ITW TAPCON	STEEL
S	1/4" X 2-3/4" ITW TAPCON	STEEL
1	HINGE & LATCH STILE EDGE	COMPOSITE
2	HINGE & LATCH STILE REINFORCEMENT	WOOD
3	TOP RAIL	COMPOSITE
4	BOTTOM RAIL	COMPOSITE
5	LOCK BLOCK	WOOD
6	DOOR SKIN (0.059", 1HK.) PLAST PRO/NANYA Fy= 11,063 PSI	FIBERGLASS
7	FOAM CORE	POLYURETHANE
11	JAMB FINGER-JOINT-PINE SG = .42 OR BETTER	WOOD
12	TRIM	—
13	WEATHERSTRIP	FOAM
20	SEALANT	SILICONE
21	#7 X 2" PFH DRYWALL SCREW	STEEL
22	#8 X 3" PFH WOOD SCREW	STEEL
23	#10 X 3/4" PFH SCREW	STEEL
24	#10 X 2-1/2" PFH SMS	STEEL
25	#10 X 2-1/2" PFH WOOD SCREW	STEEL
26	LATCH STRIKE PLATE	STEEL
27	DEADBOLT STRIKE PLATE	STEEL
28	4" HINGE	STEEL
29	#10 X 3" PFH SCREW	STEEL
31	ODL LITE FRAME	ALUMINUM
34	#10 X 1-3/4" PFH SCREW	STEEL
35	GLAZING COMPOUND REDI-SEAL BY ODL, POLYMERIC FOAM	P/MERIC FOAM
36	STRUCTURAL SILICONE DOW #995	SILICONE
37	SCREW PLUG	—
40	ASTRAGAL 6063-T5 ALUMINUM BY DLP	ALUMINUM
41	CONCEALED STIFFENER 6063-T6 ALUMINUM BY DLP	ALUMINUM
42	SLIDE BOLT ROD	STEEL
43	#8 X 2" PPH SCREW	STEEL
44	ASTRAGAL STRIKE PLATE @ HEAD	STEEL
45	OUTSWING THRESHOLD BY DLP	ALUM./WOOD
46	POLY FIBER JAMB (PLASTPRO / NAN YA)	POLY FIBER
65	#6 X 3" PFH WOOD SCREW	STEEL

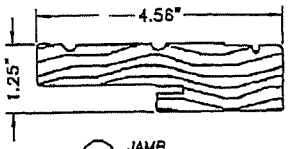

(11) JAMB

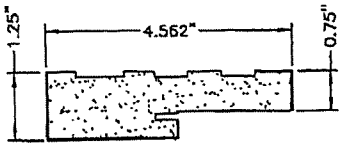

(46) POLY FIBER JAMB

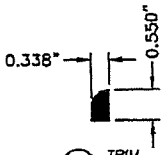

(12) TRIM

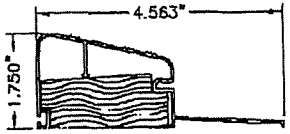

(45) OUTSWING THRESHOLD

Documents Prepared By:
RW BUILDING CONSULTANTS, INC.
P.O. Box 230 Valrico FL. 33595
Phone No.: 813.659.9197
Florida Board of Professional Engineers
Certificate of Authorization No. 8813
Lyndon F. Schmidt, P.E. No. 43409

PRODUCT: PLASTPRO / NAN YA FIBERGLASS DOOR

PART OR ASSEMBLY: BILL OF MATERIALS & COMPONENTS

NO.	DATE	BY

REVISIONS

DATE: 1/22/09
SCALE: N.T.S.
DWG. BY: AL
CHK. BY: LFS
DRAWING NO.: FL-12061.5
SHEET 9 OF 9

© 2009 R.W. BUILDING CONSULTANTS INC.

BCIS Home Log In User Registration Hot Topics Submit Surcharge Stats & Facts Publications FBC Staff BCIS Site Map Links Search

Community Affairs

Product Approval

USER: Public User

Product Approval Menu > Product or Application Search > Application List > Application Detail

FL #	FL7241-R1
Application Type	Revision
Code Version	2007
Application Status	Approved
Comments	
Archived	
Product Manufacturer	Plastpro Inc. / Nanya Plastics Corp.
Address/Phone/Email	5200 W CENTURY BLVD. LOS ANGELES, CA 90045 (440) 969-9773 Ext 16 ronoconnell@plastproinc.com
Authorized Signature	Ron O'Connell ronoconnell@plastproinc.com
Technical Representative Address/Phone/Email	
Quality Assurance Representative Address/Phone/Email	
Category	Exterior Doors
Subcategory	Swinging Exterior Door Assemblies
Compliance Method	Evaluation Report from a Florida Registered Architect or a Licensed Florida Professional Engineer Evaluation Report - Hardcopy Received
Florida Engineer or Architect Name who developed the Evaluation Report	Lyndon F. Schmidt
Florida License	PE-43409
Quality Assurance Entity	National Accreditation and Management Institute
Quality Assurance Contract Expiration Date	12/31/2012
Validated By	Ryan J. King, P.E. Validation Checklist - Hardcopy Received
Certificate of Independence	FL7241_R1_COI_CERT OF INDEPENDENCE.pdf

Referenced Standard and Year (of Standard)

Standard	Year
TAS 201, 202, 203	1994

Equivalence of Product Standards Certified By

Sections from the Code

Aug 12 11 09:18a Sheila Mullen 9542278786 p.15

Product Approval Method	Method 1 Option D
Date Submitted	10/03/2008
Date Validated	10/06/2008
Date Pending FBC Approval	10/19/2008
Date Approved	12/10/2008

Summary of Products

FL #	Model, Number or Name	Description
7241.1	a. Distinction Series	Up to a 3'0 x 6'8 Opaque "Impact" Fiberglass Single Door - X - Inswing or Outswing
Limits of Use **Approved for use in HVHZ:** Yes **Approved for use outside HVHZ:** Yes **Impact Resistant:** Yes **Design Pressure:** N/A **Other:** See INST 7241.1 for Design Pressure Ratings, any additional use limitations, installation instructions and product particulars.		**Installation Instructions** FL7241_R1_II_INST 7241.1.pdf Verified By: Lyndon F. Schmidt, P.E. 43409 Created by Independent Third Party: Yes **Evaluation Reports** FL7241_R1_AE_Equiv FL 7241-G26.pdf FL7241_R1_AE_EVAL 7241.1.pdf Created by Independent Third Party: Yes
7241.2	b. Distinction Series	Up to a 6'0 x 6'8 Opaque "Impact" Fiberglass Double Door - XX - Inswing or Outswing
Limits of Use **Approved for use in HVHZ:** Yes **Approved for use outside HVHZ:** Yes **Impact Resistant:** Yes **Design Pressure:** N/A **Other:** See INST 7241.2 for Design Pressure Ratings, any additional use limitations, installation instructions and product particulars.		**Installation Instructions** FL7241_R1_II_INST 7241.2.pdf Verified By: Lyndon F. Schmidt, P.E. 43409 Created by Independent Third Party: Yes **Evaluation Reports** FL7241_R1_AE_Equiv FL 7241-G26.pdf FL7241_R1_AE_EVAL 7241.2.pdf Created by Independent Third Party: Yes
7241.3	c. Distinction Series	Up to a 3'0 x 8'0 Opaque "Impact" Fiberglass Single Door - X - Inswing or Outswing
Limits of Use **Approved for use in HVHZ:** Yes **Approved for use outside HVHZ:** Yes **Impact Resistant:** Yes **Design Pressure:** N/A **Other:** See INST 7241.3 for Design Pressure Ratings, any additional use limitations, installation instructions and product particulars.		**Installation Instructions** FL7241_R1_II_INST 7241.3.pdf Verified By: Lyndon F. Schmidt, P.E. 43409 Created by Independent Third Party: Yes **Evaluation Reports** FL7241_R1_AE_Equiv FL 7241-G26.pdf FL7241_R1_AE_EVAL 7241.3.pdf Created by Independent Third Party: Yes
7241.4	d. Distinction Series	Up to a 6'0 x 8'0 Opaque "Impact" Fiberglass Double Door - XX - Inswing or Outswing
Limits of Use **Approved for use in HVHZ:** Yes **Approved for use outside HVHZ:** Yes **Impact Resistant:** Yes **Design Pressure:** N/A **Other:** See INST 7241.4 for Design Pressure Ratings, any additional use limitations, installation instructions and product particulars.		**Installation Instructions** FL7241_R1_II_INST 7241.4.pdf Verified By: Lyndon F. Schmidt, P.E. 43409 Created by Independent Third Party: Yes **Evaluation Reports** FL7241_R1_AE_Equiv FL 7241-G26.pdf FL7241_R1_AE_EVAL 7241.4.pdf Created by Independent Third Party: Yes

Back Next

Department of Community Affairs
Florida Building Code Online
Codes and Standards
2555 Shumard Oak Boulevard
Tallahassee, Florida 32399-2100
(850) 487-1824, Fax (850) 414-8436
© 2000-2010 The State of Florida. All rights reserved.

Privacy Statement | Copyright Statement | Accessibility Statement | Plug-in Software | Customer Service Survey | Contact Us

Product Approval Accepts:

VeriSign
Trusted

Credit Card
SAFE

NAN YA PLASTICS CORP.
PLASTPRO INC.

9 PEACH TREE HILL ROAD
LIVINGSTON, NEW JERSEY 07039

DISTINCTION SERIES
OPAQUE FIBERGLASS DOOR
INSWING / OUTSWING
"IMPACT"

GENERAL NOTES

1. This product has been evaluated and is in compliance with the 2007 Florida Building Code (FBC) structural requirements including the "High Velocity Hurricane Zone" (HVHZ).
2. Product anchors shall be as listed and spaced as shown on details. Anchor embedment to base material shall be beyond wall dressing or stucco.
3. When used in the "HVHZ" this product complies with section 1626 of the Florida Building Code and does not require an impact resistant covering.
4. When used in areas outside of the "HVHZ" requiring wind borne debris protection this product complies with Section 1609.1.2 of the 2007 FBC and does not require an impact resistant covering. This product meets missile level "D" and includes Wind Zone 4 as defined in ASTM E1996.
5. For 2x stud framing construction, anchoring of these units shall be the same as that shown for 2x buck masonry construction.
6. Site conditions that deviate from the details of this drawing require further engineering analysis by a licensed engineer or registered architect.
7. Outswing configurations meet water infiltration requirements for "HVHZ".
8. Inswing configurations do not meet the water infiltration requirements for the "HVHZ". Inswing units shall be installed only in non-habitable areas or at habitable locations protected by an overhang or canopy such that the angle between the edge of canopy or overhang to sill is less than 45 degrees.

TABLE OF CONTENTS

SHEET #	DESCRIPTION
1	Typical elevation, design pressures, & general notes
2	Door panel details
3	Horizontal cross sections
4	Vertical cross sections
5	Buck and frame anchoring - 2X buck masonry construction
6	Frame anchoring - 1X buck masonry construction
7	Bill of materials & components

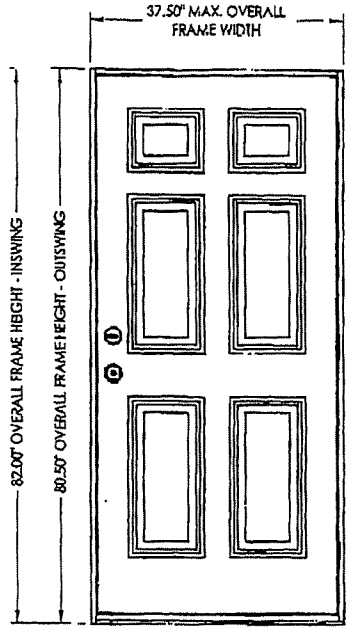

SWING	MAX. FRAME DIMENSION	DESIGN PRESSURE (PSF) POSITIVE	DESIGN PRESSURE (PSF) NEGATIVE
INSWING	37.50" x 82.00"	+47.5	-47.5
OUTSWING	37.50" x 80.50"	+50.0	-50.0

Documents Prepared By:
RW BUILDING CONSULTANTS, INC.
P.O. Box 230 Valrico FL 33595
Phone No.: 813.659.9197
Florida Board of Professional Engineers
Certificate Of Authorization No. 9813
Lyndon F. Schmidt, P.E. No. 43409
10-2-08

PRODUCT: NAN YA PLASTICS CORP. PLASTPRO INC. FIBERGLASS DOOR

PART OR ASSEMBLY: TYPICAL ELEVATION, DESIGN PRESSURES & GENERAL NOTES

NO.	DATE	REVISIONS	BY

DATE: 09/04/08
SCALE: N.T.S.
DWG. BY: RR
CHK. BY: LFS
DRAWING NO.: FL-7241.1
SHEET 1 OF 7

© 2008 R.W. BUILDING CONSULTANTS INC.

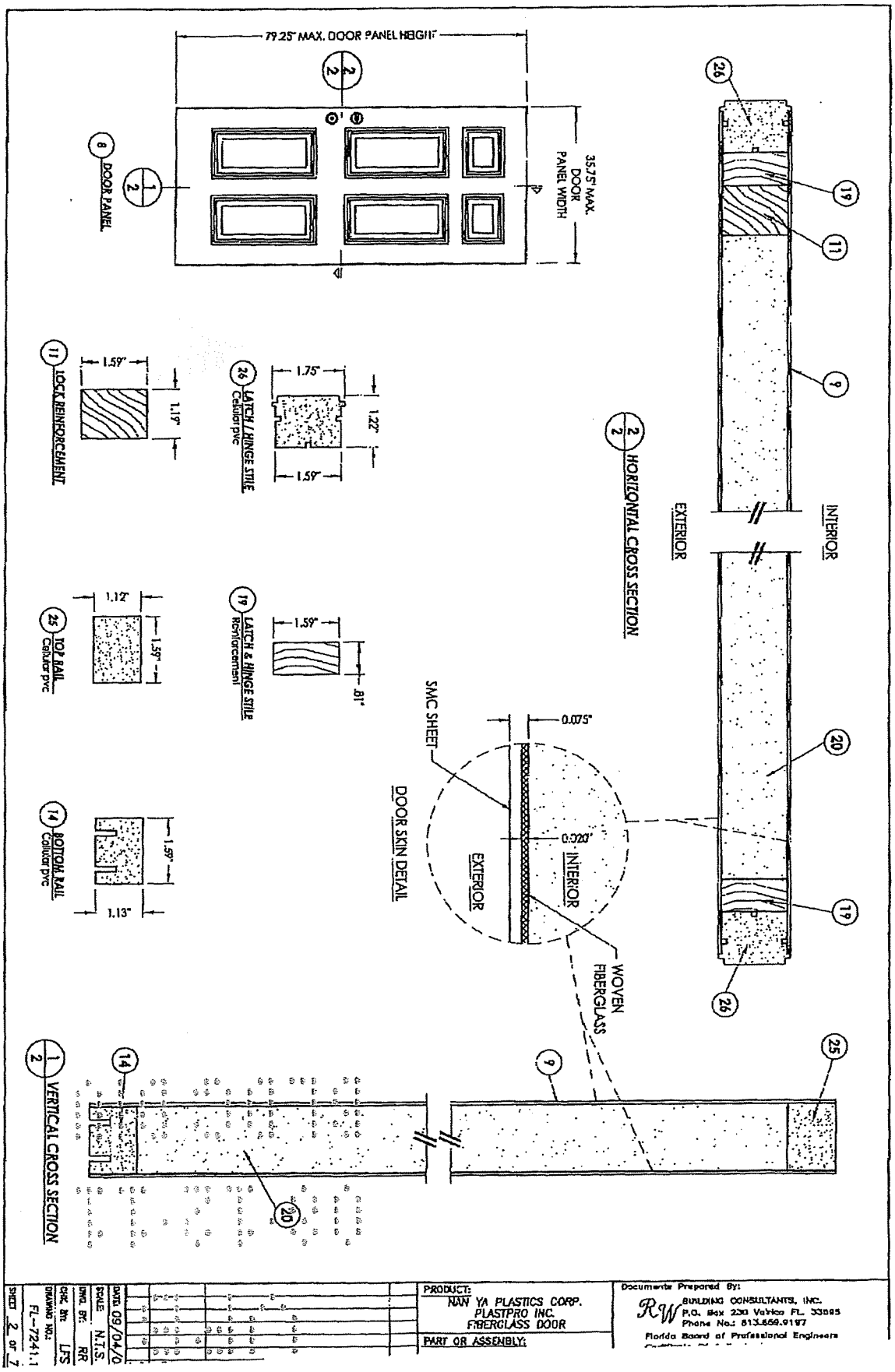
79.25" MAX. DOOR PANEL HEIGHT
35.75" MAX. DOOR PANEL WIDTH
8 DOOR PANEL
11 LOCK REINFORCEMENT
1.59"
1.19"
26 LATCH / HINGE STILE Cellular pvc
1.75"
1.22"
1.59"
25 TOP RAIL Cellular pvc
1.12"
1.59"
19 LATCH & HINGE STILE Reinforcement
1.59"
.81"
14 BOTTOM RAIL Cellular pvc
1.59"
1.13"
2 HORIZONTAL CROSS SECTION
EXTERIOR
INTERIOR
SMC SHEET
0.075"
0.020"
DOOR SKIN DETAIL
EXTERIOR
INTERIOR
WOVEN FIBERGLASS
1 VERTICAL CROSS SECTION
DATE: 09/04/0
SCALE: N.T.S.
DWG. BY: RR
CHK. BY: LFS
DRAWING NO.: FL-7241.1
SHEET 2 OF 7
PRODUCT: NAN YA PLASTICS CORP. PLASTPRO INC. FIBERGLASS DOOR
PART OR ASSEMBLY:
Documents Prepared By:
RW BUILDING CONSULTANTS, INC.
P.O. Box 230 Valrico FL. 33595
Phone No.: 813.659.9197
Florida Board of Professional Engineers

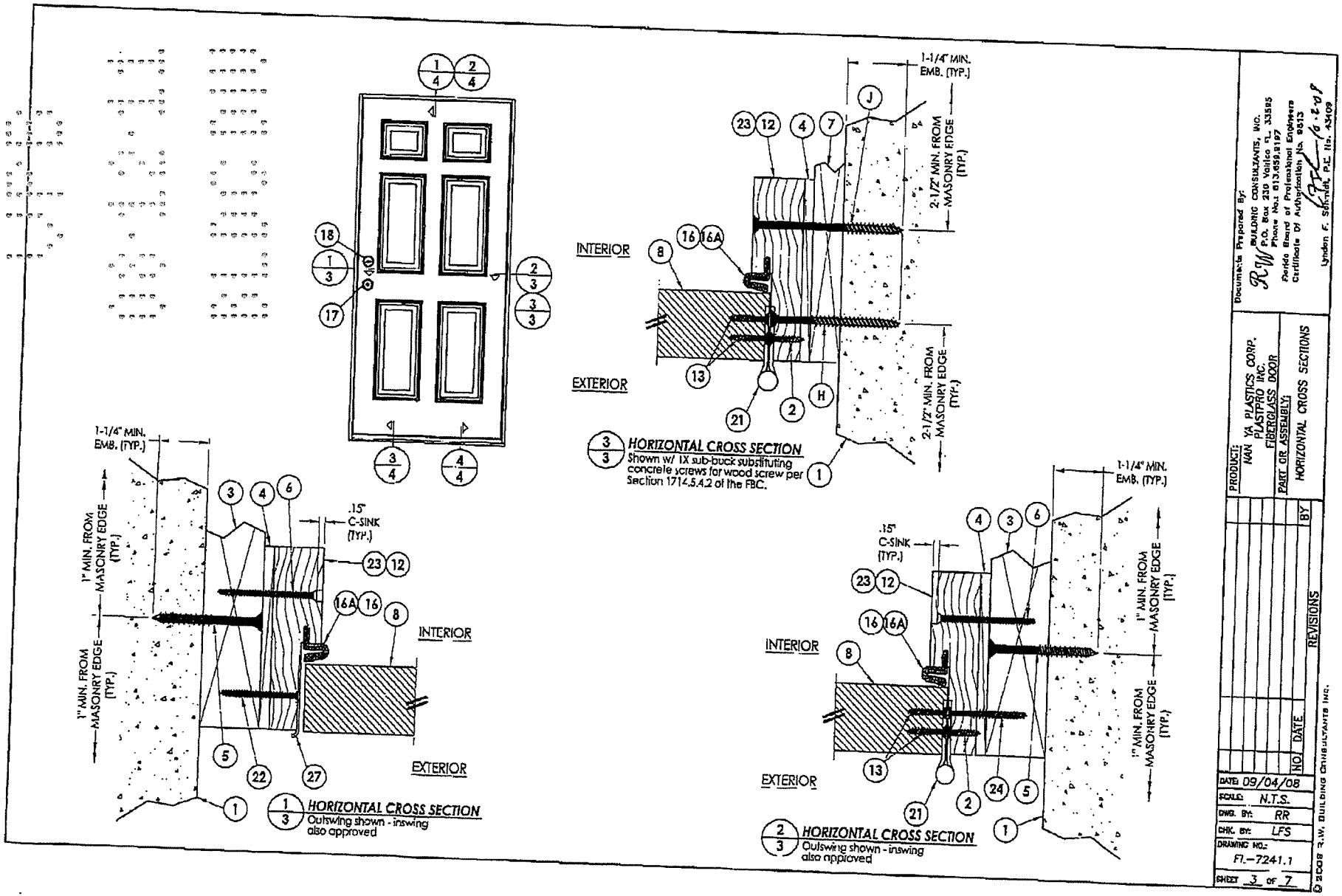
1-1/4" MIN. EMB. (TYP.)
2-1/2" MIN. FROM MASONRY EDGE (TYP.)
INTERIOR
EXTERIOR
3/3 HORIZONTAL CROSS SECTION
Shown w/ 1X sub-buck substituting concrete screws for wood screw per Section 1714.5.4.2 of the FBC.
1" MIN. FROM MASONRY EDGE (TYP.)
.15" C-SINK (TYP.)
1/3 HORIZONTAL CROSS SECTION
Outswing shown - inswing also approved
2/3 HORIZONTAL CROSS SECTION
Outswing shown - inswing also approved
Documents Prepared By:
BUILDING CONSULTANTS, INC.
P.O. Box 230 Valrico FL 33595
Phone No.: 813.659.9197
Florida Board of Professional Engineers Certificate Of Authorization No. 9513
Lyndon F. Schmidt, P.E. No. 43409
PRODUCT: NAN YA PLASTICS CORP. PLASTPRO INC. FIBERGLASS DOOR
PART OR ASSEMBLY:
HORIZONTAL CROSS SECTIONS
NO. DATE BY REVISIONS
DATE: 09/04/08
SCALE: N.T.S.
DWG. BY: RR
CHK. BY: LFS
DRAWING NO.: FL-7241.1
SHEET 3 OF 7
© 2008 R.W. BUILDING CONSULTANTS INC.

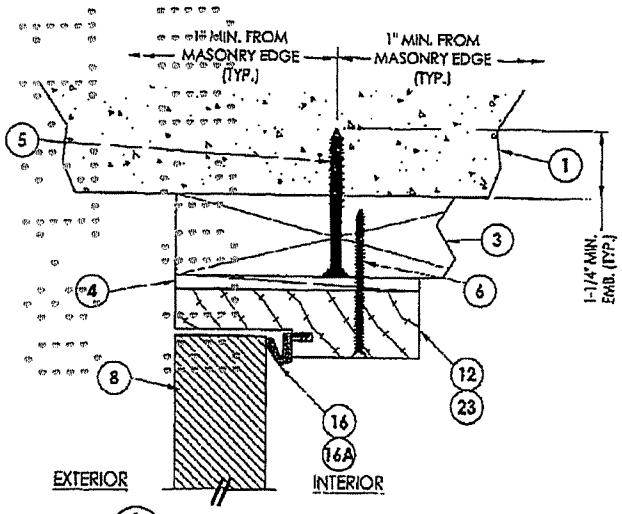

1/4 VERTICAL CROSS SECTION
Outswing shown - inswing also approved

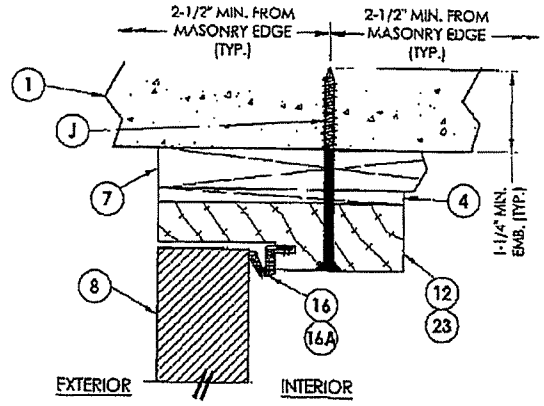

2/4 VERTICAL CROSS SECTION
Shown w/1X sub-buck substituting concrete screws for wood screws per Section 1714.5.4.2 of the FBC

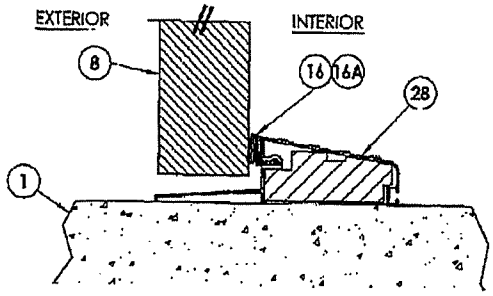

3/4 VERTICAL CROSS SECTION
Outswing configuration
See general notes, sheet 1 for "HVHZ" water infiltration requirements

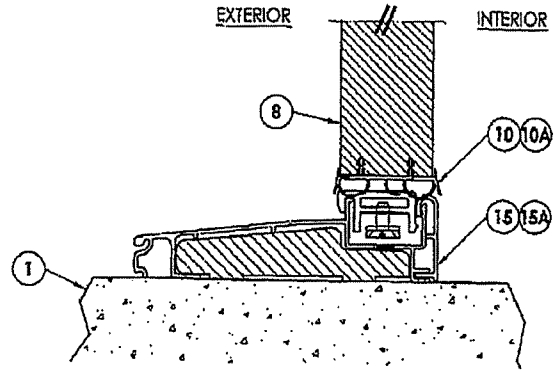

4/4 VERTICAL CROSS SECTION
Inswing configuration
See general notes, sheet 1 for "HVHZ" water infiltration requirements

Documents Prepared By:
BUILDING CONSULTANTS, INC.
P.O. Box 230 Valrico FL 33595
Phone No.: 813.689.9197
Florida Board of Professional Engineers Certificate Of Authorization No. 8813
Lyndon F. Schmidt, P.E. No. 43409

PRODUCT: HAN YA PLASTICS CORP. PLASTPRO INC. FIBERGLASS DOOR
PART OR ASSEMBLY: VERTICAL CROSS SECTIONS

NO.	DATE	BY

REVISIONS

DATE: 09/04/08
SCALE: N.T.S.
DWG. BY: RR
CHK. BY: LFS
DRAWING NO.: FL-7241.1
SHEET 4 OF 7

© 2008 R.W. BUILDING CONSULTANTS INC.

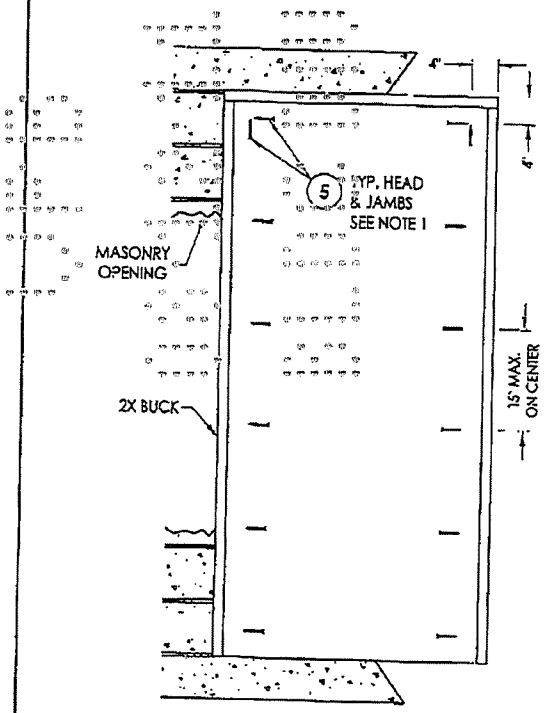

BUCK ANCHORING

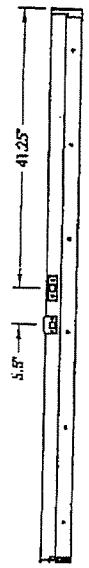

STRIKE JAMB

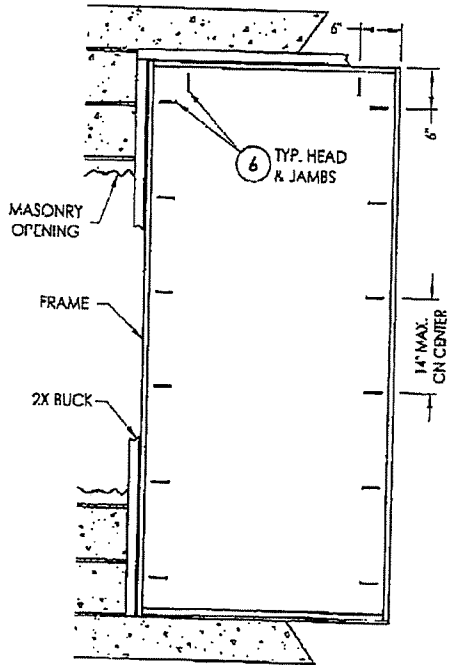

FRAME ANCHORING
Masonry 2X buck construction

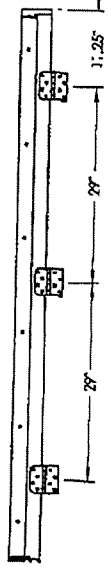

HINGE JAMB

NOTES:

1. 1/4" Elco concrete screws anchoring 2x buck require a minimum 1" clearance to masonry edges, a 1-1/4" minimum embedment and a minimum 4" clearance to adjacent concrete screws. Substitution of equal concrete screws from a different supplier may have different edge distance and center distance requirements. Concrete screw locations at the corners may be adjusted to maintain the minimum edge distance to mortar joints. If concrete screw locations noted as "MAX. ON CENTER" must be adjusted to maintain the minimum edge distance to mortar joints, additional concrete screws may be required to ensure the maximum on center dimension is not exceeded.

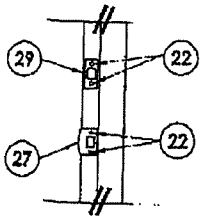

LATCH & DEADBOLT DETAIL

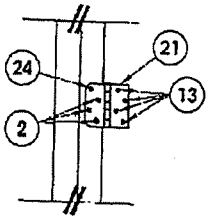

HINGE DETAIL

Documents Prepared By:
R.W. BUILDING CONSULTANTS, INC.
P.O. Box 230 Valrico FL 33595
Phone No.: 813.689.8187
Florida Board of Professional Engineers
Certificate Of Authorization No. 9613
Lyndon F. Schmidt, P.E. No. 43408

PRODUCT: NAN YA PLASTICS CORP. PLASTRO INC. FIBERGLASS DOOR
PART OR ASSEMBLY: BUCK AND FRAME ANCHORING 2X BUCK MASONRY CONSTRUCTION

NO	DATE	REVISIONS	BY

DATE: 09/04/08
SCALE: N.T.S.
DWG. BY: RR
CHK. BY: LFS
DRAWING NO.: FL-7241.1
SHEET 5 OF 7

© 2008 R.W. BUILDING CONSULTANTS INC.

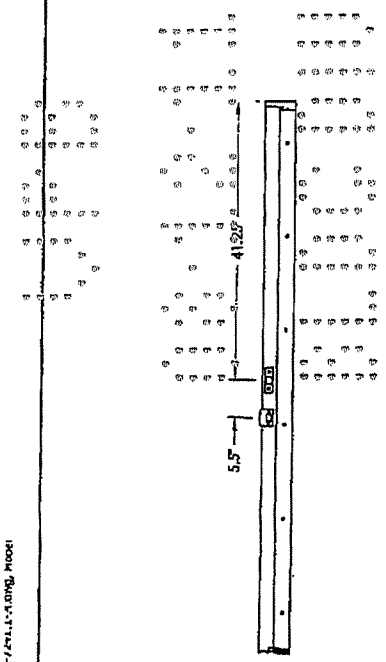

STRIKE JAMB

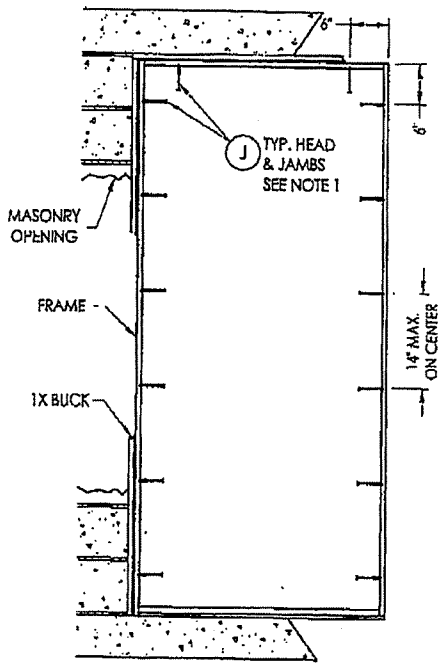

FRAME ANCHORING
Masonry 1X buck construction

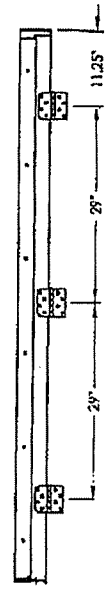

HINGE JAMB

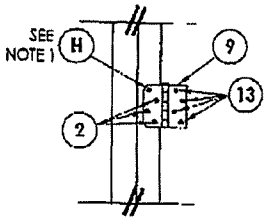

HINGE DETAIL

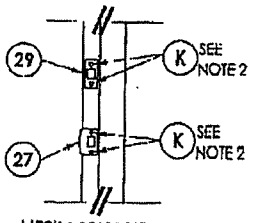

LATCH & DEADBOLT DETAIL

NOTES:

1. 1/4" ITW concrete screws anchoring frame and/or sill require a minimum 2-1/2" clearance to masonry edges, a 1-1/4" minimum embedment and a minimum 3" clearance to adjacent concrete screws. Substitution of equal concrete screws from a different supplier may have different edge distance and center distance requirements. Concrete screw locations at the corners may be adjusted to maintain the minimum edge distance to mortar joints. If concrete screw locations noted as "MAX. ON CENTER" must be adjusted to maintain the minimum edge distance to mortar joints, additional concrete screws may be required to ensure the maximum on center dimension is not exceeded.
2. 3/16" ITW concrete screws anchoring frame and/or sill require a minimum 2-5/8" clearance to masonry edges, a 1-1/4" minimum embedment and a minimum 2-1/4" clearance to adjacent concrete screws unless otherwise noted by concrete screw manufacturer.

Documents Prepared By:
RW BUILDING CONSULTANTS, INC.
P.O. Box 230 Yankee FL 33595
Phone No.: 813.859.9197
Florida Board of Professional Engineers
Certificate Of Authorization No. 9813
Lyndon F. Schmidt, P.E. No. 43439

PRODUCT: NAN YA PLASTICS CORP. PLASTPRO INC. FIBERGLASS DOOR
PART OR ASSEMBLY: FRAME ANCHORING 1X BUCK MASONRY CONSTRUCTION

NO.	DATE	BY

REVISIONS

DATE: 09/04/08
SCALE: N.T.S.
DWG. BY: RR
CHK. BY: LFS
DRAWING NO.: FL-7241.1
SHEET 6 OF 7

© RCOS R.W. BUILDING CONSULTANTS INC.

BILL OF MATERIALS

ITEM	DESCRIPTION	MATERIAL
H	1/4" X 3-1/4" PFH ITW CONCRETE SCREW	STEEL
J	1/4" X 3-3/4" PFH ITW CONCRETE SCREW	STEEL
K	3/16" X 3-1/4" PFH ITW CONCRETE SCREW	STEEL
1	MASONRY - 3,192 PSI MIN. CONCRETE CONFORMING TO ACI 301 OR HOLLOW BLOCK CONFORMING TO ASTM C90	CONCRETE
2	#9 X 3/4" PFH WOOD SCREW	STEEL
3	2X BUCK SG >= 0.55	WOOD
4	1/4" MAX. SHIM SPACE	-
5	1/4" X 2-3/4" PFH ELCO CONCRETE SCREW	STEEL
6	#8 X 2-1/2" PFH WOOD SCREW	STEEL
7	1X BUCK SG >= 0.55	WOOD
8	DOOR PANEL	-
9	DOOR SKIN (MIN. 0.075" THICK) BY NAN YA	FIBERGLASS
10	INSWING VINYL DOOR BOTTOM SWEEP BY ENDURA	VINYL
10A	VINYL DOOR BOTTOM SWEEP #3628 BY HOLM IND.	VINYL
11	REINFORCEMENT WOOD FOR LOCKS	WOOD
12	FINGER JOINTED PINE FRAME, HEAD & HINGE JAMBS	WOOD
13	#9 X 1" PFH WOOD SCREW	STEEL
14	BOTTOM RAIL	CELLULAR PVC
15	INSWING ADJUSTABLE THRESHOLD BY ENDURA	ALUM. / WOOD
15A	INSWING ADJUSTABLE THRESHOLD BY DLP	ALUM. / WOOD
16	FORCE 5 WEATHER STRIPPING BY ENDURA	FOAM
16A	COMPRESSION WEATHER STRIP QLON 650 BY SCHLEGEL	FOAM
17	KWIKSET KEYED ENTRY GRADE 2	STEEL
18	KWIKSET DEADBOLT GRADE 2	STEEL
19	CONTINUOUS LATCH AND HINGE STILE REINFORCEMENT	WOOD
20	POLYURETHANE FOAM BY NAN YA	POLYURETHANE
21	4" X 4" BUTT HINGE	STEEL
22	#8 X 2" PFH WOOD SCREW	STEEL
23	POLY FIBER JAMB	COMP./ VINYL
24	#10 X 2" PFH WOOD SCREW	STEEL
25	TOP RAIL	CELLULAR PVC
26	HINGE & LATCH STILE	CELLULAR PVC
27	STRIKE PLATE	STEEL
28	OUTSWING BUMP THRESHOLD	ALUM.
29	DEADBOLT PLATE	STEEL

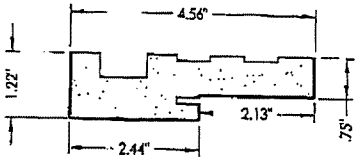

23 POLY FIBER JAMB

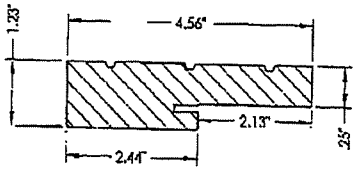

12 4-9/16" JAMB
Finger joint pine

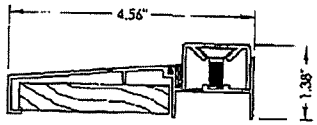

15A ADJUSTABLE INSWING THRESHOLD

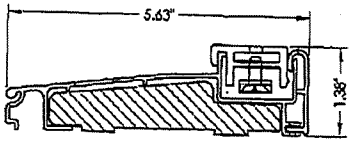

15 ADJUSTABLE INSWING THRESHOLD

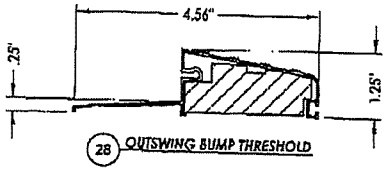

28 OUTSWING BUMP THRESHOLD

Documents Prepared By:
R.W. BUILDING CONSULTANTS, INC.
P.O. Box 230 Valrico FL. 33595
Phone No.: 813.659.9197
Florida Board of Professional Engineers
Certificate Of Authorization No. 0813
Lyndon F. Schmitt, P.E. No. 43409

PRODUCT: NAN YA PLASTICS CORP. PLASTPRO INC. FIBERGLASS DOOR

PART OR ASSEMBLY: BILL OF MATERIALS & COMPONENTS

NO.	DATE	BY

REVISIONS

DATE: 09/04/08
SCALE: N.T.S.
DWG. BY: RR
CHK. BY: LFS
DRAWING NO.: FL-7241.1
SHEET 7 OF 7

© 2008 R.W. BUILDING CONSULTANTS INC.

NAN YA PLASTICS CORP.
PLASTPRO INC.

9 PEACH TREE HILL ROAD
LIVINGSTON, NEW JERSEY 07039

DISTINCTION SERIES
OPAQUE FIBERGLASS DOORS
INSWING / OUTSWING
"IMPACT"

GENERAL NOTES:

1. This product has been evaluated and is in compliance with the 2007 Florida Building Code (FBC) structural requirements including the "High Velocity Hurricane Zone" (HVHZ).
2. Product anchors shall be as listed and spaced as shown on details. Anchor embedment to base material shall be beyond wall dressing or stucco.
3. When used in the "HVHZ" this product complies with section 1626 of the Florida Building Code and does not require an impact resistant covering.
4. When used in areas outside of the "HVHZ" requiring wind borne debris protection this product complies with Section 1609.1.2 of the 2007 FBC and does not require an impact resistant covering. This product meets missile level "D" and includes Wind Zone 4 as defined in ASTM E1996.
5. For 2x stud framing construction, anchoring of these units shall be the same as that shown for 2x buck masonry construction.
6. Site conditions that deviate from the details of this drawing require further engineering analysis by a licensed engineer or registered architect.
7. Outswing configurations meet water infiltration requirements for "HVHZ".
8. Inswing configurations do not meet the water infiltration requirements for the "HVHZ". Inswing units shall be installed only in non-habitable areas or at habitable locations protected by an overhang or canopy such that the angle between the edge of canopy or overhang to sill is less than 45 degrees.

TABLE OF CONTENTS

SHEET #	DESCRIPTION
1	Typical elevation, design pressures, & general notes
2	Door panel details
3	Horizontal cross sections
4	Vertical cross sections
5	Buck and frame anchoring - 2X buck masonry construction
6	Frame anchoring - 1X buck masonry construction
7	Endura astragal details
8	Bill of materials & components

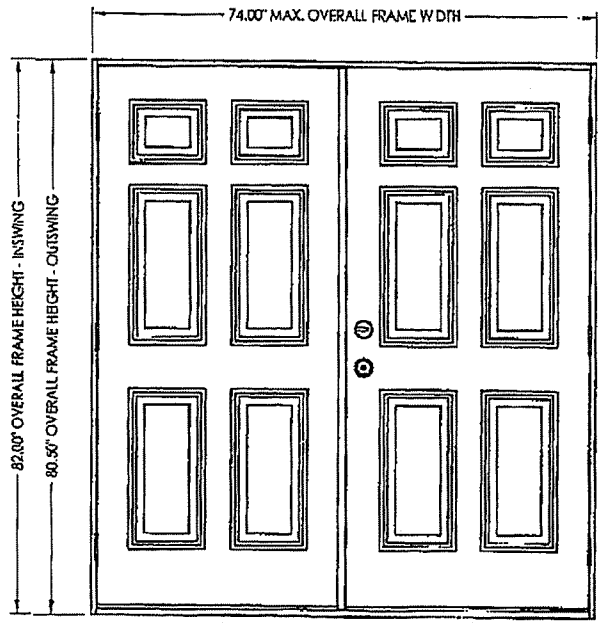

SWING	MAX FRAME DIMENSION	DESIGN PRESSURE (PSF) POSITIVE	NEGATIVE
INSWING	74.00" x 82.00"	+47.5	-47.5
OUTSWING	74.00" x 80.50"	+50.0	-50.0

Documents Prepared By:
RW BUILDING CONSULTANTS, INC.
P.O. Box 230 Valrico FL. 33595
Phone No: 813.939.9197
Florida Board of Professional Engineers
Certificate Of Authorization No. 8815
Lyndon F. Schmidt, P.E. No. 43409
16-2-08

PRODUCT: NAN YA PLASTICS CORP. PLASTPRO INC. FIBERGLASS DOOR
PART OR ASSEMBLY: TYPICAL ELEVATION, DESIGN PRESSURES & GENERAL NOTES

NO.	DATE	REVISIONS	BY

DATE: 09/04/08
SCALE: N.T.S.
DWG. BY: RR
CHK. BY: LFS
DRAWING NO.: FL-7241.2
SHEET 1 OF 8

© 2008 R.W. BUILDING CONSULTANTS INC.

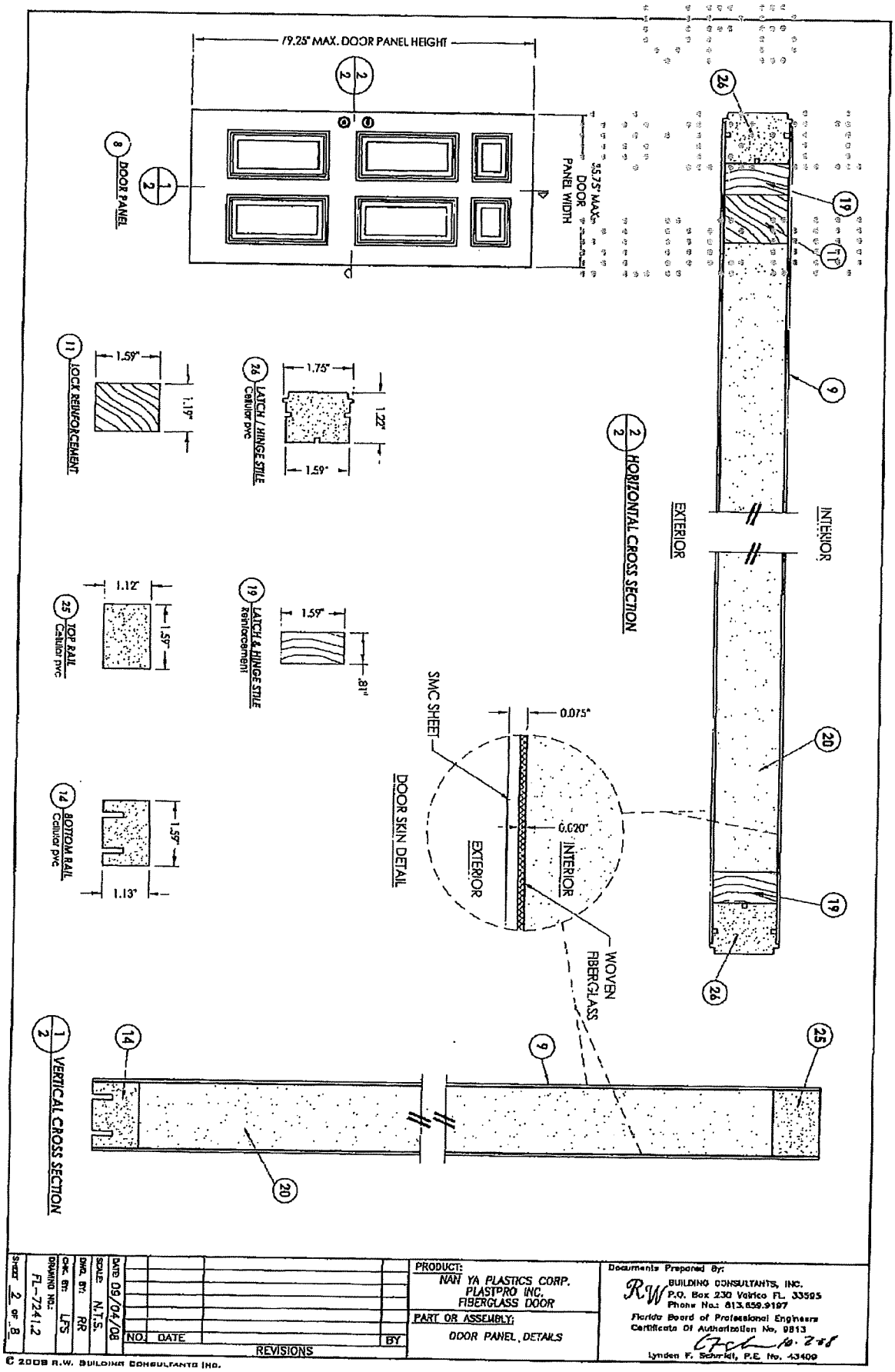

DATE: 09/04/08	NO.	DATE	BY
SCALE: N.T.S.		REVISIONS	
DWG. BY: RR			
CHK. BY: LFS			
DRAWING NO.: FL-7241.2			
SHEET 2 OF 8			

PRODUCT:
NAN YA PLASTICS CORP.
PLASTPRO INC.
FIBERGLASS DOOR

PART OR ASSEMBLY:
DOOR PANEL, DETAILS

Documents Prepared By:
RW BUILDING CONSULTANTS, INC.
P.O. Box 230 Valrico FL. 33595
Phone No.: 813.659.9197
Florida Board of Professional Engineers
Certificate Of Authorization No. 9813
10-2-08
Lynden F. Schmidt, P.E. No. 43409

© 2008 R.W. BUILDING CONSULTANTS INC.

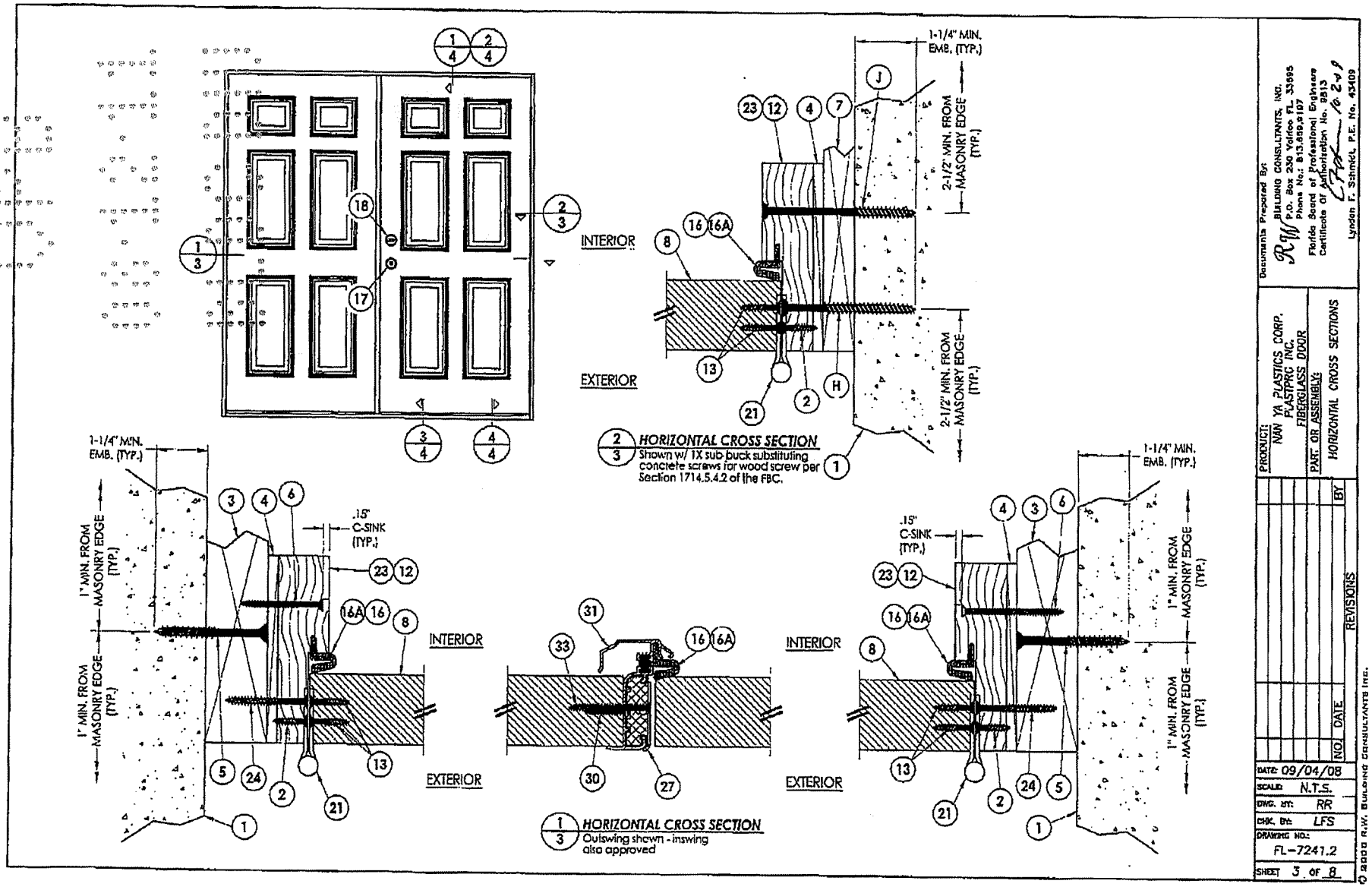

Documents Prepared By:
RW BUILDING CONSULTANTS, INC.
P.O. Box 230 Yulee FL 32097
Phone No.: 813.659.9197
Florida Board of Professional Engineers
Certificate Of Authorization No. 8813
Lyndon F. Schmidt, P.E. No. 43409

PRODUCT: NAN YA PLASTICS CORP. PLASTPRO INC. FIBERGLASS DOOR
PART OR ASSEMBLY: HORIZONTAL CROSS SECTIONS

NO.	DATE	REVISIONS	BY

DATE: 09/04/08
SCALE: N.T.S.
DWG. BY: RR
CHK. BY: LFS
DRAWING NO.: FL-7241.2
SHEET 3 OF 8

© 2008 R.W. BUILDING CONSULTANTS INC.

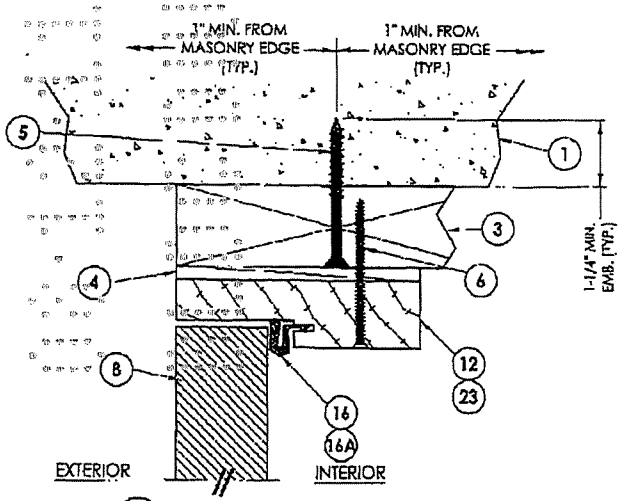

1/4 VERTICAL CROSS SECTION
Outswing shown - Inswing also approved

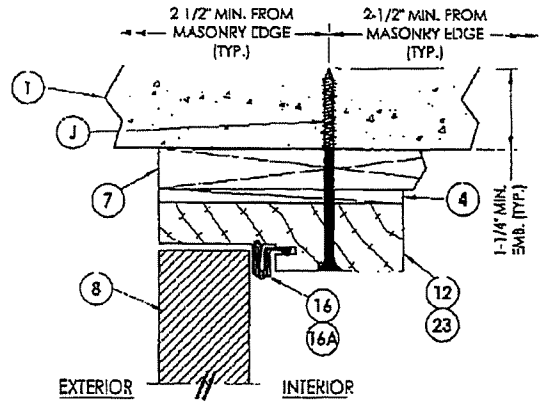

2/4 VERTICAL CROSS SECTION
Shown w/1X sub buck substituting concrete screws for wood screws per Section 1/14.5.4.2 of the FBC

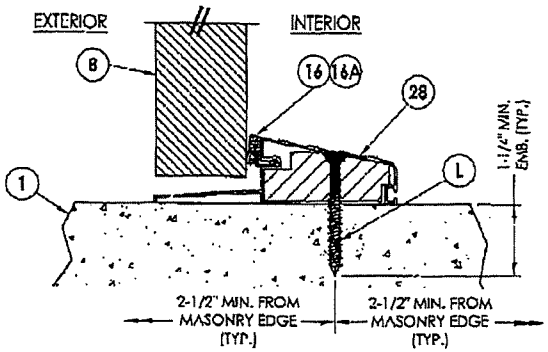

3/4 VERTICAL CROSS SECTION
Outswing configuration
See general notes, sheet 1 for "HVHZ" water infiltration requirements

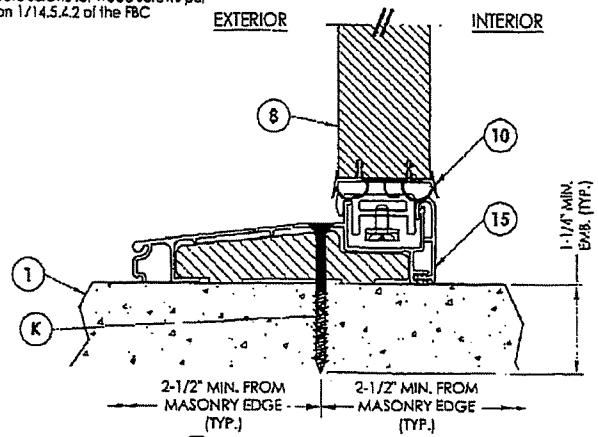

4/4 VERTICAL CROSS SECTION
Inswing configuration
See general notes, sheet 1 for "HVHZ" water infiltration requirements

Documents Prepared By:
BUILDING CONSULTANTS, INC.
P.O. Box 230 Valrico FL 33595
Phone No.: 813.659.9167
Florida Board of Professional Engineers Certificate of Authorization No. 18913
Lyndon F. Schmidt, P.E. No. 43409

PRODUCT: NAN YA PLASTICS CORP. PLASTPRO INC. FIBERGLASS DOOR
PART OR ASSEMBLY: VERTICAL CROSS SECTIONS

NO.	DATE	REVISIONS	BY

DATE: 09/04/08
SCALE: N.T.S.
DWG. BY: RR
CHK. BY: LFS
DRAWING NO.: FL-7241.2
SHEET 4 OF 8

© 2008 R.W. BUILDING CONSULTANTS INC.

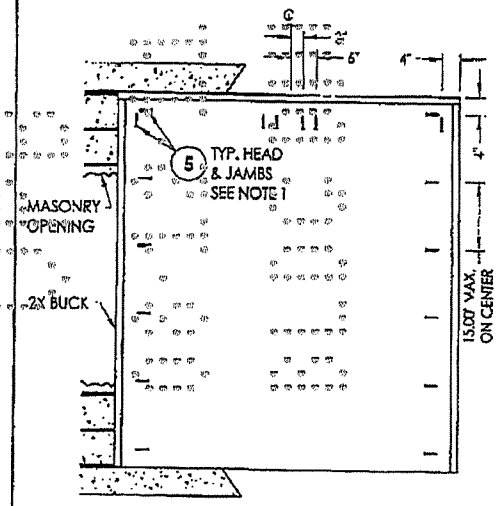

BUCK ANCHORING

ASTRAGAL STRIKE JAMB

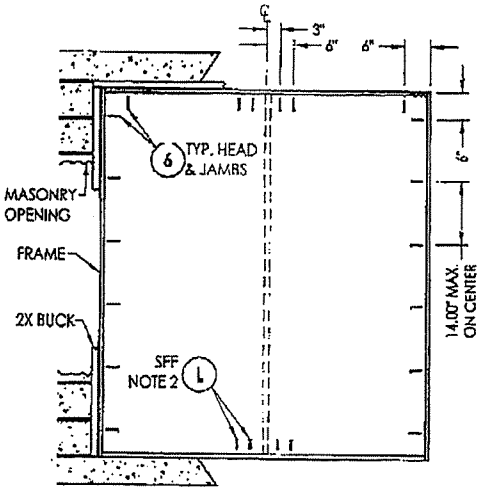

FRAME ANCHORING
Masonry 2X buck construction

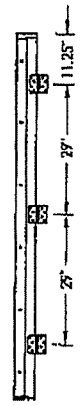

HINGE JAMB

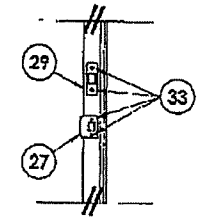

LATCH & DEAD BOLT DETAIL

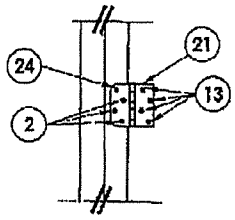

HINGE DETAIL

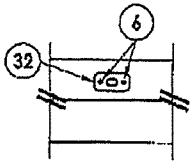

DETAIL 2
Attach astragal throw bolt strike plate to frame as shown

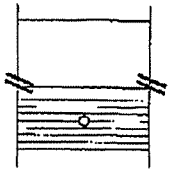

DETAIL 1
Astragal throw bolts at the threshold (Outswing)

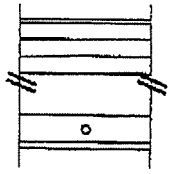

DETAIL 1
Astragal throw bolts at the threshold (Inswing)

NOTES:

1. 1/4" Elco concrete screws anchoring 2x buck require a minimum 1" clearance to masonry edges, a 1-1/4" minimum embedment and a minimum 4" clearance to adjacent concrete screws. Substitution of equal concrete screws from a different supplier may have different edge distance and center distance requirements. Concrete screw locations at the corners and at astragal locations may be adjusted to maintain the minimum edge distance to mortar joints. If concrete screw locations noted as "MAX. ON CENTER" must be adjusted to maintain the minimum edge distance to mortar joints, additional concrete screws may be required to ensure the maximum on center dimension is not exceeded.

2. 1/4" ITW concrete screws anchoring frame and/or sill require a minimum 2-1/2" clearance to masonry edges, a 1-1/4" minimum embedment and a minimum 3" clearance to adjacent concrete screws. Substitution of equal concrete screws from a different supplier may have different edge distance and center distance requirements. Concrete screw locations at the corners and at astragal locations may be adjusted to maintain the minimum edge distance to mortar joints. If concrete screw locations noted as "MAX. ON CENTER" must be adjusted to maintain the minimum edge distance to mortar joints, additional concrete screws may be required to ensure the maximum on center dimension is not exceeded.

Documents Prepared By:
R.W. BUILDING CONSULTANTS, INC.
P.O. Box 230 Valrico FL 33595
Phone No.: 813.659.9187
Florida Board of Professional Engineers Certificate of Authorization No. 8813
Lyndon F. Schmidt, P.E. No. 43409
10-2-08

PRODUCT: NAN YA PLASTICS CORP. PLASTPRO INC. FIBERGLASS DOOR
PART OR ASSEMBLY: BUCK AND FRAME ANCHORING 2X BUCK MASONRY CONSTRUCTION

NO.	DATE	BY	REVISIONS

DATE: 09/04/08
SCALE: N.T.S.
DWG. BY: RR
CHK. BY: LFS
DRAWING NO.: FL-7241.2
SHEET 5 OF 8

© 2008 R.W. BUILDING CONSULTANTS INC.

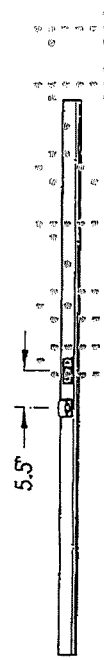

ASTRAGAL STRIKE JAMB

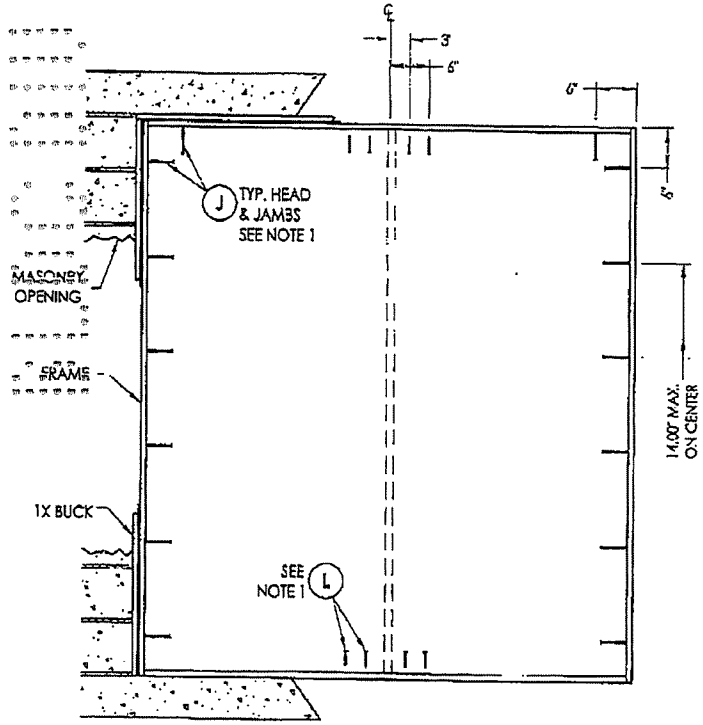

FRAME ANCHORING
Masonry 1X buck construction

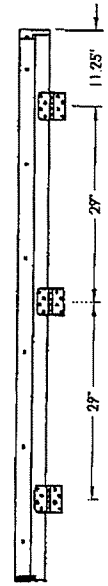

HINGE JAMB

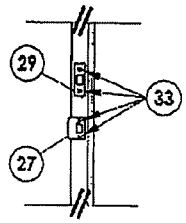

LATCH & DEAD BOLT DETAIL

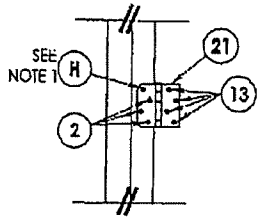

HINGE DETAIL

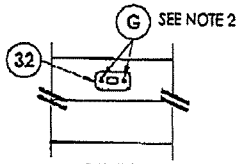

DETAIL 2
Attach astragal throw bolt strike plate to frame as shown

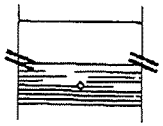

DETAIL 1
Astragal throw bolts at the threshold (Outswing)

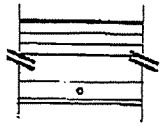

DETAIL 1
Astragal throw bolts at the threshold (Inswing)

NOTES:

1. 1/4" ITW concrete screws anchoring frame and/or sill require a minimum 2-1/2" clearance to masonry edges, a 1-1/4" minimum embedment and a minimum 3" clearance to adjacent concrete screws. Substitution of equal concrete screws from a different supplier may have different edge distance and center distance requirements. Concrete screw locations at the corners and at astragal locations may be adjusted to maintain the minimum edge distance to mortar joints. If concrete screw locations noted as "MAX. ON CENTER" must be adjusted to maintain the minimum edge distance to mortar joints, additional concrete screws may be required to ensure the maximum on center dimension is not exceeded.

2. 3/16" ITW concrete screws anchoring frame and/or sill require a minimum 2 5/8" clearance to masonry edges, a 1-1/4" minimum embedment and a minimum 2-1/4" clearance to adjacent concrete screws unless otherwise noted by concrete screw manufacturer.

Documents Prepared By:
BUILDING CONSULTANTS, INC.
P.O. Box 230 Valrico FL 33595
Phone No.: 813.659.9197
Florida Board of Professional Engineers
Certificate of Authorization No. 9813
Lyndon F. Schmidt, P.E. No. 43409

PRODUCT: NAN YA PLASTICS CORP. PLASTPRO INC. FIBERGLASS DOOR
PART OR ASSEMBLY: FRAME ANCHORING 1X BUCK MASONRY CONSTRUCTION

NO	DATE	REVISIONS	BY

DATE: 09/04/08
SCALE: N.T.S.
DWG. BY: RR
CHK. BY: LFS
DRAWING NO.: FL--7241.2
SHEET 6 OF 8

© 2008 R.W. BUILDING CONSULTANTS INC.

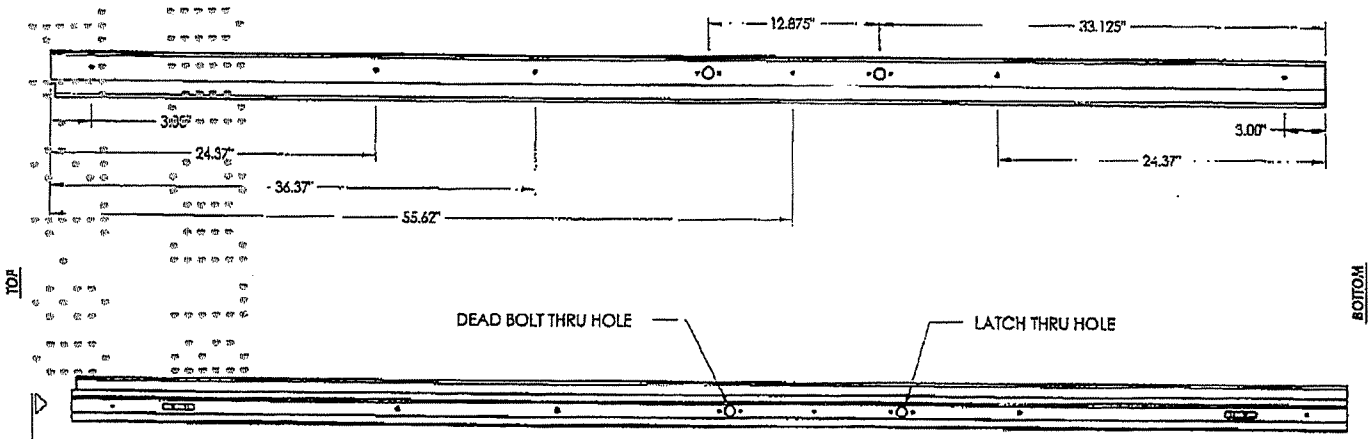

8'0" ALUMINUM ASTRAGAL ASSEMBLY
By Endura Product

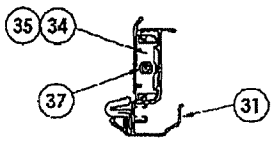

VIEW A-A
Aluminum Astragal Assembly

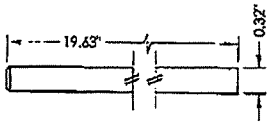

37 SLIDE BOLT ROD
MATL: Steel

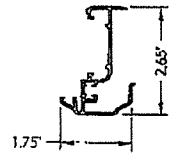

31 ALUMINUM ASTRAGAL
By Endura Product

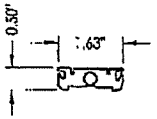

35 TOP BOLT RETAINER
MATL: 9-3/4" Aluminum

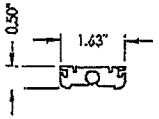

34 TOP BOLT RETAINER
MATL: 4-3/4" HDPE

Documents Prepared By:
RW BUILDING CONSULTANTS, INC.
P.O. Box 230 Yulee FL 32097
Phone No.: 813.650.9197
Florida Board of Professional Engineers
Certificate of Authorization No. 8513
Lyndon F. Schmidt, P.E. No. 43409

PRODUCT: NAN YA PLASTICS CORP. PLASTPRO INC. FIBERGLASS DOOR
PART OR ASSEMBLY: ENDURA ASTRAGAL DETAILS

NO.	DATE	REVISIONS	BY

DATE: 09/04/08
SCALE: N.T.S.
DWG. BY: RR
CHK. BY: LFS
DRAWING NO.: FL-7241.2
SHEET 7 OF 8

© 2008 R.W. BUILDING CONSULTANTS INC.

BILL OF MATERIALS

ITEM	DESCRIPTION	MATERIAL
G	3/16" X 3-1/4" PFH ITW CONCRETE SCREW	STEEL
H	1/4" X 3-1/4" PFH ITW CONCRETE SCREW	STEEL
J	1/4" X 3-3/4" PFH ITW CONCRETE SCREW	STEEL
K	1/4" X 2-3/4" PFH ITW CONCRETE SCREW	STEEL
L	1/4" X 2-1/4" PFH ITW CONCRETE SCREW	STEEL
1	MASONRY 3,192 PSI MIN. CONCRETE CONFORMING TO ACI 301 OR HOLLOW BLOCK CONFORMING TO ASTM C90	CONCRETE
2	#9 X 3/4" PFH WOOD SCREW	STEEL
3	2X BUCK SG >= 0.55	WOOD
4	1/4" MAX. SHIM SPACE	-
5	1/4" X 2-3/4" PFH ELCO CONCREIE SCREW	STEEL
6	#8 X 2-1/2" PFH WOOD SCREW	STEEL
7	1X BUCK SG >= 0.55	WOOD
8	DOOR PANEL	-
9	DOOR SKIN (MIN. 0.075" THICK) BY NAN YA	FIBERGLASS
10	INSWING VINYL DOOR BOTTOM SWEEP BY ENDURA	VINYL
11	REINFORCEMENT WOOD FOR LOCKS	WOOD
12	FINGER JOINTED PINE FRAME, HEAD & HINGE JAMBS	WOOD
13	#9 X 1" PFH WOOD SCREW	STEEL
14	BOTTOM RAIL	CE.LULAR PVC
15	INSWING ADJUSTABLE THRESHOLD BY ENDURA	ALUM. / WOOD
16	FORCE 5 WEATHER STRIPPING BY ENDURA	FOAM
16A	COMPRESSION WEATHER STRIP QLON 650 BY SCHLEGEL	FOAM
17	KWIKSET KEYED ENTRY GRADE 2	STEEL
18	KWIKSET DEADBOLT GRADE 2	STEEL
19	CONTINUOUS LATCH AND HINGE STILE REINFORCEMENT	WOOD
20	POLYURETHANE FOAM BY NAN YA	POLYURETHANE
21	4" X 4" BUTT HINGE	STEEL
23	POLY FIBER JAMB	COMP./ VINYL
24	#10 X 2" PFH WOOD SCREW	STEEL
25	TOP RAIL	CELLULAR PVC
26	HINGE & LATCH STILE	CELLULAR PVC
27	STRIKE PLATE	STEEL
28	OUTSWING BUMP THRESHOLD	ALUM.
29	DEAD BOLT PLATE	STEEL
30	#8 X 1" PHILLIPS FLAT HEAD WOOD SCREW	STEEL
31	EXTRUDED ALUMINUM "ULTIMATE ASTRAGAL" BY ENDURA	ALUM.
32	ASTRAGAL STRIKE PLATE	STEEL
33	#8 X 2" PFH SCREW	STEEL
34	4-3/4" LENGTH TOP BOLT RETAINER	HDPE
35	9-8/4" LENGTH TOP BOLT RETAINER	ALUMINUM
37	SLIDE BOLT ROD	STEEL

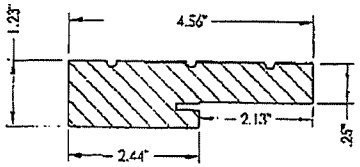

(12) 4-9/16" JAMB
Finger joint pine

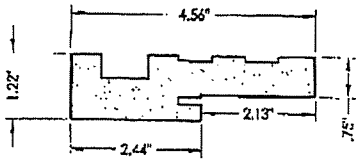

(23) POLY FIBER JAMB

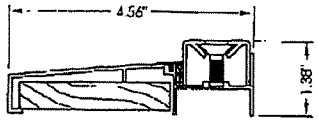

(15A) ADJUSTABLE INSWING THRESHOLD

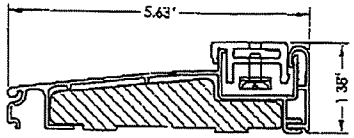

(15) ADJUSTABLE INSWING THRESHOLD

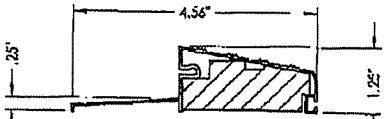

(28) OUTSWING BUMP THRESHOLD

Documents Prepared by:
RW BUILDING CONSULTANTS, INC.
P.O. Box 230 Valrico FL 33595
Phone No.: 813.659.8107
Florida Board of Professional Engineers
Certificate of Authorization No. 8813
Lyndon F. Schmidt, P.E. No. 43409

PRODUCT: NAN YA PLASTICS CORP. PLASTPRO INC. FIBERGLASS DOOR

PART OR ASSEMBLY: BILL OF MATERIALS & COMPONENTS

NO.	DATE	REVISIONS	BY

DATE: 09/04/08
SCALE: N.T.S.
DWG. BY: RR
CHK. BY: LFS
DRAWING NO.: FL-7241.2
SHEET 8 OF 8

© 2008 R.W. BUILDING CONSULTANTS INC.

STATE OF FLORIDA

DEPARTMENT OF COMMUNITY AFFAIRS

"Dedicated to making Florida a better place to call home"

JEB BUSH
Governor

THADDEUS L. COHEN, AIA
Secretary

MEMORANDUM

Florida Building Commission
Raul L. Rodriguez, AIA, Chairman

Date: December 6, 2006

Re: Demonstration of Product Compliance for the High Velocity Hurricane Zone and Other Areas Accepting "NOA's"

Florida Statutes, section 553.842, govern local and state approval of building products directly related to the structural wind resistance of buildings. The law establishes specific methods for manufacturers to demonstrate compliance with the Florida Building Code but gives the manufacturer the option of obtaining either local or state approval. State approved products must be accepted by local jurisdictions within the limitations of use established by the state approval without requirement for further testing, evaluation or submission of evidence. (Florida Statute, section 553.842(4) Products or methods or systems of construction requiring approval under s. 553.77 must be approved by one of the methods established in subsection (5) before their use in construction in this state. Products may be approved by the commission for statewide use. Notwithstanding a local government's authority to amend the Florida Building Code as provided in this act, statewide approval shall preclude local jurisdictions from requiring further testing, evaluation, or submission of other evidence as a condition of using the product so long as the product is being used consistent with the conditions of its approval.) When a product is state approved the local jurisdiction's authority extends only to determining the product is being used within the conditions established by the approval.

State approval of products for use in the High Velocity Hurricane Zone (HVHZ) is commonly but not always based on a Miami-Dade Notice of Acceptance" (NOA). The law guarantees manufacturers other means of demonstrating compliance with HVHZ requirements so long as their products are tested or evaluated using the standards that apply in the HVHZ. The Miami-Dade Code Compliance Office reviews applications for state approval of HVHZ products and advise the Florida Building Commission on their compliance with HVHZ standards. Compliance can be determined by accessing the state approval online using the state approval number then checking the standards products were tested to and the "limitations of use" documentation.

Approval by the State or Miami-Dade County allows acceptance of a product for use within the HVHZ. However, the building permitting authority must determine whether products comply with the requirements of the Code specific to the building they are used in. The State or Miami-Dade approvals provide the information required for this determination. Further testing or engineering evaluation cannot be required unless the permit applicant wishes to demonstrate the product can be used outside of the approved limitations of use.

2555 SHUMARD OAK BOULEVARD TALLAHASSEE, FLORIDA 32399-2100
Phone: 850.488.8466/Suncom 278.8466 FAX: 850.921.0781/Suncom 291.0781
Internet address: http://www.dca.state.fl.us

R W B C

R W Building Consultants, Inc.

Consulting and Engineering Services for the Building Industry

P.O. Box 230 Valrico, FL 33595 Phone 813.659.9197 Facsimile 813.754.9989

Florida Board of Professional Engineers Certificate of Authorization No. 9813

Product Evaluation Report

Report No.:	FL 7241.1 R1
Date:	October 2, 2008
Product Category:	Exterior Doors
Product sub-category:	Swinging Exterior Door Assemblies
Product Name:	Distinction Series Opaque Fiberglass Door Inswing / Outswing "Impact"
Manufacturer:	Nan Ya Plastics Corporation Plastpro Inc. 9 Peach Tree Hill Road Livingston, NJ 07039 Phone: 800-779-0561 Facsimile: 973-758-4001

Scope: This is a Product Evaluation report issued by R W Building Consultants, Inc. and Lyndon F. Schmidt, P.E. (System ID # 1998) for Nan Ya Plastics Corporation, Plastpro Inc. based on Rule Chapter No. 9B-72.070, Method 1d of the State of Florida Product Approval, Department of Community Affairs-Florida Building Commission.

RW Building Consultants and Lyndon F. Schmidt, P.E. do not have nor will acquire financial interest in the company manufacturing or distributing the product or in any other entity involved in the approval process of the product named herein.

This product has been evaluated for use in locations adhering to the Florida Building Code (2007 Edition).

See Drawing No. FL-7241.1 prepared by R W Building Consultants, Inc. and signed and sealed by Lyndon F. Schmidt, P.E. (FL # 43409) for specific use parameters.

Lyndon F. Schmidt, P.E.
PE # 43409
October 2, 2008

Limitations

1. This product has been evaluated and is in compliance with the 2007 Florida Building Code (FBC) structural requirements including the "High Velocity Hurricane Zone" (HVHZ).

2. Product anchors shall be as listed and spaced as shown on details. Anchor embedment to base material shall be beyond wall dressing or stucco.

3. When used in the "HVHZ" this product complies with section 1626 of the Florida Building Code and does not require an impact resistant covering.

4. When used in areas outside of the "HVHZ" requiring wind borne debris protection this product complies with Section 1609.1.2 of the 2007 FBC and does not require an impact resistant covering. This product meets missile level "D" and includes Wind Zone 4 as defined in ASTM E1996.

5. For 2x stud framing construction, anchoring of these units shall be the same as that shown for 2x buck masonry construction.

6. Site conditions that deviate from the details of this drawing require further engineering analysis by a licensed engineer or registered architect.

7. Outswing configurations meet water infiltration requirements for "HVHZ".

8. Inswing configurations do not meet the water infiltration requirements for the "HVHZ". Inswing units shall be installed only in non-habitable areas or at habitable locations protected by an overhang or canopy such that the angle between the edge of canopy or overhang to sill is less than 45 degrees.

9. See drawing FL-7241.1 for size and design pressure limitations.

Lyndon F. Schmidt, P.E.
PE # 43409
October 2, 2008

Supporting Documents

A Drawing

1. Drawing No. FL-7241.1 prepared by R W Building Consultants, Inc. (Florida Board of Professional Engineers Certificate of Authorization No. 9813), signed and sealed by Lyndon F. Schmidt, P.E.

B Tests Performed

1. Testing per TAS 201-94, TAS 202-94 and TAS 203-94 as performed by Certified Testing Laboratories, and reported in test report number CTLA 924W, signed and sealed by Ramesh Patel, P.E.

2. Testing per TAS 201-94, TAS 202-94 and TAS 203-94 as performed by Certified Testing Laboratories, and reported in test report number CTLA 924W-1, signed and sealed by Ramesh Patel, P.E.

3. Testing per ASTM G26-95, ASTM D2843-99, ASTM D635-98, ASTM D1929-96(2001) and ASTM D638-03 as performed by ETC Laboratories and reported in test report number ETC-05-255-16776.1, signed and sealed by Joseph L. Doldan, P.E. ASTM G155-04 is referenced in the Florida Building Code; ASTM G26-95 Method A is equivalent to ASTM G155-04 Cycle 1 and meets the intent and purpose of the Florida Building Code as attested to in evaluation report FL7241-G26 prepared, signed and sealed by Lyndon F. Schmidt, P.E. Additionally, the Florida Building Code references ASTM D2565-00; the test conditions as reported in ETC-05-255-16776.1 and the calculation of the property retention index (PRI) meet the requirements of ASTM D2565-00 as attested to in evaluation report FL7241-G26 prepared, signed and sealed by Lyndon F. Schmidt, P.E.

C Calculations

1. Product Anchoring is the more conservative between manufacturer's published recommendations as substantiated by tested specimens reported in test report numbers CTLA 924W and CTLA 924W-1 or anchor analysis for loading conditions, prepared, signed and sealed by Lyndon F. Schmidt, P.E.

2. Buck anchor analysis for loading conditions, prepared, signed and sealed by Lyndon F. Schmidt, P.E.

D Other

1. Certificate of Participation issued by National Accreditation & Management Institute, Inc., certifying that Nan Ya Plastics Corporation, Plastpro Inc is manufacturing products within a quality assurance program that complies with ISO/IEC 17020 and Guide 53.

Lyndon F. Schmidt, P.E.
PE # 43409
October 2, 2008

NAN YA PLASTICS CORP.
PLASTPRO INC.

9 PEACH TREE HILL ROAD
LIVINGSTON, NEW JERSEY 07039

DISTINCTION SERIES
OPAQUE FIBERGLASS DOOR
INSWING / OUTSWING
"IMPACT"

GENERAL NOTES

1. This product has been evaluated and is in compliance with the 2007 Florida Building Code (FBC) structural requirements including the "High Velocity Hurricane Zone" (HVHZ).
2. Product anchors shall be as listed and spaced as shown on details. Anchor embedment to base material shall be beyond wall dressing or stucco.
3. When used in the "HVHZ" this product complies with section 1626 of the Florida Building Code and does not require an impact resistant covering.
4. When used in areas outside of the "HVHZ" requiring wind borne debris protection this product complies with Section 1609.1.2 of the 2007 FBC and does not require an impact resistant covering. This product meets missile level "D" and includes Wind Zone 4 as defined in ASTM E1996.
5. For 2x stud framing construction, anchoring of these units shall be the same as that shown for 2x buck masonry construction.
6. Site conditions that deviate from the details of this drawing require further engineering analysis by a licensed engineer or registered architect.
7. Outswing configurations meet water infiltration requirements for "HVHZ".
8. Inswing configurations do not meet the water infiltration requirements for the "HVHZ". Inswing units shall be installed only in non-habitable areas or at habitable locations protected by an overhang or canopy such that the angle between the edge of canopy or overhang to sill is less than 45 degrees.

TABLE OF CONTENTS

SHEET #	DESCRIPTION
1	Typical elevation, design pressures, & general notes
2	Door panel details
3	Horizontal cross sections
4	Vertical cross sections
5	Buck and frame anchoring - 2X buck masonry construction
6	Frame anchoring - 1X buck masonry construction
7	Bill of materials & components

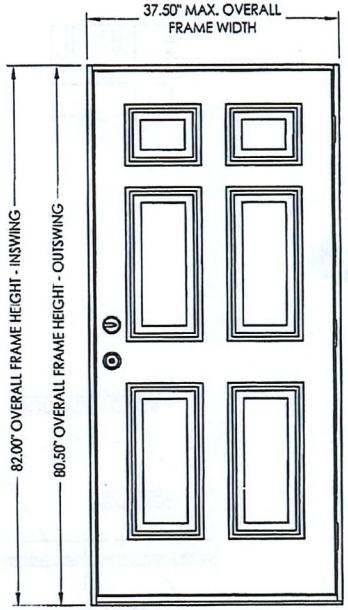

SWING	MAX. FRAME DIMENSION	DESIGN PRESSURE (PSF)	
		POSITIVE	NEGATIVE
INSWING	37.50" x 82.00"	+47.5	-47.5
OUTSWING	37.50" x 80.50"	+50.0	-50.0

Documents Prepared By:
RW BUILDING CONSULTANTS, INC.
P.O. Box 230 Valrico FL. 33595
Phone No.: 813.659.9107
Florida Board of Professional Engineers
Certificate Of Authorization No. 9813
Lyndon F. Schmidt, P.E. No. 43409
10-2-08

PRODUCT: NAN YA PLASTICS CORP. PLASTPRO INC. FIBERGLASS DOOR

PART OR ASSEMBLY: TYPICAL ELEVATION, DESIGN PRESSURES & GENERAL NOTES

NO.	DATE	REVISIONS	BY

DATE: 09/04/08
SCALE: N.T.S.
DWG. BY: RR
CHK. BY: LFS
DRAWING NO.: FL-7241.1
SHEET 1 OF 7

© 2008 R.W. BUILDING CONSULTANTS INC.

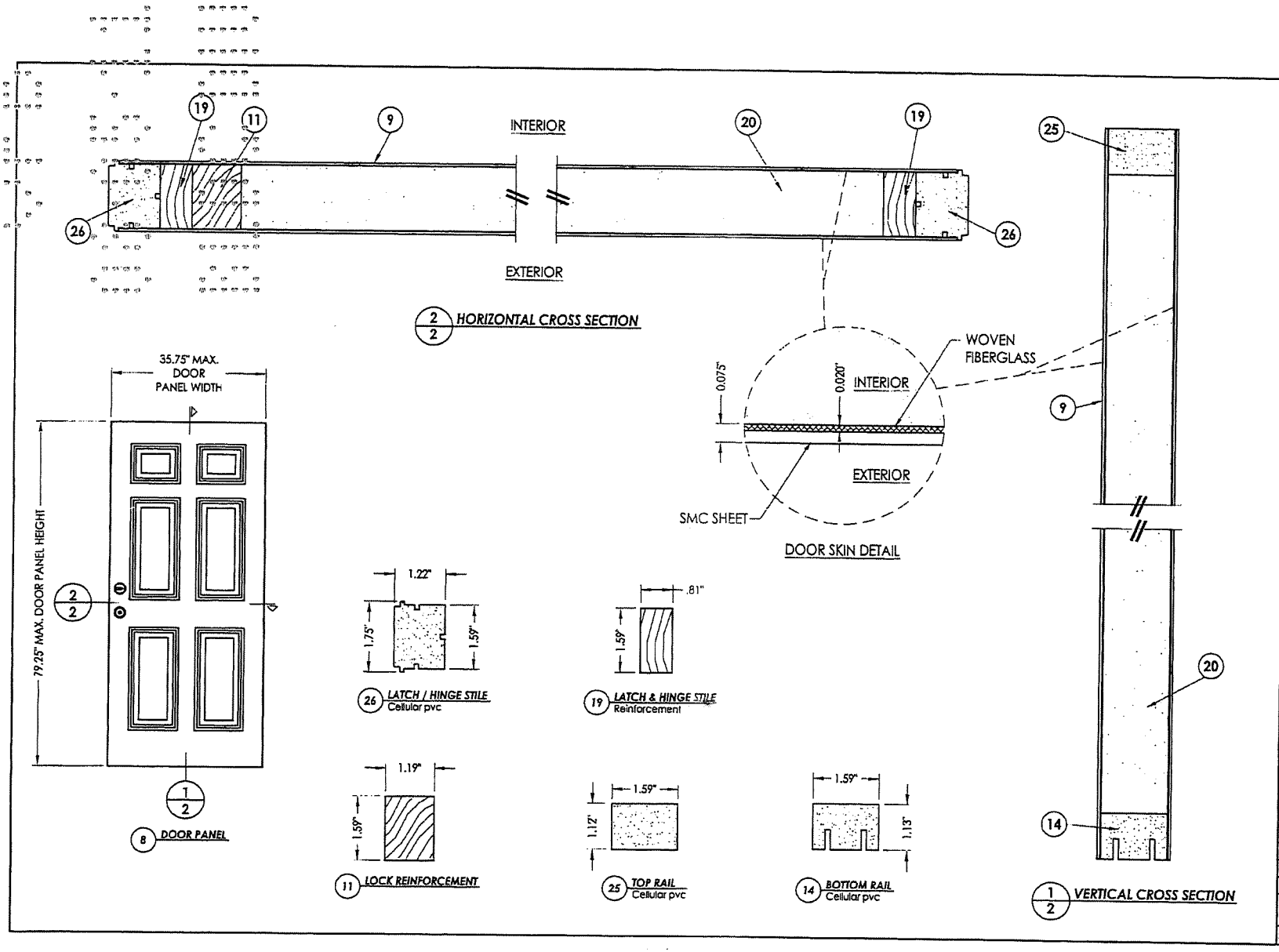

Documents Prepared By:
R.W. BUILDING CONSULTANTS, INC.
P.O. Box 230 Valrico FL 33595
Phone No.: 813.659.9187
Florida Board of Professional Engineers
Certificate Of Authorization No. 9813
Lyndon F. Schmidt, P.E. No. 43409

PRODUCT: NAN YA PLASTICS CORP. PLASTPRO INC. FIBERGLASS DOOR
PART OR ASSEMBLY: DOOR PANEL DETAILS

NO.	DATE	REVISIONS	BY

DATE: 09/04/08
SCALE: N.T.S.
DWG. BY: RR
CHK. BY: LFS
DRAWING NO.: FL-7241.1
SHEET 2 OF 7

© 2008 R.W. BUILDING CONSULTANTS INC.

R:\W - Projects\Project Folders\Proj 1001-1100\pf1006\PF1006 R1\FL-7241 R1\FL-7241.1-4.dwg, Model

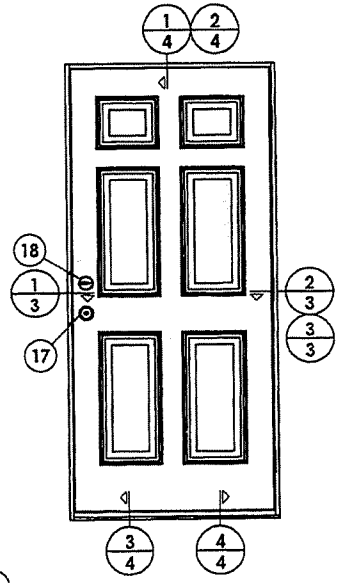

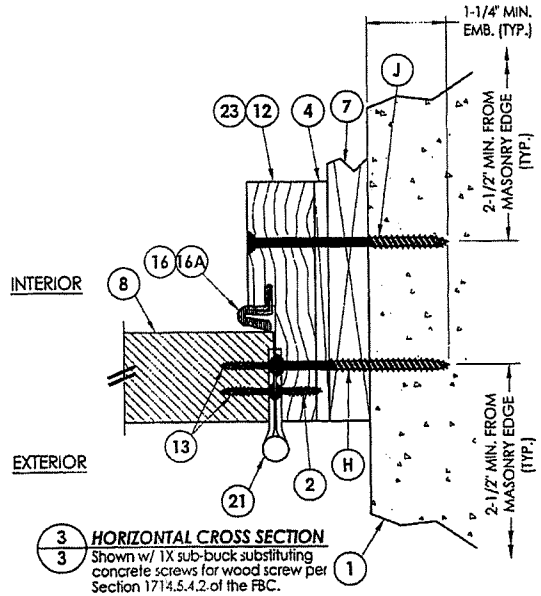

3/3 **HORIZONTAL CROSS SECTION**
Shown w/ 1X sub-buck substituting concrete screws for wood screw per Section 1714.5.4.2 of the FBC.

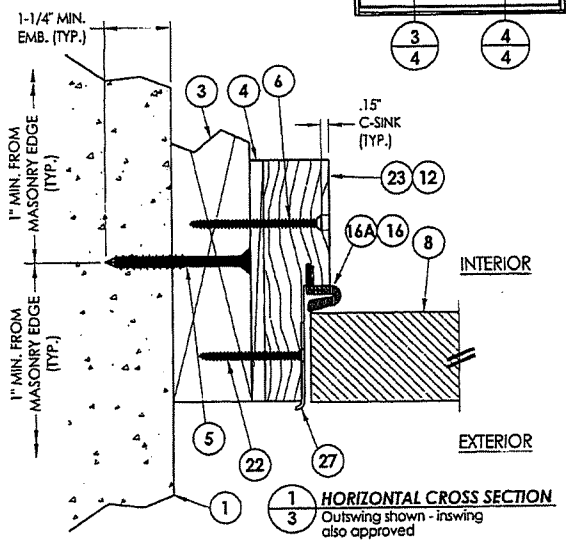

1/3 **HORIZONTAL CROSS SECTION**
Outswing shown - inswing also approved

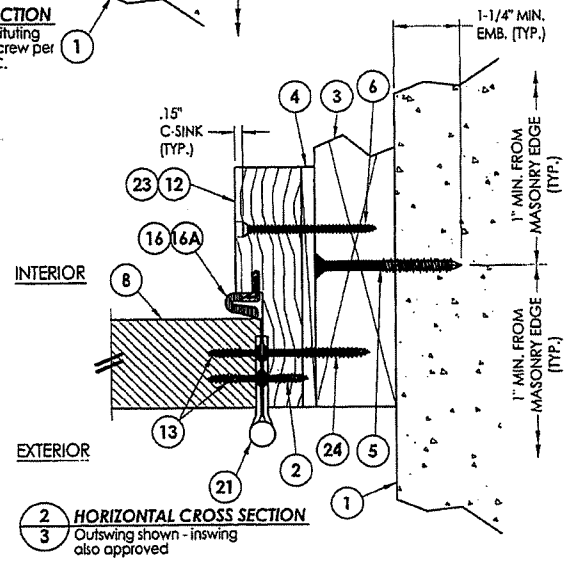

2/3 **HORIZONTAL CROSS SECTION**
Outswing shown - inswing also approved

Documents Prepared By:
RW BUILDING CONSULTANTS, INC.
P.O. Box 230 Venice FL. 33595
Phone No.: 813.659.9197
Florida Board of Professional Engineers
Certificate Of Authorization No. 9513
Lyndon F. Schmidt, P.E. No. 43409

PRODUCT: NAN YA PLASTICS CORP. PLASTPRO INC. FIBERGLASS DOOR
PART OR ASSEMBLY: HORIZONTAL CROSS SECTIONS

NO.	DATE	BY

REVISIONS

DATE: 09/04/08
SCALE: N.T.S.
DWG. BY: RR
CHK. BY: LFS
DRAWING NO.: FL-7241.1
SHEET 3 OF 7

© 2008 R.W. BUILDING CONSULTANTS INC.

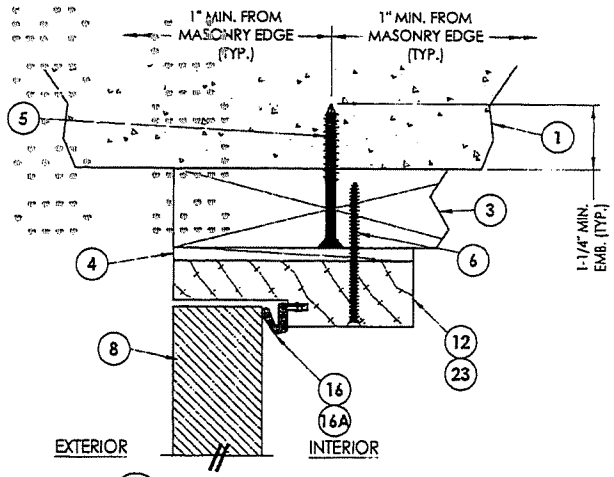

1/4 VERTICAL CROSS SECTION
Outswing shown - inswing also approved

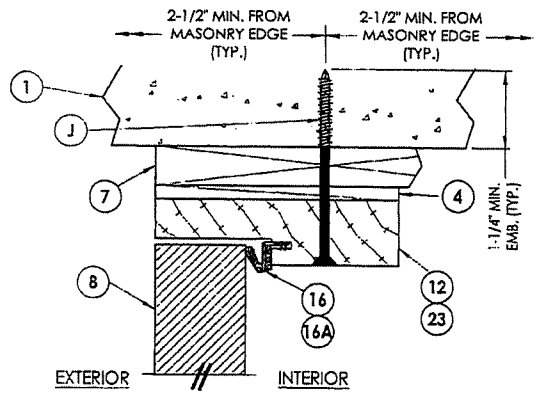

2/4 VERTICAL CROSS SECTION
Shown w/1X sub-buck substituting concrete screws for wood screws per Section 1714.5.4.2 of the FBC

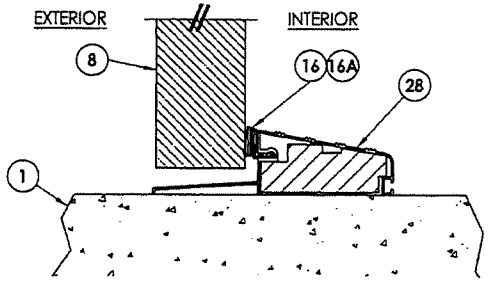

3/4 VERTICAL CROSS SECTION
Outswing configuration
See general notes, sheet 1 for "HVHZ" water infiltration requirements

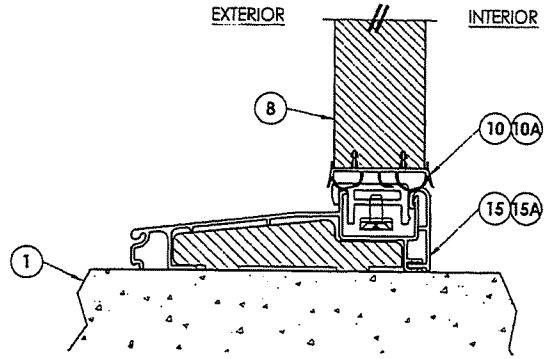

4/4 VERTICAL CROSS SECTION
Inswing configuration
See general notes, sheet 1 for "HVHZ" water infiltration requirements

Documents Prepared By:
RW BUILDING CONSULTANTS, INC.
P.O. Box 230 Valrico FL 33595
Phone No.: 813.659.9197
Florida Board of Professional Engineers
Certificate Of Authorization No. 8513
Lyndon F. Schmidt, P.E. No. 43409

PRODUCT: NAN YA PLASTICS CORP. PLASTPRO INC. FIBERGLASS DOOR
PART OR ASSEMBLY: VERTICAL CROSS SECTIONS

NO.	DATE	REVISIONS	BY

DATE: 09/04/08
SCALE: N.T.S.
DWG. BY: RR
CHK. BY: LFS
DRAWING NO.: FL-7241.1
SHEET 4 OF 7

© 2008 R.W. BUILDING CONSULTANTS INC.

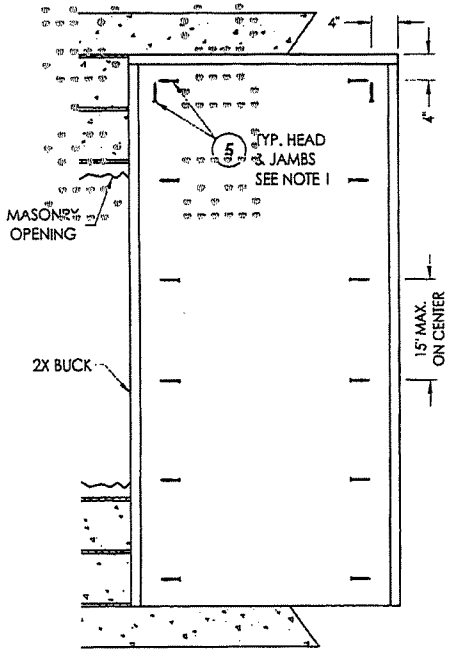

BUCK ANCHORING

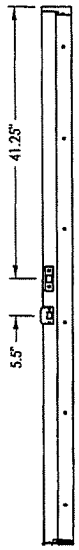

STRIKE JAMB

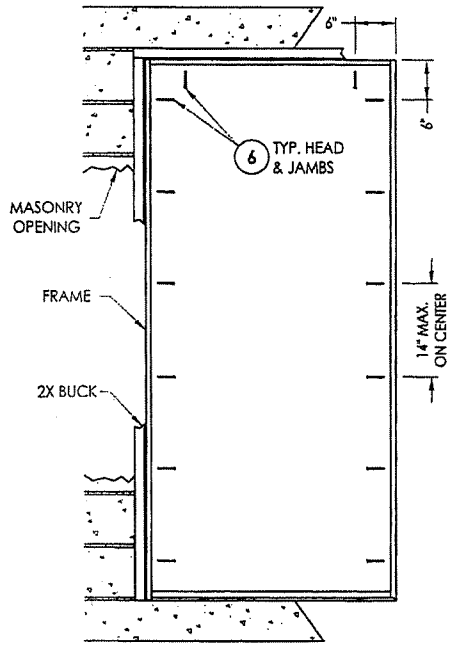

FRAME ANCHORING
Masonry 2X buck construction

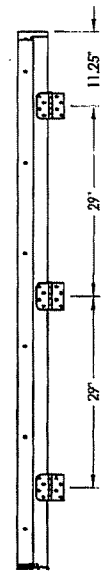

HINGE JAMB

NOTES:

1. 1/4" Eico concrete screws anchoring 2x buck require a minimum 1" clearance to masonry edges, a 1-1/4" minimum embedment and a minimum 4" clearance to adjacent concrete screws. Substitution of equal concrete screws from a different supplier may have different edge distance and center distance requirements. Concrete screw locations at the corners may be adjusted to maintain the minimum edge distance to mortar joints. If concrete screw locations noted as "MAX. ON CENTER" must be adjusted to maintain the minimum edge distance to mortar joints, additional concrete screws may be required to ensure the maximum on center dimension is not exceeded.

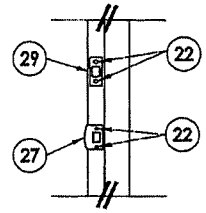

LATCH & DEADBOLT DETAIL

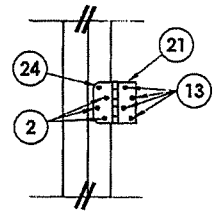

HINGE DETAIL

Documents Prepared By:
RW BUILDING CONSULTANTS, INC.
P.O. Box 230 Valrico FL. 33595
Phone No.: 813.659.9197
Florida Board of Professional Engineers
Certificate Of Authorization No. 9813
Lyndon F. Schmidt, P.E. No. 43409

PRODUCT: NAN YA PLASTICS CORP. PLASTPRO INC. FIBERGLASS DOOR

PART OR ASSEMBLY: BUCK AND FRAME ANCHORING 2X BUCK MASONRY CONSTRUCTION

NO.	DATE	BY	REVISIONS

DATE: 09/04/08
SCALE: N.T.S.
DWG. BY: RR
CHK. BY: LFS
DRAWING NO.: FL--7241.1
SHEET 5 OF 7

© 2008 R.W. BUILDING CONSULTANTS INC.

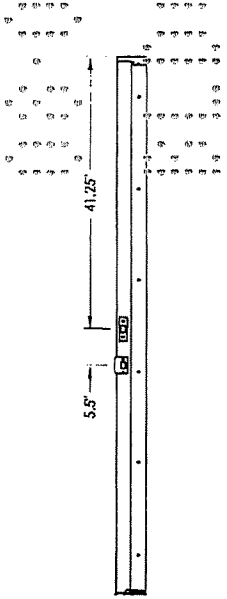

STRIKE JAMB

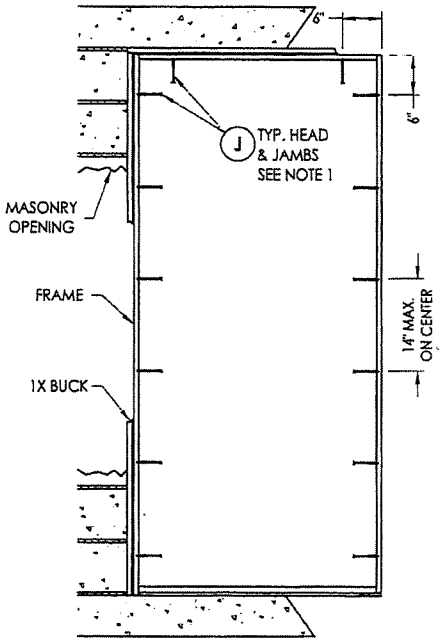

FRAME ANCHORING
Masonry 1X buck construction

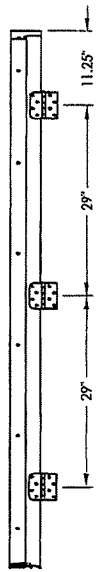

HINGE JAMB

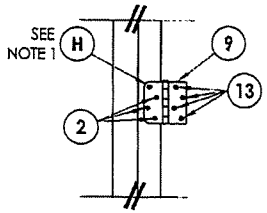

HINGE DETAIL

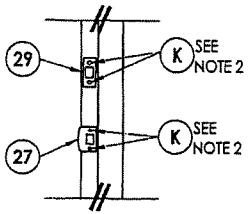

LATCH & DEADBOLT DETAIL

NOTES:

1. *1/4" ITW concrete screws anchoring frame and/or sill require a minimum 2-1/2" clearance to masonry edges, a 1-1/4" minimum embedment and a minimum 3" clearance to adjacent concrete screws. Substitution of equal concrete screws from a different supplier may have different edge distance and center distance requirements. Concrete screw locations at the corners may be adjusted to maintain the minimum edge distance to mortar joints. If concrete screw locations noted as "MAX. ON CENTER" must be adjusted to maintain the minimum edge distance to mortar joints, additional concrete screws may be required to ensure the maximum on center dimension is not exceeded.*

2. *3/16" ITW concrete screws anchoring frame and/or sill require a minimum 2-5/8" clearance to masonry edges, a 1-1/4" minimum embedment and a minimum 2-1/4" clearance to adjacent concrete screws unless otherwise noted by concrete screw manufacturer.*

Documents Prepared By:
BUILDING CONSULTANTS, INC.
P.O. Box 230 Valrico FL 33595
Phone No.: 813.659.9197
Florida Board of Professional Engineers
Certificate Of Authorization No. 9813
Lynden F. Schmidt, P.E. No. 43499

PRODUCT: NAN YA PLASTICS CORP. PLASTPRO INC. FIBERGLASS DOOR

PART OR ASSEMBLY: FRAME ANCHORING 1X BUCK MASONRY CONSTRUCTION

NO.	DATE	REVISIONS	BY

DATE: 09/04/08
SCALE: N.T.S.
DWG. BY: RR
CHK. BY: LFS
DRAWING NO.: FL-7241.1
SHEET 6 OF 7

© 2008 R.W. BUILDING CONSULTANTS INC.

BILL OF MATERIALS

ITEM	DESCRIPTION	MATERIAL
H	1/4" X 3-1/4" PFH ITW CONCRETE SCREW	STEEL
J	1/4" X 3-3/4" PFH ITW CONCRETE SCREW	STEEL
K	3/16" X 3-1/4" PFH ITW CONCRETE SCREW	STEEL
1	MASONRY - 3,192 PSI MIN. CONCRETE CONFORMING TO ACI 301 OR HOLLOW BLOCK CONFORMING TO ASTM C90	CONCRETE
2	#9 X 6/8" PFH WOOD SCREW	STEEL
3	2X BUCK SG >= 0.55	WOOD
4	1/4" MAX. SHIM SPACE	-
5	1/4" X 2-3/4" PFH ELCO CONCRETE SCREW	STEEL
6	#8 X 2-1/2" PFH WOOD SCREW	STEEL
7	1X BUCK SG >= 0.55	WOOD
8	DOOR PANEL	-
9	DOOR SKIN (MIN. 0.075" THICK) BY NAN YA	FIBERGLASS
10	INSWING VINYL DOOR BOTTOM SWEEP BY ENDURA	VINYL
10A	VINYL DOOR BOTTOM SWEEP #3628 BY HOLM IND.	VINYL
11	REINFORCEMENT WOOD FOR LOCKS	WOOD
12	FINGER JOINTED PINE FRAME, HEAD & HINGE JAMBS	WOOD
13	#9 X 1" PFH WOOD SCREW	STEEL
14	BOTTOM RAIL	CELLULAR PVC
15	INSWING ADJUSTABLE THRESHOLD BY ENDURA	ALUM. / WOOD
15A	INSWING ADJUSTABLE THRESHOLD BY DLP	ALUM. / WOOD
16	FORCE 5 WEATHER STRIPPING BY ENDURA	FOAM
16A	COMPRESSION WEATHER STRIP QLON 650 BY SCHLEGEL	FOAM
17	KWIKSET KEYED ENTRY GRADE 2	STEEL
18	KWIKSET DEADBOLT GRADE 2	STEEL
19	CONTINUOUS LATCH AND HINGE STILE REINFORCEMENT	WOOD
20	POLYURETHANE FOAM BY NAN YA	POLYURETHANE
21	4" X 4" BUTT HINGE	STEEL
22	#8 X 2" PFH WOOD SCREW	STEEL
23	POLY FIBER JAMB	COMP./ VINYL
24	#10 X 2" PFH WOOD SCREW	STEEL
25	TOP RAIL	CELLULAR PVC
26	HINGE & LATCH STILE	CELLULAR PVC
27	STRIKE PLATE	STEEL
28	OUTSWING BUMP THRESHOLD	ALUM.
29	DEADBOLT PLATE	STEEL

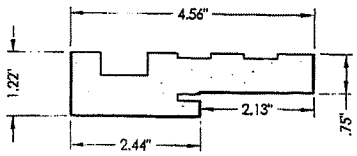

23 POLY FIBER JAMB

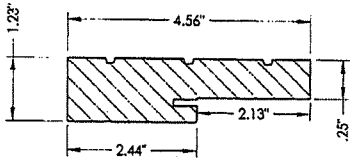

12 4-9/16" JAMB
Finger joint pine

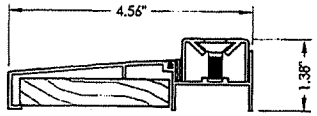

15A ADJUSTABLE INSWING THRESHOLD

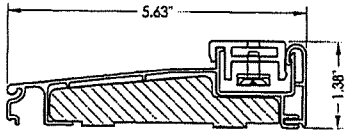

15 ADJUSTABLE INSWING THRESHOLD

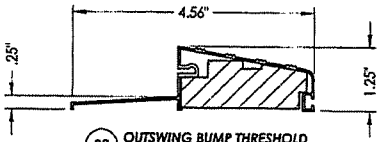

28 OUTSWING BUMP THRESHOLD

Documents Prepared By:
R.W. BUILDING CONSULTANTS, INC.
P.O. Box 230 Valrico FL. 33595
Phone No.: 813.659.9197
Florida Board of Professional Engineers
Certificate Of Authorization No. 9813
Lyndon F. Schmidt, P.E. No. 43409

PRODUCT: NAN YA PLASTICS CORP. PLASTPRO INC. FIBERGLASS DOOR

PART OR ASSEMBLY: BILL OF MATERIALS & COMPONENTS

NO.	DATE	REVISIONS	BY

DATE: 09/04/08
SCALE: N.T.S.
DWG. BY: RR
CHK. BY: LFS
DRAWING NO.: FL-7241.1
SHEET 7 OF 7

© 2008 R.W. BUILDING CONSULTANTS INC.

R W B C

R W Building Consultants, Inc.

Consulting and Engineering Services for the Building Industry

P.O. Box 230 Valrico, FL 33595 Phone 813.659.9197 Facsimile 813.754.9989

Florida Board of Professional Engineers Certificate of Authorization No. 9813

Product Evaluation Report

Report No.:	FL 7241.2 R1
Date:	October 2, 2008
Product Category:	Exterior Doors
Product sub-category:	Swinging Exterior Door Assemblies
Product Name:	Distinction Series Opaque Fiberglass Doors Inswing / Outswing "Impact"
Manufacturer:	Nan Ya Plastics Corporation Plastpro Inc. 9 Peach Tree Hill Road Livingston, NJ 07039 Phone: 800-779-0561 Facsimile: 973-758-4001

Scope: This is a Product Evaluation report issued by R W Building Consultants, Inc. and Lyndon F. Schmidt, P.E. (System ID # 1998) for Nan Ya Plastics Corporation, Plastpro Inc. based on Rule Chapter No. 9B-72.070, Method 1d of the State of Florida Product Approval, Department of Community Affairs-Florida Building Commission.

RW Building Consultants and Lyndon F. Schmidt, P.E. do not have nor will acquire financial interest in the company manufacturing or distributing the product or in any other entity involved in the approval process of the product named herein.

This product has been evaluated for use in locations adhering to the Florida Building Code (2007 Edition).

See Drawing No. FL-7241.2 prepared by R W Building Consultants, Inc. and signed and sealed by Lyndon F. Schmidt, P.E. (FL # 43409) for specific use parameters.

Lyndon F. Schmidt, P.E.
PE # 43409
October 2, 2008

Limitations

1. This product has been evaluated and is in compliance with the 2007 Florida Building Code (FBC) structural requirements including the "High Velocity Hurricane Zone" (HVHZ).
2. Product anchors shall be as listed and spaced as shown on details. Anchor embedment to base material shall be beyond wall dressing or stucco.
3. When used in the "HVHZ" this product complies with section 1626 of the Florida Building Code and does not require an impact resistant covering.
4. When used in areas outside of the "HVHZ" requiring wind borne debris protection this product complies with Section 1609.1.2 of the 2007 FBC and does not require an impact resistant covering. This product meets missile level "D" and includes Wind Zone 4 as defined in ASTM E1996.
5. For 2x stud framing construction, anchoring of these units shall be the same as that shown for 2x buck masonry construction.
6. Site conditions that deviate from the details of this drawing require further engineering analysis by a licensed engineer or registered architect.
7. Outswing configurations meet water infiltration requirements for "HVHZ".
8. Inswing configurations do not meet the water infiltration requirements for the "HVHZ". Inswing units shall be installed only in non-habitable areas or at habitable locations protected by an overhang or canopy such that the angle between the edge of canopy or overhang to sill is less than 45 degrees.
9. See drawing FL-7241.2 for size and design pressure limitations.

Lyndon F. Schmidt, P.E.
PE # 43409
October 2, 2008

Supporting Documents

A Drawing

1. Drawing No. FL-7241.2 prepared by R W Building Consultants, Inc. (Florida Board of Professional Engineers Certificate of Authorization No. 9813), signed and sealed by Lyndon F. Schmidt, P.E.

B Tests Performed

1. Testing per TAS 201-94, TAS 202-94 and TAS 203-94 as performed by Certified Testing Laboratories, and reported in test report number CTLA 924W, signed and sealed by Ramesh Patel, P.E.

2. Testing per TAS 201-94, TAS 202-94 and TAS 203-94 as performed by Certified Testing Laboratories, and reported in test report number CTLA 924W-1, signed and sealed by Ramesh Patel, P.E.

3. Testing per ASTM G26-95, ASTM D2843-99, ASTM D635-98, ASTM D1929-96(2001) and ASTM D638-03 as performed by ETC Laboratories and reported in test report number ETC-05-255-16776.1, signed and sealed by Joseph L. Doldan, P.E. ASTM G155-04 is referenced in the Florida Building Code; ASTM G26-95 Method A is equivalent to ASTM G155-04 Cycle 1 and meets the intent and purpose of the Florida Building Code as attested to in evaluation report FL7241-G26 prepared, signed and sealed by Lyndon F. Schmidt, P.E. Additionally, the Florida Building Code references ASTM D2565-00; the test conditions as reported in ETC-05-255-16776.1 and the calculation of the property retention index (PRI) meet the requirements of ASTM D2565-00 as attested to in evaluation report FL7241-G26 prepared, signed and sealed by Lyndon F. Schmidt, P.E.

C Calculations

1. Product Anchoring is the more conservative between manufacturer's published recommendations as substantiated by tested specimens reported in test report numbers CTLA 924W and CTLA 924W-1 or anchor analysis for loading conditions, prepared, signed and sealed by Lyndon F. Schmidt, P.E.

2. Buck anchor analysis for loading conditions, prepared, signed and sealed by Lyndon F. Schmidt, P.E.

D Other

1. Certificate of Participation issued by National Accreditation & Management Institute, Inc., certifying that Nan Ya Plastics Corporation, Plastpro Inc is manufacturing products within a quality assurance program that complies with ISO/IEC 17020 and Guide 53.

Lyndon F. Schmidt, P.E.
PE # 43409
October 2, 2008

NAN YA PLASTICS CORP.
PLASTPRO INC.

9 PEACH TREE HILL ROAD
LIVINGSTON, NEW JERSEY 07039

DISTINCTION SERIES
OPAQUE FIBERGLASS DOORS
INSWING / OUTSWING
"IMPACT"

GENERAL NOTES:

1. This product has been evaluated and is in compliance with the 2007 Florida Building Code (FBC) structural requirements including the "High Velocity Hurricane Zone" (HVHZ).
2. Product anchors shall be as listed and spaced as shown on details. Anchor embedment to base material shall be beyond wall dressing or stucco.
3. When used in the "HVHZ" this product complies with section 1626 of the Florida Building Code and does not require an impact resistant covering.
4. When used in areas outside of the "HVHZ" requiring wind borne debris protection this product complies with Section 1609.1.2 of the 2007 FBC and does not require an impact resistant covering. This product meets missile level "D" and includes Wind Zone 4 as defined in ASTM E1996.
5. For 2x stud framing construction, anchoring of these units shall be the same as that shown for 2x buck masonry construction.
6. Site conditions that deviate from the details of this drawing require further engineering analysis by a licensed engineer or registered architect.
7. Outswing configurations meet water infiltration requirements for "HVHZ".
8. Inswing configurations do not meet the water infiltration requirements for the "HVHZ". Inswing units shall be installed only in non-habitable areas or at habitable locations protected by an overhang or canopy such that the angle between the edge of canopy or overhang to sill is less than 45 degrees.

TABLE OF CONTENTS

SHEET #	DESCRIPTION
1	Typical elevation, design pressures, & general notes
2	Door panel details
3	Horizontal cross sections
4	Vertical cross sections
5	Buck and frame anchoring - 2X buck masonry construction
6	Frame anchoring - 1X buck masonry construction
7	Endura astragal details
8	Bill of materials & components

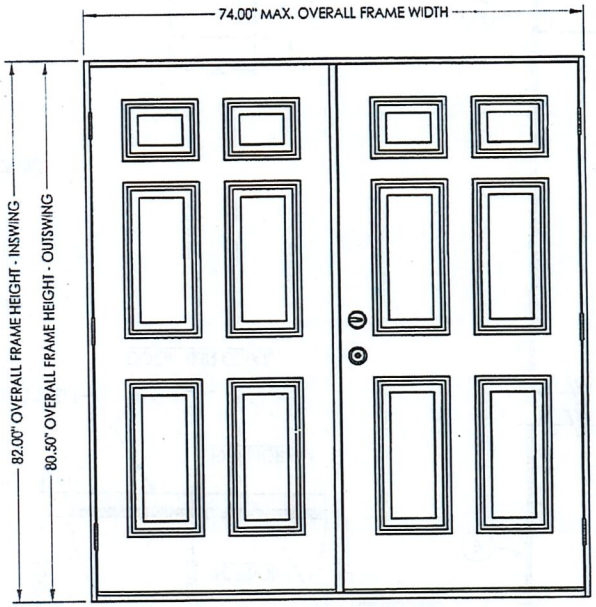

SWING	MAX. FRAME DIMENSION	DESIGN PRESSURE (PSF)	
		POSITIVE	NEGATIVE
INSWING	74.00" x 82.00"	+47.5	-47.5
OUTSWING	74.00" x 80.50"	+50.0	-50.0

Documents Prepared By:
BUILDING CONSULTANTS, INC.
P.O. Box 230 Valrico FL. 33595
Phone No.: 813.659.9197
Florida Board of Professional Engineers
Certificate Of Authorization No. 9813
Lyndon F. Schmidt, P.E. No. 43409

PRODUCT: NAN YA PLASTICS CORP. PLASTPRO INC. FIBERGLASS DOOR

PART OR ASSEMBLY: TYPICAL ELEVATION, DESIGN PRESSURES & GENERAL NOTES

NO.	DATE	BY	REVISIONS

DATE: 09/04/08
SCALE: N.T.S.
DWG. BY: RR
CHK. BY: LFS
DRAWING NO.: FL-7241.2
SHEET 1 OF 8

© 2008 R.W. BUILDING CONSULTANTS INC.

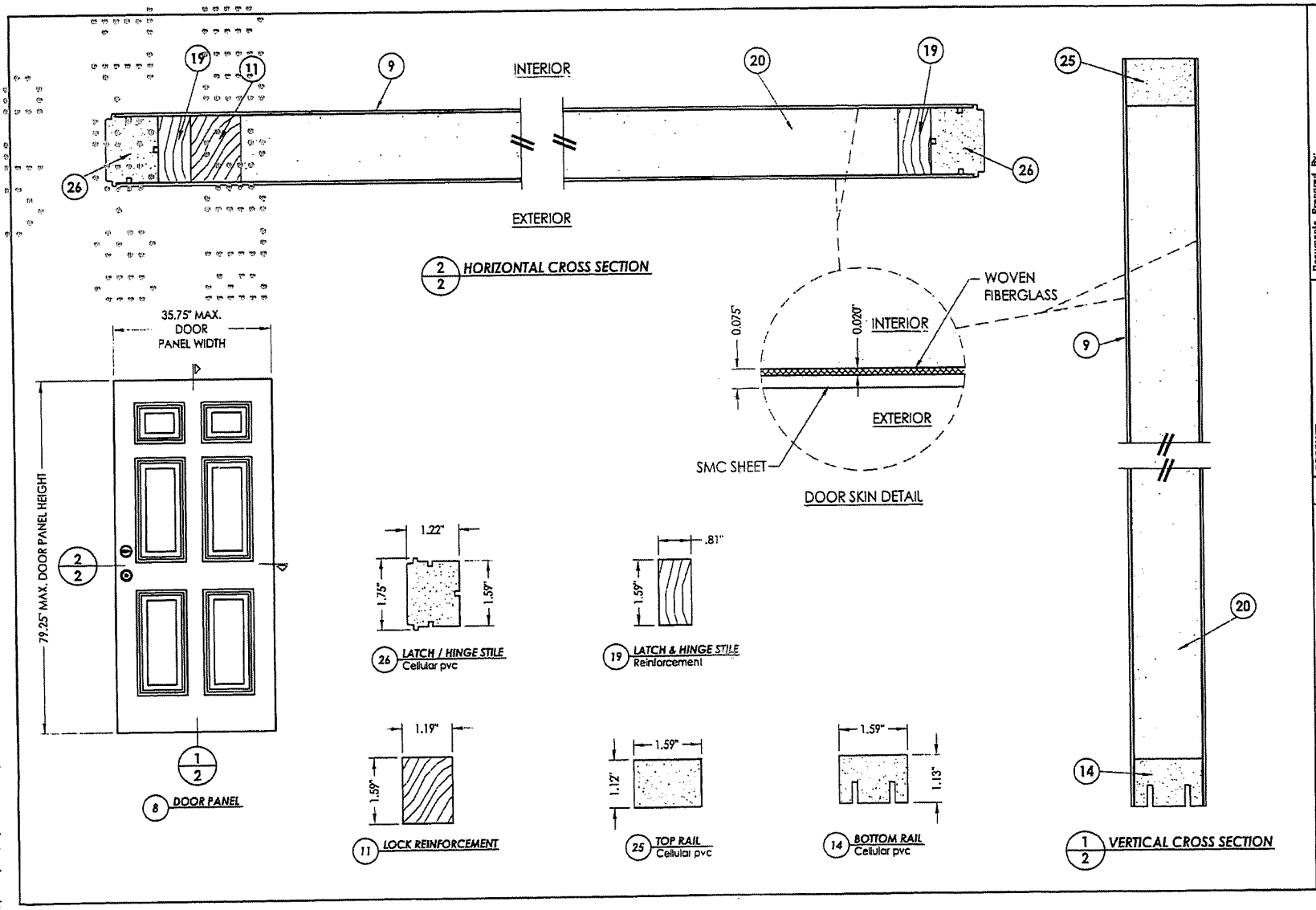

Documents Prepared By:
RW BUILDING CONSULTANTS, INC.
P.O. Box 230 Valrico FL 33595
Phone No.: 813.659.9197
Florida Board of Professional Engineers
Certificate Of Authorization No. 9813
Lyndon F. Schmidt, P.E. No. 43409

PRODUCT: NAN YA PLASTICS CORP. PLASTPRO INC. FIBERGLASS DOOR

PART OR ASSEMBLY: DOOR PANEL DETAILS

NO.	DATE	REVISIONS	BY

DATE: 09/04/08
SCALE: N.T.S.
DWG. BY: RR
CHK. BY: LFS
DRAWING NO.: FL-7241.2
SHEET 2 OF 8

© 2008 R.W. BUILDING CONSULTANTS INC.

K:\A - Projects\Project Folders\Proj 1001-1100\pr1006\PF1006 R1\FL-7241 R1\FL-7241.1-4.dwg, Model

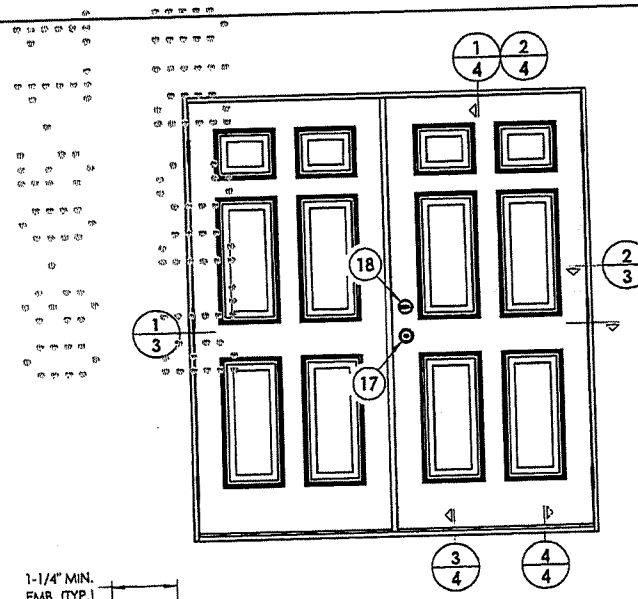

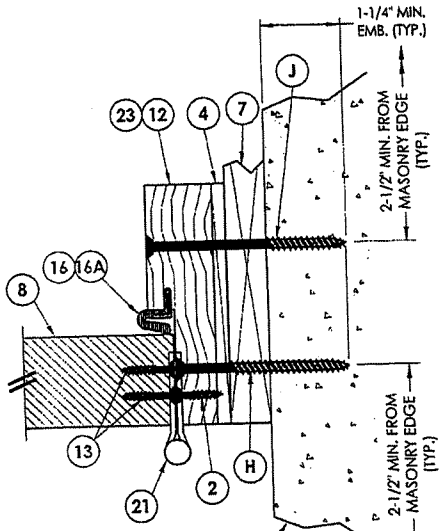

2/3 **HORIZONTAL CROSS SECTION**
Shown w/ 1X sub-buck substituting concrete screws for wood screw per Section 1714.5.4.2 of the FBC.

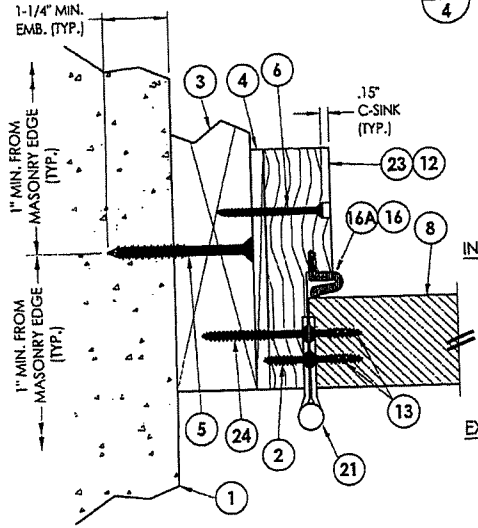

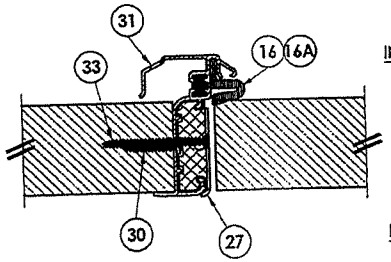

1/3 **HORIZONTAL CROSS SECTION**
Outswing shown - inswing also approved

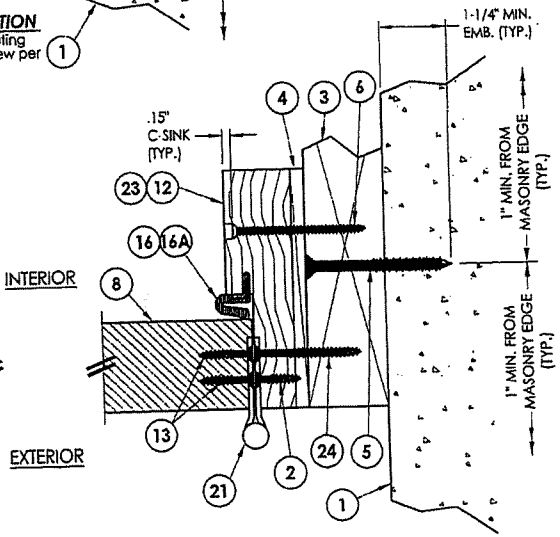

Documents Prepared By:
BUILDING CONSULTANTS, INC.
P.O. Box 230 Valrico FL 33595
Phone No.: 813.659.9197
Florida Board of Professional Engineers
Certificate Of Authorization No. 9813
Lyndon F. Schmidt, P.E. No. 43409

PRODUCT: NAN YA PLASTICS CORP. PLASTPRO INC. FIBERGLASS DOOR
PART OR ASSEMBLY: HORIZONTAL CROSS SECTIONS

NO.	DATE	REVISIONS	BY

DATE: 09/04/08
SCALE: N.T.S.
DWG. BY: RR
CHK. BY: LFS
DRAWING NO.: FL-7241.2
SHEET 3 OF 8

© 2008 R.W. BUILDING CONSULTANTS INC.

K:\A - Projects\Project Folders\Proj 1001-1100\p1100\p1100 R1\FL-7241 R1\FL-7241.1-4.dwg, Model

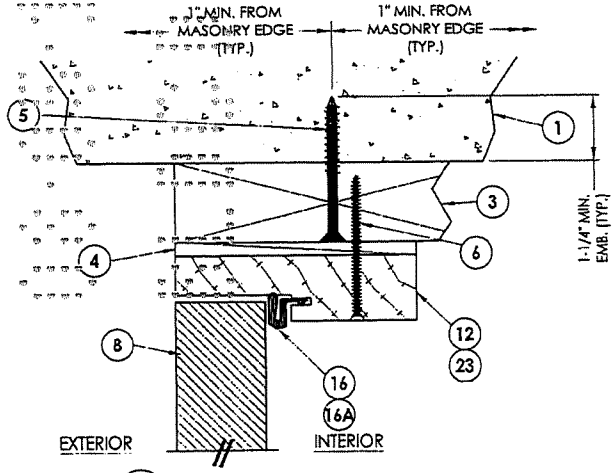

1/4 VERTICAL CROSS SECTION
Outswing shown - inswing also approved

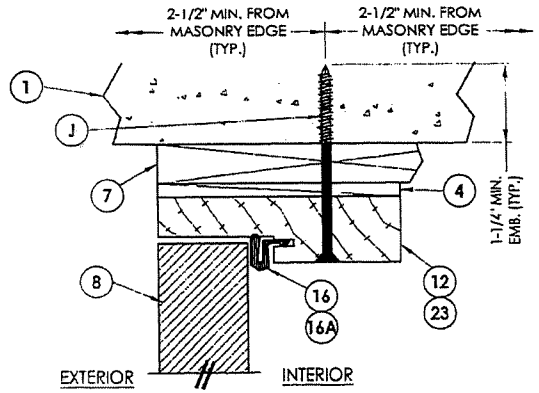

2/4 VERTICAL CROSS SECTION
Shown w/1X sub-buck substituting concrete screws for wood screws per Section 1714.5.4.2 of the FBC

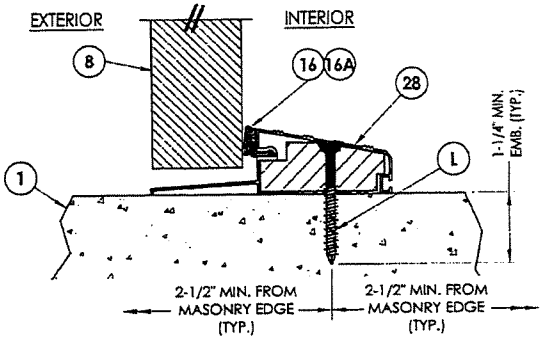

3/4 VERTICAL CROSS SECTION
Outswing configuration
See general notes, sheet 1 for "HVHZ" water infiltration requirements

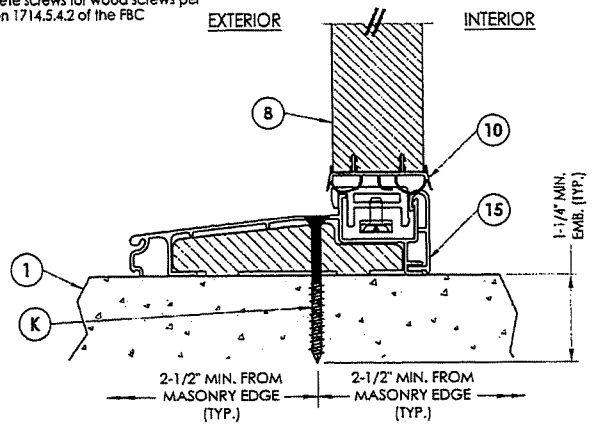

4/4 VERTICAL CROSS SECTION
Inswing configuration
See general notes, sheet 1 for "HVHZ" water infiltration requirements

Documents Prepared By:
RW BUILDING CONSULTANTS, INC.
P.O. Box 230 Valrico FL. 33595
Phone No.: 813.659.9197
Florida Board of Professional Engineers Certificate of Authorization No. 9813
Lyndon F. Schmidt, P.E. No. 43409

PRODUCT: NAN YA PLASTICS CORP. PLASTPRO INC. FIBERGLASS DOOR
PART OR ASSEMBLY: VERTICAL CROSS SECTIONS

NO.	DATE	BY

REVISIONS

DATE: 09/04/08
SCALE: N.T.S.
DWG. BY: RR
CHK. BY: LFS
DRAWING NO.: FL-7241.2
SHEET 4 OF 8

© 2008 R.W. BUILDING CONSULTANTS INC.

R:\W - PROJECTS\PROJECT FOLDERS\PROJ 1001-1100\1010\1010-FL-1006 NAN YA\FL-7241 NAN YA\FL-7241.2-4.DWG, MODEL

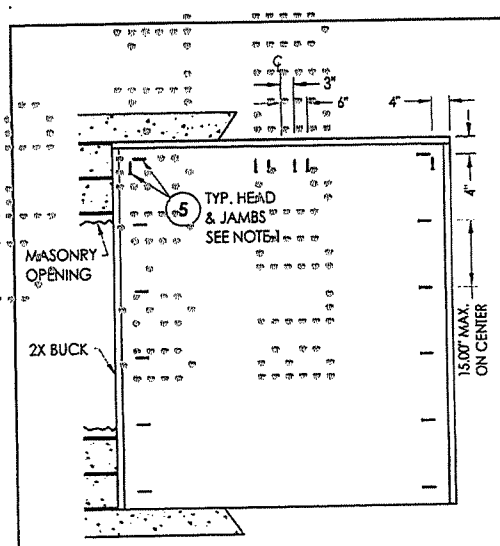

BUCK ANCHORING

ASTRAGAL STRIKE JAMB

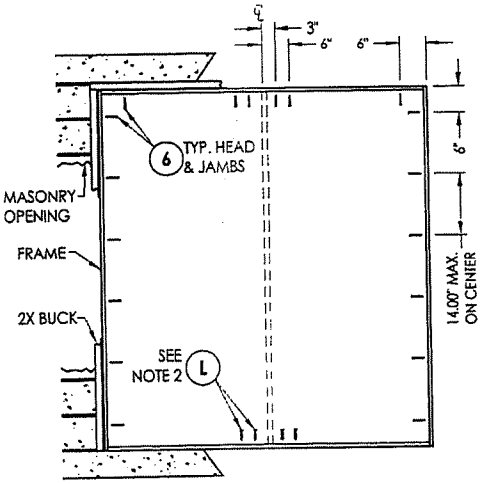

FRAME ANCHORING
Masonry 2X buck construction

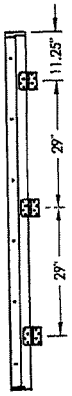

HINGE JAMB

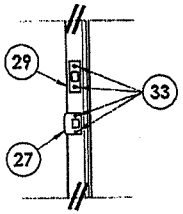

LATCH & DEAD BOLT DETAIL

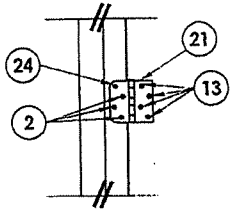

HINGE DETAIL

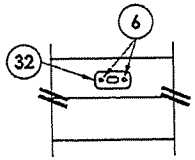

DETAIL 2
Attach astragal throw bolt strike plate to frame as shown

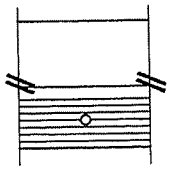

DETAIL 1
Astragal throw bolts at the threshold (Outswing)

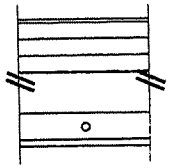

DETAIL 1
Astragal throw bolts at the threshold (Inswing)

NOTES:

1. 1/4" Elco concrete screws anchoring 2x buck require a minimum 1" clearance to masonry edges, a 1-1/4" minimum embedment and a minimum 4" clearance to adjacent concrete screws. Substitution of equal concrete screws from a different supplier may have different edge distance and center distance requirements. Concrete screw locations at the corners and at astragal locations may be adjusted to maintain the minimum edge distance to mortar joints. If concrete screw locations noted as "MAX. ON CENTER" must be adjusted to maintain the minimum edge distance to mortar joints, additional concrete screws may be required to ensure the maximum on center dimension is not exceeded.

2. 1/4" ITW concrete screws anchoring frame and/or sill require a minimum 2-1/2" clearance to masonry edges, a 1-1/4" minimum embedment and a minimum 3" clearance to adjacent concrete screws. Substitution of equal concrete screws from a different supplier may have different edge distance and center distance requirements. Concrete screw locations at the corners and at astragal locations may be adjusted to maintain the minimum edge distance to mortar joints. If concrete screw locations noted as "MAX. ON CENTER" must be adjusted to maintain the minimum edge distance to mortar joints, additional concrete screws may be required to ensure the maximum on center dimension is not exceeded.

Documents Prepared By:
RW BUILDING CONSULTANTS, INC.
P.O. Box 230 Valrico FL. 33595
Phone No.: 813.659.9197
Florida Board of Professional Engineers
Certificate of Authorization No. 9813
Lyndon F. Schmidt, P.E. No. 43409

PRODUCT: NAN YA PLASTICS CORP. PLASTPRO INC. FIBERGLASS DOOR

PART OR ASSEMBLY: BUCK AND FRAME ANCHORING 2X BUCK MASONRY CONSTRUCTION

NO.	DATE	BY	REVISIONS

DATE: 09/04/08
SCALE: N.T.S.
DWG. BY: RR
CHK. BY: LFS
DRAWING NO.: FL-7241.2
SHEET 5 OF 8

© 2008 R.W. BUILDING CONSULTANTS INC.

K:\A - Projects\Project Folders\01 - 1000\1000-1 - 1000\FL7241 FL7241-1-7241 FL7241-1-7241.dwg, model

ASTRAGAL STRIKE JAMB

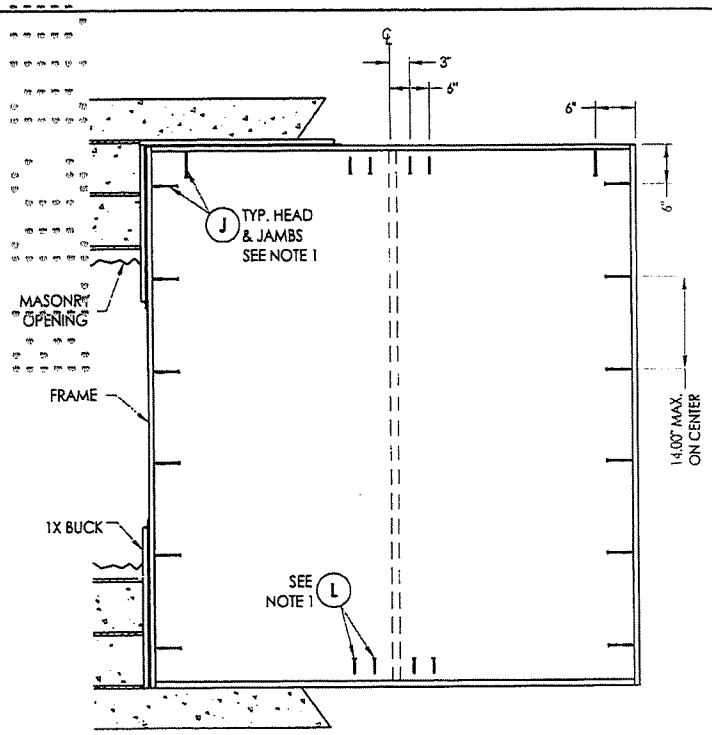

FRAME ANCHORING
Masonry 1X buck construction

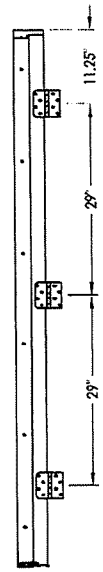

HINGE JAMB

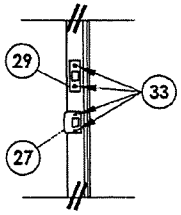

LATCH & DEAD BOLT DETAIL

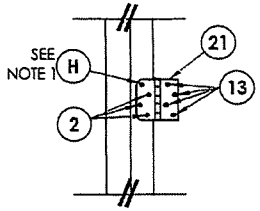

HINGE DETAIL

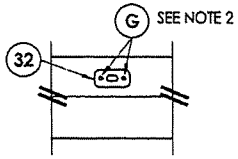

DETAIL 2
Attach astragal throw bolt strike plate to frame as shown

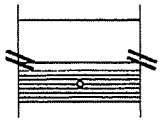

DETAIL 1
Astragal throw bolts at the threshold (Outswing)

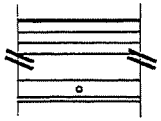

DETAIL 1
Astragal throw bolts at the threshold (Inswing)

NOTES:

1. 1/4" ITW concrete screws anchoring frame and/or sill require a minimum 2-1/2" clearance to masonry edges, a 1-1/4" minimum embedment and a minimum 3" clearance to adjacent concrete screws. Substitution of equal concrete screws from a different supplier may have different edge distance and center distance requirements. Concrete screw locations at the corners and at astragal locations may be adjusted to maintain the minimum edge distance to mortar joints. If concrete screw locations noted as "MAX. ON CENTER" must be adjusted to maintain the minimum edge distance to mortar joints, additional concrete screws may be required to ensure the maximum on center dimension is not exceeded.

2. 3/16" ITW concrete screws anchoring frame and/or sill require a minimum 2-5/8" clearance to masonry edges, a 1-1/4" minimum embedment and a minimum 2-1/4" clearance to adjacent concrete screws unless otherwise noted by concrete screw manufacturer.

Documents Prepared By:
R.W. BUILDING CONSULTANTS, INC.
P.O. Box 230 Valrico FL. 33595
Phone No.: 813.659.9187
Florida Board of Professional Engineers
Certificate of Authorization No. 9813
Lyndon F. Schmidt, P.E. No. 43409

PRODUCT: NAN YA PLASTICS CORP. PLASTPRO INC. FIBERGLASS DOOR

PART OR ASSEMBLY: FRAME ANCHORING 1X BUCK MASONRY CONSTRUCTION

NO.	DATE	BY

REVISIONS

DATE: 09/04/08
SCALE: N.T.S.
DWG. BY: RR
CHK. BY: LFS
DRAWING NO.: FL-7241.2
SHEET 6 OF 8

© 2008 R.W. BUILDING CONSULTANTS INC.

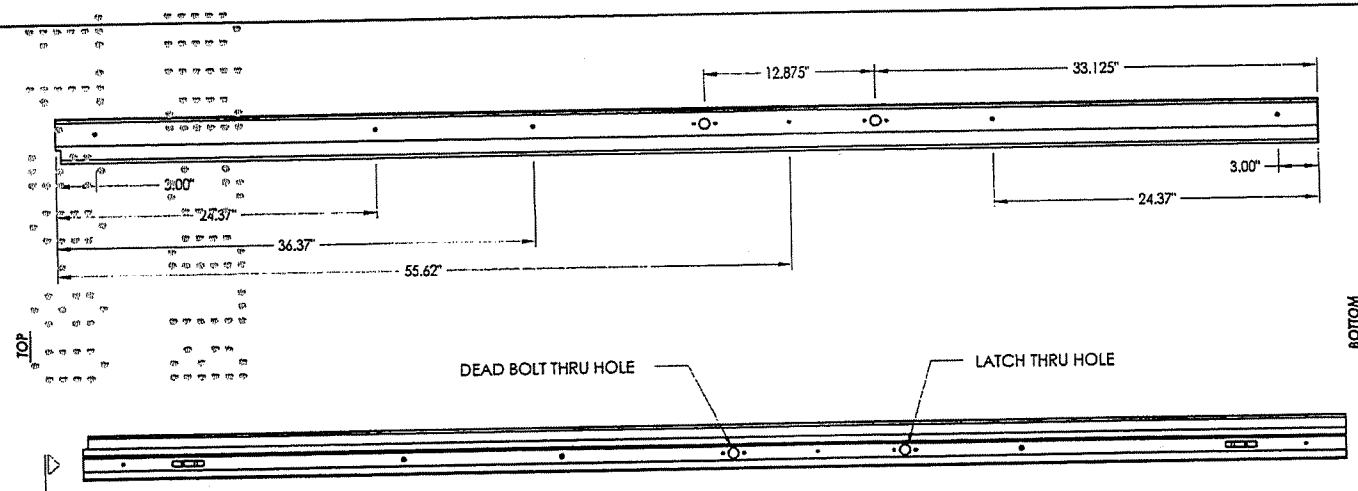

8'0" ALUMINUM ASTRAGAL ASSEMBLY
By Endura Product

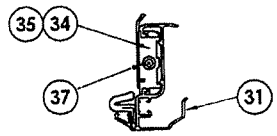

VIEW A-A
Aluminum Astragal Assembly

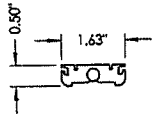

35 TOP BOLT RETAINER
MATL: 9-3/4" Aluminum

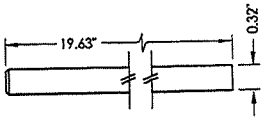

37 SLIDE BOLT ROD
MATL: Steel

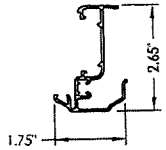

31 ALUMINUM ASTRAGAL
By Endura Product

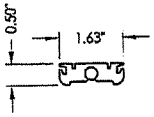

34 TOP BOLT RETAINER
MATL: 4 3/4" HDPE

Documents Prepared By:
R.W. BUILDING CONSULTANTS, INC.
P.O. Box 230 Valrico FL 33595
Phone No.: 813.659.9187
Florida Board of Professional Engineers
Certificate Of Authorization No. 08813
Lyndon F. Schmidt, P.E. No. 43409

PRODUCT: NAN YA PLASTICS CORP. PLASTPRO INC. FIBERGLASS DOOR

PART OR ASSEMBLY: ENDURA ASTRAGAL DETAILS

NO.	DATE	REVISIONS	BY

DATE: 09/04/08
SCALE: N.T.S.
DWG. BY: RR
CHK. BY: LFS
DRAWING NO.: FL-7241.2
SHEET 7 OF 8

© 2008 R.W. BUILDING CONSULTANTS INC.

R:\A - Projects\Project Folders\Proj 1001-1100\pf1006\PF1006 R1\FL-7241 R1\FL-7241.1-A.dwg, Model

BILL OF MATERIALS

ITEM	DESCRIPTION	MATERIAL
G	3/16" X 3-1/4" PFH ITW CONCRETE SCREW	STEEL
H	1/4" X 3-1/4" PFH ITW CONCRETE SCREW	STEEL
J	1/4" X 3-3/4" PFH ITW CONCRETE SCREW	STEEL
K	1/4" X 2-3/4" PFH ITW CONCRETE SCREW	STEEL
L	1/4" X 2-1/4" PFH ITW CONCRETE SCREW	STEEL
1	MASONRY - 3,192 PSI MIN. CONCRETE CONFORMING TO ACI 301 OR HOLLOW BLOCK CONFORMING TO ASTM C90	CONCRETE
2	#9 X 3/4" PFH WOOD SCREW	STEEL
3	2X BUCK SG >= 0.55	WOOD
4	1/4" MAX. SHIM SPACE	-
5	1/4" X 2-3/4" PFH ELCO CONCRETE SCREW	STEEL
6	#8 X 2-1/2" PFH WOOD SCREW	STEEL
7	1X BUCK SG >= 0.55	WOOD
8	DOOR PANEL	-
9	DOOR SKIN (MIN. 0.075" THICK) BY NAN YA	FIBERGLASS
10	INSWING VINYL DOOR BOTTOM SWEEP BY ENDURA	VINYL
11	REINFORCEMENT WOOD FOR LOCKS	WOOD
12	FINGER JOINTED PINE FRAME, HEAD & HINGE JAMBS	WOOD
13	#9 X 1" PFH WOOD SCREW	STEEL
14	BOTTOM RAIL	CELLULAR PVC
15	INSWING ADJUSTABLE THRESHOLD BY ENDURA	ALUM. / WOOD
16	FORCE 5 WEATHER STRIPPING BY ENDURA	FOAM
16A	COMPRESSION WEATHER STRIP QLON 650 BY SCHLEGEL	FOAM
17	KWIKSET KEYED ENTRY GRADE 2	STEEL
18	KWIKSET DEADBOLT GRADE 2	STEEL
19	CONTINUOUS LATCH AND HINGE STILE REINFORCEMENT	WOOD
20	POLYURETHANE FOAM BY NAN YA	POLYURETHANE
21	4" X 4" BUTT HINGE	STEEL
23	POLY FIBER JAMB	COMP./ VINYL
24	#10 X 2" PFH WOOD SCREW	STEEL
25	TOP RAIL	CELLULAR PVC
26	HINGE & LATCH STILE	CELLULAR PVC
27	STRIKE PLATE	STEEL
28	OUTSWING BUMP THRESHOLD	ALUM.
29	DEAD BOLT PLATE	STEEL
30	#8 X 1" PHILLIPS FLAT HEAD WOOD SCREW	STEEL
31	EXTRUDED ALUMINUM "ULTIMATE ASTRAGAL" BY ENDURA	ALUM.
32	ASTRAGAL STRIKE PLATE	STEEL
33	#8 X 2" PFH SCREW	STEEL
34	4-3/4" LENGTH TOP BOLT RETAINER	HDPE
35	9-8/4" LENGTH TOP BOLT RETAINER	ALUMINUM
37	SLIDE BOLT ROD	STEEL

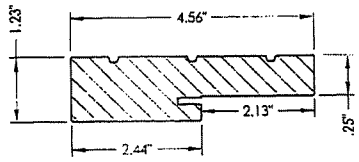

12 4-9/16" JAMB
Finger joint pine

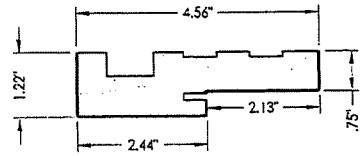

23 POLY FIBER JAMB

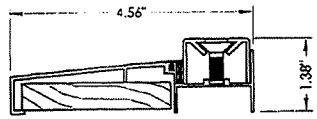

15A ADJUSTABLE INSWING THRESHOLD

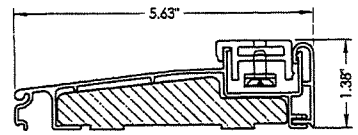

15 ADJUSTABLE INSWING THRESHOLD

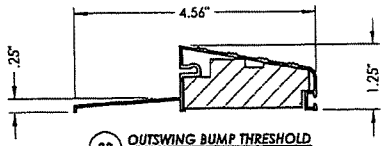

28 OUTSWING BUMP THRESHOLD

Documents Prepared By:
BUILDING CONSULTANTS, INC.
P.O. Box 230 Valrico FL 33595
Phone No.: 813.659.9197
Florida Board of Professional Engineers
Certificate of Authorization No. 9813
Lyndon F. Schmidt, P.E. No. 43409

PRODUCT: NAN YA PLASTICS CORP. PLASTPRO INC. FIBERGLASS DOOR

PART OR ASSEMBLY: BILL OF MATERIALS & COMPONENTS

NO.	DATE	REVISIONS	BY

DATE: 09/04/08
SCALE: N.T.S.
DWG. BY: RR
CHK. BY: LFS
DRAWING NO.: FL-7241.2
SHEET 8 OF 8

© 2008 R.W. BUILDING CONSULTANTS INC.

MIAMI-DADE COUNTY
BUILDING CODE COMPLIANCE OFFICE (BCCO)
PRODUCT CONTROL DIVISION

MIAMI-DADE COUNTY, FLORIDA
METRO-DADE FLAGLER BUILDING
140 WEST FLAGLER STREET, SUITE 1603
MIAMI, FLORIDA 33130-1563
(305) 375-2901 FAX (305) 372-6339
www.miamidade.gov/buildingcode

NOTICE OF ACCEPTANCE (NOA)

Best Rolling Doors, Inc.
9780 NW 79th Avenue
Hialeah Gardens, FL 33016

SCOPE:

This NOA is being issued under the applicable rules and regulations governing the use of construction materials. The documentation submitted has been reviewed by Miami-Dade County Product Control Division and accepted by the Board of Rules and Appeals (BORA) to be used in Miami Dade County and other areas where allowed by the Authority Having Jurisdiction (AHJ).

This NOA shall not be valid after the expiration date stated below. The Miami-Dade County Product Control Division (In Miami Dade County) and/or the AHJ (in areas other than Miami Dade County) reserve the right to have this product or material tested for quality assurance purposes. If this product or material fails to perform in the accepted manner, the manufacturer will incur the expense of such testing and the AHJ may immediately revoke, modify, or suspend the use of such product or material within their jurisdiction. BORA reserves the right to revoke this acceptance, if it is determined by Miami-Dade County Product Control Division that this product or material fails to meet the requirements of the applicable building code.

This product is approved as described herein, and has been designed to comply with the Florida Building Code, including the High Velocity Hurricane Zone.

DESCRIPTION: Model S10-6565 Steel Roll-up Door

APPROVAL DOCUMENT: Drawing No. **6565_2009_02**, titled "Model S10-6565", sheets 1 through 3 of 3, dated 04/06/09, prepared by Best Rolling Door, Inc, signed and sealed by Joseph H. Dixon, Jr., P.E., bearing the Miami-Dade County Product Control approval stamp with the Notice of Acceptance number and approval date by the Miami-Dade County Product Control Division.

MISSILE IMPACT RATING: Large and Small Missile Impact Resistant

LABELING: Each unit shall bear a permanent label with the manufacturer's name or logo, city, state and following statement: "Miami-Dade County Product Control Approved", unless otherwise noted herein.

RENEWAL of this NOA shall be considered after a renewal application has been filed and there has been no change in the applicable building code negatively affecting the performance of this product.

TERMINATION of this NOA will occur after the expiration date or if there has been a revision or change in the materials, use, and/or manufacture of the product or process. Misuse of this NOA as an endorsement of any product, for sales, advertising or any other purposes shall automatically terminate this NOA. Failure to comply with any section of this NOA shall be cause for termination and removal of NOA.

ADVERTISEMENT: The NOA number preceded by the words Miami-Dade County, Florida, and followed by the expiration date may be displayed in advertising literature. If any portion of the NOA is displayed, then it shall be done in its entirety.

INSPECTION: A copy of this entire NOA shall be provided to the user by the manufacturer or its distributors and shall be available for inspection at the job site at the request of the Building Official.

This NOA consists of this page 1 and evidence page E-1, as well as approval document mentioned above.

The submitted documentation was reviewed by **Carlos M. Utrera, P.E.**

MIAMI-DADE COUNTY APPROVED

1/7/10

NOA No. 09-1103.05
Expiration Date: January 27, 2015
Approval Date: January 27, 2010

Best Rolling Doors, Inc.

NOTICE OF ACCEPTANCE: EVIDENCE SUBMITTED

A. DRAWINGS

1. Drawing No. **6565_2009_02**, titled "Model S10-6565", sheets 1 through 3 of 3, dated 04/06/09, prepared by Best Rolling Door, Inc, signed and sealed by Joseph H. Dixon, Jr., P.E.

B. TESTS

1. Test reports on 1) Uniform Static Air Pressure Test, Loading per FBC, TAS 202-94
   2) Large Missile Impact Test per FBC, TAS 201-94
   3) Cyclic Wind Pressure Loading per FBC, TAS 203-94
   4) Tensile Test per ASTM A370-05,

   Along with marked-up drawings and installation diagram of Model S10-6565 Steel Garage Doors, prepared by Fenestration Testing Laboratory, Inc., Test Report No. **FTL # 5589**, dated 01/13/09, signed and sealed by Michael R. Wenzel, P.E.

C. CALCULATIONS

1. Calculations for attachment of "C" channel guide to steel or concrete jamb, dated 07/23/09, prepared, signed and sealed by Joseph H. Dixon, Jr., P.E.

D. QUALITY ASSURANCE

1. Miami Dade Building Code Compliance Office (BCCO)

E. MATERIAL CERTIFICATIONS

1. Notice of Acceptance No. **07-1107.08**, issued to Dyplast Products, LLC, for their Expanded Polystyrene Block Type Insulation, approved on 02/28/08 and expiring on 01/11/12.

F. STATEMENTS

1. Statement letter of code conformance, dated 10/16/09, signed and sealed by Joseph H. Dixon, Jr., P.E.
2. Statement letter of no financial interest, dated 10/16/09, signed and sealed by Joseph H. Dixon, Jr., P.E.

1/7/10

Carlos M. Utrera, P.E.
Product Control Examiner
NOA No. 09-1103.05
Expiration Date: January 27, 2015
Approval Date: January 27, 2010

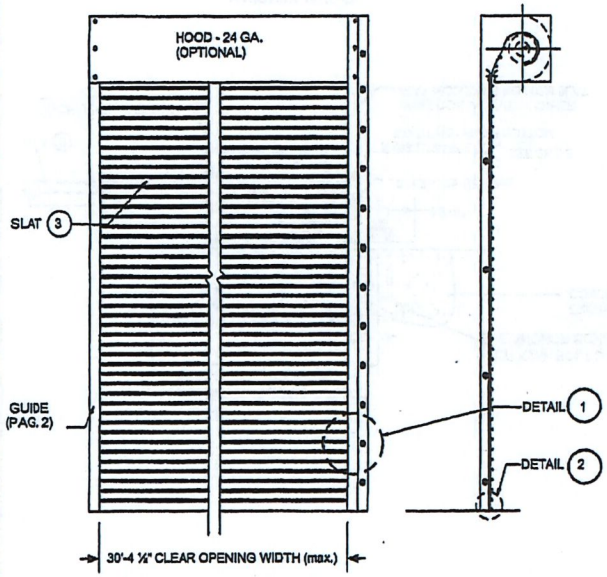

COILSIDE ELEVATION

SIDE ELEVATION

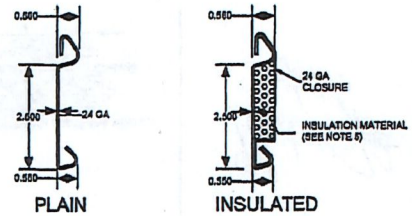

FLAT SLAT – DETAIL 3

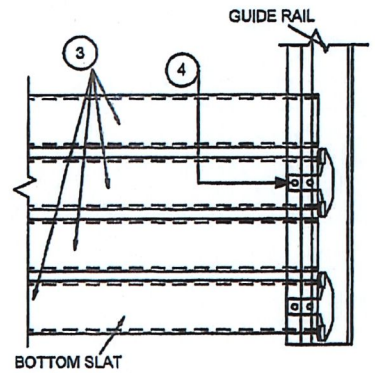

ELEVATION - DETAIL 1

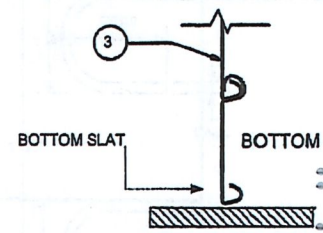

BOTTOM SLAT – DETAIL 2

GENERAL NOTES:

1- THE ROLL-UP DOOR SHOWN ON THIS PRODUCT APPROVAL DOCUMENT HAS BEEN DESIGNED IN ACCORDANCE WITH THE 2007 EDITION OF THE FLORIDA BUILDING CODE. REQUIRED DESIGN WIND LOADS SHALL BE DETERMINED AS PER SECTION 1620 & 1609 OF THE FBC, FOR A BASIC WIND SPEED OF 146 M.P.H.

THE ROLL-UP DOOR'S ADEQUACY FOR WIND PRESSURE,IMPACT AND FATIGUE RESISTANCE HAS BEEN VERIFIED IN ACCORDANCE WITH THE 2007 TEST PROTOCOLS FOR HIGH VELOCITY HURRICANE ZONES, TAS-201, TAS-202 & TAS-203.

DESIGN PRESSURE RATING: +65.0, -65.0 PSF

2- SLAT TO BE A.S.T.M. A-653 GR 50 STRUCTURAL QUALITY STEEL WITH MIN. FY = 50 KSI AND G-90 GALVANIZING PER A.S.T.M. A-653, OR A.I.S.I. 304 SERIES STAINLESS STEEL MANUFACTURED WITH A MINIMUM YIELD STRENGTH OF FY = 50 KSI.

3- WINDLOCKS 11 GA PLATED STEEL. ASTM A-1011

4- ALL RIVETS TO BE A.I.S.I. 1035 STEEL, CADMIUM PLATED, STAINLESS STEEL OR ZINC PLATED W/ FY= 37,000 PSI.

5- INSULATION MATERIAL SHALL BE EPS-EXPANDED POLYSTYRENE INSULATION MANUFACTURED BY DYPLAST PRODUCTS LLC COMPANY, DADE COUNTY NOTICE OF ACCEPTANCE # 07-1107.08.

6- DOOR MAY BE INSTALLED ON THE INSIDE OR OUTSIDE OF AN EXTERIOR WALL. DOOR IMPACTED ON BOTH SIDE.

7- GUIDE DETAILS CAN BE USED IN ANY COMBINATION.

8- COLD FORMED STEEL GUIDE TO HAVE MINIMUM YIELD STRENGTH OF 43 KSI.

9- CONTRACTOR TO BE RESPONSIBLE FOR THE SELECTION, PURCHASE AND INSTALLATION OF THIS PRODUCT BASED ON THIS PRODUCT APPROVAL DOCUMENT. THE CONTRACTOR SHALL ENSURE THAT THE WALL CAN SUPPORT THE JAMB FORCES INDICATE ON THIS DOCUMENT. CONSTRUCTION SAFETY AT SITE IS THE CONTRACTOR'S RESPONSIBILITY.

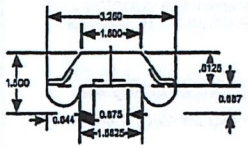

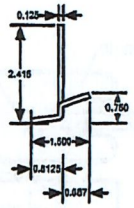

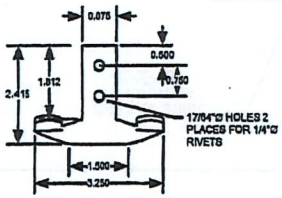

WINDLOCKS – DETAIL 4

Approved as complying with the Florida Building Code
Date 01/21/2010
NOA# 07-1107.05
Miami Dade Product Control Division
By

10/16/09

DADE COUNTY APPROVAL
2007 Florida Building Code

ROLLING STEEL DOOR
30'-4 1/2" (+65/-65 PSF)

ENG. NAME: JOSEPH H. DIXON JR. P.E.
FL 7768

Model S10-6565

BEST ROLLING DOOR, MFG

9760 N.W. 79th AVENUE
HIALEAH GARDENS, FLORIDA 33016
PH: 305-698-3550 FAX: 305-698-3552
www.bestdoor.us

DRAWN BY
B.D.

DATE
04/08/09

DRAWN No
6565_2009_02

SHEET 1 OF 3

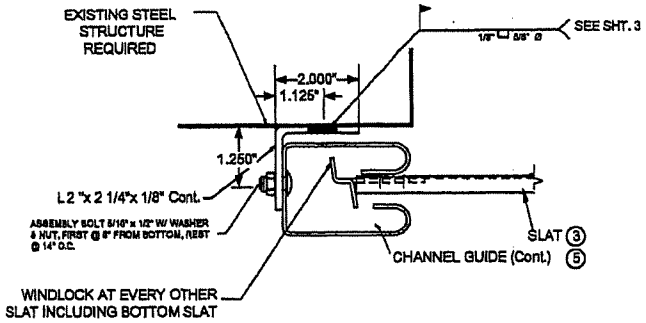

STEEL JAMB "E"

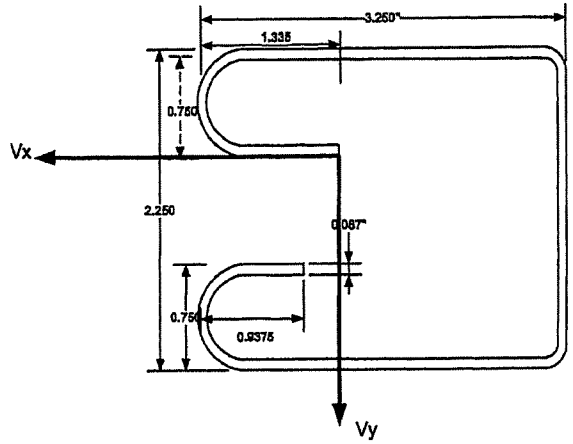

CHANNEL GUIDE – DETAIL 5

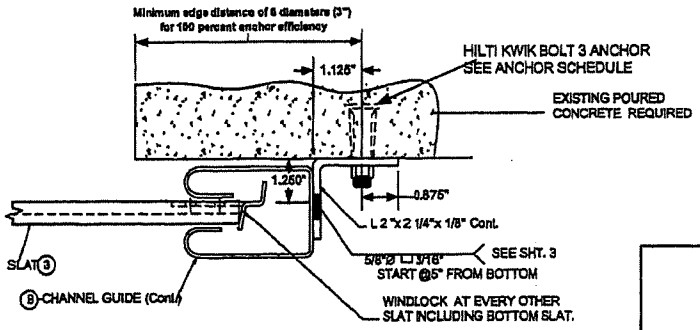

MASONRY JAMB "Z"

Approved as complying with the Florida Building Code
Date 01/27/2010
NOA# 09-1103.05
Miami Dade Product Control Division
By

10/16/09

DADE COUNTY APPROVAL
2007 Florida Building Code

ROLLING STEEL DOOR
30'-4 1/2" (+65/-65 PSF)

ENG. NAME: JOSEPH P. DIXON JR. P.E.
FL 7768

Model S10-6565

BEST ROLLING DOOR, MFG.
9780 N.W. 79th AVENUE
HIALEAH GARDENS, FLORIDA 33016
PH: 305-698-3550 FAX: 305-698-3552
www.bestdoor.us

DRAWN BY B.D.
DATE 04/06/09

DRAWN No 6565_2009-02
SHEET 2 OF 3

SUMMARY OF ANCHORAGE CALCULATIONS

	Best Rolling Doors				
	24 gage slat, 0.0239" Design Wind Load +/- 65 psf				
	12'-0" wide	16'-0" wide	20'-0" wide	25'-0" wide	30-4 ½" wide
Slip	0.500 in	1.00 in	1.50 in	1.50 in	1.50 in
Catenary Force					
Positive Wind, P1pf	1693 plf	2002 plf	2374 plf	3367 plf	4525 plf
Negative Wind, P1nf	1693 plf	2002 plf	2374 plf	3367 plf	4525 plf
Vx and Vy Forces					
Positive Wind, Vx	1659 plf	1943 plf	2290 plf	3271 plf	4418 plf
Negative Wind, Vx	1659 plf	1943 plf	2290 plf	3271 plf	4418 plf
Positive Wind, Vy	393 plf	523 plf	653 plf	815 plf	990 plf
Negative Wind, Vy	393 plf	523 plf	653 plf	815 plf	990 plf
C-Guide, welded					
Electrode type	E70xx	E70xx	E70xx	E70xx	E70xx
A. *Weld, guide to wall angle, Outstanding leg only*					
Hole diameter	5/8"	5/8"	5/8"	5/8"	5/8"
Weld type	Plug	plug	plug	plug	plug
Weld thickness	1/8"	1/8"	1/8"	1/8"	1/8"
Spacing	14" o.c.	14" o.c.	14" o.c.	13" o.c.	10" o.c.
B. *Weld, wall angle to jamb*					
Hole diameter	5/8"	5/8"	5/8"	5/8"	5/8"
Weld type	Plug	plug	plug	plug	plug
Weld thickness	1/8"	1/8"	1/8"	1/8"	1/8"
Spacing	14" o.c.	14" o.c.	13" o.c.	9" o.c.	7" o.c.
C-Guide, concrete anchors					
Concrete strength, fc	4000 psi	4000 psi	4000 psi	4000 psi	4000 psi
Positive Wind					
anchor tension, F1ZCp	467 plf	547 plf	691 plf	920 plf	1243 plf
compression, F2ZCp	74 plf	24 plf	38 plf	105 plf	253 plf
shear, F3ZCp	1659 plf	1943 plf	2290 plf	3271 plf	4418 plf
Negative Wind					
anchor tension, F1ZCn	638 plf	747 plf	880 plf	1257 plf	1698 plf
compression, F2ZCn	1030 plf	1269 plf	1533 plf	2072 plf	2688 plf
shear, F3ZCn	1659 plf	1943 plf	2290 plf	3271 plf	4418 plf
Type anchor, Hilti	Kwik Bolt 3	Kwik Bolt 3	Kwik Bolt 3	Kwik Bolt 3	Kwik Bolt 3
Diameter	5/8"	5/8"	5/8"	5/8"	5/8"
Embedment	4"	4"	4"	4"	4"
Spacing	16"	16" o.c.	13 ½" o.c.	9 ½" o.c.	6 ½" o.c.

Vx and Vy FORCES FOR VARIOUS DESIGN WIND LOADS

24 gage slat (0.0239")

Design Wind Load (psf)	Opening Width	Design Slip (in.)	Vx (lb/ft)	Vy (lb/ft)
+50 / -50	12'-0"	½	1213	302
	16'-0"	1	1459	402
	20'-0"	1 ½	1739	502
	25'-0"	1 ½	2501	627
	30'-4 ½"	1 ½	3389	761
+55 / -55	12'-0"	½	1362	332
	16'-0"	1	1620	442
	20'-0"	1 ½	1923	552
	25'-0"	1 ½	2758	690
	30'-4 ½"	1 ½	3732	838
+60 / -60	12'-0"	½	1510	362
	16'-0"	1	1782	483
	20'-0"	1 ½	2106	603
	25'-0"	1 ½	3014	752
	30'-4 ½"	1 ½	4075	914
+65 / -65	12'-0"	½	1659	393
	16'-0"	1	1943	523
	20'-0"	1 ½	2290	653
	25'-0"	1 ½	3271	815
	30'-4 ½"	1 ½	4418	990

Approved as complying with the Florida Building Code
Date 01/27/2010
NOA# 09-1103.05
Miami Dade Product Control Division
By

10/16/09

DADE COUNTY APPROVAL
2007 Florida Building Code
ROLLING STEEL DOOR
30'-4 1/2" (+65/-65 PSF)

ENG. NAME: JOSEPH H. DIXON JR. P.E.
FL 77668

Model S10-6565

BEST ROLLING DOOR, MFG
9780 N.W. 79th AVENUE
HIALEAH GARDENS, FLORIDA 33016
PH: 305-698-3550 FAX: 305-698-3552
www.bestdoor.us

DRAWN BY B.D.
DATE 04/08/09

DRAWN No 6565_2005_02
SHEET 3 OF 3

MIAMI-DADE COUNTY
BUILDING CODE COMPLIANCE OFFICE (BCCO)
PRODUCT CONTROL DIVISION

MIAMI-DADE COUNTY, FLORIDA
METRO-DADE FLAGLER BUILDING
140 WEST FLAGLER STREET, SUITE 1603
MIAMI, FLORIDA 33130-1563
(305) 375-2901 FAX (305) 372-6339
www.miamidade.gov/buildingcode

NOTICE OF ACCEPTANCE (NOA)

ES Windows LLC
10653 NE Quaybridge Ct.
Miami, FL 33138

SCOPE:

This NOA is being issued under the applicable rules and regulations governing the use of construction materials. The documentation submitted has been reviewed by Miami-Dade County Product Control Division and accepted by the Board of Rules and Appeals (BORA) to be used in Miami Dade County and other areas where allowed by the Authority Having Jurisdiction (AHJ).

This NOA shall not be valid after the expiration date stated below. The Miami-Dade County Product Control Division (In Miami Dade County) and/or the AHJ (in areas other than Miami Dade County) reserve the right to have this product or material tested for quality assurance purposes. If this product or material fails to perform in the accepted manner, the manufacturer will incur the expense of such testing and the AHJ may immediately revoke, modify, or suspend the use of such product or material within their jurisdiction. BORA reserves the right to revoke this acceptance, if it is determined by Miami-Dade County Product Control Division that this product or material fails to meet the requirements of the applicable building code.

This product is approved as described herein, and has been designed to comply with the Florida Building Code, including the High Velocity Hurricane Zone.

DESCRIPTION: Series 1500 Aluminum Fixed Window – L.M.I.

APPROVAL DOCUMENT: Drawing No. **W03-57**, titled "Series-1500 Aluminum Fixed Window (L.M.I.)", sheets 1 through 7 of 7, prepared by Al-Farooq Corporations, dated 07/31/03 with revision D dated 03/26/08, signed and sealed by Humayoun Farooq, P.E., bearing the Miami-Dade County Product Control Revision stamp with the Notice of Acceptance number and expiration date by the Miami-Dade County Product Control Division.

MISSILE IMPACT RATING: Large and Small Missile Impact Resistant

LABELING: Each unit shall bear a permanent label with the manufacturer's name or logo, city, state and following statement: "Miami-Dade County Product Control Approved", unless otherwise noted herein.

RENEWAL of this NOA shall be considered after a renewal application has been filed and there has been no change in the applicable building code negatively affecting the performance of this product.

TERMINATION of this NOA will occur after the expiration date or if there has been a revision or change in the materials, use, and/or manufacture of the product or process. Misuse of this NOA as an endorsement of any product, for sales, advertising or any other purposes shall automatically terminate this NOA. Failure to comply with any section of this NOA shall be cause for termination and removal of NOA.

ADVERTISEMENT: The NOA number preceded by the words Miami-Dade County, Florida, and followed by the expiration date may be displayed in advertising literature. If any portion of the NOA is displayed, then it shall be done in its entirety.

INSPECTION: A copy of this entire NOA shall be provided to the user by the manufacturer or its distributors and shall be available for inspection at the job site at the request of the Building Official.

This NOA **revises and renews NOA # 06-1201.05** and consists of this page 1 and evidence pages E-1 and E-2, as well as approval document mentioned above.

The submitted documentation was reviewed by **Manuel Perez, P.E.**

MIAMI-DADE COUNTY APPROVED

NOA No. 08-0417.06
Expiration Date: November 6, 2013
Approval Date: June 5, 2008
Page 1

ES Windows LLC

NOTICE OF ACCEPTANCE: EVIDENCE SUBMITTED

A. DRAWINGS

1. Manufacturer's die drawings and sections.
2. Drawing No. **W03-57**, titled "Series-1500 Aluminum Fixed Window (L.M.I.)", sheets 1 thru 7 of 7, prepared by Al-Farooq Corporations, dated 07/31/03 with revision D dated 03/26/08, signed and sealed by Humayoun Farooq, P.E.

B. TESTS

1. Test reports on: 1) Air Infiltration Test, per FBC, TAS 202-94
   2) Uniform Static Air Pressure Test, Loading per FBC TAS 202-94
   3) Large Missile Impact Test per FBC, TAS 201-94
   4) Cyclic Wind Pressure Loading per FBC, TAS 203-94

   along with marked-up drawings and installation diagram of a series 1500 aluminum fixed window, prepared by Fenestration Testing Laboratory, Inc., Test Report No. **FTL-5339**, dated 02/11/08, signed and sealed by Michael R. Wenzel, P.E.
2. Test reports on: 1) Air Infiltration Test, per FBC, TAS 202-94
   2) Uniform Static Air Pressure Test, Loading per FBC TAS 202-94
   3) Water Resistance Test, per FBC, TAS 202-94
   4) Large Missile Impact Test per FBC, TAS 201-94
   5) Cyclic Wind Pressure Loading per FBC, TAS 203-94

   along with marked-up drawings and installation diagram of an arch, round top & cathedral shapes aluminum fixed windows, prepared by Fenestration Testing Laboratory, Inc., Test Report No. **FTL-5054**, dated 10/03/06, signed and sealed by Edmundo Largaespada, P.E. ***(Submitted under previous NOA#06-0308.05)***
3. Test reports on: 1) Air Infiltration Test, per FBC, TAS 202-94
   2) Uniform Static Air Pressure Test, Loading per FBC, TAS 202-94
   3) Water Resistance Test, per FBC, TAS 202-94
   4) Large Missile Impact Test, per FBC, TAS 201-94
   5) Cyclic Wind Pressure Loading, per FBC, TAS 203-94

   along with marked-up drawings and installation diagram of an aluminum fixed window, prepared by Fenestration Testing Laboratory, Inc., Test Report No. **FTL-3810**, dated 05/16/03, signed & sealed by Joseph Chan, P.E.
   (Submitted under previous NOA#03-0910.01)
4. Test reports on: 1) Air Infiltration Test, per FBC, TAS 202-94
   2) Uniform Static Air Pressure Test, Loading per FBC, TAS 202-94
   3) Water Resistance Test, per FBC, TAS 202-94
   4) Large Missile Impact Test, per FBC, TAS 201-94
   5) Cyclic Wind Pressure Loading, per FBC, TAS 203-94

   along with marked-up drawings and installation diagram of a alum. fixed windows mulled together, prepared by Fenestration Testing Laboratory, Inc. Test Report No. **FTL-3819**, dated 06/09/03, signed & sealed by Joseph Chan, P.E.
   (Submitted under previous NOA#03-0910.01)

Manuel Perez, P.E.
Product Control Examiner
NOA No. 08-0417.06
Expiration Date: November 6, 2013
Approval Date: June 5, 2008

5. Test reports on: 1) Air Infiltration Test, per FBC, TAS 202-94
   2) Uniform Static Air Pressure Test, Loading per FBC, TAS 202-94
   3) Water Resistance Test, per FBC, TAS 202-94
   4) Large Missile Impact Test, per FBC, TAS 201-94
   5) Cyclic Wind Pressure Loading, per FBC, TAS 203-94

   along with marked-up drawings and installation diagram of an aluminum fixed window, prepared by Fenestration Testing Laboratory, Inc., Test Report No. **FTL-3808**, dated 05/14/03, signed & sealed by Joseph Chan, P.E.
   (Submitted under previous NOA#03-0910.01)

C. CALCULATIONS

1. Anchor verification calculations and structural analysis, complying with FBC-2004, prepared by Al-Farooq Corporation, dated 4/7/08, signed and sealed by Humayoun Farooq, P.E.
   Complies with ASTM E1300-02

D. QUALITY ASSURANCE

1. Miami Dade Building Code Compliance Office (BCCO).

E. MATERIAL CERTIFICATIONS

1. Notice of Acceptance No. **07-1116.04** issued to E.I. DuPont DeNemours & Co., Inc. for their "**DuPont SentryGlas ® Plus**" dated 01/03/08, expiring on 01/14/12.
2. Notice of Acceptance No. **05-1208.02** issued to E.I. DuPont DeNemours & Co., Inc. for their "**DuPont Butacite PVB Interlayer**" dated 01/05/06, expiring on 12/11/10.

F. STATEMENTS

1. Statement letter of conformance, dated March 26, 2008, signed and sealed by Humayoun Farooq, P.E.
2. Statement letter of no financial interest, dated March 26, 2008, signed and sealed by Humayoun Farooq, P.E.
3. Laboratory compliance letter for Test Report no. **FTL-5339**, issued by Fenestration Testing Laboratory, Inc., dated February 7, 2008, signed and sealed by Michael R. Wenzel, P.E.

G. OTHER

1. Notice of Acceptance No. **06-1201.05**, issued to ES Windows, Inc., for their Series 1500 Aluminum Fixed Window – L.M.I., approved on 02/01/07 and expiring on 11/06/08.

Manuel Perez, P.E.
Product Control Examiner
NOA No. 08-0417.06
Expiration Date: November 6, 2013
Approval Date: June 5, 2008

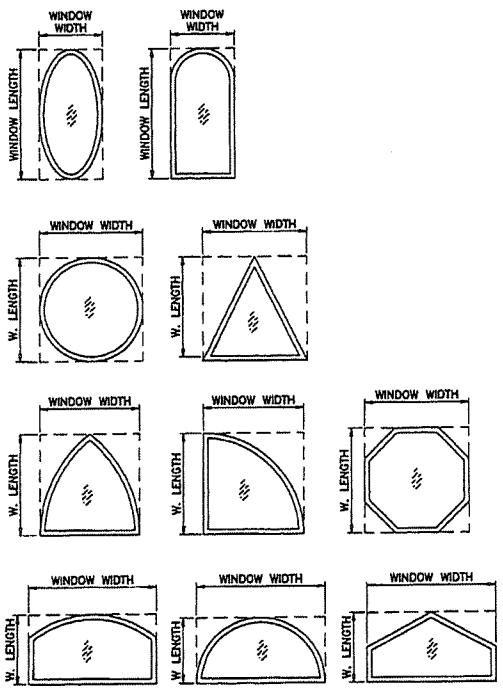

ALLOWABLE LOADS FOR ALTERNATE SHAPES AS SHOWN ABOVE OR SIMILAR CAN BE VERIFIED BY INSCRIBING PICTURE WINDOW SHAPE WITHIN SQUARE OR RECTANGLE AS SHOWN IN DOTTED LINES AND OBTAINING ALLOWABLE LOADS FROM THOSE SHAPES.

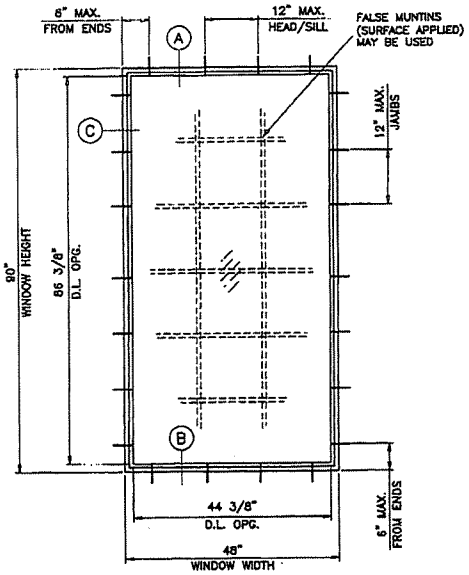

TYPICAL ELEVATION

SERIES-1500 ALUMINUM FIXED WINDOW

APPROVAL APPLIES TO SINGLE UNITS OR SIDE BY SIDE COMBINATIONS OF FIXED/FIXED OR FIXED WITH OTHER MIAMI-DADE COUNTY APPR'D WINDOWS USING MIAMI-DADE COUNTY APPROVED MULLIONS IN BETWEEN.
LOWER DESIGN PRESSURE FROM WINDOWS OR MULLION APPROVAL WILL APPLY TO ENTIRE SYSTEM.

DESIGN LOAD RATING FOR THESE WINDOWS TO BE AS PER CHARTS ON SHEETS 2 & 3.

THIS PRODUCT HAS BEEN DESIGNED AND TESTED TO COMPLY WITH THE REQUIREMENTS OF THE FLORIDA BUILDING CODE 2004/2007 EDITION INCLUDING HIGH VELOCITY HURRICANE ZONE (HVHZ).

WOOD BUCKS BY OTHERS, MUST BE ANCHORED PROPERLY TO TRANSFER LOADS TO THE STRUCTURE.

ANCHORS SHALL BE AS LISTED, SPACED AS SHOWN ON DETAILS, ANCHORS EMBEDMENT TO BASE MATERIAL SHALL BE BEYOND WALL DRESSING OR STUCCO.

ANCHORING OR LOADING CONDITIONS NOT SHOWN IN THESE DETAILS ARE NOT PART OF THIS APPROVAL.

A LOAD DURATION INCREASE IN ALLOWABLE STRESS IS USED IN DESIGN OF ANCHORS INTO WOOD ONLY.

MATERIALS INCLUDING BUT NOT LIMITED TO STEEL/METAL SCREWS, THAT COME INTO CONTACT WITH OTHER DISSIMILAR MATERIALS SHALL MEET THE REQUIREMENTS OF 2004 FLORIDA BLDG. CODE SECTION 2003.8.4.

THESE WINDOWS ARE RATED FOR LARGE MISSILE IMPACT. SHUTTERS ARE NOT REQUIRED.

Engr: DR. HUMAYOUN FAROOQ
STRUCTURES
FLA. PE # 16557
C.A.N. 3538

APR 0 9 2008

PRODUCT REVIEWED as complying with the Florida Building Code
Acceptance No. 08-0417.06
Expiration Date NOV. 6, 2013
By Manuel Perez
Miami Dade Product Control Division

AL-FAROOQ CORPORATION
ENGINEERS & PRODUCT DEVELOPMENT
1235 S.W. 87 AVE
MIAMI, FLORIDA 33174
TEL. (305) 264-8100 FAX. (305) 262-6978
COMP-ANL\W03-57ESW

SERIES-1500 ALUMINUM FIXED WINDOW (L.M.I.)

E.S. WINDOWS
5220 N.W. 72 AVE. BAY #4
MIAMI, FL. 33166
TEL. (305) 640-9857 FAX. (305) 593-2074

revisions:			
no	date	by	description
A	09.24.03		NO CHANGE THIS SHEET
B	09.05.05		UPDATED FOR 2004 FBC
C	11.11.06		SHAPES ADDED
D	03.26.08		NOTE REV.

date: 07-31-03
scale: 3/2"=1'-0"
dr. by: HAMID
chk. by:

drawing no. W03-57

sheet 1 of 7

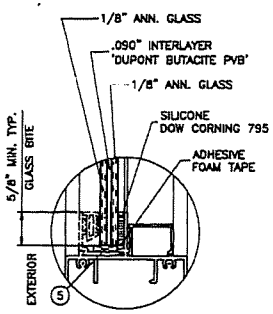

GLASS TYPE 'A'

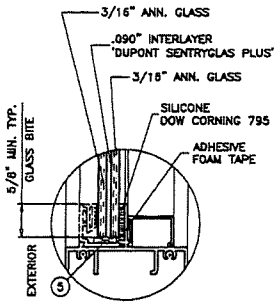

GLASS TYPE 'B'

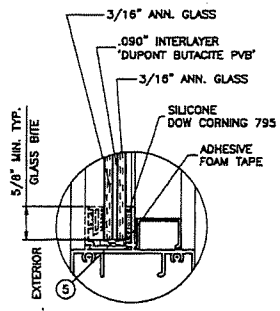

GLASS TYPE 'B1'

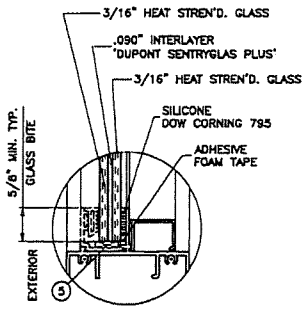

GLASS TYPE 'C'

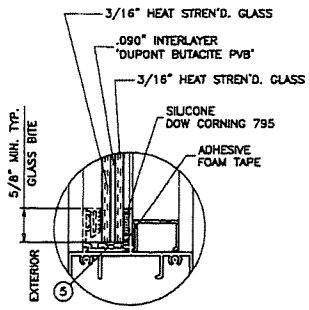

GLASS TYPE 'C1'

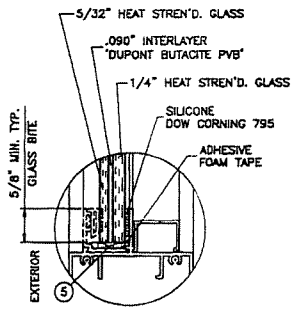

GLASS TYPE 'C2'

DESIGN LOAD CAPACITY – PSF

WINDOW DIMS.		ANCHOR TYPES 'A' & 'C'						ANCHOR TYPES 'B' & 'C'					
		GLASS TYPE 'A'		GLASS TYPES 'B' & 'B1'		GLASS TYPES 'C', 'C1' & 'C2'		GLASS TYPE 'A'		GLASS TYPES 'B' & 'B1'		GLASS TYPES 'C', 'C1' & 'C2'	
WIDTH	HEIGHT	EXT.(+)	INT.(−)	EXT.(+)	INT.(−)	EXT.(+)	INT.(−)	EXT.(+)	INT.(−)	EXT.(+)	INT.(−)	EXT.(+)	INT.(−)
19-1/8"	26"	70.0	70.0	70.0	90.0	70.0	80.0	70.0	70.0	70.0	90.0	70.0	80.0
26-1/2"		70.0	70.0	70.0	90.0	70.0	80.0	70.0	70.0	70.0	90.0	70.0	80.0
37"		66.5	66.5	66.5	66.5	66.5	66.5	70.0	70.0	70.0	90.0	70.0	80.0
48"		66.5	66.5	66.5	66.5	66.5	66.5	70.0	70.0	70.0	90.0	70.0	80.0
53-1/8"		66.5	66.5	66.5	66.5	66.5	66.5	70.0	70.0	70.0	90.0	70.0	80.0
19-1/8"	38-3/8"	70.0	70.0	70.0	90.0	70.0	80.0	70.0	70.0	70.0	90.0	70.0	80.0
26-1/2"		65.2	65.2	65.2	65.2	65.2	65.2	70.0	70.0	70.0	90.0	70.0	80.0
37"		46.7	46.7	46.7	46.7	46.7	46.7	68.1	68.1	70.0	90.0	70.0	80.0
48"		45.0	45.0	45.0	45.0	45.0	45.0	65.7	65.7	70.0	90.0	70.0	80.0
53-1/8"		45.0	45.0	45.0	45.0	45.0	45.0	65.7	65.7	70.0	90.0	70.0	80.0
19-1/8"	50-5/8"	70.0	70.0	70.0	90.0	70.0	80.0	70.0	70.0	70.0	90.0	70.0	80.0
26-1/2"		65.2	65.2	65.2	65.2	65.2	65.2	70.0	70.0	70.0	90.0	70.0	80.0
37"		46.7	46.7	46.7	46.7	46.7	46.7	68.1	68.1	70.0	90.0	70.0	80.0
48"		–	–	36.0	36.0	36.0	36.0	–	–	70.0	90.0	70.0	80.0
53-1/8"		–	–	34.1	34.1	34.1	34.1	–	–	66.4	85.3	66.4	75.9
19-1/8"	58"	70.0	70.0	70.0	90.0	70.0	80.0	70.0	70.0	70.0	90.0	70.0	80.0
26-1/2"		65.2	65.2	65.2	65.2	65.2	65.2	70.0	70.0	70.0	90.0	70.0	80.0
37"		46.7	46.7	46.7	46.7	46.7	46.7	68.1	68.1	70.0	90.0	70.0	80.0
48"		–	–	36.0	36.0	36.0	36.0	–	–	70.0	90.0	70.0	80.0
53-1/8"		–	–	–	–	32.5	32.5	–	–	–	–	63.2	72.3
19-1/8"	63"	70.0	70.0	70.0	90.0	70.0	80.0	70.0	70.0	70.0	90.0	70.0	80.0
26-1/2"		65.2	65.2	65.2	65.2	65.2	65.2	70.0	70.0	70.0	90.0	70.0	80.0
37"		–	–	46.7	46.7	46.7	46.7	–	–	70.0	90.0	70.0	80.0
48"		–	–	–	–	36.0	36.0	–	–	–	–	70.0	80.0
53-1/8"		–	–	–	–	32.5	32.5	–	–	–	–	63.2	72.3
19-1/8"	74-1/4"	70.0	70.0	70.0	90.0	70.0	80.0	70.0	70.0	70.0	90.0	70.0	80.0
26-1/2"		65.2	65.2	65.2	65.2	65.2	65.2	70.0	70.0	70.0	90.0	70.0	80.0
37"		–	–	46.7	46.7	46.7	46.7	–	–	70.0	90.0	70.0	80.0
48"		–	–	–	–	36.0	36.0	–	–	–	–	70.0	80.0
53-1/8"		–	–	–	–	32.5	32.5	–	–	–	–	63.2	72.3

NOTE:
GLASS CAPACITIES ON THIS SHEET ARE
BASED ON ASTM E1300-02/04 (3 SEC. GUSTS).

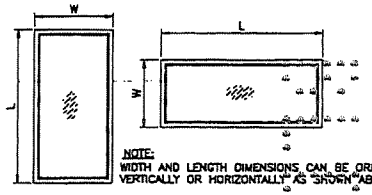

NOTE:
WIDTH AND LENGTH DIMENSIONS CAN BE ORIENTED VERTICALLY OR HORIZONTALLY AS SHOWN ABOVE.

Engr: DR. HUMAYOUN FAROOQ
STRUCTURES
FLA. PE # 16957
C.A.N. 3538

APR 9 9 2008

PRODUCT REVISED
as complying with the Florida Building Code
Acceptance No. PB-06-1-06
Expiration Date 2011.12.2013
By
Miami-Dade Product Control Division

AL-FAROOQ CORPORATION
ENGINEERS & PRODUCT DEVELOPMENT
1235 S.W. 87 AVE
MIAMI, FLORIDA 33174
TEL. (305) 264-8100 FAX. (305) 262-6978
COMP-ANL\W03-57ESW

SERIES-1500 ALUMINUM FIXED WINDOW (L.M.I.)

E.S. WINDOWS
5220 N.W. 72 AVE. BAY #4
MIAMI, FL. 33166
TEL. (305) 640-9857 FAX. (305) 593-2074

revisions:			
no	date	by	description
A	08.25.03	E	REV. PER BCCO COMMENTS
B	02.04.05	E	CLARIFY REV.
C	11.01.06		SHAPES ADDED
D	03.26.08		GLASS TYPE C2 ADDED

date: 07-01-02
scale: 1/2"=1'-0"
drawn by: HAMID
chk. by:

drawing no.
W03-57
sheet 2 of 7

DESIGN LOAD CAPACITY – PSF

WINDOW DIMS.		ANCHOR TYPES 'A' & 'C'						ANCHOR TYPES 'B' & 'C'					
		GLASS TYPE 'A'		GLASS TYPES 'B' & 'B1'		GLASS TYPES 'C', 'C1' & 'C2'		GLASS TYPE 'A'		GLASS TYPES 'B' & 'B1'		GLASS TYPES 'C', 'C1' & 'C2'	
WIDTH	HEIGHT	EXT.(+)	INT.(−)	EXT.(+)	INT.(−)	EXT.(+)	INT.(−)	EXT.(+)	INT.(−)	EXT.(+)	INT.(−)	EXT.(+)	INT.(−)
18"	36"	70.0	70.0	70.0	90.0	70.0	80.0	70.0	70.0	70.0	90.0	70.0	80.0
24"		70.0	70.0	70.0	72.0	70.0	72.0	70.0	70.0	70.0	90.0	70.0	80.0
30"		57.6	57.6	57.6	57.6	57.6	57.6	70.0	70.0	70.0	90.0	70.0	80.0
36"		48.0	48.0	48.0	48.0	48.0	48.0	70.0	70.0	70.0	90.0	70.0	80.0
42"		48.0	48.0	48.0	48.0	48.0	48.0	70.0	70.0	70.0	90.0	70.0	80.0
48"		48.0	48.0	48.0	48.0	48.0	48.0	70.0	70.0	70.0	90.0	70.0	80.0
54"		48.0	48.0	48.0	48.0	48.0	48.0	70.0	70.0	70.0	90.0	70.0	80.0
60"		48.0	48.0	48.0	48.0	48.0	48.0	67.3	67.3	70.0	90.0	70.0	80.0
18"	48"	70.0	70.0	70.0	90.0	70.0	80.0	70.0	70.0	70.0	90.0	70.0	80.0
24"		70.0	70.0	70.0	72.0	70.0	72.0	70.0	70.0	70.0	90.0	70.0	80.0
30"		57.6	57.6	57.6	57.6	57.6	57.6	70.0	70.0	70.0	90.0	70.0	80.0
36"		48.0	48.0	48.0	48.0	48.0	48.0	70.0	70.0	70.0	90.0	70.0	80.0
42"		41.1	41.1	41.1	41.1	41.1	41.1	60.0	60.0	70.0	90.0	70.0	80.0
48"		–	–	36.0	36.0	36.0	36.0	–	–	70.0	90.0	70.0	80.0
54"		–	–	36.0	36.0	36.0	36.0	–	–	70.0	90.0	70.0	80.0
60"		–	–	36.0	36.0	36.0	36.0	–	–	70.0	90.0	70.0	80.0
18"	60"	70.0	70.0	70.0	90.0	70.0	80.0	70.0	70.0	70.0	90.0	70.0	80.0
24"		70.0	70.0	70.0	72.0	70.0	72.0	70.0	70.0	70.0	90.0	70.0	80.0
30"		57.6	57.6	57.6	57.6	57.6	57.6	70.0	70.0	70.0	90.0	70.0	80.0
36"		48.0	48.0	48.0	48.0	48.0	48.0	67.3	67.3	70.0	90.0	70.0	80.0
42"		–	–	41.1	41.1	41.1	41.1	–	–	70.0	90.0	70.0	80.0
48"		–	–	36.0	36.0	36.0	36.0	–	–	70.0	90.0	70.0	80.0
54"		–	–	–	–	32.0	32.0	–	–	–	–	62.2	71.1
60"		–	–	–	–	28.8	28.8	–	–	–	–	56.0	64.0
18"	72"	70.0	70.0	70.0	90.0	70.0	80.0	70.0	70.0	70.0	90.0	70.0	80.0
24"		70.0	70.0	70.0	72.0	70.0	72.0	70.0	70.0	70.0	90.0	70.0	80.0
30"		57.6	57.6	57.6	57.6	57.6	57.6	64.2	64.2	70.0	90.0	70.0	80.0
36"		–	–	48.0	48.0	48.0	48.0	–	–	70.0	90.0	70.0	80.0
42"		–	–	–	–	41.1	41.1	–	–	–	–	70.0	80.0
48"		–	–	–	–	36.0	36.0	–	–	–	–	70.0	80.0
54"		–	–	–	–	32.0	32.0	–	–	–	–	62.2	71.1
60"		–	–	–	–	28.8	28.8	–	–	–	–	56.0	64.0
18"	84"	70.0	70.0	70.0	90.0	70.0	80.0	70.0	70.0	70.0	90.0	70.0	80.0
24"		70.0	70.0	70.0	72.0	70.0	72.0	70.0	70.0	70.0	90.0	70.0	80.0
30"		–	–	57.6	57.6	57.6	57.6	–	–	70.0	90.0	70.0	80.0
36"		–	–	–	–	48.0	48.0	–	–	–	–	70.0	80.0
42"		–	–	–	–	41.1	41.1	–	–	–	–	70.0	80.0
48"		–	–	–	–	36.0	36.0	–	–	–	–	70.0	80.0
18"	90"	70.0	70.0	70.0	90.0	70.0	80.0	70.0	70.0	70.0	90.0	70.0	80.0
24"		70.0	70.0	70.0	72.0	70.0	72.0	70.0	70.0	70.0	90.0	70.0	80.0
30"		–	–	57.6	57.6	57.6	57.6	–	–	70.0	90.0	70.0	80.0
36"		–	–	–	–	48.0	48.0	–	–	–	–	70.0	80.0
42"		–	–	–	–	41.1	41.1	–	–	–	–	70.0	80.0
48"		–	–	–	–	36.0	36.0	–	–	–	–	70.0	80.0
18"	96"	70.0	70.0	70.0	90.0	70.0	80.0	70.0	70.0	70.0	90.0	70.0	80.0
24"		–	–	70.0	72.0	70.0	72.0	–	–	70.0	90.0	70.0	80.0
30"		–	–	57.6	57.6	57.6	57.6	–	–	70.0	90.0	70.0	80.0
36"		–	–	–	–	48.0	48.0	–	–	–	–	70.0	80.0
42"		–	–	–	–	41.1	41.1	–	–	–	–	70.0	80.0

NOTE:
GLASS CAPACITIES ON THIS SHEET ARE
BASED ON ASTM E1300–02/04 (3 SEC. GUSTS).

DESIGN LOAD CAPACITY – PSF

WINDOW DIMS.		ANCHOR TYPES 'A' & 'C'						ANCHOR TYPES 'B' & 'C'					
		GLASS TYPE 'A'		GLASS TYPES 'B' & 'B1'		GLASS TYPES 'C', 'C1' & 'C2'		GLASS TYPE 'A'		GLASS TYPES 'B' & 'B1'		GLASS TYPES 'C', 'C1' & 'C2'	
WIDTH	HEIGHT	EXT.(+)	INT.(−)	EXT.(+)	INT.(−)	EXT.(+)	INT.(−)	EXT.(+)	INT.(−)	EXT.(+)	INT.(−)	EXT.(+)	INT.(−)
18"	108"	70.0	70.0	70.0	90.0	70.0	80.0	70.0	70.0	70.0	90.0	70.0	80.0
24"		–	–	70.0	72.0	70.0	72.0	–	–	70.0	90.0	70.0	80.0
30"		–	–	–	–	57.6	57.6	–	–	–	–	70.0	80.0
36"		–	–	–	–	48.0	48.0	–	–	–	–	70.0	80.0
18"	120"	56.2	56.2	70.0	90.0	70.0	80.0	56.2	56.2	70.0	90.0	70.0	80.0
24"		–	–	70.0	72.0	70.0	72.0	–	–	70.0	90.0	70.0	80.0
30"		–	–	–	–	57.6	57.6	–	–	–	–	70.0	80.0
36"		–	–	–	–	48.0	48.0	–	–	–	–	70.0	80.0

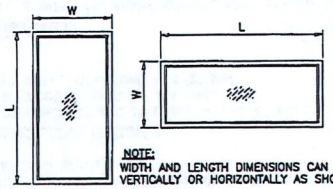

NOTE:
WIDTH AND LENGTH DIMENSIONS CAN BE ORIENTED VERTICALLY OR HORIZONTALLY AS SHOWN ABOVE.

Engr: DR. HUMAYOUN FAROOQ
STRUCTURES
FLA. PE # 18557
CA/FL 3538

APR 09 2008

PRODUCT REVIEWED
as complying with the Florida
Building Code
Acceptance No. 08-0417.06
Expiration Date NOV. 6, 2013
By
Miami-Dade Product Control
Division

AL-FAROOQ CORPORATION
ENGINEERS & PRODUCT DEVELOPMENT
1235 S.W. 87 AVE
MIAMI, FLORIDA 33174
TEL. (305) 264-8100 FAX. (305) 262-0978
COMP-ANL\W03-57ESW

SERIES–1500 ALUMINUM FIXED WINDOW (L.M.I.)

E.S. WINDOWS
5220 N.W. 72 AVE. BAY #4
MIAMI, FL. 33166
TEL. (305) 640-9857 FAX. (305) 593-2074

revisions:

no	date	by	description
A	09.25.03		REV. PER BCCO COMMENTS
B	06.03.04		CHGTS REV.
C	11.1.1.06		ELIMPES ADDED
D	03.26.08		GLASS TYPE C2 ADDED

date: 07-24-03
scale: 1/2"=1'-0"
dr. by: HAMID
chk. by:

drawing no.
W03–57

sheet 3 of 7

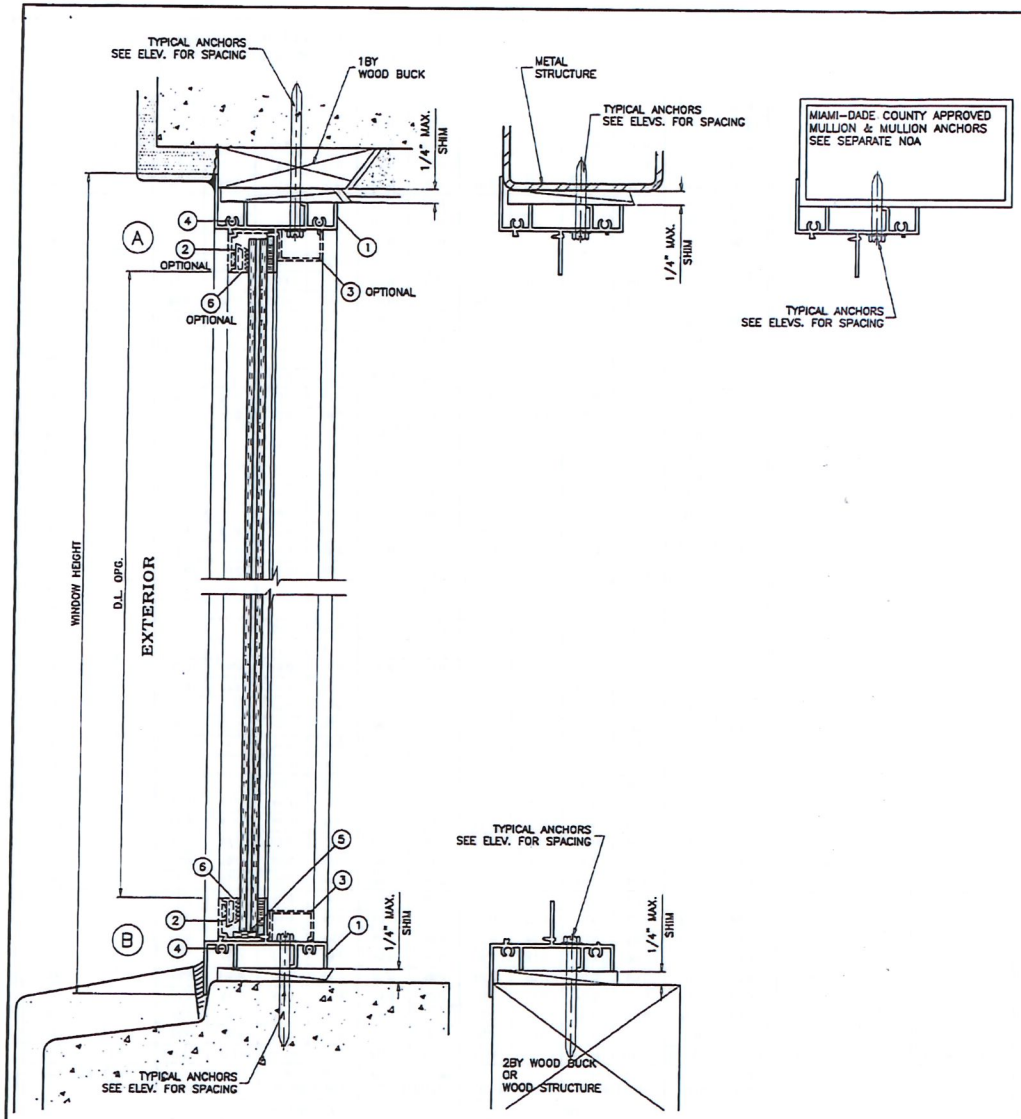

WOOD BUCKS AND METAL STRUCTURE NOT BY E.S. WINDOWS, MUST SUSTAIN LOADS IMPOSED BY GLAZING SYSTEM AND TRANSFER THEM TO THE BUILDING STRUCTURE.

TYPICAL ANCHORS: SEE ELEV. FOR SPACING

TYPE 'A'– 3/16" TAPCONS

INTO 2BY WOOD BUCKS OR WOOD STRUCTURE
1–3/8" MIN. PENETRATION INTO WOOD

THRU 1BY BUCKS INTO CONC. OR MASONRY
1–1/4" MIN. EMBED INTO CONC. OR MASONRY

DIRECTLY INTO CONC. OR MASONRY
1–1/4" MIN. EMBED INTO CONC. OR MASONRY

3/16" TEKS OR SELF DRILLING SCREWS (GRADE 5 CRS)

INTO METAL STRUCTURES
STEEL : 12 GA. MIN. (Fy = 36 KSI MIN.)
ALUMINUM : 1/8" THK. MIN. (6063–T5 MIN.)
(STEEL IN CONTACT WITH ALUMINUM TO BE PLATED OR PAINTED)

TYPE 'B'– 1/4" TAPCONS

INTO 2BY WOOD BUCKS OR WOOD STRUCTURE
1–3/8" MIN. PENETRATION INTO WOOD

THRU 1BY BUCKS INTO CONC. OR MASONRY
1–1/4" MIN. EMBED INTO CONC. OR MASONRY

DIRECTLY INTO CONC. OR MASONRY
1–1/4" MIN. EMBED INTO CONC. OR MASONRY

#14 SMS OR SELF DRILLING SCREWS

INTO METAL STRUCTURES
STEEL : 12 GA. MIN. (Fy = 36 KSI MIN.)
ALUMINUM : 1/8" THK. MIN. (6063–T5 MIN.)
(STEEL IN CONTACT WITH ALUMINUM TO BE PLATED OR PAINTED)

TYPE 'C'– #10 SMS OR SELF DRILLING SCREWS

INTO DADE COUNTY APPROVED MULLIONS
(NO SHIM SPACE)

ANCHOR EDGE DISTANCES:

INTO CONCRETE AND MASONRY = 1–3/8" MIN.
INTO WOOD STRUCTURE = 1" MIN.
INTO METAL STRUCTURE = 1/2" MIN.

SEALANT:

ALL JOINTS AND FRAME CONNECTIONS SEALED WITH WHITE/ALUM COLOR SILICONE.

Engr: DR. HUMAYOUN FAROOQ
STRUCTURES
FLA. PE # 16557
C.A.N. 3535

APR 0 9 2008

Acceptance No. 08-0317.06
Expiration Date NOV. 6, 2013
By Miami-Dade Product Control Division

AL-FAROOQ CORPORATION
ENGINEERS & PRODUCT DEVELOPMENT
1235 S.W. 87 AVE
MIAMI, FLORIDA 33174
TEL. (305) 264-8100 FAX. (305) 262-6978
COMP-ANL W03-57ESW

SERIES-1500 ALUMINUM FIXED WINDOW (L.M.I.)

E.S. WINDOWS
5220 N.W. 72 AVE. BAY #4
MIAMI, FL. 33166
TEL. (305) 640-9857 FAX. (305) 593-2074

revisions:

no	date	by	description
A	09.25.03		REV. PER BCCO COMMENTS
B	09.05.05		ANCHORS REV.
C	11.11.06		STAPES ADDED
D	03.26.08		NO CHANGE THIS SHEET

date: 07-31-03
scale: 1/2" = 1"
dr. by: HAMID
chk. by:

drawing no. W03-57

sheet 4 of 7

ITEM	PART #	QUANTITY	DESCRIPTION	MATERIAL	MANF./SUPPLIER/REMARKS
1	ES5001	4	WINDOW FRAME	6063-T5	–
2	ES2000-8	OPTIONAL	GLAZING STOP	6063-T6	–
3	ES5002	4	FRAME COVER (OPTIONAL)	6063-T5	–
4	#6 X 1"	AS REQD.	ASSEMBLY SCREWS	CRS	PH SMS
5	–	2/ LITE	SETTING BLOCK	NEOPRENE	7/16" X 3/16" X 3-1/2" LONG
6	ES2000-10	OPTIONAL	GLAZING GASKET	SOFT PVC	–
7	ES1505	–	FLUSH FRAME ADAPTER	6063-T5	OPTIONAL

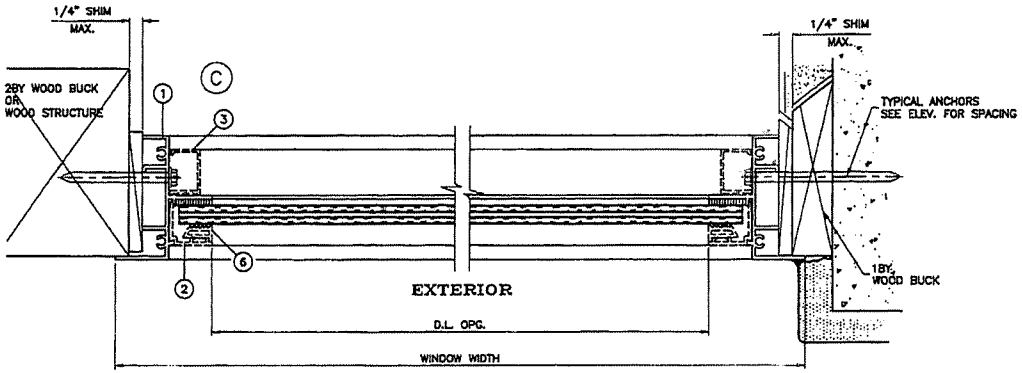

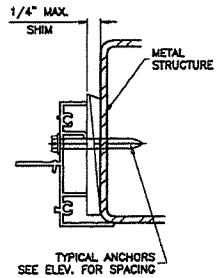

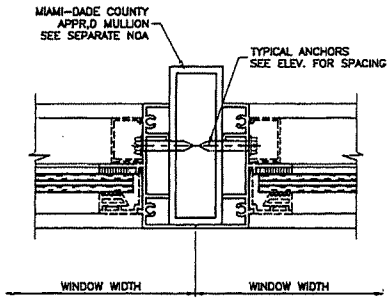

Engr: DR. HUMAYOUN FAROOQ
STRUCTURES
FLA. PE # 18557
C.A.N. 3538

APR 0 9 2006

PRODUCT REVISED
as complying with the Florida Building Code
Acceptance No. 08-0417.06
Expiration Date NOV. 6, 2013
By [signature]
Miami-Dade Product Control Division

AL-FAROOQ CORPORATION
ENGINEERS & PRODUCT DEVELOPMENT
1235 S.W. 87 AVE
MIAMI, FLORIDA 33174
TEL. (305) 264-8100 FAX. (305) 262-6978
COMP-ANL\W03-57ESW

SERIES-1500 ALUMINUM FIXED WINDOW (L.M.I.)

E.S. WINDOWS
5220 N.W. 72 AVE. BAY #4
MIAMI, FL. 33166
TEL. (305) 640-9857 FAX. (305) 593-2074

revisions:

no	date	by	description
A	09.25.03		REV. PER BCCO COMMENTS
B	09.05.03		ANCHORS REV.
C	11.11.04		SHAPES ADDED
D	03.26.06		NO CHANGE THIS SHEET

date: 07-31-03
scale: 1/2"=1'
dr. by: HAMID
chk. by:

drawing no.
W03-57
sheet 5 of 7

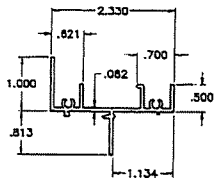

FRAME

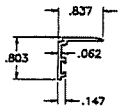

GLAZING STOP (OPTIONAL)

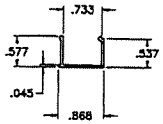

FRAME COVER (OPTIONAL)

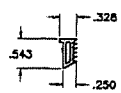

BULB VINYL (OPTIONAL)

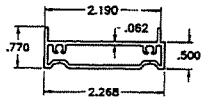

FLUSH FRAME ADAPTER

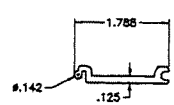

ALUM CORNER LOCK
(6063-T5)

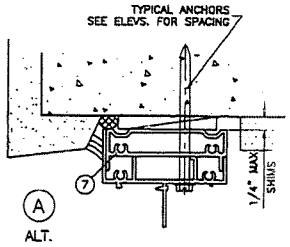

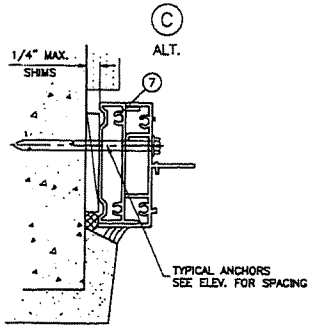

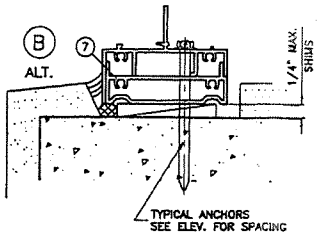

Engr: DR. HUMAYOUN FAROOQ
STRUCTURES
FLA. PE # 16557
C.A.N. 3538

APR 0 9 2008

PRODUCT REVISED
as complying with the Florida
Building Code
Acceptance No. 08-0417.06
Expiration Date Nov. 6, 2013
By [signature]
Miami-Dade Product Control
Division

AL-FAROOQ CORPORATION
ENGINEERS & PRODUCT DEVELOPMENT
1235 S.W. 87 AVE
MIAMI, FLORIDA 33174
TEL. (305) 264-8100 FAX. (305) 262-6978
COMP-ANL W03-57ESW

SERIES-1500 ALUMINUM FIXED WINDOW (L.M.I.)

E.S. WINDOWS
5220 N.W. 72 AVE. BAY #4
MIAMI, FL. 33166
TEL. (305) 640-9857 FAX. (305) 593-2074

revisions		
no	date	by description
A	09.25.03	NO CHANGE THIS SHEET
B	09.05.05	FRAME ADAPTER ADDED
C	11.11.04	SEAPTS ADDED
D	03.26.08	NO CHANGE THIS SHEET

drgn: 07-31-03
scale: 3/2" = 1'
drawn: EDMUND
chk. by:

drawing no. W03-57

sheet 6 of 7

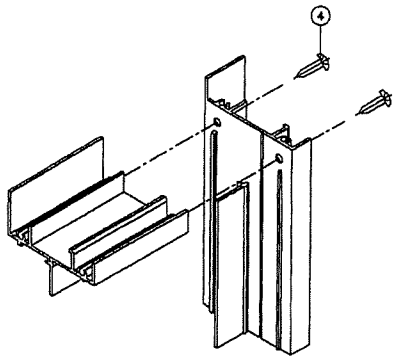

RECT. OR SQUARE WINDOWS

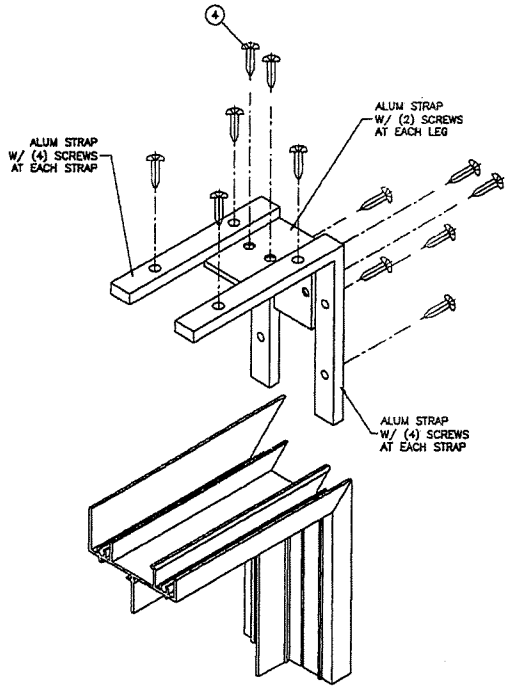

RECT. OR SQUARE WINDOWS

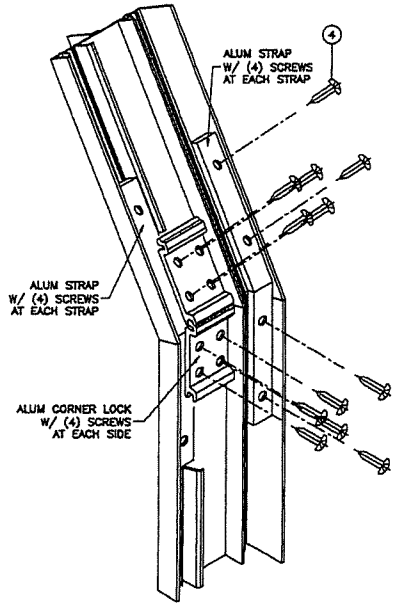

CIRCULAR WINDOWS

TYPICAL CORNER DETAILS

Engr: DR. HUMAYOUN FAROOQ
STRUCTURES
FLA. PE # 16557
C.A.N. 3538

APR 0 9 2008

PRODUCT REVISED
as complying with the Florida
Building Code
Acceptance No. 08-0412.06
Expiration Date NOV. 6, 2013
By [signature]
Miami Dade Product Control
Division

AL-FAROOQ CORPORATION
ENGINEERS & PRODUCT DEVELOPMENT
1235 S.W. 87 AVE
MIAMI, FLORIDA 33174
TEL. (305) 264-8100 FAX. (305) 262-6978
COMP-ANL\W03-57ESW

SERIES-1500 ALUMINUM FIXED WINDOW (L.M.I.)

E.S. WINDOWS
5220 N.W. 72 AVE. BAY #4
MIAMI, FL. 33166
TEL. (305) 640-9857 FAX. (305) 593-2074

revisions:

no	date	by	description
C	11.16.04		ELAPES ADDED
D	03.26.06		NO CHANGE THIS SHEET

date: 07-31-03
scale: 1/2" = 1'
dg by: HAMID
chk. by:

drawing no.
W03-57
sheet 7 of 7

R W B C

R W Building Consultants, Inc.

Consulting and Engineering Services for the Building Industry

P.O. Box 230 Valrico, FL 33595 Phone 813.659.9197 Facsimile 813.754.9989

Florida Board of Professional Engineers Certificate of Authorization No. 9813

Product Evaluation Report

Report No.:	FL-12061.5
Date:	January 22, 2009
Product Category:	Exterior Doors
Product sub-category:	Swinging Exterior Door Assemblies
Product Name:	Glazed Fiberglass Double Door With Sidelites Outswing "Impact"
Manufacturer:	Plastpro inc. / Nan Ya Plastics Corp 9 Peach Tree Hill Road Livingston, NJ 07039 Phone 440.969.9773

Scope: This is a Product Evaluation report issued by R W Building Consultants, Inc. and Lyndon F. Schmidt, P.E. (System ID # 1998) for Plastpro inc. / Nan Ya Plastics Corp based on Rule Chapter No. 9B-72.070, Method 1d of the State of Florida Product Approval, Department of Community Affairs-Florida Building Commission.

RW Building Consultants and Lyndon F. Schmidt, P.E. do not have nor will acquire financial interest in the company manufacturing or distributing the product or in any other entity involved in the approval process of the product named herein.

This product has been evaluated for use in locations adhering to the Florida Building Code (2007 Edition)

See Drawing No. FL-12061.5 prepared by R W Building Consultants, Inc. and signed and sealed by Lyndon F. Schmidt, P.E. (FL # 43409) for specific use parameters.

Lyndon F. Schmidt, P.E.
FL No. 43409
January 22, 2009

Limitations

1. This product has been evaluated and is in compliance with the 2007 Florida Building Code structural requirements including the "High Velocity Hurricane Zone" (HVHZ).
2. Product anchors shall be as listed and spaced as shown on details. Anchor embedment to base material shall be beyond wall dressing or stucco.
3. When used in the "HVHZ" this product complies with section 1626 of the 2007 Florida Building Code and does not require an impact resistant covering.
4. For 2x stud framing construction, anchoring of these units shall be the same as that shown for 2x buck masonry construction.
5. Site conditions that deviate from the details of drawing FL-12061.5 require further engineering analysis by a licensed engineer or registered architect.
6. Outswing configurations meet water infiltration requirements for "HVHZ".
7. See drawing FL-12061.5 for size and design pressure limitations.

Lyndon F. Schmidt, P.E.
FL No. 43409
January 22, 2009

Supporting Documents

A Drawing

1. Drawing No. FL-12061.5 prepared by R W Building Consultants, Inc. (Florida Board of Professional Engineers Certificate of Authorization No. 9813), signed and sealed by Lyndon F. Schmidt, P.E.

B Tests

1. Materials (Solutia Interlayer) approval number NOA #08-0206.01 issued by Miami-Dade County BCCO.
2. Materials (Polyurethane foam core) testing per ASTM E84-05 as performed by ETC Laboratories, Inc. and reported in test report ETC 06-255-17412.0, signed by Joseph L. Doldan, P.E. ASTM E84-05 is equivalent to ASTM E84-04 and meets the intent of the 2007 Florida Building Code.
3. Testing per TAS 201-94, 202-94 & TAS 203-94 as performed by Testing Evaluation Laboratories, Inc. and reported in test report TEL 07-01030198 Wendell W. Haney, P.E.
4. Testing (Plastpro/Nan Ya fiberglass door skin) per ASTM G26-95, ASTM D2843-99, ASTM D635-98, ASTM D1929-96(2001) and ASTM D638-03 as performed by ETC Laboratories and reported in test report number ETC-05-255-16776.0, signed by Joseph L. Doldan, P.E. ASTM G155-04 is referenced in the Florida Building Code; ASTM G26-95 Method A is equivalent to ASTM G155-04 Cycle 1 and meets the intent and purpose of the Florida Building Code as attested to in evaluation report FL7241-G26 prepared, signed and sealed by Lyndon F. Schmidt, P.E. Additionally, the Florida Building Code references ASTM D2565-00; the test conditions as reported in ETC-05-255-16776.0 and the calculation of the property retention index (PRI) meet the requirements of ASTM D2565-00 as attested to in evaluation report FL7241-G26 prepared, signed and sealed by Lyndon F. Schmidt, P.E. Additionally, ASTM D635-98 is equivalent to ASTM D635-03 and meets the intent of the 2007 Florida Building Code.
5. Testing (Plastpro/Nan Ya poly fiber door jamb) per ASTM D2843-99, ASTM D635-98 and ASTM D1929-96(2001) and ASTM D638-03 as performed by ETC Laboratories and reported in test report number ETC-07-209-19303.0, signed by Ben Meunier and test report number ETC-08-209-20609.0, signed by Gurjinder Dhami.

C Calculations

1. Product anchor analysis for loading conditions prepared, signed and sealed by Lyndon F. Schmidt, P.E.
2. Buck anchor analysis for loading conditions prepared, signed and sealed by Lyndon F. Schmidt, P.E.
3. Glass Load Resistance Report ASTM E1300 prepared by Lyndon F. Schmidt, P.E.

D Other

1. Certificate of Participation issued by National Accreditation and Management Institute, certifying that Plastpro inc. / Nan Ya Plastics Corp is manufacturing products within a quality assurance program that complies with ISO/IEC 17020 and Guide 53.

Lyndon F. Schmidt, P.E.
FL No. 43409
January 22, 2009

NAN YA PLASTICS CORP.
PLASTPRO INC.

9 PEACH TREE HILL ROAD
LIVINGSTON, NEW JERSEY 07039

GLAZED FIBERGLASS DOUBLE DOOR WITH SIDELITES OUTSWING

IMPACT

GENERAL NOTES

1. This product has been evaluated and is in compliance with the 2007 Florida Building Code structural requirements including the "High Velocity Hurricane Zone" (HVHZ).
2. Product anchors shall be as listed and spaced as shown on details. Anchor embedment to base material shall be beyond wall dressing or stucco.
3. When used in the "HVHZ" this product complies with section 1626 of the Florida Building Code and does not require an impact resistant covering.
4. For 2x stud framing construction, anchoring of these units shall be the same as that shown for 2x buck masonry construction.
5. Site conditions that deviate from the details of this drawing require further engineering analysis by a licensed engineer or registered architect.
6. Outswing configurations meet water infiltration requirements for "HVHZ".

TABLE OF CONTENTS

SHEET #	DESCRIPTION
1	TYPICAL ELEVATION, DESIGN PRESSURES & GENERAL NOTES
2	PANEL DETAILS, COMPONENTS & GLAZING DETAIL
3	HORIZONTAL CROSS SECTIONS
4	VERTICAL CROSS SECTIONS
5	VERTICAL CROSS SECTIONS
6	BUCK ANCHORING
7	FRAME ANCHORING
8	ASTRAGAL DETAILS
9	BILL OF MATERIALS & COMPONENTS

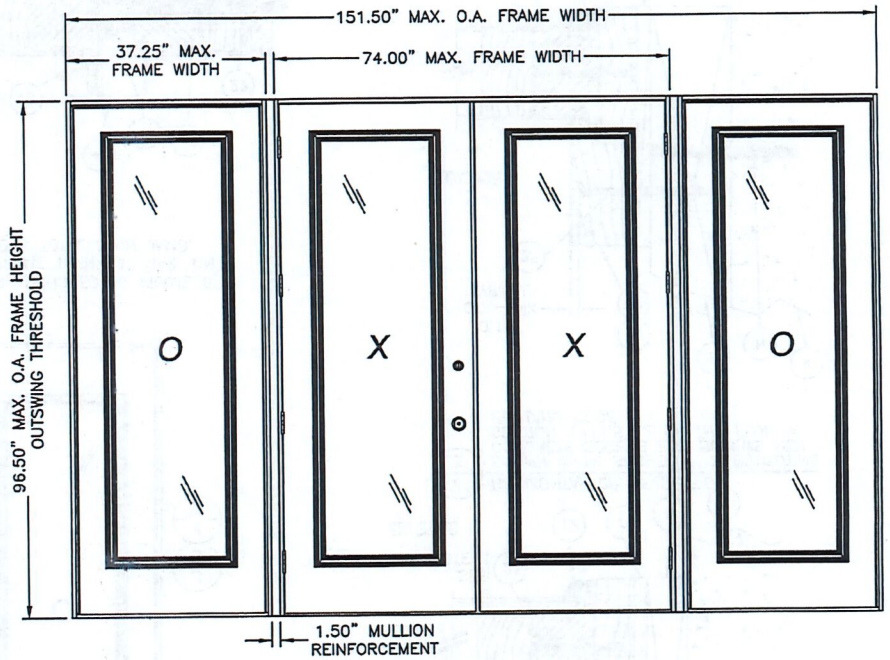

GLAZED DOUBLE DOOR
W/SIDELITES

SWING	MAX. O.A. FRAME DIMENSION	GLASS TYPE	DESIGN PRESSURE (PSF)	
			POSITIVE	NEGATIVE
OUTSWING	151.50" X 96.50"	G1	+50.0	-50.0

Documents Prepared By:
RW BUILDING CONSULTANTS, INC.
P.O. Box 230 Valrico FL. 33595
Phone No.: 813.659.9197
Florida Board of Professional Engineers
Certificate Of Authorization No. 9813
LF S 122-09
Lyndon F. Schmidt, P.E. No. 43409

PRODUCT: PLASTPRO / NAN YA FIBERGLASS DOOR

PART OR ASSEMBLY: TYPICAL ELEVATION, DESIGN PRESSURES & GENERAL NOTES

NO.	DATE	REVISIONS	BY

DATE: 1/22/09
SCALE: N.T.S.
DWG. BY: AL
CHK. BY: LFS
DRAWING NO.: FL-12061.5
SHEET 1 OF 9

© 2009 R.W. BUILDING CONSULTANTS INC.

R:\A - Projects\Project Folders\Proj 1201-1300\pf 1262\D. RWBC Drawings\FL-12061\FL-12061.1-5.dwg, FL-12061.5

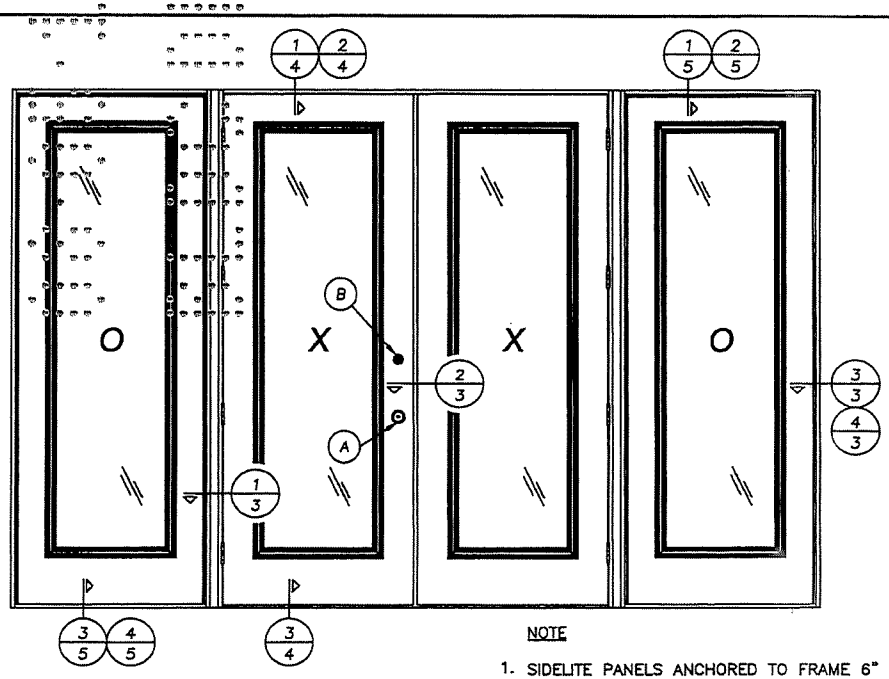

NOTE

1. SIDELITE PANELS ANCHORED TO FRAME 6" FROM TOP OF FRAME THEN 14" MAX. ON CENTER, 8 SCREWS TOTAL EACH JAMB.

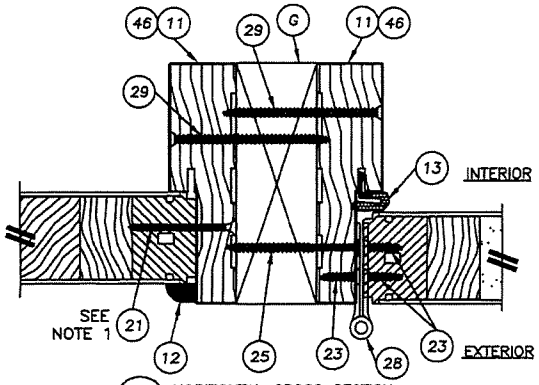

1/3 HORIZONTAL CROSS SECTION

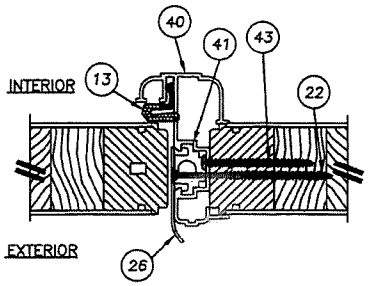

2/3 HORIZONTAL CROSS SECTION

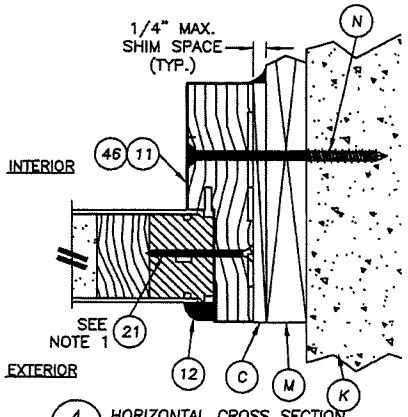

4/3 HORIZONTAL CROSS SECTION

SHOWN W/1X SUB-BUCK SUBSTITUTING CONCRETE SCREWS FOR SCREWS PER SECTION 1714.5.4.2 OF THE FLORIDA BUILDING CODE.

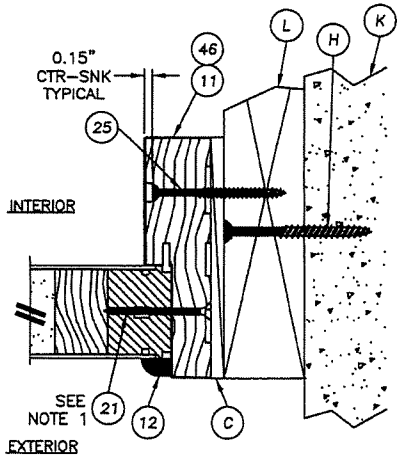

3/3 HORIZONTAL CROSS SECTION

Documents Prepared By:
RW BUILDING CONSULTANTS, INC.
P.O. Box 230 Valrico FL 33595
Phone No.: 813.659.9197
Florida Board of Professional Engineers
Certificate Of Authorization No. 8813
Lyndon F. Schmidt, P.E. No. 43409

PRODUCT: PLASTPRO / NAN YA FIBERGLASS DOOR

PART OR ASSEMBLY: HORIZONTAL CROSS SECTIONS

NO.	DATE	BY

REVISIONS

DATE: 1/22/09
SCALE: N.T.S.
DWG. BY: AL
CHK. BY: LFS
DRAWING NO.: FL-12061.5
SHEET 3 OF 9

© 2009 R.W. BUILDING CONSULTANTS INC.

R:\A - Projects\Project Folders\Proj 1201-1300\of 1262\D. RWBC Drawings\FL-12061\FL-12061.1-.5.dwg, 3OXXO

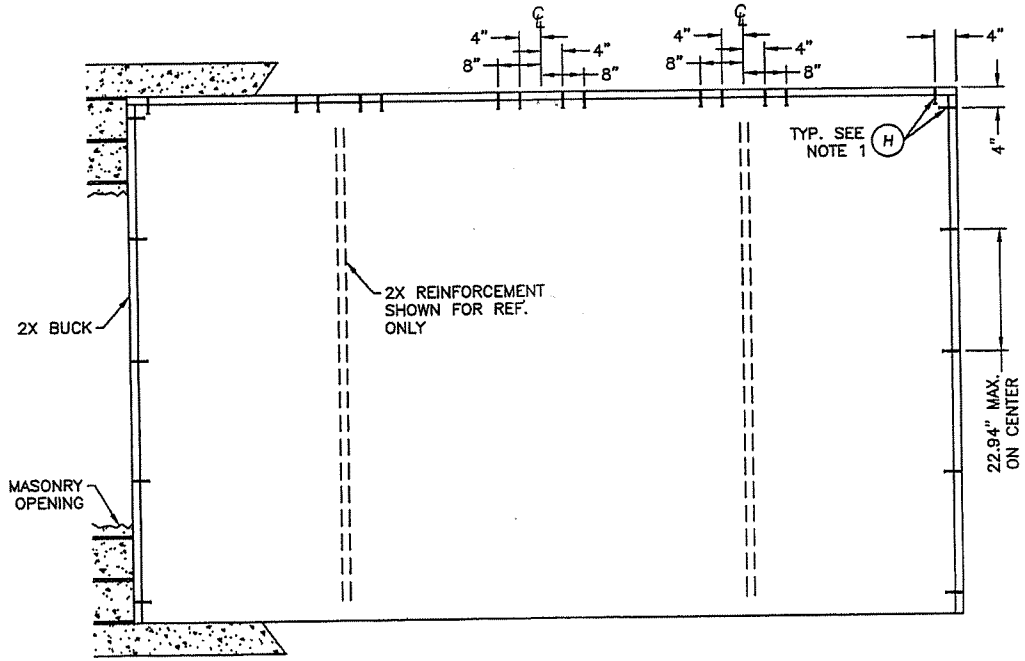

BUCK ANCHORING

NOTES:

1. 1/4" Elco Tapcon anchoring 2x buck require a minimum 1" clearance to masonry edges, a 1-1/4" minimum embedment and a minimum 4" clearance to adjacent tapcons. Substitution of equal concrete screws from a different supplier may have different edge distance and center distance requirements. Tapcon locations at the corners, astragal centerline locations and mullion locations may be adjusted to maintain the minimum edge distance to mortar joints. If Tapcon locations noted as "MAX. ON CENTER" must be adjusted to maintain the minimum edge distance to mortar joints, additional Tapcons may be required to ensure the maximum on center dimension is not exceeded.

Documents Prepared By:
RW BUILDING CONSULTANTS, INC.
P.O. Box 230 Valrico FL 33595
Phone No.: 813.659.9197
Florida Board of Professional Engineers
Certificate Of Authorization No. 9813
CA-C 12.07
Lyndon F. Schmidt, P.E. No. 43409

PRODUCT: PLASTPRO / NAN YA FIBERGLASS DOOR

PART OR ASSEMBLY: BUCK ANCHORING

NO.	DATE	BY

REVISIONS

DATE: 1/22/09
SCALE: N.T.S.
DWG. BY: AL
CHK. BY: LFS
DRAWING NO.: FL-12061.5
SHEET 6 OF 9

© 2009 R.W. BUILDING CONSULTANTS INC.

R:\A - Projects\Project Folders\Proj 1201-1300\pf 1262\D. RWBC Drawings\FL-12061\FL-12061.1-.5.dwg, 6OXXO

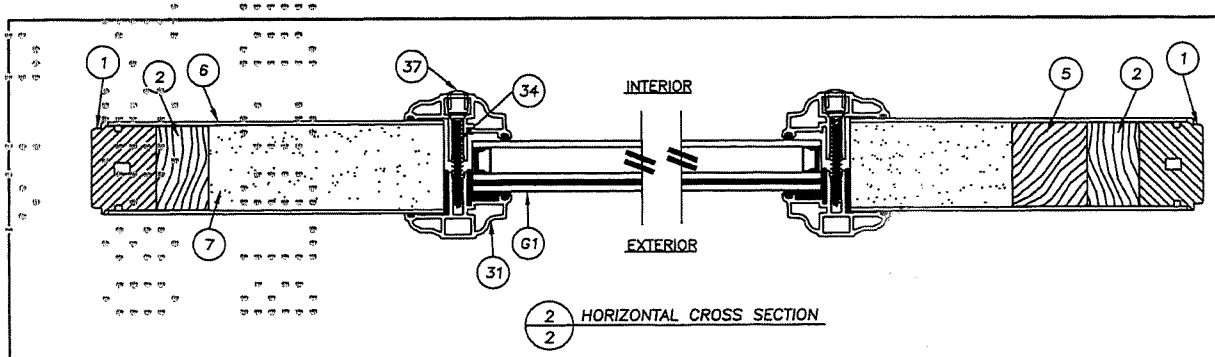

2/2 HORIZONTAL CROSS SECTION

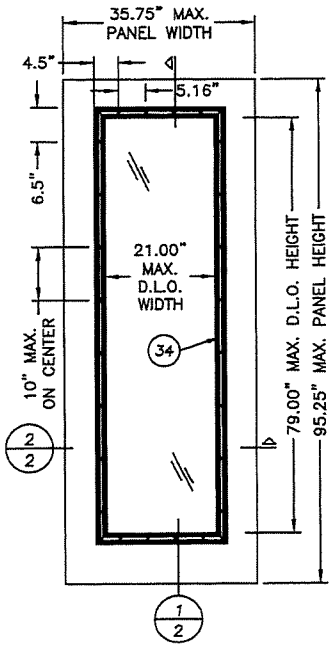

2/2 1/2 DOOR PANEL

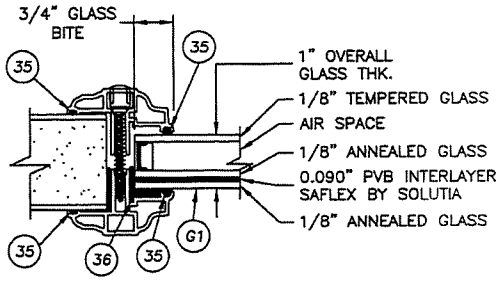

G1 GLAZING DETAIL

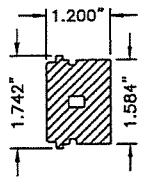

1 HINGE & LATCH STILE EDGE

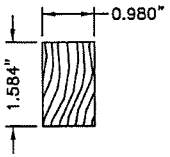

2 HINGE & LATCH STILE REINFORCEMENT

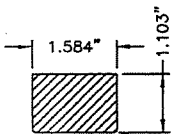

3 TOP RAIL

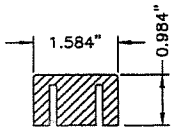

4 BOTTOM RAIL

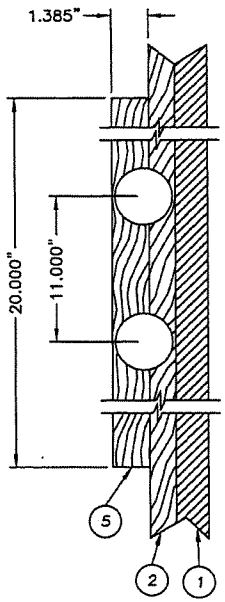

1 2 5 LOCK BLOCK DETAIL

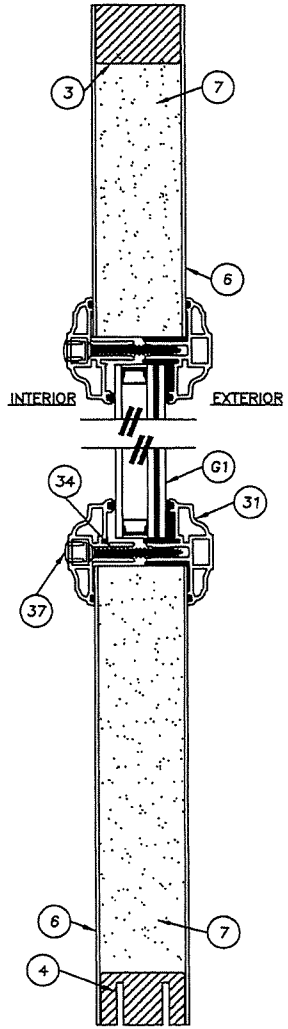

1/2 VERTICAL CROSS SECTION

Documents Prepared By:
RW BUILDING CONSULTANTS, INC.
P.O. Box 230 Valrico FL 33595
Phone No.: 813.659.9197
Florida Board of Professional Engineers
Certificate of Authorization No. 9813
Lyndon F. Schmidt, P.E. No. 43406

PRODUCT: PLASTPRO / NAN YA FIBERGLASS DOOR

PART OR ASSEMBLY: PANEL DETAILS, COMPONENTS & GLAZING DETAIL

NO.	DATE	REVISIONS	BY

DATE: 1/22/09
SCALE: N.T.S.
DWG. BY: AL
CHK. BY: LFS
DRAWING NO.: FL-12061.5
SHEET 2 OF 9

© 2009 R.W. BUILDING CONSULTANTS INC.

R:\A - Projects\Project Folders\Proj 1201-1300\pf 1262\D. RWBC Drawings\FL-12061\FL-12061.1-5.dwg, 20XXO

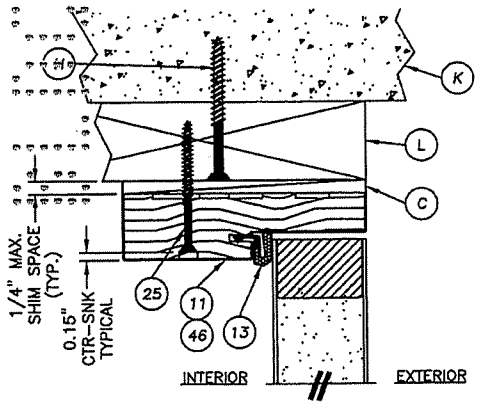

1/4 VERTICAL CROSS SECTION

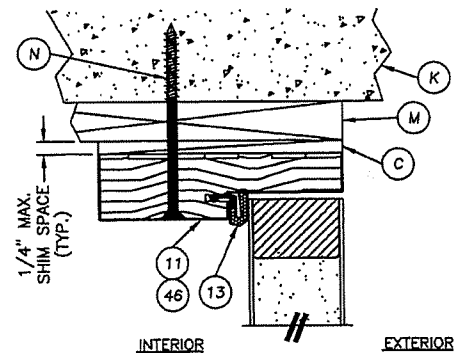

2/4 VERTICAL CROSS SECTION

SHOWN W/1X SUB-BUCK SUBSTITUTING CONCRETE SCREWS FOR SCREWS PER SECTION 1714.5.4.2 OF THE FLORIDA BUILDING CODE.

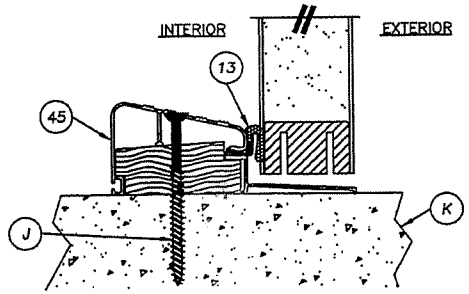

3/4 VERTICAL CROSS SECTION

Documents Prepared By:
R.W. BUILDING CONSULTANTS, INC.
P.O. Box 230 Valrico FL. 33595
Phone No.: 813.659.9197
Florida Board of Professional Engineers
Certificate Of Authorization No. 9513
LFS 1/22/09
Lyndon F. Schmidt, P.E. No. 43409

PRODUCT: PLASTPRO / NAN YA FIBERGLASS DOOR

PART OR ASSEMBLY: VERTICAL CROSS SECTIONS

NO.	DATE	REVISIONS	BY

DATE: 1/22/09
SCALE: N.T.S.
DWG. BY: AL
CHK. BY: LFS
DRAWING NO.: FL-12061.5
SHEET 4 OF 9

© 2009 R.W. BUILDING CONSULTANTS INC.

R:\A - Projects\Project Folders\Proj 1201-1300\of 1262\D. RWBC Drawings\FL-12061\FL-12061.1-5.dwg, 40XXO

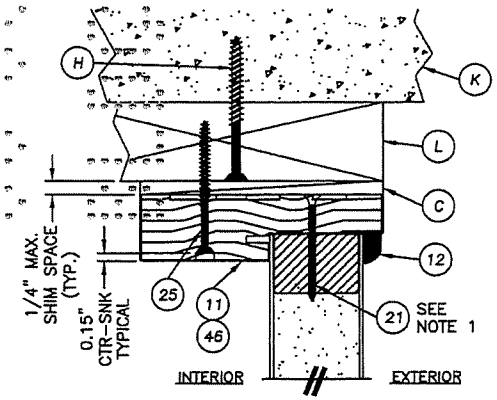

1/5 VERTICAL CROSS SECTION

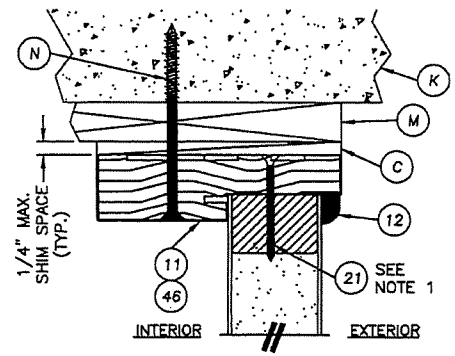

2/5 VERTICAL CROSS SECTION
SHOWN W/1X SUB-BUCK SUBSTITUTING CONCRETE SCREWS FOR SCREWS PER SECTION 1714.5.4.2 OF THE FLORIDA BUILDING CODE.

NOTE
1. SCREWS THRU FRAME & THRESHOLD INTO SIDELITE PANEL LOCATED 3" & 13-1/2" FROM EACH CORNER OF SIDELITE FRAME.

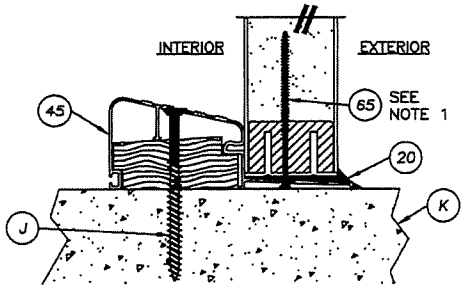

3/5 VERTICAL CROSS SECTION

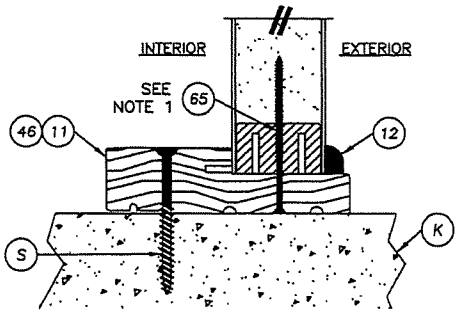

4/5 VERTICAL CROSS SECTION
FRAME OUTSWING ONLY

Documents Prepared By:
RW BUILDING CONSULTANTS, INC.
P.O. Box 230 Valrico FL 33595
Phone No.: 813.659.9197
Florida Board of Professional Engineers
Certificate Of Authorization No. 9813
CFDC 1.22.09
Lyndon F. Schmidt, P.E. No. 43409

PRODUCT: PLASTPRO / NAN YA FIBERGLASS DOOR

PART OR ASSEMBLY: VERTICAL CROSS SECTIONS

NO.	DATE	REVISIONS	BY

DATE: 1/22/09
SCALE: N.T.S.
DWG. BY: AL
CHK. BY: LFS
DRAWING NO.: FL-12061.5
SHEET 5 OF 9

© 2009 R.W. BUILDING CONSULTANTS INC.

R:\A - Projects\Project Folders\Proj 1201-1300\pf 1262\D. RWBC Drawings\FL-12061\FL-12061.1-.5.dwg, 5OXXO

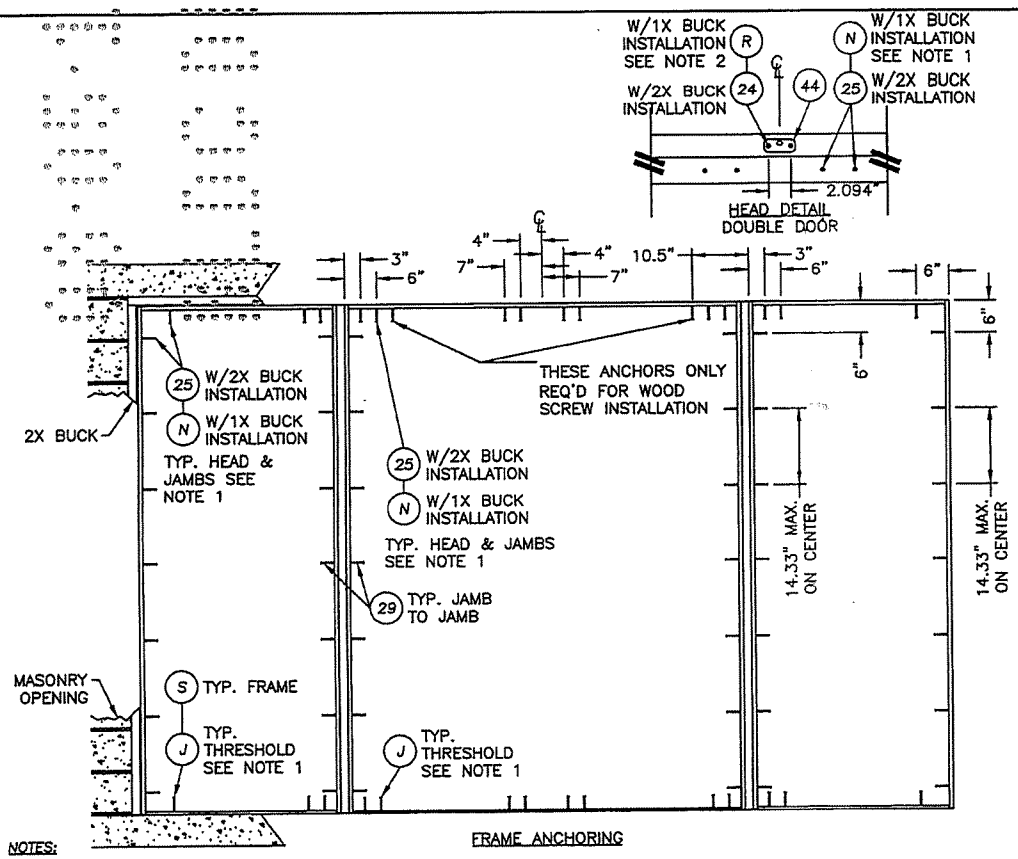

FRAME ANCHORING

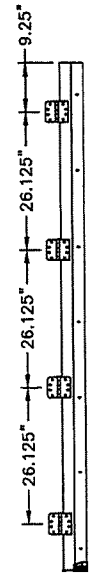

HINGE LOCATIONS

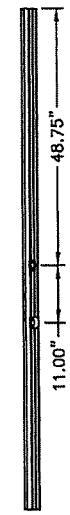

LATCH & DEADBOLT LOCATIONS – ASTRAGAL

NOTES:

1. 1/4" ITW concrete screws anchoring frame and/or sill require a minimum 2–1/2" clearance to masonry edges, a 1–1/4" minimum embedment and a minimum 3" clearance to adjacent concrete screws. Substitution of equal concrete screws from a different supplier may have different edge distance and center distance requirements. Tapcon locations at the corners, astragal centerline locations and mullion locations may be adjusted to maintain the minimum edge distance to mortar joints. If Tapcon locations noted as "MAX. ON CENTER" must be adjusted to maintain the minimum edge distance to mortar joints, additional Tapcons may be required to ensure the maximum on center dimension is not exceeded.

2. 3/16" ITW concrete screws anchoring frame and/or sill require a minimum 2–5/8" clearance to masonry edges, a 1–1/4" minimum embedment and a minimum 2–1/2" clearance to adjacent concrete screws. Substitution of equal concrete screws from a different supplier may have different edge distance and center distance requirements.

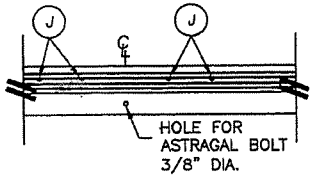

THRESHOLD DETAIL DOUBLE DOOR

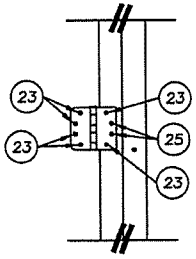

HINGE DETAIL

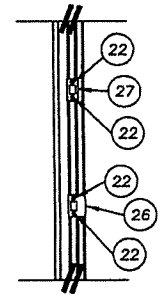

STRIKE PLATE DETAIL

Documents Prepared By:
RW BUILDING CONSULTANTS, INC.
P.O. Box 230 Valrico FL 33595
Phone No.: 813.659.9187
Florida Board of Professional Engineers
Certificate Of Authorization No. 9813
Lyndon F. Schmidt, P.E. No. 43409

PRODUCT: PLASTPRO / MAN YA FIBERGLASS DOOR

PART OR ASSEMBLY: FRAME ANCHORING

NO.	DATE	BY

REVISIONS

DATE: 1/22/09
SCALE: N.T.S.
DWG. BY: AL
CHK. BY: LFS
DRAWING NO.: FL-12061.5
SHEET 7 OF 9

© 2009 R.W. BUILDING CONSULTANTS INC.

R:\A - Projects\Project Folders\Proj 1201-1300\of 1262\D. RWBC Drawings\FL-12061\FL-12061.1-.5.dwg, 70XXO

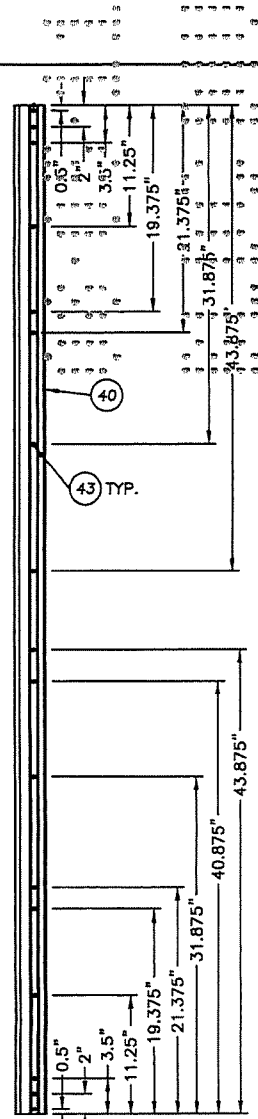

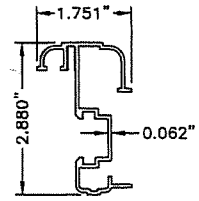

40 ASTRAGAL (DLP)

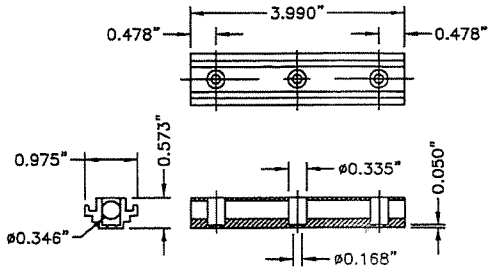

41 CONCEALED STIFFENER (DLP)

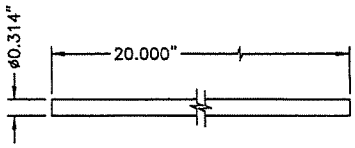

42 SLIDE BOLT ROD (DLP)
TYP. TOP & BOTTOM OF ASTRAGAL
TOP THROUGH 1.975"
BOTTOM THROUGH 1.975"

Documents Prepared By:
RW BUILDING CONSULTANTS, INC.
P.O. Box 230 Valrico FL 33595
Phone No.: 813.659.9197
Florida Board of Professional Engineers
Certificate Of Authorization No. 9813
LFS 1/22/09
Lyndon F. Schmidt, P.E. No. 43409

PRODUCT: PLASTPRO / NAN YA FIBERGLASS DOOR

PART OR ASSEMBLY: ASTRAGAL DETAILS

NO	DATE	REVISIONS	BY

DATE: 1/22/09
SCALE: N.T.S.
DWG. BY: AL
CHK. BY: LFS
DRAWING NO.: FL-12061.5
SHEET 8 OF 9

© 2009 R.W. BUILDING CONSULTANTS INC.

R:\A - Projects\Project Folders\Proj 1201-1300\pf 1262\D. RWBC Drawings\FL-12061\FL-12061.1-.5.dwg, 8OXO

BILL OF MATERIALS

ITEM	DESCRIPTION	MATERIAL
A	SCHLAGE GRADE 2 (P5515-052) KEYED LOCKSET	STEEL
	YALE 100C-PASSAGE KEYED LOCKSET	STEEL
B	SCHLAGE GRADE 2 (P5515-089) MAXIMUM SECURITY DEADBOLT	STEEL
	YALE 820.SGL.CYL. DEADBOLT	STEEL
C	1/4" MAX. SHIM STACK	WOOD
G	2X MULLION REINFORCEMENT (CLEAR PINE)	WOOD
H	1/4" X 2-3/4" ELCO TAPCON	STEEL
J	1/4" X 3-1/4" ITW TAPCON	STEEL
K	MASONRY	CONCRETE
L	2X BUCK	WOOD
M	1X BUCK	WOOD
N	1/4" X 3-3/4" ITW TAPCON	STEEL
R	3/16" X 3-1/4" ITW TAPCON	STEEL
S	1/4" X 2-3/4" ITW TAPCON	STEEL
1	HINGE & LATCH STILE EDGE	COMPOSITE
2	HINGE & LATCH STILE REINFORCEMENT	WOOD
3	TOP RAIL	COMPOSITE
4	BOTTOM RAIL	COMPOSITE
5	LOCK BLOCK	WOOD
6	DOOR SKIN (0.069" THK.) PLAST PRO/NANYA Fy= 11,063 PSI	FIBERGLASS
7	FOAM CORE	POLYURETHANE
11	JAMB FINGER-JOINT-PINE SG = .42 OR BETTER	WOOD
12	TRIM	–
13	WEATHERSTRIP	FOAM
20	SEALANT	SILICONE
21	#7 X 2" PFH DRYWALL SCREW	STEEL
22	#8 X 3" PFH WOOD SCREW	STEEL
23	#10 X 3/4" PFH SCREW	STEEL
24	#10 X 2-1/2" PFH SMS	STEEL
25	#10 X 2-1/2" PFH WOOD SCREW	STEEL
26	LATCH STRIKE PLATE	STEEL
27	DEADBOLT STRIKE PLATE	STEEL
28	4" HINGE	STEEL
29	#10 X 3" PFH SCREW	STEEL
31	ODL LITE FRAME	ALUMINUM
34	#10 X 1-3/4" PFH SCREW	STEEL
35	GLAZING COMPOUND REDI-SEAL BY ODL, POLYMERIC FOAM	P/MERIC FOAM
36	STRUCTURAL SILICONE DOW #995	SILICONE
37	SCREW PLUG	–
40	ASTRAGAL 6063-T5 ALUMINUM BY DLP	ALUMINUM
41	CONCEALED STIFFENER 6063-T6 ALUMINUM BY DLP	ALUMINUM
42	SLIDE BOLT ROD	STEEL
43	#8 X 2" PPH SCREW	STEEL
44	ASTRAGAL STRIKE PLATE @ HEAD	STEEL
45	OUTSWING THRESHOLD BY DLP	ALUM./WOOD
46	POLY FIBER JAMB (PLASTPRO / NAN YA)	POLY FIBER
65	#6 X 3" PFH WOOD SCREW	STEEL

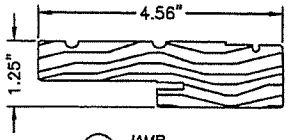

11 JAMB

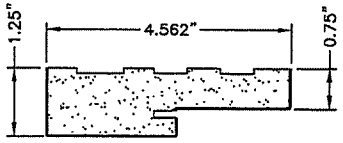

46 POLY FIBER JAMB

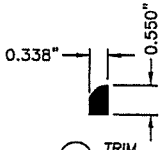

12 TRIM

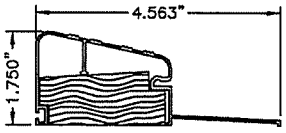

45 OUTSWING THRESHOLD

Documents Prepared By:
RW BUILDING CONSULTANTS, INC.
P.O. Box 230 Valrico FL 33595
Phone No.: 813.659.9197
Florida Board of Professional Engineers
Certificate Of Authorization No. 9513
Lyndon F. Schmidt, P.E. No. 43409

PRODUCT: PLASTPRO / NAN YA FIBERGLASS DOOR

PART OR ASSEMBLY: BILL OF MATERIALS & COMPONENTS

NO.	DATE	REVISIONS	BY

DATE: 1/22/09
SCALE: N.T.S.
DWG. BY: AL
CHK. BY: LFS
DRAWING NO.: FL-12061.5
SHEET 9 OF 9

© 2009 R.W. BUILDING CONSULTANTS INC.

R:\A - Projects\Project Folders\Proj 1201-1300\pf 1262\D. RWBC Drawings\FL-12061\FL-12061.1-.5.dwg, 90XXO

BLD-2011-0657
4401 SW 79 Ave

RUSH

OFFICE COPY

2007 FLORIDA BUILDING CODE
EFFECTIVE 3/01/2009

3/12/11 Back in office w/ New Sheets Paginated } HB

VILLAGE OF PALMETTO BAY

THIS COPY OF PLAN MUST BE AVAILABLE ON BUILDING SITE OR NO INSPECTION WILL BE GIVEN

	APPROVED		DISAPPROVED	
SECTION	BY	DATE	BY	DATE
ZONING				
LANDSCAPING				
PUBLIC WORKS				
BUILDING	AR	8/12/11	AR	8/9/11
UTILITIES				
HANDICAP				
STRUCTURAL				
ELECTRICAL				
PLUMBING				
MECHANICAL				
ENERGY				
FIRE				
BUILDING OFFICIAL				

Subject to compliance with all federal, state, and local [illegible] and regulations. The village of Palmetto Bay [illegible] ity for accuracy of all [illegible] of these plans.
NOTICE: In addition to the requirements of this [illegible] be additional restrictions applicable to this or the [illegible] county and village.