To: Honorable Mayor and Village Council

Date: August 30, 2013

From: Ron E. Williams, Village Manager

Re: Recommendation for Approval Award of Bid No. 2013-PR-005

A RESOLUTION OF THE MAYOR AND VILLAGE COUNCIL OF THE VILLAGE OF PALMETTO BAY, FLORIDA, RELATING TO PARKS AND RECREATION; APPROVING THE VILLAGE MANAGER'S RECOMMENDATION OF FAST-DRY COURTS, INC., AS THE MOST RESPONSIVE BIDDER IN PROVIDING SPECIFIED SERVICES FOR THE CORAL REEF PARK TENNIS/RACQUETBALL COURT RESURFACING PROJECT; AND, FURTHER AUTHORIZING THE VILLAGE MANAGER TO EXECUTE THE CONTRACT FOR SERVICES UNDER BID-2013-PR-005 FAST-DRY COURTS, INC., FOR THE CORAL REEF PARK TENNIS/RACQUETBALL COURT RESURFACING PROJECT AT A COST OF $36,390.00; AND PROVIDING AN EFFECTIVE DATE.

BACKGROUND AND ANALYSIS:
Given the gradual deterioration of the Coral Reef Park tennis and racquetball courts, the resurfacing of these courts was approved as part of the Parks and Recreation Capital Improvement Program for FY 2012-13. Pursuant to receipt of bids received in response to the Invitation to Bid No. 2013-PR-005 'Coral Reef Park Tennis/Racquetball Court Resurfacing Project', an analysis was conducted by an evaluation committee as appointed by the Village Manager.

Fast-Dry Courts, Inc. met all requirements specified in the Invitation to Bid No. 2013-PR-005; and was the second lowest bidder at a cost of $36,390. The lowest bidder, Sports Surfaces LLC (formerly Accurate Tennis), was deemed non-responsive due to 1) an incomplete bid submittal (no identification as to licenses, organizational chart and list of key personnel); and 2) the previous work for the Village in resurfacing the Palmetto Bay Park's Skate park; which required resurfacing by another company to remedy issues. The evaluation committee unanimously concluded that Fast-Dry Courts, Inc. be recommended for the Manager's consideration in presenting an award of bid to the Village Council.

FISCAL IMPACT: Funding available as authorized in the FY 2012-2013 Annual Budget.

RECOMMENDATION: Approval.

RESOLUTION NO. _____

A RESOLUTION OF THE MAYOR AND VILLAGE COUNCIL OF THE VILLAGE OF PALMETTO BAY, FLORIDA, RELATING TO PARKS AND RECREATION; APPROVING THE VILLAGE MANAGER'S RECOMMENDATION OF FAST-DRY COURTS, INC., AS THE MOST RESPONSIVE BIDDER IN PROVIDING SPECIFIED SERVICES FOR THE CORAL REEF PARK TENNIS/RACQUETBALL COURT RESURFACING PROJECT; AND, FURTHER AUTHORIZING THE VILLAGE MANAGER TO EXECUTE THE CONTRACT FOR SERVICES UNDER BID-2013-PR-005 WITH FAST-DRY COURTS, INC., FOR THE CORAL REEF PARK TENNIS/RACQUETBALL COURT RESURFACING PROJECT AT A COST OF $36,390.00; PROVIDING AN EFFECTIVE DATE.

WHEREAS, in an effort to restore operational efficiency of the tennis and racquetball courts at Coral Reef Park and pursuant to the competitive bidding process, the Village issued Invitation to Bid No. 2013-PR-005; and,

WHEREAS, following an analysis of all bids received by an evaluation committee as appointed by the Village Manager, Fast-Dry Courts, Inc. met all bid requirements and was unanimously recommended as the most responsive bidder with a bid price of $36,390.00; and,

WHEREAS, capital dollars necessary for this expenditure have been identified and approved in the Village's FY 2012-2013 Annual Capital Improvement Budget; and,

WHEREAS, the Mayor and Council are now being presented with the Village Manager's recommendation for approval of award and authorization to enter into a contract with Fast-Dry Courts, Inc. for specified services pursuant to the terms and conditions of the Invitation to Bid 2013-PR-005 at the lowest responsive bid price of $36,390.00.

NOW, THEREFORE, BE IT RESOLVED BY THE MAYOR AND VILLAGE COUNCIL OF THE VILLAGE OF PALMETTO BAY, FLORIDA, AS FOLLOWS:

Section 1. The Village Council hereby approves the recommendation of the Village Manager in recommending Fast-Dry Courts, Inc. as the most responsive bidder pursuant to Invitation to Bid No. 2013-PR-005 at a cost of $36,390.00.

Section 2. The Village Manager is hereby authorized to enter into agreement with Fast-Dry Courts, Inc., pursuant to agreed-upon terms and conditions regarding specified tennis/racquetball court resurfacing services at Coral Reef Park; at a cost of $36,390.00; and as provided under the attached contract to this Resolution, identified as Exhibit 1.

Section 3. This resolution shall take effect immediately upon adoption.

PASSED AND ADOPTED this _____ day of September, 2013.

Attest: _____ _____

Meighan J. Alexander
Village Clerk

Shelley Stanczyk
Mayor

APPROVED AS TO FORM:

_____

Eve A. Boutsis
Village Attorney

FINAL VOTE AT ADOPTION:

Council Member Patrick Fiore _____

Council Member Tim Schaffer _____

Council Member Joan Lindsay _____

Vice-Mayor John Dubois _____

Mayor Shelley Stanczyk _____

CONSTRUCTION AGREEMENT BETWEEN THE VILLAGE OF PALMETTO BAY AND FAST-DRY COURTS, INC.

THIS AGREEMENT is executed and entered into on this _____ day of _____, 2013, between the Village of Palmetto Bay, Florida, a Florida municipal corporation, (hereinafter referred to as the "Village") and Fast-Dry Courts Inc., a Florida Corporation, licensed and authorized to do business in the State of Florida, (hereinafter referred to as the "Contractor"), whose place of business is 1400 NW 13th Avenue, Pompano Beach, Florida 33069.

WHEREAS, pursuant to a competitive bid and selection process consistent with section 287.055, Florida Statutes, the Village requested qualifications from qualified contractors and selected the Contractor to provide professional services at Coral Reef Park under Village of Palmetto Bay Bid No. 2013-PR-005; and

WHEREAS, the purpose of this Agreement is to procure specified resurfacing to the Coral Reef Park Tennis/Racquetball Courts for the Village of Palmetto Bay Park as further explained and detailed under Section 4 – Scope of Services and Compensation and Section 9 – Specifications; and

WHEREAS, the project work includes specified cleaning, prepping and resurfacing of the tennis and racquetball courts; installation of internal wind net posts of four courts and application of selected color coats and lines (including blended Quick Start lines) at Coral Reef Park without limitation and per industry standards; and

WHEREAS, the Contractor is willing and able to perform such professional services for the Village within the basic terms and conditions set forth in this agreement ("Agreement"); and

NOW, THEREFORE, in consideration of the sum of $10.00, the mutual terms, conditions, promises, and covenants set forth below, and other good and valuable consideration, the receipt and sufficiency of which are hereby acknowledged, the parties hereby agree as follows:

GENERAL TERMS AND CONDITIONS

SECTION 1. WHEREAS CLAUSES. The above whereas clauses are incorporated and made part of this agreement.

SECTION 2.DEFINITIONS. Wherever used in this Agreement the following terms have the meanings indicated:

Addenda - Written or graphic instruments issued prior to the opening of Bids which modify, interpret, make additions, deletions, clarifications or revisions to the Contract Documents, including as to Drawings and Specifications.

Agreement (Or Contract Document) - The written contract between the Village and the Contractor covering the Work to be performed; when other documents are attached to the Agreement they become part of the contract, and specifically includes all the attachments to this Contract Documents. Cross reference with Contract Document definition below.

Application for Payment - The form furnished by the Architect which is to be used by the Contractor to request progress or final payment and which includes such supporting documentation as is required by the Contract Documents.

Bid - The offer(s) or proposal of the Bidder/Contractor submitted in response to this Invitation for Bid, on the prescribed form setting for the prices for the Work to be performed.

Bonds - Bid, Performance, and Payment Bonds and other instruments which protect against loss due to inability or refusal of the Contractor to perform its Contract.

Change Order - A document recommended by the Architect, which is signed by the Contractor and the Village and authorizes an addition, deletion, or revision in the Work, or an adjustment in the Contract Price or the Contract Time, issued on or after the Effective Date of the Agreement as provided within this agreement under the relevant section.

_____ Village
_____ Contractor

Consultant - The Architect or Engineer of Record.

Contract Documents (Agreement) - The Notice Inviting Bids, Instructions to Bidders, Bid Forms (including the Bid, Bid Schedule(s), Information Required of Bidder, Bid Bond, and all required certificates and affidavits), Agreement, Performance Bond, Payment Bond, General Conditions, Technical Specifications, and all addenda, and change orders executed pursuant to the provisions of the Contract Documents.

Contract Price - The original amount established in the bid submittal and award by the Village, as may be amended by Change Order.

Contract Time - The original time between commencement and completion, including any milestone dates thereof, established in the contract, as may be amended by Change Order.

Contractor: The person, firm or corporation with whom the Village has executed the Agreement.

Day/Calendar Day - A calendar day of 24 hours measured from midnight to the next midnight.

Defective Work - Work that is unsatisfactory, faulty, or deficient; or that does not conform to the Contract Documents; or that does not meet the requirements of any inspection, reference standard, test, or approval referred to in the Contract Documents; or Work that has been damaged prior to the Architect's recommendation of final payment.

Delivery - Unless actual date of delivery is specified (or if specified delivery cannot be met), show the number of calendar days required to make delivery after receipt of purchase order, in space provided. Delivery time may become a basis for making an award. Delivery shall be within the normal working hours of the user, Monday through Friday, excluding holidays.

Anti-Discrimination - The Contractor certifies that he/she is in compliance with the non-discrimination clause contained in Section 202, Executive Order 11246, as amended by Executive Order 11375, relative to equal employment opportunity for all persons without regard to race, color, religion, sex or national origin.

Drawings - The drawings, plans, maps, profiles, diagrams, and other graphic representations which show the character, location, nature, extent, and scope of the Work and which have been prepared by the Architect and are referred to in the Contract Documents. Shop Drawings are not Drawings as so defined.

Effective Date of the Agreement - The date indicated in the Agreement on which it was executed, but if no such date is indicated it means the date on which the Agreement is signed and delivered by the last of the two parties to sign and deliver.

Architect - The Architect or Engineer which prepared the Contract Documents, if applicable; and which acts as the Village's agent in administration of the Contract.

Field Order - A written order which orders minor changes in the work but which does not involve a change in the Contract Price or Contract Time.

Force Majeure - An act of God, including sink holes, hurricanes, tornadoes, landslides, lightning, earthquakes, fire, flood, explosion, sabotage or similar occurrence, acts of a public enemy, war, blockage or insurrection, riot, civil disturbance, or act of terrorism.

Furnish or Supply – To supply and deliver, unload, inspect for damage.

Install – To unpack, assemble, erect, apply, place, finish, cure, protect, clean and ready for use.

_____ Village

_____ Contractor

Laws and Regulations; Laws or Regulations - Laws, rules, regulations, ordinances, codes, and/or orders promulgated by a lawfully constituted body authorized to issue such Laws and Regulations.

Notice of Intent to Award - The written notice by the Village to the apparent successful Bidder (Contractor) stating that upon compliance by the apparent successful bidder with the conditions precedent enumerated therein within the time specified, the Village will execute and deliver the Agreement to him.

Notice to Proceed - The written notice issued by the Village to the Contractor authorizing the Contractor to proceed with the Work and establishing the date of commencement of the Contract Time.

Partial Utilization - Placing a portion of the Work in service for the purpose for which it is intended (or a related purpose) before reaching Substantial Completion of the Work.

Products – Means new material, machinery, components, equipment, fixtures, and systems forming the Work, but does not include machinery and equipment used for preparation, fabrication, conveying and erection of the Work. Products may also include existing materials or components required for reuse.

Project - All matters and things whether completed or partially completed, and includes all other labor, materials, equipment and services provided or to be provided by the Successful Bidder in accordance with the Contract.

Provide – To furnish or supply, plus install.

Resident Project Representative - The authorized representative of the Architect, Engineer or Village Building Official who is assigned to the site or any part thereof.

Shop Drawings - All drawings, diagrams, illustrations, schedules and other data which are specifically prepared by or for the Contractor and submitted by the Contractor to illustrate some portion of Work and all illustrations, brochures, standard schedules, performance charts, instructions, and diagrams to illustrate material or equipment for some portion of the Work.

Specifications - (Same definition as for Technical Specifications hereinafter).

Subcontractor - An individual, firm, or corporation having a direct contract with the Contractor or with any other Subcontractor for the performance of a part of the Work at the site.

Substantial Completion - Refers to the date certified by the Village Building Official, Architect or Engineer to when all conditions and requirements of permits and regulatory agencies have been satisfied, and when the Work has progressed to the point where, in the opinion of the Village Building Official, Architect or Engineer, as evidenced by the Certificate of Substantial Completion/Notice of Completion as applicable, it is sufficiently complete, in accordance with the Contract Documents, so that the Work is available for beneficial occupancy and can be utilized for the purposes for which it is intended; or if there be no such certificate issued when final payment is due in accordance with Section 15, et seq. A Temporary Certificate of Occupancy or Certificate of Occupancy must be issued for Substantial Completion to be achieved, however, the issuance of a Temporary Certificate of Occupancy or Certificate of Occupancy or the date thereof are not to be determinative of the achievement or date of Substantial Completion. The terms "substantially complete" and "substantially completed" can be used interchangeably as applied to any Work refer to as "substantial completion" thereof. At Substantial Completion, a Final Punch List will be prepared and provided to the Contractor. The Final Punch List will contain a listing of all known remaining incomplete items of the Work, but is not to be considered by the Contractor as a waiver by the Village of the Contractor's obligation to complete all the Work in complete compliance with the Contract Documents. If the Project is behind schedule, the Village may direct the Contractor to expedite the Work at no additional cost to the Village by whatever means the Contractor may use, including, without limitation, increasing

_____ Village

_____Contractor

manpower or working overtime to bring the Work back within the currently submitted and approved Progress Schedule.

Supplier - A manufacturer, fabricator, supplier, distributor, material man, or vendor.

Technical Specifications - Those portions of the Contract Documents consisting of this Agreement and written technical descriptions of products and execution of the Work as supplied in the bid documents by the Village.

Underground Utilities - All pipelines, conduits, ducts, cables, wires, manholes, vaults, tanks, tunnels, or other such facilities or attachments, and any encasements containing such facilities which have been installed underground to furnish any of the following services or materials: water, sewage and drainage removal, electricity, gases, steam, liquid petroleum products, telephone or other communications, cable television, traffic, or other control systems.

Village: Village of Palmetto Bay, 9705 East Hibiscus Street, Palmetto Bay, Florida 33157.

Weather Delays - Work stoppage caused by abnormal inclement weather, where abnormal duration and frequency of rain as compared with the Weather Bureau data and supported by project logs, has caused the contractor to suspend critical path activities during the exceptional adverse weather event for more than fifty percent (50%) of the work period of the day due to exceptionally adverse weather. Weather delay claim can be made for work day only. No time extension will be allowed for weekend rains.

Abnormal weather conditions not reasonably anticipated shall mean weather conditions which prevent work on the Project and which have a direct effect on the Contractor's predefined critical work sequence. Contractor's schedule shall take into consideration normal seasonal weather conditions number of precipitation-days per months (as defined by the National Weather Service 30 year average) along with muddy site days directly related to the precipitation days indicated.

Work: Any and all obligations, duties and responsibilities necessary to the successful completion of the assigned to or undertaken by Contractor under the Contract Documents, including all labor, materials, equipment and other incidentals, and the furnishing thereof.

SECTION 3. PRELIMINARY MATTERS

3.1 Delivery Of Bonds/Insurance Certificates. When the Contractor delivers the signed Agreements to the Village, the Contractor shall also deliver to the Village such Bonds and Insurance Policies and Certificates as the Contractor may be required to furnish in accordance with the Contract Documents.

3.2 Copies Of Documents. The Village shall furnish to the Contractor the required number of copies of the Contract Documents specified herein.

3.3 Commencement Of Contract Time; Notice To Proceed. The Contract Time will start to run on the commencement date stated in the Notice to Proceed.

3.4 Starting The Project. The Contractor shall begin to perform the Work within 10 days after the commencement date stated in the Notice to Proceed, or specified dates which supersede the aforementioned required 10 days after commencement date stated in the Notice to Proceed, but no Work shall be done at the site prior to said commencement date.

_____ Village

_____ Contractor

SECTION 4.SCOPE OF SERVICES AND COMPENSATION

4.1 Prices Shall Be Fixed And Firm For Awarded Contract. The prices quoted by the Contractor on the attached executed Bid Form, attached as Exhibit 1 to this agreement shall remain fixed and firm during the term of this contract; provided however, that the Contractor may offer incentive discounts from this fixed price to the Village at any time during the contractual term. The work includes, but may not be limited to, the furnishing of all labor, materials, tools, equipment, machinery and services necessary to complete renovations in accordance with specifications described herein and as requested by the Village, specifically designed for the Coral Reef Park Tennis and Racquetball Court Resurfacing Project; located at 7895 SW 152 Street, Palmetto Bay, Florida 33157; and further detailed under Section 4.0 of the invitation for bid. The scope and compensation are outlined in the attached bid response/project manual under Village of Palmetto Bay Bid No.: 2013-PR-005, for the Coral Reef Park Tennis and Racquetball Resurfacing Project, which are attached as Exhibits 2 and 4.

4.2 Contract Documents: Intent Amending, Reuse

a. The Contract Documents comprise the entire agreement between the Village and the Contractor concerning the Work. The Contract Documents are complementary; what is called for by one is as binding as if called for by all. The Contract Documents will be construed in accordance with the law of the place of the Project.

b. It is the intent of the Contract Documents to describe the Work, functionally complete, to be constructed in accordance with the Contract Documents. Any Work, materials, or equipment that may reasonably be inferred from the Contract Documents as being required to produce the intended result shall be supplied whether or not specifically called for. When words which have a well-known technical or trade meaning are used to describe Work, materials, or equipment such words shall be interpreted in accordance with that meaning. Reference to standard specifications, manuals, or codes of any technical society, organization, or association, or to the Laws or Regulations of any governmental authority, whether such reference be specific or by implication, shall mean the latest standard specification, manual, code, or Laws or Regulations in effect at the time of opening of Bids, except as may be otherwise specifically stated. However, no provision of any referenced standard specification, manual, or code (whether or not specifically incorporated by reference in the Contract Documents) shall be effective to change the duties and responsibilities of the Village, the Contractor, the Architect, the Engineer or any of their Consultants, agents, or employees from those set forth in the Contract Documents.

c. If, during the performance of the Work, the Contractor finds a conflict, error, or discrepancy in the Contract Documents, the Contractor shall so report to the Village, Architect and Engineer in writing at once and before proceeding with the Work affected thereby, shall obtain a written interpretation, clarification, or correction from the Village, Architect and Engineer.

d. Order Of Precedence Of Contract Documents. In resolving conflicts resulting from conflicts, errors, or discrepancies in any of the Contract Documents, the order of precedence shall be as follows:

1. Change orders
2. Addenda
3. Agreement - Contract
4. Contractor's Bid (Bid Form Executed) - Exhibit 1.
5. Technical Specifications Exhibit 2
6 Notice Inviting Bids – Exhibit 3
7. Instructions to Bidders – Exhibit 4
8. Representations and Certifications and other Statements of bidders – Exhibit 5

_____ Village

_____Contractor

e. With reference to the Drawings the order of precedence is as follows:

1. Figures govern over scaled dimensions
2. Detail drawings govern over general drawings
3. Addenda/change order drawings govern over Contract Drawings
4. Contract Drawings govern over standard drawings

f. Amending And Supplementing Contract Documents. The Contract Documents may be amended to provide for additions, deletions, and revisions in the Work or to modify the terms and conditions thereof by a Change Order as provided herein.

g. Reuse Of Documents. Neither the Contractor, nor any Subcontractor or Supplier, nor any other person or organization performing any of the Work under a contract with the Village shall have or acquire any title to or ownership rights in any of the Drawings, Technical Specifications, or other documents used on the Work, and they shall not reuse any of them on the extensions of the Project or any other project without written consent.

4.3 The Contractor shall furnish all labor, materials, equipment, machinery, tools, apparatus, and transportation and perform all of the work shown in Exhibits 1,2 and 4 and shall do everything required by this contract and any other contract documents. The Contractor is familiar with the site and the proposed scope of work.

4.4 The Village shall pay the Contractor for the faithful performance of the contract, in lawful money of the United States, and subject to addition and deductions as provided in the contract documents, as follows:

4.5 Based upon the price reflected in Exhibit 1 submitted to the Village by the Contractor, a copy of said Proposal being part of these contract documents, the aggregate amount of this contract is the lump sum of $36,390.

4.6 The price provided in the bid response should include all deductions for trade discounts and the bid response found at Exhibit 1 should include firm net pricing, per each category. The bid response is required to include both unit price and extended total price, when requested. Prices must be stated in units of quantity specified in the bidding specifications. In case of discrepancy in computing the amount of the bid, the unit price quoted will govern. All prices must be F.O.B. destination, freight prepaid Palmetto Bay, Florida with delivery to the location specified at the time of order. Discounts for prompt payment: Award, if made, will be in accordance with terms and conditions stated herein.

4.7 Taxes. The Village of Palmetto Bay is exempt from all Federal Excise and State taxes. The applicable tax exemption number shall be reflected on any Purchase Order. The Contractor shall pay all sales, consumer, use, and other similar taxes required to be paid by the Contractor in accordance with the Laws and Regulations of the place of the Project which are applicable during the performance of the Work.

4.8 Equipment. All equipment shall be maintained in an efficient and safe operating condition while performing work under the contract. Equipment shall have all proper safety devices required by law, properly maintained and in use at all times. If the equipment does not contain proper safety devices and/or is being operated in an unsafe manner, the Village may direct the Contractor to remove such equipment and/or the operator until the deficiency is corrected to the satisfaction of the Village of Palmetto Bay. The Contractor shall be solely responsible and liable for injury to persons, and/or property damage caused by operation of the equipment. Equipment may be inspected and evaluated by the Village of Palmetto Bay at any time.

4.9 Storage And Mobilization Facility.If necessary, the Contractor must provide an on-site storage area with perimeter chain-link fencing and/or container for temporary storage of equipment, supplies and materials as a part of the renovation/improvement process; to be located in the Coral Reef Park and in an area pre-approved by the Village. No on-site storage area will be provided by the Village.

_____ Village

_____Contractor

4.10 Special Contract Requirements. The Contractor's President or Chief Operating Officer must be available to attend meetings with the Village upon request. In the event of a force majeure, or other incident, the Contractor, must initiate appropriate measures to ensure protection of any work-in-progress prior to final inspections and turn over to the Village. All of the Contractor's employees are required to wear a uniform that identifies the Contractor's company name at all times. No fuels, oils, solvents, or similar materials are to be disposed of in any catch basins. The contractor must closely adhere to local, state, and Federal Environmental Protection Agency requirements, and is responsible for all non-compliance penalties.

4.11 The Village shall not be liable to pay, and shall not pay, charges for extra work, delay charges, or additional work, unless the Village's authorized representative and contract officer, Ron E. Williams, Village Manager, specifically authorizes the extra or additional work, in a written task order before the commencement of the work as provided for under this agreement. The contract officer with the authority to issue change orders is the Village Manager.

4.12 Proration. Should services not be fully rendered or the contract terminated for any reason, payment to Contractor will be prorated based upon actual services rendered.

4.13 Contractor shall procure all necessary permits to complete the services contemplated in Exhibit 1, 2 and 4 combined, and shall ensure that all services comply with state and local laws [Florida Building Code, County Code, and Village Code, as applicable]. Contractor shall be responsible for submitting, revising and obtaining final permit approval for all services provided.

a. Unless otherwise provided in the Conditions of this Agreement or Summary of Work, the Contractor shall obtain all construction permits and licenses from the agencies having jurisdiction, including the furnishing of insurance and bonds if required by such agencies. The Village requires insurance and bonds. The enforcement of such requirements under this Contract shall not be made the basis for claims for additional compensation. The Village shall assist the Contractor, when necessary, in obtaining such permits and licenses. The Village shall pay at cost and directly all governmental permit charges necessary for the completion of the Work, which were applicable at the time of the opening of the underlying successful bid proposal. The Village shall pay at cost all charges of utility owners for connections to the Work. If Contractor fails any regulatory inspections, Contractor shall pay for the re-inspection fees necessary for the completion of the Work.

Contractor shall not commence any work without the appropriate permit. Copy of the respective permits shall be submitted to the Village, Architect and Engineer prior to commencement of work.

b. The Contractor shall pay all license fees and royalties and assume all costs incident to the use in the performance of the Work or the incorporation in the Work of any invention, design, process, product, or device which is the subject of patent rights or copyrights held by others. If a particular invention, design, process, product, or device is specified in the Contract Documents for use in the performance of the Work and if to the actual knowledge of the Village, the Architect or Engineer, its use is subject to patent rights or copyrights calling for the payment of any license fee or royalty to others, the existence of such rights shall be disclosed by the Village in the Contract Documents. The Contractor shall indemnify, defend and hold harmless the Village, the Architect and Engineer, and anyone directly or indirectly employed by either of them from and against all claims, damages, losses, and expenses (including attorneys' fees and court costs) arising out of any infringement of patent rights or copyrights incident to the use in the performance of the Work or resulting from the incorporation in the Work of any invention, design, process, product, or device not specified in the Contract Documents, and shall defend all such claims in connection with any alleged infringement of such rights.

_____ Village

_____ Contractor

4.14 Contractor shall promptly advise the Village of any additional work or modifications in scope of work as provided in this agreement. If the additional work is required due to circumstances beyond Contractor's control (i.e. pre-existing/unknown/unforeseen conditions) then the Village shall evaluate the request pursuant to the provisions of this agreement. However, if the additional work is due to Contractor's failure to contemplate Florida or local law requirements, Contractor shall be responsible for completing any such work without additional compensation.

4.15 The Contractor warrants that the product(s) supplied to the Village shall conform in all respects to the standards set forth in the Occupational Safety and Health Act of 1970, as amended, and the failure to comply with this condition will be considered as a breach of contract. Any fines levied because of inadequacies to comply with these requirements shall be borne solely be the Contractor responsible for same.

4.16 Laws And Regulations. Contractor shall be familiar with and abide by all applicable OSHA standards and regulations, including those pertaining to Lead Based Paint, and all work must be performed using lead safe work practices. The Contractor shall observe and comply with all federal, state, and local laws, ordinances, codes, orders, and regulations which in any manner affect those engaged or employed on the Work, the materials used in the Work, or the conduct of the Work. If any discrepancy or inconsistency should be discovered in this Contract in relation to any such law, ordinance, code, order, or regulation, the Contractor shall report the same in writing to the Village, the Architect and Engineer. The Contractor shall indemnify, defend, and hold harmless the Village, the Architect, and Engineer, and their officers, agents, and employees against all claims or liability arising from violation of any such law, ordinance, code, order, or regulation, whether by Contractor or by its employees or subcontractors. Any particular law or regulation specified or referred to elsewhere in the Contract Documents shall not in any way limit the obligation of the Contractor to comply with all other provisions of federal, state, and local laws and regulations. Where an individual State act on occupational safety and health standards has been approved by Federal authority, then the provisions of said State act shall control.

4.17 Where Contractors are required to enter or go onto Village of Palmetto Bay property to deliver materials or perform work or services as a result of the bid award and Contract, the Contractor will assume the full duty, obligation and expense of obtaining all necessary licenses and insurance and assure all work complies with all applicable Miami-Dade County, Federal, Village of Palmetto Bay Building Code, and industry standards for the specified construction services. The Contractor shall be liable for any damages or loss to the Village occasioned by negligence of the Contractor (or agent) or any person the Contractor has designed in the completion of the contract as a result of his or her being awarded the Contract. Contractor shall take care to avoid damage to Village's property, and the property of Village's tenants, vendors and patrons.

4.18 Hazardous materials. Contractor shall not store fuel (other than fuel in the gas tanks of parked vehicles), or hazardous, solid waste or other toxic materials at the premises. Used in this agreement, the term "hazardous material" means any hazardous or toxic substance, material waste, which is or becomes regulated by any local governmental authority in the state of Florida or the United States. Contractor agrees to indemnify and hold the Village harmless from any and all claims, demands, liabilities, losses, damages or expenses arising as a result of Contractor's breach or failure to perform any of the terms that are contained in this Section. Contractor further covenants and agrees with the Village that it will maintain the premises in a good condition and that it will not commit, or suffer to be committed, any waste of or on the premises. Contractor shall not use the premises for any unlawful purpose and shall comply with all laws and permitting requirements applicable now, or in the future, to the permitted use. Contractor shall not permit any offensive, or dangerous activity, nor any nuisance or other conduct at the premises in violation of the public policy of the Village, county or state. Contractor has agreed to maintain the premises in compliance with the provisions of this Section

4.19 Contractor shall ensure that for the length of this Contract that the sidewalk and curb are not materially deteriorated due to Contractor's use of the site (heavy equipment entering and exiting the premises). The Village shall periodically inspect the premises (defined areas of work) to advise of any maintenance issues that require attention during the leasehold. The Village representative shall communicate with Contractor within 24 hours of inspection, in order to advise Contractor of any necessary and/or immediate maintenance needs for the site. Of particular importance in maintaining the site is Contractor's minimal disturbance to the neighbors, and enhanced supervision of the site. If fill or other construction materials are placed on site, Contractor shall take all reasonable

_____ Village

_____ Contractor

efforts to minimize the spread of dust through the neighborhood by, *inter alia,* placing a tarp over the fill materials. Fill materials includes but is not limited to sand, soil, and cement. No materials or supplies may be left outdoors or visible other than within approved storage areas, and that requirement must be strictly complied with.

4.20 Interest. The Village shall make payment to Contractor within 30 days of receipt of the original written invoice, provided the Contractor has provided and sufficient backup documentation and the Village has accepted the work done by the Contractor. Interest shall accrue on unpaid invoices as provided by Florida Statutes Section 218.74.

4.21 Contractor shall not be entitled to any carrying charges or finance fees due to late payment by the Village.

4.22 Right to Withhold. If work under this Contract is not performed in accordance with the terms hereof, Village has the right to withhold any payment due to the Contractor, of any sums as the Village may deem ample to protect it against loss, or to ensure payment of claims arising there from, and, at its option, Village may apply such sums in such manner as Village may deem proper to secure itself or to satisfy such claims. The Village will provide Contractor with 10 days prior written notice in the event that it elects to exercise its right to withhold under this section.

4.23 The Contractor, subcontractors, suppliers and laborers ("subcontractors") are prohibited from placing a lien on Village's property. Contractor shall execute a similar Contract requirement with subcontractors confirming that subcontractors are prohibited from placing liens on Village's property. Further, both Contractor and subcontractor warrant not to file or record liens or notices of liens against Village property.

SECTION 5. COMMENCEMENT AND COMPLETION OF WORK. The Contractor shall commence work of the date established in the Notice to Proceed which shall stipulate dates as described in the bid document. The Contractor shall prosecute the work with faithfulness and diligence and shall complete the work not later than the required sixty (60) day time limitation.

SECTION 6. CONTRACTOR'S ACCEPTANCE OF CONDITIONS

6.1 The Contractor hereby agrees that he/she has carefully examined the sites for the work to be performed and has fully satisfied himself/herself that such sites are correct and suitable ones for the work to be performed and he/she assumes full responsibility therefore. The provisions of this agreement shall control any inconsistent provisions contained in the specifications. All Drawings, Specifications, and agreement items contained in this Project Manuel have been read and carefully considered by the Contractor, who understands the same and agrees to their sufficiency for the work to be done. It is expressly agreed that under no circumstances, conditions, or situations shall this agreement be more strongly construed against the Village than against the Contractor and his/his Surety.

6.2 Any ambiguity or uncertainty in the Specifications, Drawings or Project Manuel shall be interpreted and construed by the Village's Engineer and his/her decision shall be final and binding upon all parties.

6.3 It is distinctly understood and agreed that the passing, approval and/or acceptance of any part of the work material by the Village, its Architect and its Engineer, or by any agent or representative as in compliance with the terms of this agreement and/or of the Project Manual covering said work, shall not operate as a waiver by the Village of strict compliance with the terms of this agreement, and/or the Project Manual covering said work; and the Village may require the Contractor and/or his/her insurer to repair, replace, restore and/or make to comply strictly and in all things with this agreement and the Project Manual any and all of said work and/or services which within a period of one year from and after the date of the padding, approval, and/or acceptance of any such work or services, are found to be defective or to fail in any way to comply with the Drawings and Specifications. This provision shall not apply to materials or equipment normally expected to deteriorate or wear out and become subject to normal repair and replacement before their condition is discovered. The Contractor shall not be required to do normal maintenance work under the guarantee provisions. Failure on the part of the Contractor and/or his/her insurer, immediately after Notice to either, to repair or replace any such defective materials and workmanship shall entitle the Village, if it sees fit, to replace or repair the same and recover the reasonable cost of such replacement and/or repair from the Contractor and/or his insurer, who shall in any event be jointly and severally liable to the Village for

_____ Village

_____ Contractor

all damage, loss, and expense caused to the Village by reason of the Contractor's breach of this agreement and/or his/her failure to comply strictly and in all things with this agreement and with the Drawings and Specifications.

6.4 If the Village exercises the right, in writing, to modify special conditions, the Contractor shall update and submit any legal documents required during the initial Solicitation by no later than sixty (60) calendar days prior to the commencement of the option period. If the updated documents are not submitted by the Contractor in complete form within the time specified, the Village may rescind its option, declares the Contractor to be in default of its contractual obligations and award to the next lowest and responsive bidder under the Bid 2013-PR-005 or seek a new Bid Solicitation. The Village may, at its sole option, seek monetary restitution from the Contractor as a result of damages or excess cost sustained and/or may prohibit the Contractor from submitting for future Village Bids for a period of one (1) year.

6.5 Substitutions The Village of Palmetto Bay, Florida will not accept substitute shipments of any kind, unless approved in advance by the Village Manager or his designee. Contractor is expected to furnish the brand quoted in their bid response, once awarded. Any unapproved substitute shipments will be returned at the Contractor's expense.

6.6 Preliminary Matters

a. Starting The Project. The Contractor shall begin to perform the Work within 10 days after the Commencement Date stated in the Notice to Proceed, but no Work shall be done at the site prior to said Commencement Date.

b. Before Starting Construction – Rehabilitation. Before undertaking each part of the Work, the Contractor shall carefully study and compare the Contract Documents and check and verify pertinent figures shown thereon and all applicable field measurements. The Contractor shall promptly report in writing to the Village, the Architect and Engineer any conflict, error, or discrepancy which the Contractor may discover and shall obtain a written interpretation or clarification from the Village, Architect and Engineer before proceeding with any Work affected thereby. The Contractor shall submit to the Village, the Architect and Engineer for review those documents called for under the bid and this Contract.

c. Preconstruction – Pre-Rehabilitation Conference. A preconstruction conference attended by the Contractor, the Village, its Architect and Engineer and others as appropriate will be held to discuss the Work in accordance with the applicable procedures specified in this Agreement.

d. Finalizing Schedules. At least seven (7) days before the first Pre-Construction/Pre-Rehabilitation Meeting, a conference attended by the Contractor, the Village, the Architect and Engineer, and others as appropriate, the Contractor will submit the following documents, if required, for the Architect's review: Construction Schedule, Schedule of Values, MOT Plan (if applicable), Staging Plan, Mobilization Plan, submitted in accordance with the General Requirements.

SECTION 7. GENERAL CONDITIONS

7.1 Certificates Of Insurance.

After award, the Village shall immediately require that the Contractor provide the Village with the Certificate of Insurance. The Contractor shall furnish certificates of insurance to the Village prior to the commencement of operations. The certificates shall clearly indicate that the Contractor has obtained insurance in the type, amount, and classification as required for strict compliance with this Section and that no reduction in limits by endorsement during the policy term, or cancellation of this insurance shall be effective without 30 days prior written notice to the Village. The Contractor shall be required to comply with the following conditions and provide the insurance indicated below:

The Village shall not be held liable or responsible for any claims which may result from acts, errors or omissions of the Contractor or its Subcontractors, suppliers or laborers. In reviewing, approving or rejecting any submissions or acts of the Contractor, the Village in no way assumes responsibility or liability for the acts, errors or omissions of the Contractor or Subcontractors.

The Contractor shall not commence work under this Contract until it has obtained all insurance required by the Village. The Contractor shall defend, indemnify and hold the Village harmless from any and all claims, liability, losses, expenses and causes of action arising solely out of a negligent act, error, or omission or misconduct of the Contractor, or the Contractor's Subcontractors, suppliers and laborers incident to the performance of the Contractor's services under this Contract. The Contractor shall pay all claims, losses, fines, penalties, costs and expenses of any nature whatsoever resulting from its intentional misconduct or negligence.

The Contractor shall maintain during the term of this Contract the following insurance:

a. Comprehensive general liability insurance with broad form endorsement, including automobile liability, completed operations and products liability, contractual liability, severability of interest with cross liability provision, and personal injury and property damage liability with limits of $1,000,000 combined single limit per occurrence for bodily injury and property damage. The policy or policies shall name Village as additional insured and shall reflect the hold harmless provision contained herein.

b. Workers' Compensation Insurance shall be maintained during the life of the construction services contract and until such time the Village accepts all specified work as completed, in compliance with Chapter 440, Florida Statutes/statutory limits for all employees. The following must be maintained"

* Worker's Compensation Statutory
* Employer's Liability $100,000 each accident
  $500,000 Disease –policy limit
  $100,000 Disease-employee

c. Comprehensive Automobile and Vehicle Liability Insurance. This insurance shall be written in a comprehensive form and shall protect the bidder and the Village against claims for injuries to members of the public and/or damages to property of others arising from the Contractor's use of motor vehicles or any other equipment and shall cover operation with respect to on-site and offsite operations and insurance coverage shall extend to any motor vehicles or other equipment irrespective of whether the same is owned, non-owned or hired. The limit of liability shall not be less than $1,000,000 per occurrence, combined single limit for bodily injury liability and property damage liability. Coverage must be afforded on a form no more restrictive than the latest edition of the Business Automobile Liability Policy, without restrictive endorsement, as filed by the Insurance Service Office.

d. Contractor shall furnish to the Finance Director, Village of Palmetto Bay, 9705 East Hibiscus Street, Palmetto Bay, Florida 33157, certificate(s) of insurance which indicate that insurance coverage has been obtained from an insurance company authorized to do business in the State of Florida or otherwise secured in a manner satisfactory to the City, for those coverage types and amounts listed in Section 3, "Scope of Work" and Section 4 "Specifications", in an amount equal to 100% of the requirements and shall be presented to the Village prior to issuance of any Contract(s) or Award(s) Document(s). The Village of Palmetto Bay shall be named as "additional insured" with respect to this coverage.

e. The policies shall contain waiver of subrogation against the Village where applicable and shall expressly provide that the policy or policies are primary over any other insurance that the Village may have. The Village reserves the right to request a copy of the required policies for review. All policies shall contain a "severability of interest" or "cross liability" clause without obligation for premium payment of the Village.

f. All of the insurance is to be placed with Best rated A-8 or better insurance companies qualified to do business under the laws of the State of Florida. All deductibles or self-insured retentions must be declared to

_____ Village

_____ Contractor

and be approved by the Village Manager. The bidder shall be responsible for the payment of any deductible or self-insured retentions in the event of any claim.

7.2 Assignment. The Contractor shall not assign, transfer, convey, sublet or otherwise dispose of this Contract, including any or all of its right, title or interest therein, or his or its power to execute such Contract to any person, company or corporation without prior written consent of the Village. The Contractor shall not assign, transfer or pledge any interest in this Contract without the prior written consent of the Village; provided, however, that claims for money by the Contractor from the Village under this Contract may be assigned, transferred or pledged to a bank, trust company, or other financial institution without the Village's approval. Written notice of any assignment, transfer or pledge of funds shall be furnished within 10 days by the Contractor to the Village. None of the work or services under this Contract shall be subcontracted unless Contractor obtains prior written consent from the Village. Approved subcontractors shall be subject to each provision of this Contract and Contractor shall be responsible and indemnify the Village for all subcontractors' acts, errors or omissions.

7.3 Sunshine Law. As a political subdivision, the Village of Palmetto Bay is subject to the Florida Sunshine Act and Public Records Law. By submitting a Bid and executing a contract with the Village, Contractor acknowledges that the materials submitted are open to public inspection upon proper request. Contractor should take special note of this as it relates to proprietary information that might be included in its documentation provided to the Village.

7.4 Business Entity Disclosure Statement. Contractor and all subcontractors shall comply with the Conflict of Interest and Code of Ethics Ordinances of the Village of Palmetto Bay and Miami-Dade County, particularly Section 2-11.1(c), Miami Dade County Code.

7.5 Force Majeure. The performance of any act by the Village or Contractor hereunder may be delayed or suspended at any time while, but only so long as, either party is hindered in or prevented from performance by acts of God, the elements, war, rebellion, strikes, lockouts or any cause beyond the reasonable control of such party, provided however, the Village shall have the right to provide substitute service from third parties or Village forces and in such event the Village shall withhold payment due Contractor for such period of time. If the condition of force majeure exceeds a period of 14 days the Village may, at its option and discretion, cancel or renegotiate this Contract.

7.6 Waiver Of Jury Trial. The Village and the Contractor knowingly, irrevocably voluntarily and intentionally waive any right either may have to a trial by jury in State or Federal Court proceedings in respect to any action, proceeding, lawsuit or counterclaim based upon the Contract Documents or the performance of the Work there under.

7.7 Eligibility. All agents, employees and subcontractors of the bidder retained to perform services pursuant to this Agreement shall comply with all laws of the United States concerning work eligibility and comply with the Shannon Melendi Act, as adopted by the Village.

7.8 No Collusion. Attached to the Contract documents is the executed Non-Collusion Affidavit. Contractor's failure to execute the affidavit shall result in disqualification of the Contractor and termination of this Agreement.

7.9 Withdrawal Or Revision Of Bid Prior To And After Opening. Contractor is precluded from withdrawing its bid within 120 calendar days after the bid opening date.

7.10 Contractor shall not cause any mechanics' liens or any other encumbrances to affect the premises. At Village's option, relevant provisions of Chapter 713, Florida Statutes, shall be complied with by Contractor.

7.11 Workmanship of work performed will be inspected and approved by the Village Manager or his designee.

7.12 Indemnification. To the fullest extent permitted by Laws and Regulations, the Contractor shall indemnify, defend, and hold harmless the Village; the Consultant; and their officers, directors, agents, and employees, against and from all claims and liability arising under, by reason of or incidentally to the Contract or any performance of the Work, but not from the sole negligence or willful misconduct of the Village and/or the Consultant. Such indemnification by the Contractor shall include but not be limited to the following:

_____ Village

_____ Contractor

a. Liability or claims resulting directly or indirectly from the negligence or carelessness of the Contractor, its employees, or agents in the performance of the Work, or in guarding or maintaining the same, or from any improper materials, implements, or appliances used in its construction, or by or on account of any act or omission of the Contractor, its employees, or agents;

b. Liability or claims arising directly or indirectly from bodily injury, occupational sickness or disease, or death of the Contractor's or Subcontractor's own employees engaged in the Work resulting in actions brought by or on behalf of such employees against the Village and/or the Consultant;

c. Liability or claims arising directly or indirectly from or based on the violation of any law, ordinance, regulation, order, or decree, whether by the Contractor, its employees, or agents;

d. Liability or claims arising directly or indirectly from the use or manufacture by the Contractor, its employees, or agents in the performance of this Contract of any copyrighted or uncopyrighted composition, secret process, patented or unpatented invention, article, or appliance, unless otherwise specifically stipulated in this Contract;
e. Liability or claims arising directly or indirectly from the breach of any warranties, whether express or implied, made to the Village or any other parties by the Contractor, its employees, or agents;

f. Liabilities or claims arising directly or indirectly from the willful misconduct of the Contractor, its employees, or agents; and,

g. Liabilities or claims arising directly or indirectly from any breach of the obligations assumed under the Contract by the Contractor.

7.12.1 The Contractor shall reimburse the Village, and the Consultant for all costs and expenses, (including but not limited to fees and charges of Architect, Engineers, attorneys, and other professionals, and court costs) incurred by said Village, and the Consultant in enforcing the provisions of this Section.

7.12.2 The indemnification obligation under this section shall not be limited in any way by any limitation of the amount or type of damages, compensation, or benefits payable by or for the Contractor or any such subcontractor or other person or organization under workers' compensation acts, disability benefit acts, or other employee benefit acts. The Village shall not be held liable or responsible for any claims which may result from acts, errors or omissions of the Contractor or its subcontractors, suppliers or laborers. In reviewing, approving or rejecting any submissions or acts of the Contractor, the Village in no way assumes responsibility or liability for the acts, errors or omissions of the Contractor or subcontractors.

7.12.3 The Contractor shall not commence work under this contract until it has obtained all insurance required by the Village. The Contractor shall defend, indemnify and hold the Village harmless from any and all claims, liability, losses, expenses and causes of action arising solely out of a negligent act, error, or omission or misconduct of the Contractor, or the Contractor's subcontractors, suppliers and laborers incident to the performance of the Contractor's services under this contract. The Contractor shall pay all claims, losses, fines, penalties, costs and expenses of any nature whatsoever resulting from its intentional misconduct or negligence.

7.13 Surety Letter / Performance Bond/Payment Bond.

Evidence from a surety duly authorized to carry the business of Suretyship in the State of Florida indicating without conditions or qualifications that the Contractor is capable at the time of the bid solicitation of obtaining a Performance Bond and Payment Bond, each in an amount equal to 100% of the contract amount, pursuant to requirements as described on the Payment Bond Form found on pages 37-39 of the bid document. The letter shall make reference to the fact that the bonds would be applicable specifically to the Coral Reef Park Tennis/Racquetball Resurfacing Project. The evidence regarding bonding capacity shall take the form of a letter from a surety indicating

that such capacity exists for the Contractor. Letters indicating 'unlimited' bonding capability are not acceptable. Any surety providing such letter must be rated at least A or better and Class VIII or better by A.M. Best and Company. Evidence of surety's rating shall be attached to the letter. The letter musts specifically state that the surety has read the underlying Request for Bid and has evaluated the Contractor's backlog and work-in-progress in determining bonding capacity. As an alternative, or in addition to the surety letter required by this section, the Contractor may submit a letter or letters from bank(s) indicating a willingness to issue a letter of credit in the amount equal to 100% of contract amount without conditions or qualifications at the time of the bid submission. To be considered valid, each letter must be issued by a bank having long-term, unsecured debt ratings of not less than 'A' or 'A2', as applicable, issued by at least two of the three rating agencies (Fitch Ratings, Moody's Investor Service and Standard & Poor's Rating Group). The bank's long term, unsecured debt rating shall be stated in each letter of bank support.

7.14 Drug Free Workplace. Contractor shall provide for a drug free workplace under Florida Statute Section 287.087, as amended. Failure to provide proof of compliance when requested shall be cause for termination of this agreement. In order to have a drug-free workplace program, a business shall:

a. Publish a statement notifying employees that the unlawful manufacture, distribution, dispensing, possession, or use of a controlled substance is prohibited in the workplace and specifying the action that will be taken against employees for violations of such prohibition.

b. Inform employees about the dangers of drug abuse in the workplace, the business' policy of maintaining a drug-free workplace, any available drug counseling, rehabilitation, and employee assistance programs, and the penalties that may be imposed upon employees for drug abuse violations.

c. Give each employee engaged in providing the commodities or contractual services that are under this agreement a copy of the statement specified in subsection "a."

d. In the statement specified in subsection "a", notify the employees that, as a condition of working on the commodities or contractual services that are under Bid, the employee will abide by the terms of the statement and will notify the employer of any conviction of, or plea of guilty or nolo contendere to, any violation of Chapter 893 or of any controlled substance law of the United States or any state, for a violation occurring in the workplace no later than five (5) days after such conviction.

e. Impose a sanction on, or require the satisfactory participation in a drug abuse assistance or rehabilitation program, if such is available in the employee's community, by any employee who is so convicted.

f. Make a good faith effort to continue to maintain a drug-free workplace through implementation of this section.

7.15 Public Entity Crimes (PEC). Contractor has executed the Public Entity Crimes Form and has confirmed that the entity has not been placed on a convicted vendor list. Contractor, during the term of this agreement, may not be placed on the convicted vendor, as upon such a conviction, the Contractor may not transact business with any public entity in excess of the threshold amount provided in Sec. 287.017 for CATEGORY TWO for a period of 36 months from the date of being placed on the convicted vendor list.

7.16 Property. Property owned by the Village of Palmetto Bay is the responsibility of the Village of Palmetto Bay. Such property furnished to a Contractor for repair, modification, study, etc., shall remain the property of the Village of Palmetto Bay. Damages to such property occurring while in the possession of the Contractor shall be the responsibility of the Contractor. Damages occurring to such property while in route to the Village of Palmetto Bay shall be the responsibility of the Contractor. In the event that such property is destroyed or declared a total loss, the Contractor shall be responsible for replacement value of the property at the current market value, less depreciation of the property if any.

7.17 Contractor Qualifications And Submission Requirements. Contractor, consistent with the bid requirements has submitted the following as evidence of Contractor's qualifications and experience:

1. State of Florida or Miami-Dade County License

_____ Village

_____ Contractor

2. Articles of Incorporation
3. Relative Experience – list of similar projects performed for other municipalities, governmental agencies, or privately owned facilities for the past two (2) years
4. Bidder Qualification Statement

7.18 No Partnership Or Joint Venture. Nothing contained in this agreement or the underlying bid shall be deemed or construed to create a partnership or joint venture between the Village of Palmetto Bay and Contractor, or to create any other similar relationship between the parties.

7.19 Village's Responsibilities. The Village will furnish the lands upon which the Work is to be done, rights-of-way for access thereto, and such other lands which are designed for the use of the Contractor. Easements for permanent structures or permanent changes in existing facilities will be obtained and paid for by the Village, unless otherwise specified in the Contract Documents. Other access to such lands or rights-of-way for the Contractor's convenience shall be the responsibility of the Contractor.

The Contractor will provide for all additional lands and access thereto that may be required for temporary construction facilities or storage of material and equipment. The Village will, upon request, furnish to the Contractor, copies of all available boundary surveys and subsurface tests at no cost.

SPECIAL CONDITIONS

SECTION 8: SPECIAL CONDITIONS:

8.1 Time of Essence. As time is of the essence and as such Contractor is to strictly comply with the timeline for completion of work; with substantial liquidated damages for failure to meet the given completion date identified as sixty (60) days following issuance of a Notice to Proceed from Village to Contractor. The Contractor agrees to complete all specified renovations on or before the 60-day timeline. Exceptions in the form of an extension of time completion may be considered; however, should this be granted in writing by the Village. Failure to comply with the construction schedule shall be considered a material breach of this agreement.

8.2 Continuing the Work. The Contractor shall carry on the Work and adhere to the progress schedule during all disputes or disagreements with the Village. No Work shall be delayed or postponed pending resolution of any disputes or disagreements, except as the Contractor and the Village may otherwise agree in writing.

8.3 Complete Project Required / Liquidated Damages To Be Assessed:

These specifications describe the various items or classes of work required, enumerating or defining the extent of same necessary, but failure to list any item or classes under scope of the several sections shall not relieve the contractor from furnishing, installing or performing such work where required by any part of these specifications, or necessary to the satisfactory completion of the project on or before the deadline for completion.

Liquidated Damages of $100.00 per day shall be assessed to the Contractor for each day beyond the mandatory completion date should any work not be completed in its entirety. The undersigned Contractor will Substantially Complete the work by the 60-day deadline. Time for completion of the work shall be considered as the essence of this contract, and shall be subject to liquidated damages for delays as delineated above. The Liquidated Damages award shall apply to the base bid as identified in Exhibit 1,with full completion of the whole of the work. *In an effort to expedite project commencement the sub-contractors are asked to obtain their permits via the "walk thru" procedure.

8.4 Contractor's Responsibilities.

_____ Village

_____ Contractor

a. Supervision and Superintendence: The Contractor will supervise and direct the Work. He will be solely responsible for the means, methods, techniques, sequences and procedures of construction. The Contractor will employ and maintain a qualified supervisor or superintendent at the Work site who shall be designated in writing by the Contractor as the Contractor's representative at the site. The supervisor shall have full authority to act on behalf of the Contractor and all communications given to the supervisor shall be as binding as if given to the Contractor. The supervisor(s) shall be present at each site at all times as required to perform adequate supervision and coordination of the Work. (Copies of written communications given to the Superintendent shall be mailed to the Contractor's office).

b. Labor, Materials and Equipment:

1.The Contractor will provide competent, suitably qualified personnel to lay out the Work and perform construction as required by the Contract Documents. The Contractor will at all times maintain good discipline and order at the site.

2.The Contractor will furnish all materials, equipment, labor, transportation, construction equipment and machinery, tools, appliances, fuel, power, light, heat, local telephone, water and sanitary facilities and all other facilities and incidentals necessary for the execution, testing, initial operation and completion of the Work.

3.All materials and equipment will be new, except as otherwise provided in the Contract Documents. When special makes or grades of material which are normally packaged by the supplier or manufacturer are specified or approved, such materials shall be delivered to the site in their original packages or containers with seals unbroken and labels intact.

4.All materials and equipment shall be applied, installed, connected, erected, used, cleaned and conditioned in accordance with the instructions of the applicable manufacturer, fabricator, or processors, except as otherwise provided in the Contract Documents.

5. Copyrights and/or Patent Rights: Contractor warrants that there has been no violation of copyrights or patent rights in manufacturing, producing or selling of goods shipped or ordered, as a result of this Contract. The seller agrees to indemnify Village from any and all liability, loss or expense occasioned by any such violation.

6. Warranty / Guaranty: Contractor shall act as agent for the Village in the follow-up and compliance of all items under Warranty / Guarantee and complete all forms for Warranty / Guarantee coverage under this Contract.

8.5 Concerning Qualifications Of Subcontractors, Material Men, And Suppliers.

a. Contractor shall submit to the Village for acceptance a list of the names of Subcontractors and such other persons and organizations (including those who are to furnish principal items of materials or equipment) proposed for those portions of the Work as to which the identity of Subcontractor and other persons and organizations must be submitted as specified in the underlying Invitation to Bid. Within thirty (30) working days from the Notice of Award, the Village will notify the Bidder in writing if after due investigation, the Village has reasonable objection to any subcontractor, person, or organization on such list. Failure of the Village to make objection to any Subcontractor, person, or organization on the list within thirty (30) days of the receipt shall constitute an acceptance of such Subcontractor, person or organization. Acceptance of any such Subcontractor, person or organization shall not constitute a waiver of any right of the Village to reject defective work, material, or equipment, or work, material, or equipment not in conformance with the requirements of this Contract Document and all attachments.

b. If, prior to the Notice of Award, the Village has reasonable objection to and refuses to accept any Subcontractor, person or organization listed, the apparent low Bidder may, prior to Notice of Award, submit an acceptable substitute without an increase in their bid price.

c. The Contractor understands and agrees to specifically require and bind every Subcontractor to the applicable terms and conditions of the Contract Documents for the benefit of the Village. The Contractor

_____ Village

_____Contractor

shall be responsible for the coordination of the trades, Subcontractor and material men engaged upon their Work.

d. The Village will not undertake to settle any differences between the Contractor and its Subcontractors or between Subcontractors. If in the opinion of the Village, any Subcontractor on the Project proves to be incompetent or otherwise unsatisfactory, they shall be promptly replaced by the Contractor if and when directed by the Village in writing. The Contractor will not employ any Subcontractor, against whom the Village may have reasonable objection, nor will the Contractor be required to employ any Subcontractor who has been accepted by the Village, unless the Village determines that there is good cause for doing so.

e. The Contractor shall be fully responsible for all acts and omissions of his Subcontractors and of persons and organizations directly or indirectly employed by him and of persons and organizations for whose acts any of them may be liable to the same extent that they are responsible for the acts and omissions of persons directly employed by them. Nothing in the Contract Documents shall create any contractual relationship between Village and any Subcontractor or other person or organization having a direct contract with Contractor, nor shall it create any obligation on the part of Village to pay or to see to payment of any persons due subcontractor or other person or organization, except as may otherwise be required by law. Village may furnish to any Subcontractor or other person or organization, to the extent practicable, evidence of amounts paid to the Contractor on account of specified Work done in accordance with the schedule values.

f. The Contractor agrees to bind specifically every Subcontractor to the applicable terms and conditions of the Contract Documents for the benefit of the Village.

g. All Work performed for the Contractor by a Subcontractor shall be pursuant to an appropriate agreement between the Contractor and the Subcontractor.

h. The Contractor shall be responsible for the coordination of the trades, Subcontractors and material men engaged upon their Work.

i. The Contractor shall cause appropriate provisions to be inserted in all subcontracts relative to the Work to bind Subcontractors to the Contractor by the terms of these General Conditions and other Contract Documents insofar as applicable to the Work of Subcontractors, and give the Contractor the same power as regards to terminating any subcontract that the Village may exercise over the Contractor under any provisions of the Contract Documents.

j. The Village will not undertake to settle any differences between the Contractor and their Subcontractors or between Subcontractors.

k. If any Subcontractor on the Project proves to be incompetent or otherwise unsatisfactory, they shall be promptly replaced by the Contractor if and when directed by the Village in writing.

8.6 Safety And Protection. The Contractor will be responsible for initiating, maintaining and supervising all safety precautions and programs in connection with the Work, including but not limited to OSHA regulations. They will take all necessary precautions for the safety of, and will provide the necessary protection to prevent damage, injury or loss to:

a. All employees and other persons who may be affected thereby,
b. All the Work and all materials or equipment to be incorporated therein, whether in storage on or off the site, and
c. Other property at the site or adjacent thereto, including trees, shrubs, lawns, walks, pavements, roadways, structures and utilities not designated for removal, relocation or replacement in the course of construction.

_____ Village

_____Contractor

The Contractor will designate a responsible member of their organization at the site whose duty shall be the prevention of accidents. This person shall be the Contractor's Superintendent unless otherwise designated in writing by the Contractor to the Village.

8.7 Emergencies. In emergencies affecting the safety of persons or the Work or property at the site or adjacent thereto, the Contractor, without special instruction or authorization from the Village, is obligated to act, at his discretion, to prevent threatened damage, injury or loss. Contractor will give the Village prompt written notice of any significant changes in the Work or deviations from the Contract Documents caused thereby. If the Contractor believes that additional Work done by him in an emergency which arose from causes beyond his control entitles him to an increase in the Contract Price or an extension of the Contract Time as provided in the Contract documents.

8.8 Public Convenience And Safety. The Contractor shall, at all times, conduct the Work in such a manner as to insure the least practicable obstruction to public travel. The convenience of the general public and of the residents along and adjacent to the area of Work shall be provided for in a satisfactory manner, consistent with the operation and local conditions. "Area Closed" signs shall be placed immediately adjacent to the Work, in a conspicuous position, at such locations as traffic demands. At any time that streets are required to be closed, the Contractor shall notify law enforcement agencies and in particular, the Palmetto Bay Policing Unit, before the street is closed and again as soon as it is opened. Access to fire hydrants and other fire extinguishing equipment shall be provided and maintained at all times.

In order to lessen the bridge closure timeframe, construction/renovation or any work requiring bridge closure may not commence until all necessary materials, equipment, et car in receipt of Contractor. The Village will not accept reasoning for delays and/or excessive bridge closure time as awaiting fabrication and/or delivery of materials, supplies, equipment, etc.

8.9 Use of the Premises. The Contractor shall confine his apparatus, storage of materials, and operations of his workmen to the limits indicated by law, ordinances, permits and directions of the Village, and shall not unnecessarily encumber any part of the site. The Contractor shall not overload or permit any part of any structure to be loaded with such weight as will endanger its safety, nor shall he subject any party of the work to stresses or pressures that will endanger it. Furthermore, the Contractor shall enforce the Village's instructions in connection with signs, advertisements, fires and smoking.

8.10 Protection Of Existing Property Improvements. Any existing surface or subsurface improvements, such as pavements curbs, sidewalks, pavers, pipes or utilities, footings, or structures (including portions thereof), trees and shrubbery, not otherwise identified as part of the Work shall be protected from damage during maintenance activities. Any such improvements damaged during construction of the Project shall be restored at the expense of the Contractor to a condition equal to that existing at the time of award of Contract.

8.11 Differing Site Conditions. The Village as part of the bid document provided Specifications at Exhibit 2, and which document is part of the Contract Documents. The Contractor shall within forty eight (48) hours of their discovery, and before such conditions are disturbed, notify the Village in writing, of:

a. Subsurface or latent physical conditions at the site differing materially from those indicated in this Contract, or
b. Unknown physical conditions at the site, of an unusual nature, differing materially from those ordinarily encountered and generally inherent in Work of the character provided for in this Contract.
c. The Village's Architect shall promptly investigate the conditions, and if it finds that such conditions do materially so differ and cause an increase or decrease in the Contractor's cost of, or the time required for, performance of any part of the Work under this Contract, whether or not changed as a result of such conditions, an equitable adjustment shall be made and the Contract modified in writing accordingly.

_____ Village

_____ Contractor

d. In each such case, an increase or decrease in the Contract Price or an extension or shortening of the Contract Time, or any combination thereof, will be allowable to the extent that they are attributable to any such difference.
e. If the Village and the Contractor are unable to agree as to the amount or length thereof, a claim may be made as provided in Sections 15 and 16.
f. The Contractor's failure to give notice of differing site conditions within 48 hours of their discovery or before they are disturbed shall constitute a waiver of all claims in connection therewith, whether direct or consequential in nature. No claim of the Contractor under this clause shall be allowed unless the Contractor has given the notice as required above; provided, however, the time prescribed therefore may be extended by the Village. No claim by the Contractor for an equitable adjustment hereunder shall be allowed if asserted after final payment under this contract.

8.12 Physical Conditions – Underground Utilities

a. Shown or Indicated: The information and data shown or indicated in the Contract Documents with respect to existing Underground Utilities at or contiguous to the site are based on information and data furnished to the Village, the Architect or Engineer by the owners of such Underground Utilities or by others. Unless it is expressly provided in the Conditions and/or the Section entitled "Protection of Existing Facilities" of This Agreement, the Village and the Architect shall not be responsible for the accuracy or completeness of any such information or data, and the Contractor shall have full responsibility for reviewing and checking all such information and data, for locating all Underground Utilities shown or indicated in the Contract Documents, for coordination of the Work with the owners of such Underground Utilities during construction, for the safety and protection thereof and repairing any damage thereto resulting from the Work, the cost of which will be considered as having been included in the Contract Price.

b. Not Shown or Indicated: If an Underground Utility is uncovered or revealed at or contiguous to the site which was not shown or indicated in the Contract Documents and which the Contractor could not reasonably have been expected to be aware of, the Contractor shall identify the Village of such Underground Utility and give written notice thereof to that Village, and shall notify the Architect in accordance with the requirements of the Conditions herein and Section entitled "Protection of Existing Facilities" of This Agreement.

8.13 Reference Points. The Contractor shall furnish all lines, grades, and bench marks required for proper execution of the Work. The Contractor shall preserve all bench marks, stakes, and other survey marks, and in case of their removal or destruction by its own employees or by its subcontractor's employees, the Contractor shall be responsible for the accurate replacement of such reference points by professionally qualified personnel.

8.14 Asbestos, Hazardous Waste, Or Toxic Or Radioactive Materials. If the Contractor observes, uncovers, or otherwise becomes aware of any asbestos, hazardous waste, or toxic or radioactive material at the site to which the Contractor or any Subcontractor, Supplier, or other person may be exposed, the Contractor shall immediately notify the Village, the Architect and Engineer and thereafter confirm any oral notice in writing. The Village will promptly consult with the Architect an Engineer concerning such condition and determine the necessity of Village's retaining special Consultants or qualified experts to deal therewith. The Contractor shall not perform any Work in connection therewith prior to receipt of special written instructions from the Village through the Architect and Engineer.

SECTION 9. SPECIFICATIONS. The Site Specifications can be found attached hereto as Exhibit 2.

_____ Village

_____ Contractor

SECTION 10. ARCHITECT'S STATUS DURING CONSTRUCTION

10.1 Village's Representative. The Chief Building Official, Architect and Engineer will be the Village's representative during the construction period. The duties and responsibilities and the limitations of authority of the Chief Building Official, Architect and Engineer as the Village's representative during construction are set forth in the Contract Documents.

10.2 Visits To Site. The Chief Building Official, Architect and Engineer will make visits to the site during construction to observe the progress and quality of the Work and to determine, in general, if the Work is proceeding in accordance with the Contract Documents. The Architect and Engineer will not be required to make exhaustive or continuous on-site inspections to check the quality or quantity of the Work. The Architect and Engineer will not, during such visits or as a result of such observations of the Contractor's Work in progress, supervise, direct, or have control over the Contractor's Work.

10.3 Project Representation. The Architect may furnish a Resident Project Representative to assist in observing the performance of the Work. The duties, responsibilities, and limitations of authority of any such Resident Project Representative and assistants will be as provided in the Conditions to this Agreement.

10.4 Clarifications And Interpretations. The Architect and Engineer will issue with reasonable promptness such written clarifications or interpretations of the requirements of the Contract Documents (in the form of Drawings or otherwise) as the Architect and Engineer may determine necessary, which shall be consistent with or reasonably inferable from the overall intent of the Contract Documents.

10.5 Authorized Variations In Work. The Architect and Engineer may authorize minor variations in the Work from the requirements of the Contract Documents which do not involve an adjustment in the Contract Price or the Contract Time and are consistent with the overall intent of the Contract Documents. These may be accomplished by a Field Order and will require the Contractor to perform the Work involved promptly. If the Contractor believes that a Field Order justifies an increase in the Contract Price or an extension of the Contract time and the parties are unable to agree as to the amount or extent thereof, the Contractor may make a claim therefore as provided under the indemnification or insurance provision..

10.6 Rejecting Defective Work. The Architect will have authority to reject Work which the Architect believes to be defective and will also have authority to require special inspection or testing of the Work as provided in this agreement, whether or not the Work is fabricated, installed, or completed.

10.7 Contractor Submittals, Change Orders, And Payments

a. In accordance with the procedures set forth in the in this Agreement, the Architect and Engineer will review all Contractor submittals, including shop drawings, samples, substitutes, or "or equal" items, etc., in order to determine if the items covered by the submittals will, after installation or incorporation in the Work, conform to the requirements of the Contract Documents and be compatible with the design concept of the completed project as a functioning whole as indicated by the Contract Documents. The Architect's and Engineer's review will not extend to means, methods, techniques, sequences or procedures of construction or to safety precautions or programs incident thereto.

b. In connection with the Architect's responsibilities as to Change Orders, see Subsection 10.9 and Section 11.

c. In connection with the Architect's and Engineer's responsibilities in respect of Applications for Payment, see provision relating to same.

10.8 Decisions On Disputes.

_____ Village

_____ Contractor

a. The Architect will be the initial interpreter of the requirements of the Contract Documents and judge of the acceptability of the Work thereunder. Claims, disputes, and other matters relating to the acceptability of the Work; the interpretation of the requirements of the Contract Documents pertaining to the performance of the Work; and those claims in respect to changes in the Contract Price or Contract Time will be referred initially to the Architect in writing with a request for formal decision in accordance with this Section, which the Architect will render in writing within thirty (30) days of receipt of the request. Written notice of each such claim, dispute, and other matter will be delivered by the Contractor to the Architect promptly (but in no event later than thirty (30) days) after the occurrence of the event giving rise thereto. Written supporting data will be submitted to the Architect within sixty (60) days after such occurrence unless the Architect allows an additional period of time to ascertain more accurate data in support of the claim.

b. When functioning as arbiter and judge, the Architect will not show partiality to the Village or the Contractor and will not be liable in connection with any interpretation or decision rendered in good faith in such capacity. The rendering of a decision by the Architect with respect to any such claim, dispute, or other matter (except any which have been waived by the making or acceptance of final payment as provided in this agreement). will be a condition precedent to any exercise by the Village or the Contractor of such rights or remedies as either may otherwise have under the Contract Documents or by Law or Regulations in respect of any such claim, dispute, or other matter.

10.9 Limitation On Architect's Responsibilities

a. Neither the Architect's authority to act under this Section or other provisions of the Contract Documents nor any decision made by the Architect in good faith either to exercise or not exercise such authority shall give rise to any duty or responsibility of the Architect to the Contractor, any Subcontractor, any Supplier, any surety for any of them, or any other person or organization performing any of the Work.

b. Whenever in the Contract Documents the terms "as ordered," "as directed," "as required," "as allowed," "as reviewed," "as approved," or terms of like effect or import are used, or the adjectives "reasonable," "suitable," "acceptable," "proper," or "satisfactory" or adjectives of like effect or import are used to describe a requirement, direction, review, or judgment of the Architect as to the Work, it is intended that such requirement, direction, review, or judgment will be solely to evaluate the Work for compliance with the requirements of the Contract Documents, and conformance with the design concept of the completed Project as a functioning whole as indicated by the Contract Documents, unless there is a specific statement indicating otherwise. The use of any such term or adjective shall not be effective to assign to the Architect any duty or authority to supervise or direct the performance of the Work or any duty or authority to undertake responsibility contrary to the provisions relating to being an independent contractor.

c. The Architect will not have authority over or be responsible for the Contractor's means, methods, techniques, sequences, or procedures of construction, or the safety precautions and programs incident thereto, or for any failure of the Contractor to comply with Laws and Regulations, applicable to the performance of the Work. The Architect will not be responsible for the Contractor's failure to perform the Work in accordance with the Contract Documents.

d. The Architect will not be responsible for the acts or omissions of the Contractor nor of any subcontractor, supplier, or any other person or organization performing any of the Work.

SECTION 11. CHANGES IN THE WORK

11.1 General

a. Without invalidating the Agreement and without notice to any surety, the Village may at any time or from time to time, order additions, deletions, or revisions in the Work; these will be authorized by a written

Field Order and/or a Change Order issued by the Architect. Upon receipt of any such document, the Contractor shall promptly proceed with the Work involved which will be performed under the applicable conditions of the Contract Documents. Attached hereto is the Form Change Order, which shall provide additional instructions, required additional Work or direct the omission of Work previously ordered. Only those changes in the Work that are approved on the Change Order, in the Form attached hereto, and executed by an authorized representative of Village ("Change Order"), shall be binding on the Village.

b. If the Village and the Contractor are unable to agree as to the extent, if any, of an increase or decrease in the Contract Price or an extension or shortening of the Contract Time that should be allowed as a result of a Field Order, a claim may be made therefore as provided in section 1 or 13.

c. The Contractor shall not be entitled to an increase in the Contract Price nor an extension of the Contract Time with respect to any Work performed that is not required by the Contract Documents as amended, modified, supplemented by Change Order, except in the case of an emergency and except in the case of uncovering Work as provided in this agreement.

d. The Village and the Contractor shall execute appropriate Change Orders covering:

1.changes in the Work which are ordered by the Village pursuant to the provisions of this agreement;

2.changes required because of acceptance of defective Work under this agreement;

3.changes in the Contract Price or Contract Time which are agreed to by the parties; or

4.any other changes agreed to by the parties.

d. If notice of any change is required by the provisions of any Bond to be given to a surety, the giving of any such notice will be the Contractor's responsibility, and the amount of each applicable Bond shall be adjusted accordingly.

f. Village may order changes in the Work by initiating a change order request, setting forth in detail the nature of the requested change. Upon receipt of a Change Order Request, the Contractor shall prepare a statement setting forth in detail, with a suitable detailed breakdown by trades and work classifications with respect to a change in the scope of the construction and a detailed breakdown of the time and expenses related to the design phase, the Contractor's estimate of the Changes in the Contract Sum attributable to the changes set forth in such Change Order Request and proposed adjustments, if any to the Substantial Completion Date resulting from such Change Order Request. If the Village and the Contractor agree on a cost ("agreed Cost") a Change Order shall be processed by the Village and delivered to the Contractor for signature. Contractor shall not commence changes in the Work until it receives Village's written Notice to Proceed or the Change Order is executed. Agreement on any Change Order shall constitute a final settlement on all items affected therein, including without limitation any adjustment in the Contract Sum, the Substantial Completion Date, subject to performance thereof and payment therefore pursuant to the terms of the Agreement and such Change Order. Work provided by unit price may be increased or decreased in quantity as directed by the Village approval, provided that the basis for adjustment of the Contract Sum shall be the unit prices agreed upon by the Village upon the date of this Agreement.

g. In the event the Village and the Contractor cannot agree on any adjustment in the Contract Sum, extensions to the Contract Time, or adjustment to the Substantial Completion Date, the Contractor shall nevertheless proceed to perform the Work required by the Village's Change Order Request upon receipt of the Village's written Notice to Proceed. The Contractor shall keep separate records of all costs and time required to perform the Work required by the Change Order Request, and an equitable adjustment will be made upon agreement between the Contractor and Village. The Contractor shall submit its time and material costs that accrue as a result of the Change Order Request on a weekly basis. If the Village does

not approve such submittals within seven (7) days following submission, the Contractor may cease work related to such Change Order Request until the parties agree upon the terms and conditions of such Change Order Request.

h. In the event that changes in the Work are required on an emergency basis in order to protect the health and safety of the public, the Contractor shall proceed at the written direction of the Village's authorized agent without a written Change Order from Village. The Contractor shall keep separate records of all costs and time required to perform the Work. After review and approval by the Village, the Contractor shall invoice Village in accordance on a time and materials basis. In the event that the Work can be stopped without any further harm to the public but additional Work is necessary, the Contractor shall deliver the Contractor's Estimate to the Village as soon as practical and comply with the provisions herein.

i. It is understood and agreed that refinement and detailing will be accomplished from time to time with respect to the plans and specifications and addenda. No adjustment in the Contract Sum or the Substantial Completion Date shall be made unless (a) such refinement or detailing results in changes in the scope, quality, function and/or intent of the plans and specifications and addenda not reasonably inferable or anticipatable by a Contractor of the Contractor's experience and expertise; (b) the Contractor advises Village in writing within 10 calendar days of the Contractor's receipt of said refinements and details that an adjustment is required; and (c) Village agrees to the adjustment.

j. Unless otherwise provided in the Change Order, agreement on any Change Order shall constitute a final settlement and release by the Contractor of all matters relating to the change in the Work which is subject of the Change Order, including but not limited to, all direct and indirect costs associated with such change and any and all adjustments to the Contract Sum and the construction schedule.

11.2 Allowable Quantity Variations

a. In the event of an increase or decrease in bid item quantity of a unit price within the Contract, the total amount of Work actually done or materials or equipment furnished shall be paid for according to the unit price established for such Work under the Contract Documents, wherever such unit price has been established; provided, that an adjustment in the Contract Price may be made for changes which result in an increase or decrease in the quantity of any unit price bid item of the Work in excess of twenty-five (25) percent. The Contractor shall prepare a detail description of work showing quantities, pricing, and economic and market justifications supporting the increase in price. The Village will either accept or reject the price increase.

b. In the event a part of the Work is to be entirely eliminated and no lump sum or unit price is named in the Contract Documents to cover such eliminated Work, the price of the eliminated Work shall be agreed upon in writing by the Village and the Contractor. If the Village and the Contractor fail to agree upon the price of the eliminated Work, said price shall be determined in accordance with the provisions of Section 17, below.

SECTION 12.CHANGE OF CONTRACT PRICE

12.1 General

a. The Contract Price constitutes the total compensation payable to the Contractor for performing the Work. All duties, responsibilities, and obligations assigned to or undertaken by the Contractor shall be at its expense without change in the Contract Price.

b. The Contract Price may only be changed by a Change Order. Any claim for an increase in the Contract Price shall be based on written notice delivered by the Contractor to the Architect promptly (but in no event later than thirty (30) days) after the occurrence of the event giving rise to the claim and stating the general

nature of the claim. Notice of the amount of the claim with supporting data shall be delivered within sixty (60) days after such occurrence (unless the Architect allows an additional period of time to ascertain more accurate data in support of the claim) and shall be accompanied by the Contractor's written statement that the amount claimed covers all known amounts (direct, indirect, and consequential) to which the Contractor is entitled as a result of the occurrence of said event. All claims for adjustment in the Contract Price shall be determined by the Architect if the Village and the Contractor cannot otherwise agree on the amount involved. No claim for an adjustment in the Contract Price will be valid if not submitted in accordance with this Section.

c. The value of any Work covered by a Change Order or of any claim for an increase or decrease in the Contract Price shall be determined in one of the following ways:

1. Where the Work involved is covered by unit prices contained in the Contract Documents, by application of unit prices to the quantities of the items involved.

2. By mutual acceptance of a lump sum, which may include an allowance for overhead and profit not necessarily in accordance with Section 12.4.

3. On the basis of the cost of Work (determined as provided in Sections 12.2 and 12.3) plus a Contractor's fee for overhead and profit (determined as provided in Section 12.4).

12.2 Cost Of Work (Based On Time And Materials)

a. General: The term "Cost of Work" means the sum of all costs necessarily incurred and paid by the Contractor for labor, materials, and equipment in the proper performance of extra Work. Except as otherwise may be agreed to in writing by the Village, such costs shall be in amounts no higher than those prevailing in the locality of the Project. Whenever any extra Work is in progress, for which the definite price has not been agreed on in advance, the Contractor shall each day, report to the Architect the amount and cost of the labor and material used, and any other expense incurred in such extra Work on the preceding day, and no claim for compensation for such extra Work will be allowed unless such report shall have been made.

b. Labor: The cost of labor used in performing extra Work by the Contractor, a subcontractor, or other forces will be the sum of the following:

1. The actual wages paid plus any employer payments to, or on behalf of workers for fringe benefits including health and welfare, pension, vacation, and similar purposes. The cost of labor may include the wages paid to foremen when determined by the Architect that the services of foremen do not constitute a part of the overhead allowance.
2. All payment imposed by state and federal laws including, but not limited to, compensation insurance, and social security payments.
3. The amount paid for subsistence and travel required by collective bargaining agreements, or in accordance with the regular practice of the employer.
4. At the beginning of the extra Work and as later requested by the Architect, the Contractor shall furnish the Architect proof of labor compensation rates being paid.

c. Materials: The cost of materials used in performing extra Work will be the cost to the purchaser, whether Contractor or subcontractor, from the supplier thereof, except as the following are applicable:

1. Trade discounts available to the purchaser shall be credited to the Village notwithstanding the fact that such discounts may not have been taken by the Contractor.

_____ Village

_____Contractor

2. For materials secured by other than a direct purchase and direct billing to the purchaser, the cost shall be deemed to be the price paid to the actual supplier as determined by the Architect. Markup except for actual costs incurred in the handling of such materials will not be allowed.

3. Payment for materials from sources owned wholly or in part by the purchaser shall not exceed the price paid by the purchaser for similar materials from said sources on extra Work items or the current wholesale price for such materials delivered to the Work site, whichever price is lower.

4. If in the opinion of the Architect the cost of material is excessive, or the Contractor does not furnish satisfactory evidence of the cost of such material, then the cost shall be deemed to be the lowest current wholesale price for the quantity concerned delivered to the Work site less trade discount. The Village reserves the right to furnish materials for the extra Work and no claim shall be made by the Contractor for costs and profit on such materials.

d. Equipment: The Contractor will be paid for the use of equipment as stated in the latest edition of the "Compilation of Rental Rates for Construction Equipment" by Associated Equipment Distributors. Such rental rate will be used to compute payments for equipment whether the equipment is under the Contractor's control through direct ownership, leasing, renting, or another method of acquisition. The rental rate to be applied for use of each item of equipment shall be the rate resulting in the least total cost to the Village for the total period of use. The Contractor may furnish cost data which might assist the Architect in the establishment of the rental rate.

1. All equipment shall, in the opinion of the Architect, be in good working condition and suitable for the purpose for which the equipment is to be used.

2. Before construction equipment is used on the extra Work, the Contractor shall plainly stencil or stamp an identifying number thereon at a conspicuous location, and shall furnish to the Architect, in duplicate, a description of the equipment and its identifying number.

3. Unless otherwise specified, manufacturer's ratings and manufacturer approved modifications shall be used to classify equipment for the determination of applicable rental rates. Equipment which has no direct power unit shall be powered by a unit of at least the minimum rating recommended by the manufacturer.

4. Individual pieces of equipment or tools having a replacement value of $100 or less, whether or not consumed by use, shall be considered to be small tools and no payment will be made therefore.

5. Rental time will not be allowed while equipment is inoperative due to breakdowns.

d. Equipment on the Work Site: The rental time to be paid for equipment on the Work site shall be the time the equipment is in productive operation on the extra Work being performed and, in addition, shall include the time required to move the equipment to the location of the extra Work and return it to the original location or to another location requiring no more time than that required to return it to its original location; except, that moving time will not be paid if the equipment is used on other than the extra Work, even though located at the site of the extra Work. Loading and transporting costs will be allowed, in lieu of moving time, when the equipment is moved by means other than its own power, except that no payment will be made for loading and transporting costs when the equipment is used at the site of the extra Work on other than the extra Work. The following shall be used in computing the rental time of equipment on the Work site.

1. When hourly rates are listed, any part of an hour less than 30 minutes of operation shall be considered to be 1/2 hour of operation, and any part of an hour in excess of 30 minutes will be considered one hour of operation.

_____ Village

_____ Contractor

2. When daily rates are listed, any part of a day less than 4 hours operation shall be considered to be 1/2 day of operation. When Village-operated equipment is used to perform extra Work to be paid for on a time and materials basis, the Contractor will be paid for the equipment and operator, as set forth in Sections (3), (4), and (5), following.

3. Payment for the equipment will be made in accordance with the provisions in subsection d, herein.

4. Payment for the cost of labor and subsistence or travel allowance will be made at the rates paid by the Contractor to other workers operating similar equipment already on the Work site, or in the absence of such labor, established by collective bargaining agreements for the type of workmen and location of the extra Work, whether or not the operator is actually covered by such an agreement. A labor surcharge will be added to the cost of labor described herein in accordance with the provisions of Section 12, herein, which surcharge shall constitute full compensation for payments imposed by state and federal laws and all other payments made to or on behalf of workers other than actual wages.

5. To the direct cost of equipment rental and labor, computed as provided herein, will be added the allowances for equipment rental and labor as provided in Section 12.3, herein.

12.3 Special Services

a. Special Work or services are defined as that Work characterized by extraordinary complexity, sophistication, or innovation or a combination of the foregoing attributes which are unique to the construction industry. The following may be considered by the Architect in making estimates for payment for special services:

1. When the Architect and the Contractor, by agreement, determine that a special service or Work is required which cannot be performed by the forces of the Contractor or those of any of its subcontractors, the special service or Work may be performed by an entity especially skilled in the Work to be performed. After validation of invoices and determination of market values by the Architect, invoices for special services or Work based upon the current fair market value thereof may be accepted without complete itemization of labor, material, and equipment rental costs.

2. When the Contractor is required to perform Work necessitating special fabrication or machining process in a fabrication or a machine shop facility away from the job site, the charges for that portion of the Work performed at the off-site facility may, by agreement, be accepted as a special service and accordingly, the invoices for the Work may be accepted without detailed itemization.

3. All invoices for special services will be adjusted by deducting all trade discounts offered or available, whether the discounts were taken or not. In lieu of the allowances for overhead and profit specified in this agreement, an allowance of five (5) percent will be added to invoices for special services.

c. All Work performed hereunder shall be subject to all of the provisions of the Contract Documents and the Contractor's sureties shall be bound with reference thereto as under the original Agreement. Copies of all amendments to surety bonds or supplemental surety bonds shall be submitted to the Village for review prior to the performance of any Work hereunder.

12.4 Reserved.

12.5 Excluded Costs

a. The term "Cost of the Work" shall not include any of the following:

1. Payroll costs and other compensation of Contractor's officers, executives, principals (of partnership and sole proprietorships) general managers, Architect, engineers, estimators, attorneys' auditors accountants, purchasing and contracting agents, expediters, time keepers, clerks, and other personnel employed by Contractor whether at the site or in Contractor's principal or a branch office for general administration of the Work and not specifically covered by the termination for default provision of this Agreement all of which are to be considered administrative costs covered by the Contractor's allowance for overhead and profit;
2. Expenses of Contractor's principal and branch offices other than Contractor's office at the site;
3. Any part of Contractor's capital expenses, including interest on Contractor's capital employed for the Work and charges against Contractor for delinquent payments;
4. Cost of premiums for all Bonds and for all insurance whether or not Contractor is required by the Contract Documents to purchase and maintain the same (except for the cost of premiums covered by the termination for default provision);
5. Costs due to the negligence of Contractor, any Subcontractor, or anyone directly employed by any of them or for whose acts any of them may be liable, including but not limited to, the correction of defective work, disposal of materials or equipment wrongly supplied, and making good any damage to property.

SECTION 13.CHANGE OF CONTRACT TIME

13.1 General

a. The Contract Time may only be changed by a Change Order. Any claim for an extension of the Contract Time shall be based on written notice delivered by the Contractor to the Architect promptly (but in no event later than seven (7) days) after the occurrence of the event giving rise to the claim and stating the general nature of the claim. Notice of the extent of the claim with supporting data shall be delivered within 15 days after such occurrence (unless the Architect allows an additional period of time to ascertain more accurate data in support of the claim) and shall be accompanied by the Contractor's written statement that the adjustment claimed is the entire adjustment to which the Contractor has reason to believe it is entitled as a result of the occurrence of said event. All claims for adjustment in the Contract Time shall be determined by the Architect in accordance with Section 12 if the Village and the Contractor cannot otherwise agree. No claim for an adjustment in the Contract Time will be valid if not submitted in accordance with the requirements of this Section.

b. The Contract Time will be extended in an amount equal to time lost due to delays beyond the control of the Contractor provided that such time lost affects the critical path as shown on the schedule if a claim is made therefore as provided in Section 13.1a. Such delays shall include: acts or neglect by the Village or others performing additional Work as contemplated by Section 12, or by acts of God or of the public enemy, fire, floods, epidemics, quarantine restrictions, strikes, labor disputes, sabotage, or freight embargoes.

c. Force Majeure: The performance of this Agreement may be suspended and the obligations of either party excused in the event of and during the period that such performance is prevented or delayed by a Force Majeure occurrence.

d. All time limits stated in the Contract Documents are of the essence of the Agreement.

13.2 Extensions Of Time For Delay Due To Inclement Weather

a. Contract Times may be extended by the Architect because of delays in the completion of the Work due to unusually severe weather, provided that the Contractor shall, within ten (10) days of the beginning of any such delay, notify the Architect in writing of the cause of delay and request an extension of Contract Times. The Architect will ascertain the facts and the extent of the delay and extend the Contract times when, in its judgment, the findings of the fact justify such an extension.

_____ Village

_____ Contractor

b. The Contractor shall base its construction schedule upon the inclusion of the number of days of inclement weather specified herein. No extension of the Contract Time due to inclement weather will be considered until after the said number of days of inclement weather has been reached. However, no reduction in Contract Time will be made if said number of days of inclement weather is not reached.

SECTION 14. WARRANTY AND GUARANTEE; TESTS AND INSPECTIONS; CORRECTION, REMOVAL, OR ACCEPTANCE OF DEFECTIVE WORK

14.1 Warranty And Guarantee. The Contractor warrants and guarantees to the Village and the Architect that all Work will be in accordance with the Contract Documents and will not be defective. Prompt notice of defects known to the Village or Architect shall be given to the Contractor. All defective Work, whether or not in place, may be rejected, corrected, or accepted as provided in this section.

14.2 Access To Work. The Architect, Engineer and other representatives of the Village, testing agencies, and governmental agencies with jurisdictional interests shall have access to the Work at reasonable times for their observation, inspections, and testing. The Contractor shall provide proper and safe conditions for such access.

14.3 Tests And Inspections.

a. The Contractor shall give the Architect timely notice of readiness of the Work for all required inspections, tests, or approvals.

b. If Laws or Regulations of any public body having jurisdiction other than the Village require any Work to specifically be inspected, tested, or approved, the Contractor shall pay all costs in connection therewith. The Contractor shall also be responsible for and shall pay all costs in connection with any inspection or testing required in connection with the Village's or the Architect's acceptance of a Supplier of materials or equipment proposed as a substitution or (or-equal) to be incorporated in the Work, or of materials or equipment submitted for review prior to the Contractor's purchase thereof for incorporation in the Work. The costs of all inspections, tests, and approvals in addition to the above which are required by the Contract Documents shall be paid by the Village (unless otherwise specified). The Contractor will pay for failed tests and "stand-by time" by the Laboratory Tests personnel and others.

c. The Architect will make, or have made, such inspections and test as the Architect deems necessary to see that the Work is being accomplished in accordance with the requirements of the Contract Documents. Unless otherwise specified in this Agreement, the cost of such inspection and testing will be borne by the Village. In the event such inspections or tests reveal non-compliance with the requirements of the Contract Documents, the Contractor shall bear the cost of corrective measures deemed necessary by the Architect, as well as the cost of subsequent re-inspection and retesting. Neither observations by the Architect nor inspections, tests, or approvals by others shall relieve the Contractor from the Contractor's obligation to perform the Work in accordance with the Contract Documents.

d. All inspections, tests, or approvals other than those required by Laws or Regulations of any public body having jurisdiction shall be performed by organizations acceptable to the Architect and the Contractor.

e. If any Work (including the Work of others) that is to be inspected, tested, or approved is covered without written concurrence of the Architect, it must, if requested by the Architect, be uncovered for observation. Such uncovering shall be at the Contractor's expense unless the Contractor has given the Architect timely notice of the Contractor's intention to perform such test or to cover the same and the Architect has not acted with reasonable promptness in response to such notice.

f. If any Work is covered contrary to the written request of the Architect, it must, if requested by the Architect, be uncovered for the Architect's observation and replaced at the Contractor's expense.

g. If the Architect considers it necessary or advisable that covered Work be observed by the Architect or inspected or tested by others, the Contractor, at the Architect's request, shall uncover, expose, or otherwise make available for observation, inspection, or testing as the Architect may require, that portion of the Work in question, furnishing all necessary labor, material, and equipment. If it is found that such Work is defective, the Contractor shall bear all direct, indirect, and consequential costs and damages of such uncovering, exposure, observation, inspection, and testing and of satisfactory reconstruction, including but not limited to fees and charges of Architect, engineers, attorneys, and other professionals. However, if such Work is not found to be defective, the Contractor shall be allowed an increase in the Contract Price or an extension of the Contract Time, or both, directly attributable to such uncovering, exposure, observation, inspection, testing, and reconstruction; and, if the parties are unable to agree as to the amount or extent thereof, the Contractor may make a claim therefore as provided above.

14.4 Village May Stop The Work. If the Work is defective, or the Contractor fails to perform Work in such a way that the completed Work will conform to the Contract Documents, the Village may order the Contractor to stop the Work, or any portion thereof, until the cause for such order has been eliminated; however, this right of the Village to stop the Work shall not give rise to any duty on the part of the Village to exercise this right for the benefit of the Contractor or any other party.

14.5 Correction Or Removal Of Defective Work. If required by the Architect, the Contractor shall promptly, either correct all defective Work, whether or not fabricated, installed, or completed, or, if the Work has been rejected by the Architect, remove it from the site and replace it with non-defective Work. The Contractor shall bear all direct, indirect and consequential costs and damages of such correction or removal, including but not limited to fees and charges of Architect, Engineers, attorneys, and other professionals made necessary thereby.

14.6 One-Year Correction Period.

a. If within one year after the date of Substantial Completion or such longer period of time as may be prescribed by Laws or Regulations or by the terms of any applicable special guarantee required by the Contract Documents or by any specific provision of the Contract Documents, any Work is found to be defective, the Contractor shall promptly, without cost to the Village and in accordance with Village's written notification, either correct such defective Work, or, if it has been rejected by the Village, remove it from the site and replace it with non-defective Work. If the Contractor does not promptly comply with the such notification, or in an emergency where delay would cause serious risk of loss or damage, the Village may have the defective Work corrected or the rejected Work removed and replaced, and all direct, indirect, and consequential costs and damages of such removal and replacement including but not limited to fees and charges of Architect, engineers, attorneys and other professionals will be paid by the Contractor.

b. Where defective Work (and damage to other Work resulting there from) has been corrected, removed or replaced under Subsection 14.6, the correction period hereunder, with respect to such Work will be extended for an additional period of one year after such correction or removal and replacement has been satisfactorily completed.

SECTION 15.PAYMENTS TO CONTRACTOR AND COMPLETION

15.1 Schedule Of Values (Lump Sum Price Breakdown). The schedule of values or lump sum price breakdown established as provided in this Agreement shall serve as the basis for progress payments and will be incorporated into a form of Application for Payment acceptable to the Architect.

15.2 Price Bid Schedule. Progress payments on account will be based on the amount of work completed.

15.3 Application For Progress Payment.

_____ Village

_____ Contractor

a. Unless otherwise prescribed by law, on the 25th of each month, or other agreed upon date, the Contractor shall submit to the Architect for review, an Application for Payment filled out and signed by the Contractor covering the Work completed as of the date of the Application and accompanied by such supporting documentation as is required by the Contract Documents.

b. The Application for Payment shall identify, as a subtotal, the amount of the Contractor's Total Earnings to Date, plus the Value of Materials Stored at the Site which have not yet been incorporated in the Work, and less a deductive adjustment for materials installed which were not previously incorporated in the Work, but for which payment was allowed under the provisions for payment for Materials Stored at the Site, but not yet incorporated in the Work.

c. The Net Payment Due to the Contractor shall be the above-mentioned subtotal from which shall be deducted the amount of retainage specified in this Agreement, and the total amount of all previous payments made to the Contractor.

d. The Value of Materials Stored at the Site shall be an amount equal to the specified percent of the value of such materials as set forth in this Agreement. Said amount shall be based upon the value of all acceptable materials and equipment not incorporated in the Work but delivered and suitably stored at the site or at another location agreed to in writing; provided, each such individual item has a value of more than $5,000 and will become a permanent part of the Work. The Application for Payment shall also be accompanied by a bill of sale, invoice, or other documentation warranting that the Contractor has received the materials and equipment free and clear of all liens, charges, security interests, and encumbrances (which are hereinafter in these General Conditions referred to as "Liens") and evidence that the materials and equipment are covered by appropriate property insurance and other arrangements to protect the Village's interest therein, all of which will be satisfactory to the Village.

15.4 Contractor's Warranty Of Title. The Contractor warrants and guarantees that title to all Work, materials, and equipment covered by an Application for Payment, whether incorporated in the Work or not, will pass to the Village no later than the time of final payment free and clear of all liens.

15.5 Review Of Applications For Progress Payment

a. The Architect will, within seven (7) days after receipt of each Application for Payment, either indicate in writing a recommendation of payment and present the Application to the Village, or return the Application to the Contractor indicating in writing the Architect's reasons for refusing to recommend payment. In the later case, the Contractor may make the necessary corrections and resubmit the Application. Thirty days after presentation of the Application for Payment with the Architect's recommendation, the amount recommended will (subject to the provisions of Section 17) become due and when due will be paid by the Village to the Contractor.

b. The Village may refuse to make payment of the full amount recommended by the Architect because claims have been made against the Village on account of the Contractor's performance of the Work or Liens have been filed in connection with the Work or there are other items entitling the Village to a credit against the amount recommended, but the Village must give the Contractor written notice within seven (7) days (with a copy to the Architect) stating the reasons for such action.

15.6 Partial Utilization.

a. The Village shall have the right to utilize or place into service any item of equipment or other usable portion of the Work prior to completion of the Work. Whenever the Village plans to exercise said right, the Contractor will be notified in writing by the Village, identifying the specific portion or portions of the Work to be so utilized or otherwise placed into service.

_____ Village

_____ Contractor

b. It shall be understood by the Contractor that until such written notification is issued, all responsibility for care and maintenance of all items or portions of the Work to be partially utilized shall be borne by the Contractor. Upon issuance of said written notice of partial utilization, the Village will accept responsibility for the protection and maintenance of all such items or portions of the Work described in the written notice.

c. The Contractor shall retain full responsibility for satisfactory completion of the Work, regardless of whether a portion thereof has been partially utilized by the Village and the Contractor's one year correction period shall commence only after the date of Substantial Completion for the Work.

15.7 Substantial Completion. When the Contractor considers the Work ready for its intended use the Contractor shall notify the Village and the Architect in writing that the Work is substantially complete and request that the Architect prepare a Certificate of Substantial Completion/Notice of Completion. Within a reasonable time thereafter, the Village, the Contractor, and the Architect shall make an inspection of the Work to determine the status of completion. If the Architect does not consider the Work substantially complete, the Architect will notify the Contractor in writing giving the reasons therefore. If the Architect considers the Work substantially complete, the Architect will prepare and deliver to the Village for its execution and recordation the Certificate of Substantial Completion/Notice of Completion signed by the Architect and Contractor, which shall fix the date of Substantial Completion. As applicable, there shall be attached to the Certificate/Notice a list of items to be completed or corrected before final payment.

15.8 Final Application For Payment. After the Contractor has completed all correction Work referred to in Section 17 and delivered all maintenance and operating instructions, schedules, guarantees, Bonds, certificates of inspection, marked-up record documents (as provided in this Agreement) and other documents, all as required by the Contract Documents, and after the Architect has indicated that the Work is acceptable, the Contractor may make application for final payment following the procedure for progress payments. The final Application for Payment shall be accompanied by all documentation called for in the Contract Documents, together with complete and legally effective releases or waivers (satisfactory to the Village) of all liens arising out of or filed in connection with the Work.

15.9 Final Payment And Acceptance

a. If, on the basis of the Architect's observation of the Work during construction and final inspection, and the Architect's review of the final Application for Payment and accompanying documentation, all as required by the Contract Documents, the Architect is satisfied that the Work has been completed and the Contractor's other obligations under the Contract Documents have been fulfilled, the Architect will, within fourteen (14) days after receipt of the final Application for Payment, indicate in writing the Architect's recommendation of payment and present the Application to the Village for payment.

b. After acceptance of the Work by the Village's governing body, the Village will make final payment to the Contractor of the amount remaining after deducting all prior payments and all amounts to be kept or retained under the provisions of the Contract Documents, including the following items:

1. Liquidated damages, as applicable. If awarded this contract the Contractor will Substantially Complete the work within 60 working days from the date of the notice to proceed. Time for completion of the work shall be considered as the essence of this contract, and shall be subject to liquidated damages for delays at $100.00, per day. The Liquidated Damages award shall apply for the base bid, with full completion of the entire scope of work.

2. Two times the value of outstanding items of correction Work or punch list items indicated on the Certificate of Substantial Completion/Notice of Completion as being yet uncompleted or uncorrected, as applicable. All such Work shall be completed or corrected to the satisfaction of the Village within the time stated on the Certificate of Substantial Completion/Notice of Completion, otherwise the Contractor does

_____ Village

_____Contractor

hereby waive any and all claims to all monies withheld by the Village to cover the value of all such uncompleted or uncorrected items.

15.10 Release Of Retainage And Other Deductions

a. After executing the necessary documents to initiate the lien period, and not more than forty-five (45) days thereafter (based on a 30-day lien filing period and 15-day processing time), the Village will release to the Contractor the retainage funds withheld pursuant to the Agreement, less any deductions to cover pending claims against the Village pursuant to Section 17.

b. After filing of the necessary documents to initiate the lien period, the Contractor shall have thirty (30) days to complete any outstanding items of correction Work remaining to be completed or corrected as listed on a final punch list made a part of the Certificate of Substantial Completion/Notice of Completion. Upon expiration of the 45 days, referred to in Section 17, the amounts withheld pursuant to the provisions of Section 16 herein, for all remaining Work items will be returned to the Contractor; provided, that said Work has been completed or corrected to the satisfaction of the Village within said thirty (30) days. Otherwise, the Contractor does hereby waive any and all claims for all monies withheld by the Village under the Contract to cover two (2) times the value of such remaining uncompleted or uncorrected items.

15.11 Contractor's Continuing Obligation. The Contractor's obligation to perform and complete the Work in accordance with the Contract Documents shall be absolute. Neither recommendation of any progress or final payment by the Architect, nor the issuance of a Certificate of Substantial Completion/Notice of Completion, nor any payment by the Village to the Contractor under the Contract Documents, nor any use or occupancy of the Work or any part thereof by the Village, nor any act of acceptance by the Village nor any failure to do so, nor any review of a Shop Drawing or sample submittal, will constitute an acceptance of Work not in accordance with the Contract Documents or a release of the Contractor's obligation to perform the Work in accordance with the Contract Documents.

15.12 Final Payment Terminates Liability Of Village. Final payment is defined as the last progress payment made to the Contractor for earned funds, less retainage as applicable, less deductions listed in Section 17 herein. The acceptance by the Contractor of the final payment referred to in Section 17 herein, shall be a release of the Village and its agents from all claims of liability to the Contractor for anything done or furnished for, or relating to, the Work or for any act or neglect of the Village or of any person relating to or affecting the Work, except demands against the Village for the remainder, if any, of the amounts kept or retained under the provisions of Section 17 herein; and excepting pending, unresolved claims filed prior to the date of the Certificate of Substantial Completion/Notice of Completion.

_____ Village

_____ Contractor

SECTION 16. SUSPENSION OF WORK AND TERMINATION - MODIFICATIONS – CHANGE ORDERS

16.1 The Village may, at any time, by written change order make changes to the scope of work, and to the means and methods of performing the work. The Village may order temporary stoppage of the work or delay in performance that does not alter the scope of work. Changes, including any increase or decrease in the amount of the Contractor's compensation, shall be incorporated in written amendments to this contract.

16.2 If any change causes an increase or decrease in the price charged, the maximum amount of the contract, or the time required for performance of any part of the work under this contract, or otherwise affects the conditions of this contract, the Village shall make an equitable adjustment to the maximum amount, the price(s), the delivery schedule, or other affected terms, and shall modify the contract with a written change order.

16.3 Change orders, if applicable, may be priced, at a maximum of 10% markup on materials, services and labor related to the change order. Documentation of pricing will be required.

SECTION 17. TERMINATION FOR DEFAULT

17.1 The Village may terminate this contract, in whole or in part, when the Village determines, in its sole and absolute discretion that the Contractor is not making sufficient progress thereby endangering ultimate contract performance, or is not materially complying with any term or provision of this Contract.

17.2 Unless the Contractor's breach is waived by the Village in writing, the Village may, by written notice to the Contractor, terminate this contract upon no less than 30 day notice.

17.3 Waiver of breach of any provision of this contract shall not be deemed to be a waiver of any other breach and shall not be construed to be a modification of the terms of this contract. The provisions herein do not limit the Village's right to legal or equitable remedies.

17.4 Termination shall be effective as of the end of the notice period in the case of any uncured material breach.

17.5 The Village shall have no liability to the Contractor for future profits or losses in the event of termination for default.

17.6 The rights and remedies of the Village provided in this provision shall not be exclusive and are in addition to any other rights and remedies provided by law or under this contract.

17.7 Should Contractor provide the Village with written notice of cancellation of contract, Contractor will be required to refund a pro-rata share of the compensation identified in this agreement.

17.8 In accordance with section 2-8.4.1, of the Miami-Dade County Code, any individual or corporation or other entity that attempts to meet its contractual obligations with the Village or County through fraud, misrepresentation or material misstatements shall have its Contract terminated, whenever practicable, as determined by Village. The Village may terminate or cancel any other contracts which such individual or other subcontracted entity has with the County. Such individual or entity shall be responsible for all direct and indirect costs associated with such termination or cancellation, including attorney's fees. The foregoing notwithstanding, any individual or entity who attempts to meet its contractual obligations with the Village or County through fraud, misrepresentation or material misstatement may be disbarred from contracting for up to five (5) years.

17.9 If termination occurs, the Contractor will be paid for allowable costs incurred in carrying out activities required by this contract up to the date and time of termination.

_____ Village

_____ Contractor

SECTION 18.TERMINATION FOR DELAY

18.1 If the project is suspended or the Contractor's services are delayed by the Village for more than 30 consecutive days, the Contractor may terminate this contract by giving not less than 10 days written notice.

18.2 The liability of the Village upon termination by the Contractor for suspension or delay of the project shall be for the value of services performed pursuant to the schedule contained in the statement of work rendered by Contractor to the time of termination by Contractor. The Village shall not be liable for future profits or losses.

SECTION 19. SUSPENSION OF WORK BY VILLAGE. The Village, acting through the Architect, may, at any time and without cause, suspend the Work or any portion thereof for a period of not more than ninety (90) days by notice in writing to the Contractor. The Contractor shall resume the Work on receipt from the Architect of a notice of resumption of Work. The Contractor shall be allowed an increase in the Contract Price or an extension of the Contract Time, or both, directly attributable to any suspension if the Contractor makes an approved claim therefore as provided in this agreement.

SECTION 20. TERMINATION OF AGREEMENT BY VILLAGE (CONTRACTOR DEFAULT)

a. In the event of default by the Contractor, the Village may give ten (10) days written notice to the Contractor of Village's intent to terminate the Agreement and provide the Contractor an opportunity to remedy the conditions constituting the default. It shall be considered a default by the Contractor whenever Contractor shall: (1) declare bankruptcy, become insolvent, or assign its assets for the benefit of its creditors; (2) fail to provide materials or workmanship meeting the requirements of the Contract Documents; (3) disregard or violate provisions of the Contract Documents or Architect's instructions; (4) fail to prosecute the Work according to the approved progress schedule; or, (5) fail to provide a qualified superintendent, competent workmen, or materials or equipment meeting the requirements of the Contract Documents. If the Contractor fails to remedy the conditions constituting default within the time allowed, the Village may then issue the Notice of Termination.

b. In the event the Agreement is terminated in accordance with the provisions herein, the Village may take possession of the Work and may complete the Work by whatever method or means the Village may select. The cost of completing the Work shall be deducted from the balance which would have been due the Contractor had the Agreement not been terminated and the Work completed in accordance with the Contract Documents. If such cost exceeds the balance which would have been due, the Contractor shall pay the excess amount to the Village. If such cost is less than the balance which would have been due, the Contractor shall not have claim to the difference.

SECTION 21. TERMINATION OF AGREEMENT BY Village (FOR CONVENIENCE). The Village may terminate the Agreement at any time if it is found that reasons beyond the control of either the Village or Contractor make it impossible or against the Village's interests to complete the Work. In such a case, the Contractor shall have no claims against the Village except: (1) for the value of Work performed up to the date the Agreement is terminated; and, (2) for the cost of materials and equipment on hand, in transit, or on definite commitment, as of the date the Agreement is terminated, which would be needed in the Work and which meet the requirements of the Contract Documents. The value of Work performed and the cost of materials and equipment delivered to the site, as mentioned above, shall be determined by the Architect in accordance with the procedure prescribed for the making of the final application for payment and payment under this agreement.

SECTION 22. TERMINATION OF AGREEMENT BY CONTRACTOR The Contractor may terminate the Agreement upon ten (10) days written notice to the Village, whenever: (1) the Work has been suspended under the provisions of this agreement for more than ninety (90) consecutive days through no fault or negligence of the Contractor, and notice to resume Work or to terminate the Agreement has not been received from the Village within this time period; or, (2) the Village should fail to pay the Contractor any monies due him in accordance with the

terms of the Contract Documents and within 60 days after presentation to the Village by the Contractor of a request therefore, unless within said 10-day period the Village shall have remedied the condition upon which the payment delay was based. In the event of such termination, the Contractor shall have no claims against the Village except for those claims specifically enumerated in Section 15.3, herein, and as determined in accordance with the requirements of said Section.

SECTION 23.TERMINATION FOR LACK OF FUNDS

23.1 Not withstanding any other provisions of the contract, if the funds anticipated by the Village for the for the payment of work under this contract are at any time not forthcoming, through the failure of the Village to appropriate funds, the failure of Miami-Dade County, the Florida Legislature, or the U.S. Congress to appropriate funds, or the refusal of the administrative branch of the federal or county government to release funds, or due to any other reason for the unavailability of funds in succeeding fiscal years, or the discontinuance or material alteration of the program under which funds are to be provided, the Village shall have the right to terminate the contract without penalty by giving not less than 30 day written notification of the lack of available funding to the Contractor. The Village shall be the final authority to determine whether of not funds are available. The Village may at its discretion terminate, renegotiate and/or adjust the contract award, whichever is in the best interest of Village. Upon receipt of such notice, the Contractor shall not in

23.2 For any portion of the work that is funded by county, state, local, or federal appropriations or grants, the liability of the Village to Contractor shall be limited to payment for services when payment is received by the Village from the county, state, local, or federal authority. The Village shall submit all required documents requesting payment within a reasonable time, seven (7) working days. The Village shall not be liable to Contractor for work performed in the event that payment is not received by the Village from a county, state, local, or federal funding Village. This is a pay-when-paid clause.

SECTION 24.NO DAMAGES FOR DELAY CLAUSE

24.1 No claim for damages or any claim other than for an extension of time shall be made or asserted against the Village by reason of any weather related delays. The Contractor shall not be entitled to an increase in the contract sum or payment of compensation of any kind from the Village for direct, indirect, consequential, impact, mobilization, demobilization, or other costs, expenses or damages, including, but not limited to, costs of acceleration or inefficiency, arising because of delay, disruption, interference or hindrance from any cause whatsoever; provided, however, that this provision shall not preclude recovery or damages by the Contractor for hindrances or delays due solely to fraud, bad faith or active interference on the part of the Village or its agents. Otherwise, the Contractor shall be entitled only to extension of the contract time as the sole and exclusive remedy for a resulting delay, in accordance with and to the extent specifically provided above

24.2 Contractor shall not be considered in violation of this contract due to temporary delays due to major weather events, including tropical storms, depressions, severe rain, strong winds, hurricanes, etc. However, Contractor shall attempt to provide prior notice to the Village's contact person of any such weather related delays, and shall immediately proceed with services after such weather related events. Immediately proceed shall mean within 48 hours of such weather event.

SECTION 25. TITLE/OWNERSHIP TO MATERIALS FOUND ON THE WORK. The Village reserves the right to retain title to all soils, stone, sand, gravel, and other materials developed and obtained from excavations and other operations connected with the Work until released by the Village. Any material desired to be retained by the Village shall be delivered by the Contractor to a designed area within a six (6) mile radius of the project, at no extra cost to the Village, as directed by the Village, unless otherwise specified in the Contract Documents. Neither the Contractor nor any subcontractor shall have any right, title, or interest in or to any such materials. The Contractor will be permitted to use in the Work, if approved by the Village and Architect in writing, without charge, any such materials which meet the requirements of the Contract Documents. Once the Village releases ownership of the

material, it shall become the property of the Contractor, who shall dispose of it in manner satisfactorily to the Architect, as provided for by the Contractor, at no extra cost to the Village.

SECTION 26. RIGHT TO AUDIT. If the Contractor submits a claim to the Village for additional compensation, the Village shall have the right, as a condition to considering the claim, and as a basis for evaluation of the claim, and until the claim has been settled, to audit the Contractor's books to the extent they are relevant. This right shall include the right to examine books, records, documents, and other evidence and accounting procedures and practices, sufficient to discover and verify all direct and indirect costs of whatever nature claimed to have been incurred or anticipated to be incurred and for which the claim has been submitted. The right to audit shall include the right to inspect the Contractor's plants, or such parts thereof, as may be or have been engaged in the performance of the Work. The Contractor further agrees that the right to audit encompasses all subcontracts and is binding upon subcontractors. The rights to examine and inspect herein provided for shall be exercisable through such representatives as the Village deems desirable during the Contractor's normal business hours at the office of the Contractor. The Contractor shall make available to the Village for auditing, all relevant accounting records and documents, and other financial data, and upon request, shall submit true copies of requested records to the Village.

SECTION 27. JURISDICTION AND VENUE. For the purposes of this contract, Florida law shall govern the terms of this contract. Venue shall be in Miami-Dade County, Florida.

SECTION 28. SOVEREIGN IMMUNITY AND ATTORNEY'S FEES. The Village does not waive sovereign immunity under 768.28, Florida Statutes, for any claim for breach of contract or for an award of prejudgment interest; provided, however, that in any action arising out of or to enforce this contract, the prevailing party shall be entitled to its reasonable attorney's fees and costs in any state or federal administrative, circuit court and appellate court proceedings. In the event of any litigation arising out of this agreement or project agreement, each party hereby knowingly, irrevocably, voluntarily, and intentionally waives its right to trial by jury.

SECTION 29.NOTICES All notices given or required under this contract shall be deemed sufficient if sent by certified mail, return receipt requested, to the addresses of the Contractor and to the Village specified in this contract, unless either party shall specify to the other party a different address for the giving of the notices. Additionally, whenever any provision of the Contract Documents requires the giving of written notice, it will be deemed to have been validly given if delivered in person to the individual or to a member of the firm or to an officer of the corporation for whom it is intended, or if delivered at or sent by registered or certified mail, postage prepaid, to the last business address known to the giver of the notice.

SECTION 30. CONTRACTING OFFICER REPRESENTATION. For the purposes of this contract, the contracting officers are as follows:

To the Village: Ron E. Williams, Village Manager
Village of Palmetto Bay
9705 East Hibiscus Street
Palmetto Bay, Florida 33157

To Contractor: Mr. Trimmer Dettor, Secretary
Fast-Dry Courts, Inc.
1400 NW 13 Avenue
Pompano Beach, FL 33069

_____ Village

_____Contractor

An individual or delegated committee will be designated to represent the Village in all matters pertaining to the work as it progresses. Interference by unauthorized individuals must be controlled so as no to impede the smooth progress of the work. Contractor shall review all work to be accomplished with project representative to preclude misunderstandings.

SECTION 31. RECORD RETENTION AND AUDITS. Contractor shall comply with Chapter 119, Florida Statutes, and public record retention requirements and shall maintain a copy of all documents reflecting services rendered to Village for five (5) years after the termination of this Agreement, close out, and/or final payment has been made and all other pending matters are closed. Further, Contractor shall be provided access to Village, to any government authority, or any other person pursuant to a public records request, to any books, documents, papers, and records which are directly pertinent to this Agreement for the purpose of making audit, examination, excerpts and transcriptions. The Contractor agrees to include in first-tier subcontracts approved under this contract a clause substantially the same as that of this provision. The right to access and examination of records provided herein shall continue until disposition of any mediation, claims, litigation or appeals. The Contractor shall maintain accounts and records, including, but not limited to, personnel, property, and financial records, adequate to identify and account for all costs pertaining to the Contract and such other records as may be deemed necessary by Village to assure proper accounting for all project funds.

SECTION 32. WARRANTIES.

32.1 Contractor warrants that it: (a) is duly licensed by the State of Florida and Miami-Dade County to provide services identified herein; (b) has not provided a commission, bonus or other benefit or payment to any person to procure this contract other than paying the salaries of employees in the ordinary course of business; (c) has not committed a violation of a public entity crime statute and is not otherwise disqualified by the State of Florida from entering into this Agreement; (d) no member or delegate to the U.S. Congress or Resident Commissioner shall be admitted to any share or part of this contract or to any benefit to arise there from; (e) no member, officer, or employee of the Village shall or for one (1) year after current tenure, have any interest, direct or indirect, in this contract; (f) proceeds shall not be used to influence federal legislation as defined in 31 USC 9101(1); (g) Contractor shall warrant all labor and parts for a period of one year from completion; and (h) any manufacturer's warranties shall also be provided to Village, as applicable. Contractor shall provide a Public Entity Crime Affidavit to the Village Manager upon executing this contract (included in Exhibit 5).

32.2 Contractor will meet the requirements of any manufacturer's labor and material warranty according to specifications submitted by any manufacturer with this proposal and secure warranty for Village upon completion and payment in full, as these specifications pertain to Contractor.

32.3 Contractor shall provide a one (1) year guarantee against defects in materials or work upon completion of installation, as applicable. Any materials or work which is or becomes defective during the guarantee period shall be replaced by the Contractor with the understanding that all replacements shall carry the same guarantee as the original equipment. Such replacement shall be made immediately upon receiving notification from the Village or its representatives.

32.4 The Contractor shall guarantee that the materials and workmanship of the apparatus installed or rehabilitated by the Contractor under this agreement shall be "first class" in every respect and that Contractor shall make good any defects not due to ordinary wear and tear or improper use, which may develop within one year of the date of final acceptance and final inspection of all equipment. Neither the final payment nor any provision of the agreement shall relieve the Contractor of the extent and period provided by law and upon written notice Contractor shall remedy any defects due thereto and pay all expenses for any damage to other work resulting there from. The same guarantee shall be applicable to the total job in the event equipment is reused or modified. The one-year guarantee for all windows shall start from the date of final acceptance of the complete job.

_____ Village

_____ Contractor

SECTION 33. OWNERSHIP OF DOCUMENTS. All documents, reports, plans, specifications or other records, including electronic records, resulting from the professional services rendered by the Contractor under the Contract Document shall be deemed the property of the Village and the Village shall have all rights incident to this ownership. The Contractor acknowledges that all documents prepared under this contract shall be public records, and shall be subject to public inspection and copying, as provided by Florida Statutes Chapter 119. Upon conclusion of this contract and any extensions, all documents shall be delivered by the Contractor to the Village. The Contractor shall have the right to retain copies of the documents at the Contractor's expense.

SECTION 34. SEVERABILITY. Should any section or any part of any section of this contract be rendered void, invalid or unenforceable by any court of law, for any reason, the determination shall not render void, invalid or unenforceable any other section or part of any section of this contract.

SECTION 35. ENTIRE CONTRACT. The contract, when signed by all of the parties, constitutes the full and complete understanding and contract of all parties and may not be in any manner interpreted or fulfilled in contradiction of its express terms. This contract and the incorporated attachments constitute the entire understanding between the parties and integrates by its terms all previous contracts or understandings, oral or written, between the parties. In the event of any conflict, the terms of this contract will govern over the provisions of any incorporated documents. Headings are for convenience of reference only and shall not be considered in any interpretation of this agreement. Each Exhibit referred to in this agreement forms an essential part of this agreement. The Exhibits if not physically attached, should be treated as part of this agreement, and are incorporated by reference. This agreement may be executed in several counterparts, each of which shall be deemed an original and such counterparts shall constitute one and the same instrument.

SECTION 36. CONTINGENCY FEE AND CODE OF ETHICS WARRANTY

36.1 Contractor warrants that neither it, nor any principal, employee, agent, representative or family member has promised to pay, and Contractor has not, and will not, pay a fee the amount of which is contingent upon the Village awarding this contract to Contractor.

36.2 Contractor warrants that neither it, nor any principal, employee, agent, representative or family member has procured, or attempted to procure, this contract in violation of any of the provisions of the Miami-Dade County or the Village's conflict of interest and code of ethics ordinances. A violation of this section will result in the termination of the contract and forfeiture of funds paid, or to be paid, to the Contractor.

36.4 During the performance of the awarded contract, the successful Contractor agrees as follows:

a. The Contractor shall not discriminate against any employee or applicant for employment because of race, color, religion, sex, sexual orientation or national origin.
b. The Contractor shall take affirmative action to ensure that applicants are employed, and that employees are treated during employment, without regard to its race, color, religion, sex, sexual orientation or national origin. Such action shall include, but not be limited to, (1) employment, (2) upgrading, (3) demotion, (4) transfer, (5) recruitment or recruitment advertising, (6) layoff or termination, (7) rates of pay or other forms of compensation, and (8) selection for training, including apprenticeship.
c. The Contractor shall post in conspicuous places available to employees and applicants for employment the notices to be provided by the contracting officer that explain this clause.
d. The Contractor shall, in all solicitations or advertisements for employees placed by or on behalf of the Contractor, state that all qualified applicants will receive consideration for employment without regard to race, color, religion, sex, sexual orientation or national origin.
e. The Contractor shall send, to each labor union or representative of workers with which it has a collective bargaining contract or other contract or understanding, the notice to be provided by the contracting officer

_____ Village

_____Contractor

advising the labor union or workers' representatives of the Contractor's commitments under this clause, and post copies of the notice in conspicuous places available to employees and applicants for employment.
f. The Contractor shall comply with Executive Order 11246, as amended, and the rules, regulations, and/orders of the Secretary of Labor.
g. The Contractor shall furnish all information and reports required by Executive Order 11246, as amended and by rules, regulations, and/orders of the Secretary of Labor. The Contractor shall permit access to its books, records, and accounts by the Secretary of Labor for purposes of investigation to ascertain compliance with the rules, regulations, and/orders.
h. In the event of a determination that the Contractor is not in compliance with this clause or any rule, regulation, or order of the Secretary of Labor, this contract may be canceled, terminated, or suspended in whole or in part, and the Contractor may be declared ineligible for further Governmental contracts, or federally assisted construction contracts under the procedures authorized in Executive Order 11246, as amended, the rules, regulations, and/orders of the Secretary of Labor, or as otherwise provided by law.
i. The Contractor shall include the terms and conditions of this clause in every subcontract or purchase order unless exempted by the rules, regulations, or orders of the Secretary of Labor issued under Executive Order 11246, as amended, so that these terms and conditions will be binding upon each subcontractor or vendor. The Contractor shall take the action with respect to any subcontract or purchase orders as the Department of Labor may direct as a means of enforcing the provisions, including sanctions for noncompliance; provided that if the Contractor becomes involved in, or is threatened with, litigation with a subcontractor or vendor as a result of the direction, the Contractor may request the United States to enter into the litigation to protect the interests of the United States.

36.5 Contractor and its associates covenant that they have no interest and will not acquire any interest, direct or indirect, which would conflict in any manner or degree with the performance of services required to be performed under this contract. Contractor is to comply with the Copeland "Anti-Kickback" Act (18 U.S.C. 874), as supplemented in Department of Labor Regulations (29 CFR Part 3).

36.7 No member, officer or employee of Village, or its designees or agents, no member of the governing body of the locality or localities who exercise any functions or responsibilities with respect to the program during his tenure or for one (1) year thereafter, shall have any interest, direct or indirect in any contract or subcontract, or the proceeds thereof, for work to be performed in connection with the program assisted under the Contract.

SECTION 37. WARRANTY OF AUTHORITY. The signatories to this contract warrant that they are duly authorized by action of their respective Village commission, board of directors or other Village to execute this contract and to bind the parties to the promises, terms, conditions and warranties contained in this contract.

SECTION 38. MISCELLANEOUS PROVISION. In the event a court must interpret any word or provision of this agreement, the word or provision shall not be construed against either party by reason of drafting or negotiating this agreement.

SECTION 39. PERFORMANCE BOND.

39.1 Within ten (10) business days after its acceptance of the terms and conditions of this agreement, the Contractor shall file with the Village clerk, a bond in the amount of the contract having as a surety a company qualified to do business in the State of Florida and reasonably acceptable to the Village (the "performance bond"). The performance bond shall secure the full and faithful performance by the Contractor of all requirements, duties, and obligations imposed upon the Contractor by the provisions of this agreement. The performance bond shall provide that the surety shall give sixty (60) days prior written notice of any cancellation thereof to the Village. The Contractor shall cause the performance bond to be renewed or replaced and in effect at all times throughout the term of this agreement.

_____ Village

_____Contractor

39.2 Upon the request of the Village in connection with any construction or installation of facilities under this agreement in which the cost exceeds $50,000, and prior to the issuance of any permits therefore, the Contractor shall file with the Village clerk prior to the construction or installation, a bond in an amount equal to the projected cost of the construction having as a surety a company qualified to do business in the State of Florida and reasonably acceptable to the Village (the "construction bond"). The construction bond shall be conditioned on the completion of the applicable construction of facilities by the Contractor in compliance with all applicable permits, laws, rules, and regulations. The construction bond shall provide that the surety shall give sixty (60) days prior written notice of any cancellation thereof to the Village. Upon Contractor's written request, the Village shall release each such construction bond twelve (12) months after the completion of the applicable construction and restoration in compliance with all applicable permits, laws, rules, and regulations.

39.3Recovery by the Village under a performance bond, construction bond or under insurance shall not limit the Contractor's indemnification obligations set firth in this agreement with respect to its construction, maintenance, and operations, provided that the Village shall not be entitled to double recovery. Recovery by the Village under either a bond or insurance is in addition to all other rights of the Village, whether specified in this agreement or authorized by law, provided that the Village shall not be entitled to double recovery. If a performance bond or construction bond required by this agreement and previously approved by the Village is suspended, voided, or cancelled and not replaced, then the occurrence shall be a violation of this agreement, subject to the notice and cure periods and remedies provided in this agreement.

SECTION 40. ADDITIONAL BOND. It is further mutually agreed between the parties hereto that if, at any time after the execution of this Agreement and the Performance and Payment Bonds, which bonds shall be guaranteed for a 100% of the construction cost price, hereto attached for its faithful performance, the Village shall deem the surety or sureties upon such bonds to be unsatisfactory, or if, for any reason, such bond(s) ceases to be adequate to cover the performance of the work, the Contractor shall at his/her expense, and within three (3) days after the receipt of Notice from the Village to do so, furnish an additional bond or bonds, in such a form and amount, and with such sureties as shall be satisfactory to the Village. In such event, no further payment to the Village shall be deemed due under this Agreement until such new or additional security for the faithful performance of the work shall be furnished in the manner and form satisfactory to the Village.

[SIGNATURE PAGE TO FOLLOW]

_____ Village

_____Contractor

IN WITNESS WHEREOF, the parties execute this agreement on the respective dates under each signature: The Village, signing by and through its Village manager, attested to by its Village clerk, duly authorized to execute same and by Contractor by and through its president, whose representative has been duly authorized to execute same through a resolution of the corporation or partnership.

Village of Palmetto Bay

By: _____
Ron E. Williams, Village Manager

Contractor

By: _____
Mr. Trimmer Dettor

Approved as to form:

By: _____
Eve A. Boutsis,
Village Attorney

_____ Village

_____ Contractor

CHANGE ORDER

TO : Village Of Palmetto Bay
Project: Coral Reef Park Tennis/Racquetball Courts Resurfacing Project Bid 2013-PR-05

Contractor: _____
Date:_____

This Change Order will authorize the following change to the Contract:

The Work as set forth in the Contract is hereby amended to include the items set forth on Exhibit "A" attached hereto and by this reference made a part hereof.

This change Order constitutes full, final and complete compensation to the Contractor for all costs, expenses, overhead, and profit and any damages of every kind that the Contractor may incur in connection with the above referenced changes in the Work, and any other effect on any of the Work under this Contract. The Contractor acknowledges and agrees that (a) the Guaranteed Maximum Price of $_____ under the Contract will be [unchanged] [changed] by this Change Order; and (b) the schedule for performance of work will be [unchanged] [changed] by this Change Order. Contractor expressly waives any claims for any additional compensation, damages or time extension in connection with the above-referenced changes. Except as herein or heretofore expressly modified, all terms of the Contract shall remain in full force and effect and shall cover the performance of, and payment for, any work authorized hereunder. Any defined terms not defined in this Change Order shall have the meanings set forth in the Contract.

By signing below the parties indicate acceptance of this Change Order as set forth herein.

VILLAGE	CONTRACTOR
By:_____	By:_____
Name: _____	Name: _____
Title: _____	Title:_ _____

_____ Village

_____Contractor

To: Honorable Mayor and Village Council

Date: August 30, 2013

From: Ron E. Williams, Village Manager

Re: Recommendation for Approval Award of RFP- 2013-PR-002

A RESOLUTION OF THE MAYOR AND VILLAGE COUNCIL OF THE VILLAGE OF PALMETTO BAY, FLORIDA, RELATING TO PARKS AND RECREATION; APPROVING THE VILLAGE MANAGER'S RECOMMENDATION OF TIP TOP ENTERPRISES INC. AS THE MOST RESPONSIVE BIDDER FOR THE LANDSCAPE/GROUNDS MAINTENANCE SERVICES; AND, FURTHER AUTHORIZING THE VILLAGE MANAGER TO EXECUTE THE CONTRACT FOR SERVICES UNDER RFP-2013-PR-002 TO TIP TOP ENTERPRISES INC., FOR THE LANDSCAPE/GROUND MAINTENANCE SERVICES AT A COST OF $71,250; PROVIDING AN EFFECTIVE DATE.

BACKGROUND AND ANALYSIS:
Following a voluntary termination of landscape maintenance services from the Village's previous vendor, RFP 2013-PR-002 was issued in quest of re-establishing the needed grounds maintenance services for Village parks. Landscape maintenance was defined as mowing, edging, trimming/weed-eating and weed/leaf control at designated frequencies throughout the year.

Pursuant to receipt of proposals received for RFP No. 2013-PR-002, an analysis was conducted by an evaluation committee as selected by the Village Manager. The proposal proffered by Tip Top Enterprises, Inc. was found to be complete with all required documentation; as well as being the lowest cost-of-services offered.

In July 2013, pursuant to Resolution No. 2013-59, the Village Council authorized the Village Manager to enter into contract negotiations with Tip Top Enterprises Inc., which resulted in both parties agreeing to all terms and conditions and a final contract cost of $71,250. The negotiated agreement is now back before the Village Council for formal review and ratification.

FISCAL IMPACT: Funding available as authorized in the FY 2012-2013 and FY 2013-2014 Annual Budget.

RECOMMENDATION: Approval.

RESOLUTION NO. _____

A RESOLUTION OF THE MAYOR AND VILLAGE COUNCIL OF THE VILLAGE OF PALMETTO BAY, FLORIDA, RELATING TO PARKS AND RECREATION; APPROVING THE VILLAGE MANAGER'S RECOMMENDATION OF TIP TOP ENTERPRISES INC. AS THE MOST RESPONSIVE BIDDER FOR THE LANDSCAPE/GROUNDS MAINTENANCE SERVICES; AND, FURTHER AUTHORIZING THE VILLAGE MANAGER TO EXECUTE THE CONTRACT FOR SERVICES UNDER RFP-2013-PR-002 TO TIP TOP ENTERPRISES INC., FOR THE LANDSCAPE/GROUND MAINTENANCE SERVICES AT A COST OF $71,250; PROVIDING AN EFFECTIVE DATE.

WHEREAS, in an effort to re-established permanent landscape maintenance services for Village parks, RFP-2013-PR-002 was prepared and issued in accordance with procurement policies; and

WHEREAS, an evaluation committee met on June 26th, 2013 to discuss and rank all proposals received, and recommended Tip Top Enterprises, Inc., as the most responsive and qualified proposer meriting negotiations with the Village Manager and subsequent award of contract; and

WHEREAS, the Mayor and Council authorized the Village Manager to enter into said contract negotiations with Tip Top Enterprises, Inc., regarding Landscape/Ground Maintenance services pursuant to RFP-2013-PR-002 on July 11, 2013 via resolution no. 2013-59; and

WHEREAS, the subject negotiations, as authorized by Resolution 2013-59, resulted in agreement of a governing contract at a cost of $71,250; and,

WHEREAS, have been identified and approved in the FY2012-2013 Annual Budget and; and,

WHEREAS, the Mayor and Council are recommended by the Village Manager to approve the contract with Tip Top Enterprises, Inc., for Landscape/Grounds Maintenance services as specified in RFP- PR-2013-002; at a cost of $71,250 and pursuant to the terms and conditions provided in the agreed upon proposed contract.

NOW, THEREFORE, BE IT RESOLVED BY THE MAYOR AND VILLAGE COUNCIL OF THE VILLAGE OF PALMETTO BAY, FLORIDA, AS FOLLOWS:

Section 1. The Village Council hereby approves the contract for Landscape/Grounds Maintenance services to Tip Top Enterprises, Inc., at a cost of $71,250, as provided in the contract attached hereto as exhibit 1,

Section 2. The Village Manager is hereby authorized to enter into agreement with Tip Top Enterprises, Inc.; pursuant to agreed upon terms and conditions and at a cost of $71,250, for Landscape/Grounds Maintenance services.

Section 3. .This resolution shall take effect immediately upon adoption.

PASSED AND ADOPTED this _____ day of September, 2013.

Attest: _____
Meighan J. Alexander
Village Clerk

_____
Shelley Stanczyk
Mayor

APPROVED AS TO FORM:

_____
Eve A. Boutsis
Village Attorney

FINAL VOTE AT ADOPTION:

Council Member Patrick Fiore _____

Council Member Tim Schaffer _____

Council Member Joan Lindsay _____

Vice-Mayor John Dubois _____

Mayor Shelley Stanczyk. _____

AGREEMENT BETWEEN THE VILLAGE OF PALMETTO BAY AND TIP TOP ENTERPRISES, INC., FOR LANDSCAPE/GROUNDS MAINTENANCE

THIS AGREEMENT is made and entered into this _____ day of _____, 2013, by and between the Village of Palmetto Bay, a Florida municipal corporation (the "Village"), and Tip Top Enterprises, Inc ("Contractor/Proposer").

RECITALS

1. The Village has under its control five (5) parks in which a myriad of activities occur, including special events, rental functions and self-directed activity such as walking and exercising; all of which require a safely maintained and aesthetically pleasing environment in which to recreate.

2. The Village desires to obtain landscape/grounds maintenance services to maintain the parks in a pristine condition pursuant to the terms of this agreement.

NOW, THEREFORE, in consideration of $10.00, the mutual covenants and conditions contained herein, the receipt of which is acknowledged, the parties agree as follows:

PURPOSE/AUTHORIZATION

1. The purpose of this Agreement is to provide for the Village's retention of Contractor/Proposer to provide landscape/grounds maintenance services at various Village parks and/or Village facilities on a pre-scheduled basis and as described in Section 2 below.

2. **Scope of Services**

a. The Village grants to the Contractor/Proposer the non-exclusive right to provide landscape/grounds maintenance services at selected parks and/or facilities as contemplated herein. The Contractor shall adhere to established rules and conditions concerning landscape/grounds maintenance services at Village park facilities. Neglecting or intentionally failing to abide by these rules shall be grounds for contract termination.

b. The Contractor shall provide Landscape/Grounds Maintenance Services at Coral Reef Park, Palmetto Bay Park, Perrine Wayside Park, Ludovici Park and Thalatta Estate, as per specifications and frequencies which are designed to effectuate a level of consistency and aesthetically pleasing and usable parks agreed upon by the parties via work orders.

c. Contractor shall be licensed pursuant to requirements of the State of Florida, Miami-Dade County and Village of Palmetto Bay, and responsible for providing landscape/grounds maintenance services performed by qualified employees acceptable to the Village of Palmetto Bay. Duties shall include, but not necessarily limited to the mowing of grasses (with pick-up of any debris on grounds prior to mowing); edging; weed-eating/trimming; raking and disposal of leaves/debris; blowing; pruning shrubs; weed control; leaf control; maintaining written reports and/or logs as may be required; and responding to landscaping/grounds maintenance complaints/incidents/emergencies as they arise and investigate/remedy accordingly.

d. The Contractor shall provide the Village, with the bid, a copy of their occupational/business licenses. Contractor's certification as a Certified Landscape Professional (CLP) through the Professional Lawn Care Association of America (PLCAA) or similar certification is preferred. The Contractor warrants that the products and services supplied/performed to the Village shall conform in all respects to the standards set forth in the Occupational Safety and Health Act of 19780 (OSHA), as amended, and the failure to comply with this condition will be considered as a breach of contract. Any fines levied because of inadequacies to comply with these requirements shall be borne solely by the bidder responsible for same.

_____ Contractor
_____ Village

e. Contractor shall assign personnel that are to possess desirable qualities and knowledge to carry out specific tasks as delineated in the underlying RFP and to accomplish these specified services in such a manner as not to interfere with the normal conduct of the Village's business. Contractor shall hire personnel and train the personnel to ensure the Contractor can perform the services delineated in the RFP. Contractor shall instruct and require its personnel to perform the services specified herein in an orderly and efficient manner while enforcing the regulations of the Village with regards to safety and usability of facilities, and to accomplish these specified services in such a manner as not to interfere with the normal conduct of the Village's business. Contractor shall conduct and utilize personnel that have successfully passed a background investigation to include, but not limited to medical examination which includes drug screening; and free from any physical or emotional disorder handicap that would inhibit or preclude meeting the performance standards under this contract; all which shall be the financial responsibility of the Contractor. The Village may be provided access to personnel file(s) for review upon request of the Village to ensure that there is no violation of the Shannon Melendi Act by the employees/personnel of contractor. As required by state law, all personnel must be a Citizen of the United States of America, or an alien who has been lawfully admitted for permanent residence as evidenced by an Alien Registration Receipt Card Form I-151.

f. Contractor shall not assign personnel to the Village if they have currently or have in the past been involved in military conduct resulting in dishonorable or undesirable discharge; any pattern of irresponsible behavior, including but not limited to unreasonable driving or a problem employment record; or any criminal conviction (felony and misdemeanor). The Village reserves the right to request the reassignment of Contractor's personnel for any reason, at anytime during this contract term. The Village has a zero tolerance policy towards nonperformance of contracts; the use of alcohol, drugs or non-prescription medications which effect job performance; inability to communicate (both verbally and in writing); theft; and unprofessional conduct. Contractor's personnel are not to be accompanied in their work area or performance of their duties as delineated in the RFQ by acquaintances, family members or other persons.

g. The Contractor is required to provide training to all of its personnel assigned to provide services under the RFQ, including on-site training as may be necessary, in order that the Village be assured said personnel are capable of assuming the responsibilities of respective assignments. The costs of any and all training shall be considered as a part of the Contractor's operational expenses. Records of training shall be maintained in the respective Contractor personnel files as to those persons assigned to provide services to the Village.

h. Contractor shall provide a maintenance supervisor or lead person to have supervisory responsibility over all of the Contractor's personnel on duties for respective assignment. The Contractor shall designate a person the directly handled any situations which may arise regarding required maintenance and/or the performance of same.

i. Reserved.

j. The Village parks are open to the public between the hours of 7:00 a.m. to 7:00 p.m., or sunrise and sunset, which ever is earlier. As such all services by Contractor are to be conducted while the parks are open, or at a minimum 30 minutes before sundown' Monday through Friday. Work performed at any other hours will require prior written approval from the Village Manager or appointed designee.

k. . Uniforms/Equipment

i. Contractor is responsible for the appearance of all Contractor's personnel. It is the Village's understanding that Contractor has a uniform and grooming policy which requires all of Contractor's personnel to be well groomed and neatly uniformed while on-duty. Contractor advises that the uniforms supplied by Contractor shall include Contractor's name to easily identify Contractor's personnel assigned under the RFP. Contractor advises that all its personnel are required to wear protective eyewear and/or face guards to protect themselves from injury while performing services at Village parks.

ii. Contractor in bidding under the RFP understood as services are provided at the Village's public parks, and as the Village provided standards under the RFP as to the services sought, the Contractor and its personnel shall adhere to the standards delineated in the RFP. The Contractor shall not permit the use of any unauthorized equipment such as chemical

agents, concealed weapons/firearms, personal radios or other items not specifically delineated and authorized under the RFP and scope of services. Contractor and assigned personnel of Contractor shall adhere to all OSHA and state safety regulations.

iii. All equipment used by the Contractor is also to be kept clean, well-maintained and in safe operating conditions at all times; free from defects or wear which may constitute a hazard to any persons on Village property. The Contractor shall provide the Village a complete inventory of all Contractor owned landscape/grounds maintenance equipment to be utilized under the RFP proposal, that has been accepted. All equipment to be utilized must be aesthetically appropriate, be reliable, and utilized in a safe manner. The Village shall immediately notify Contractor of any equipment that is perceived to be defective, inappropriate, unreliable or unsafe. That equipment will not be utilized in Village parks. Village designated person may periodically inspect the sharpness of mover blades on equipment to be utilized in the Village Parks. Contractor agrees to cooperate accordingly an schedule sharpening upon Village request.

l. Facilities. Village currently has jurisdiction over five (5) parks and request scheduled landscape/grounds maintenance services at each with frequencies as designated by the Village. Said landscape/grounds maintenance services incorporates all areas of the park excluding designated areas noted below:

i. Coral Reef Park: 7895 SW 152 Street, Palmetto Bay; total acreage = 53
Approximate acreage to be maintained = 35
(20 acres Common Area; 15 acres Athletic Fields)

- Excludes trimming of any shrubbery within the Ken Robinson Meditation Garden
- Excludes any areas within the Pineland Preserve
- Excludes three (3) athletic fields unless authorized under optional services

ii. Palmetto Bay Park: 17535 SW 95 Avenue, Palmetto Bay: total acreage = 25
Approximate acreage to be maintained = 15

- excludes six (6) ball fields (within fence lines) unless authorized under optional services

iii. Perrine Wayside Park: 16425 South Dixie Highway: total acreage = 2.5
Approximate acreage to be maintained = 2.5

- exclusions: none

iv. Ludovici Park: 17641 Old Cutler Road, Palmetto Bay: total acreage = 2.64
Approximate acreage to be maintained = <1

- excludes butterfly garden areas
- excludes bayside property of National Parks Service
- excludes abutting Palmetto Bay Center property

v. Thalatta Estate: 17301 Old Cutler Road, Palmetto Bay: total acreage = 4.5
Approximate acreage to be maintained = 3

- excludes trimming of all trees and shrubbery..

m. Technical Specifications

i. Mowing

- Mowing shall be performed in a manner that ensures a smooth surface appearance without scalping or leaving any missed uncut grass. All liter, debris, branches, sticks and foreign objects shall be removed before mowing to avoid shredding and damage by propelled rocks, cans or other materials. Mowing wet grass shall be avoided when possible to prevent turf damage. Grass clippings or debris caused by mowing will be removed from all areas immediately. Any and all grass clippings accumulated on freshly cut grass areas following mowing shall be vacuumed or raked up as a part of the mowing task.
- The cutting height shall be a minimum of 2 ½ " to a maximum of 3" above soil level

_____ Contractor
_____ Village

unless otherwise directed by Village (e.g. Thalatta). All equipment shall be cleaned before and after each use with water at a high pressure as to not allow cross pollination of seeds. Mower blades shall be kept sharp so that the cut grass edge is clean and not torn or ragged.

- Mowing shall be done carefully so as not to bark trees or shrubs, intrude into ground cover beds, damage sodded berms, or cause damage to sprinkler heads, valves, manifolds, irrigation times, curbs or other facilities and/or amenities. Should any of the above listed damage occur, the Contractor will be held financially responsible for the replacement or repair. Vehicular damage of any type will be the responsibility of the Contractor for repair or replacement.
- Rotary mowers will be used on St. Augustine grass. Reel mowers or rotary mowers specially designed to cut Bermuda grasses shall be used on Bermuda grass. All mowing shall be done with finish mowers.

ii. Weed-Eating

- Weed-eating shall be performed during, or immediately following mowing, and may be accomplished by hand, hand powered shears or rotary nylon 'fish line' cutting machines. Weed-eating should leave grass at the same height as the mowed turf. Trimmings fro mewed-eating must be removed form around all obstacles in the turf such as posts, trees, walls and fences. Particular attention will be given to trimming around sprinkler heads and other irrigation system fixtures to assure their proper operation.
-

iii. Edging

- The Contractor shall trim and properly edge all shrubs and flower beds as well as tree rings, curbs, walks, underneath/around benches, lighting or other structures. This mechanical edging (vertical trimming) shall be done during or immediately following mowing to produce a neat vertical and uniform line. Contractor shall exercise care in edging tree rings and flowerbeds in order to protect roots/plants.
- Dirt and debris produced by edging or trimming will be removed completely from the site. Landscape lighting shall be wiped off or vacuumed s needed to prevent accumulation of clippings and dead insects. Damage to property or existing vegetation caused by improper trimming or edging shall be repaired within 48 hours of the occurrence at the Contractor's expense.

iv. Weed Control

- Weeds are to be manually removed from shrubs, hedges, ground cover and/or flower beds and tree rings during each frequency. Weeds are also to be removed from walkways, pavers, curbs, expansion joints and along fence lines.

v. Shrub/Hedge Trimming

- All trimming will be accomplished in accordance with standard practices using mechanical hedge trimmers. Machetes will not be permitted for any tasks/operation. Shrub and hedge trimming shall be done at a frequency of once per month.
- Hedges shall be maintained in a geometric form and may be sheared by manual or mechanical hedge shears to appropriate shape or shapes specifically requested by the Village. All cuttings and clippings shall be removed and disposed of off site by the Contractor, the same day trimming/hedging was performed. Upon request of the Village, invoices for dump tickets or other proof that vegetation and other debris has been properly disposed of shall be supplied by the Contractor.
- Contractor shall exercise care of complying with DOT standards with regards to the trimming of shrubs and/or hedges adjacent to roadway surfaces; e.g., maximum height, etc.
- Ground cover shall also be selectively cut back to encourage lateral growth, etc, at the collective agreement of both Contractor and Village.

vi. Litter/Debris/Leaf Control

- Litter removal from all locations shall be done for all areas maintained by the contractor during each frequency visit, including grass areas, plant beds, etc;

specifically removing paper, glass, trash, downed fronds/limbs or any undesirable material or debris.

- During each frequency visit, all accumulation of leaves from any and all areas shall be either vacuumed up or raked and bagged for proper disposal by Contractor
-

vii. Frequency of Services:

- Coral Reef Park; Palmetto Bay Park; Ludovici Park:
  Mowing/Weed-eating/Edging/Weed Control/Litter Control:
  - o April 1th through September 30th = once every 10 days
  - o October 1st through March 31st = once every 14 days
- Perrine Wayside Dog Park:
  Mowing/Weed-eating/Edging/Weed Control/Litter Control:
  - o 2nd and 4th Tuesday of each month; schedule to be provided via work orders
- Thalatta Estate:
  Mowing/Weed-eating/Edging/Weed Control/Litter Control:
  - o March 1st through October 31st = once every 7 days on day-of- week specified by Village
  - o November 1st through February 28th = once every 14 days on
    Work order shall issue for necessary work relating to landscaping services required.

n. The Provisions of the underlying RFP are incorporated by reference and attached hereto as a part of this Contract. If a conflict between the provisions of this agreement and any attachment, the provisions of this agreement shall take precedent over any attachment.

3. Optional Tasks/Bid: The Contractor may also be requested to perform optional work over and above the annually contracted landscape/grounds maintenance tasks described herein, at pre-determined prices as per RFP-2013-PR-002 or as may be negotiated; as follows, and a work order to issue:

a) Stump-Grinding: Stumps shall be grind down to a level a minimum six-inches below the level of existing grounds; debris removed and filled with soil. Bid is to be based per inch ref diameter of stump.

b) Mowing of Athletic Fields at Coral Reef Park (3): These Bermuda fields shall be mowed with frequencies as determined by the Village; e.g., once a week from October 15 through April 15 and twice per week during the growing season of April 16 through October 14, for a total of 80 cuts per year. Mowing must be accomplished with a reel type mower, or rotary mowers also designed for Bermuda fields, and cut at a height between ¾" to 1" above soil level, unless otherwise directed by Village. Mowers hall be cleaned prior to and after mowings, and maintained/sharpened accordingly.

c) Emergency Post-Storm Clean-up of Debris: In the event the Village requires the services of the Contractor to assist in a post-storm clean-up of Village parks, the Contractor shall provide immediate assistance upon request.

d) Contractor shall provide additional services to the Village as determined by the Village Manager or his designee and that are mutualy agreeable by both parties.

3. **Pricing/Cost of Services**: The Village's costs for specified services shall be pursuant to those enumerated on the attached Exhibit 'B' subsequent to prices offered by the Proposer in RFP #2013-PR-002 and as approved by the Village Council via Resolution No._____ ; and may not be increased or in any way revised during the term of this agreement unless with the express written approval of both parties. As Contractor is an independent vendor, the pricing is as provided in the RFP response and no cost-of-living, consumer price index or the like shall be applied in an attempt to increase costs upon the start of a new contract year or any other time. Supervisory personnel, as assigned by the Village, shall inspect each facility

_____ Contractor
_____ Village

following services to confirm that all required tasks have been completed. Should any task be found to be incomplete, the Contractor shall be notified and given 24-hours to rectify. Should the Contractor fail to respond, the specific dollar amount designated for the subject tasks shall be deducted from the total invoiced amount; and processed accordingly.

Upon completion of scheduled landscape/grounds maintenance services, the Contractor shall forward an invoice for payment to the Village. Assigned Village supervisory personnel shall inspect each facility following scheduled frequency, and should any task be found to be incomplete, the Contractor shall be notified and given 24-hours to rectify. Should the Contractor fail to respond, the specific dollar amount designated for the subject task(s) shall be deducted from the total invoiced amount, and processed accordingly. Upon receipt of said invoice, the Village shall remit payment within a thirty (30) day period.

4. Term/Renewal.

a. **Term**. This Agreement shall become effective upon execution by both parties and shall continue for a period of three years, unless earlier terminated the provisions of this Agreement.

b. **Renewal.** The Village shall have the option to renew this Agreement upon the same terms and conditions for up to two (2) additional one (1) year extensions. (the "Option"). The Option may be exercised at the sole discretion of the Village Manager. Such extension shall be effective upon written notice from the Village Manager to the Contractor/Proposer no later than 30 days prior to the date of termination of the Term or any renewal term.

5. **Termination.**

The occurrence of any of the following shall cause this Agreement to be terminated by the Village Manager, or his designee, upon the terms and conditions also set forth below: The Village Manager shall make the final decision on behalf of the Village as to the Contractor's compliance with the terms of the Agreement, quality of services, and termination. The Village and/or Village Manager shall have no liability to the Contractor for future profits or losses in the event of termination. The rights and remedies of the Village Manager provided in this provision shall not be exclusive and are in addition to any other rights and remedies provided by law or under this Agreement.

a. **Automatic Terminations:**

i. Institution of proceedings in voluntary bankruptcy or reorganization by the Contractor.

ii. Institution of proceedings in voluntary bankruptcy against the Contractor if such proceedings continue for a period of ninety (90) days.

iii. Assignment by Contractor for the benefit of creditors.

iv. Abandonment or discontinuation of operations for more than a 24 hour period without prior written approval from the Village.

v. The discovery of any misstatement in the Contractor proposal leading to award of this Agreement, which in the determination of the Village significantly affects the Contractor's qualifications to perform under the Agreement.

vi. Unapproved change of ownership interest in Contractor and/or failure to submit the ownership list within 24 hours upon the request of the Village.

vii. Failure to cease any activity which may cause limitation of Village's use of the Park.

viii. A material default of this agreement, relating to the safety and security of the public at-large and of Village personnel including but not limited to a violation of the Shannon Melendi Act, any

misdemeanor or felony activities, malfeasance, misfeasance, etc., shall result in immediate termination of the agreement.

b. **Termination after seven (7)** calendar days written notice by the Village either by posting on or at the agreement premises and by certified or registered mail to any known address of Contractor for doing any of the following:

i. Notice of any condition posting a threat to health or safety of the public or patrons and not remedied within the seven (7) calendar day period from receipt of written notice.

Consistent with subsection (h) below, for termination under this subsection, the Contractor must remove all items and quit the premises within seven (7) calendar days.

c. **Termination after fourteen (14) days** from receipt of Agreement of written notice having either been posted on or at the Agreement or by certified or registered mail to the address of the Contractor:

i. Non-performance or improper performance of any requirement, covenant or term of this Agreement and failure of the Contractor to remedy such breach within fourteen (14) calendar day period from receipt of the written notice.

ii. A final determination in court of law in favor of the Village in litigation institute by the Contractor against the Village or brought by the Village against the Contractor.

d. Should the Agreement be terminated for 'no fault," or for the convenience of the Village the Village shall solely be responsible to pay the Contractor for a prorated monetary amount relating to actual services provided.

e. **Termination of Agreement**: Contractor shall have the right upon thirty (30) calendar days from receipt of written notice to the Village by certified or registered mail to the address set forth in this Agreement to terminate this Agreement at any time after the occurrence of one or more of the following events:

i. Issuance by any court of competent jurisdiction of any injunction substantially restricting the use of the Agreement for the purposes set forth herein, and the remaining in force of said injunction for a period of more than thirty (30) calendar days.

ii. A breach by the Village of any of the terms, covenants or conditions contained in this Agreement and the failure to the Village to remedy such breach for a period of ninety (90) calendar days after receipt of written notice sent by registered or certified mail, return receipt requested, from the Contractor, of the existence of such breach.

iii. Failure to pay Contractor as provided herein.

6. **Designated Representative**. The Contractor shall appoint, in writing, at the time of the execution of this Agreement, a representative that shall be the sole and exclusive contact with the Village Manager, or his designee.

7. **Insurance**.

a. The Contractor shall furnish to the Village certificates of insurance evidencing the insurance coverages specified by this Section at the request of the Village Manager and required under the RFP. The required certificates of insurance shall name the type of policy provided and shall list the Village as an additional insured, refer specifically to this Agreement, and state that such insurance is as required by this Agreement.

_____ Contractor
_____ Village

b. The Contractor shall name the Village, and its respective officers, agents, servants and employees, as an additional insured on the Comprehensive General Liability Policy. This insurance policy shall state, after the above-referenced additional named insured that "this coverage is primary to all of the coverage the additional insured may have." Proof of insurance shall be provided at the time of the signing of this Agreement and incorporated herein as exists there forth in full.

c. Certificates of Insurance, reflecting evidence of the required insurance, shall be filed with the Village's Risk Manager prior to the commencement of this Agreement. The required insurance coverage is not to cease and is to remain in full force throughout the Term of this Agreement. All policies must be endorsed to provide Village with at least thirty (30) calendar days' notice of cancellation and/or restriction. If any of the insurance coverage will expire prior to the termination of this Agreement, copies of renewal policies shall be furnished at least sixty (60) calendar days' prior to the date of their expiration.

d. Any insurance required of Contractor pursuant to this Agreement must also be required by any sub-contractor of Contractor/Proposer in the same limits and with all requirements as provided herein, including naming the Village as an additional insured, if any work is subcontracted unless such subcontractor is covered by the protection afforded by the Contractor and provided proof of such coverage is provided to Village. The Contractor and any sub-contractor of Contractor shall maintain such policies during the term of this Agreement.

e. Financial Ratings must not be less than "A-VI." Insurance shall be in force until the obligations required to be fulfilled under the terms of the Contract are satisfied. In the event the insurance certificate provided indicates that the insurance shall terminate and lapse during the period of this contract, then in that event, the Contractor shall furnish, at least thirty (30) days prior to the expiration of the date of such insurance, a renewed certificate of insurance as proof that equal and like coverage for the balance of the period of the contract and extension there under is in effect.

f. Contractor shall name the Village (and others) as an additional insured on each of the policies required herein. Contractor shall provide Worker's Compensation Insurance..

g. Throughout the term of this Agreement, the Contractor agrees to maintain in force at their own expense insurance as follows:

Comprehensive General Liability insurance to cover liability for bodily injury and property damage. Exposures to be covered are premises, operations, completed operations, and contractual liability. Coverage must be written on an occurrence basis, with the following limits of liability

A.	Bodily Injury/Property Damage		
	1.	Each Occurrence	$1,000,000
	2.	Annual Aggregate	$1,000,000
B.	Personal Injury		
	1.	Annual Aggregate	$1,000,000

Worker's Compensation Insurance shall be maintained during the life of this contract to comply with Florida statutory limits for all employees. Contractor shall provide Worker's Compensation insurance under Statutory limits, regardless of any state law exemption. The following limits must be maintained:

A.	Worker's Compensation	Statutory
B.	Employer's Liability	$100,000 each accident $500,000 Disease-policy limit

____ Contractor
____ Village

$100,000 Disease-employee

If Contractor/Proposer claims to be exempt from this requirement, Contractor shall provide Village proof of such exemption along with a written request for Village to exempt Contractor, written on Contractor letterhead.

Comprehensive Auto Liability – coverage shall include owned, hired and non-owned vehicles.

A. Bodily Injury and Property Damage combined single limit

1.	Each Occurrence	$1,000,000
2.	Annual Aggregate	$1,000,000

8. **Damage/Restoration/Conditions.**

a. Village does not expressly or impliedly warrant the condition of any facility. The Contractor waives the right to a claim for any damages Contractor its agents, employees, volunteers, guests or invitees from any use of Village or assigned property.

b. Village shall not be liable for any loss, damage or injury of any kind or character, including vandalism and theft, to any person or property (i) caused by any defect in the Contractor's services; (ii) caused by or arising from any act or omission of Contractor, or of any of its agents, employees, volunteers, guests or invitees; (iii) arising from any accident which may occur while Contractor is providing services; or (iv) arising from any other cause. Such actions would be considered a material breach of the Contractor and would provide for termination of services as provided under Section (5)(a)(viii).

c. The Contractor shall deliver the assigned property to the Village in the same condition as it is received.

9. **Liability.** The Contractor hereby assumes all financial, administrative and legal responsibility in connection with, related to, or arising out of the providing of landscape/grounds maintenance services on selected properties.. Nothing in this Agreement will be construed to affect in any way the Village's rights, privileges, and immunities, including the monetary limitations of liability set forth in Section 768.28 of the Florida Statutes (no liability for punitive damages or interest for the period before judgment; nor any claim or judgment which exceeds the sum of $200,000 for one person, or $300,000 total for all claims arising from the same incidence of occurrence). The provisions of this Section will survive the termination or expiration of this Agreement.

10. **Indemnification.** The Contractor does hereby agree to defend, indemnify and hold the Village, its Council, Village Manager, agents, employees, attorneys, successors and assigns harmless from and against any and all liability, damages, costs or expenses (including reasonable attorneys' fees, costs, and expenses at both the trial and appellate levels) arising from the acts or omissions of the Contractor, its agents, employees, volunteers, guests and invitees in connection with this Agreement. The provisions of this Section shall expressly survive any expiration or termination of this Agreement.

11. **Assignment.** The Contractor/Proposer shall not assign, transfer, or otherwise dispose of this Agreement, or any portion thereof, or be subcontracted under this agreement unless Contractor obtains prior written consent from the Village. Approved Subcontractor shall be subject to each provision of this contract and Contractor shall be responsible and indemnify the Village for all Subcontractor' acts, errors or omissions. The Contractor shall not assign, transfer or pledge any interest in this contract without the prior written consent of the Village; provided, however, that claims for money by the Contractor from the Village under this contract may be assigned, transferred or pledged to a bank, trust company, or other financial institution without the Village's approval. Written notice of any assignment, transfer or pledge of funds shall be furnished within 10 days by the Contractor to the Village.

12. **Non-Discrimination.** In the providing of security guard services, Contractor, its employees, agents, volunteers, and any parties under the direction or control of Contractor may not discriminate against any person on the basis

_____ Contractor
_____ Village

of sex, age, race, color, religion, ancestry, national origin, physical handicap or sexual orientation by refusing to furnish to such person any accommodation, facility, service or privilege offered to or enjoyed by the general public. In the performance of this Agreement, Contractor, its employees, agents, volunteers, and any parties under the control or direction of Contractor may not discriminate against any employee or applicant for employment on the basis of sex, age, race, color, religion, ancestry, national origin, physical handicap, or sexual orientation.

13. **Records/Village's Right to Inspect.**

a. Village has the right at all reasonable times to conduct whatever inspections of the facilities the Village deems reasonably necessary to determine if Contractor is complying with the terms and conditions of this Agreement. Except for emergency situations, Village inspections will not hinder or interfere with the normal operation of the Contractor's services.

b. All records, books, documents, papers and financial information (the "Records") that result from Contractor's services to the Village under this Agreement shall be available to the Village upon request. The Village shall have the right to retain copies of the documents at the Village's discretion and expense. All records shall be retained for three (3) years after completion or termination of this contract, or if litigation has ensued, through the termination of any said litigation, including any appeals.

14. **Third Parties.** Neither the Contractor nor Village intends to directly or substantially benefit a third party by this Agreement. Therefore, the parties agree that there are no third party beneficiaries to this Agreement and that no third-party shall be entitled to assert a claim against either of them based upon this Agreement.

15. **Notices.** All notices, requests, demands, elections, consents, approvals and other communications hereunder must be in writing (each such, a "Notice") and addressed as follows (or to any other address which either party may designate by Notice):

To Contractor:
Joseph A. Porter, President
Tip Top Enterprises, Inc
18101 SW 98 Ct
Palmetto Bay, Florida 33157
Phone: 305- 255-8198
Fax:
Email:

To Village:
Ron E. Williams, Village Manager
Village of Palmetto Bay
9705 E. Hibiscus Street
Palmetto Bay, Florida 33157

With a copy to:
Village Attorneys
Attention: Eve A. Boutsis, Esquire
18001 Old Cutler Road, Suite 533
Phone: (305) 235-9344
Facsimile: (305) 235-9372

Any Notice required by this Agreement to be given or made within a specified period of time, or on or before a date certain, shall be deemed to have been duly given if sent by certified mail, return receipt requested, postage and fees prepaid; hand delivered; or sent by overnight delivery service.

16. **Supervision.** All Contractor activities relating to landscape/grounds maintenance services must be supervised by Contractor at all times.

17. **Entire Agreement/Modification/Amendment.**

a. This Agreement sets forth the entire agreement between Village and Contractor with respect to the subject matter of this Agreement. This agreement supersedes all prior and contemporaneous negotiations, understandings and agreements, written or oral, between the parties.

b. No agent, employee, or other representative of either party is empowered to modify and amend the terms of this Agreement, unless executed with the same formality as this document.

18. **Severability**. If any term, covenant, condition or provision of this Agreement (or the application thereof to any circumstance or person) shall be invalid or unenforceable to any extent, the remaining terms, covenants, conditions and provisions of this Agreement shall not be affected thereby; and each remaining term, covenant, condition and provision of this Agreement shall be valid and shall be enforceable to the fullest extent permitted by law unless the enforcement of the remaining terms, covenants, conditions and provisions of this Agreement would prevent the accomplishment of the original intent of the agreement between the parties.

19. **Governing Law**. This Agreement shall be interpreted and construed in accordance with and governed by the Laws of the State of Florida applicable to contracts made and to be performed entirely in the State. The parties agree that venue for and legal action instituted in connection with this Agreement shall be in Miami-Dade County Florida.

20. **Waiver**. The failure of either party to this Agreement to object to or to take affirmative action with respect to any conduct of the other which is in violation of the terms of this Agreement shall not be construed as a waiver of the violation or breach, or of any future violation, breach or wrongful conduct.

21 **Independent Contractor**. Nothing herein contained shall be deemed in any way to constitute Village or Contractor a partner of the other in its business or otherwise, or a joint venturer or a member of a joint enterprise with the other. For all intents and purposes hereunder, Contractor shall be considered an independent Contractor and not an employee or agent of the Village. The Contractor is an independent contractor under this agreement and any project agreements and nothing in this agreement shall create any association, partnership, or joint venture between the parties, or any employer-employee relationship. Personal services provided by the consultant shall be by employees of the consultant and subject to supervision by the consultant, and not as officers, employees, or agents of the Village, personnel policies, tax responsibilities, social security, health insurance, employee benefits, purchasing policies, and other similar administrative procedures applicable to services rendered under this agreement or any project agreements shall be those of the Contractor.

22. **Attorney's Fees.** In connection with any litigation arising out of this Agreement, the prevailing party shall be entitled to recover all reasonable costs incurred including reasonable attorney's fees, the fees and expenses of any paralegals, law clerks and legal assistants and costs for services rendered in connection with any enforcement of this Agreement, including appellate proceedings and post judgment proceedings. Neither party shall be responsible for pre-judgment interest.

_____ Contractor
_____ Village

23. **Miscellaneous**.

a. It is further expressly understood and agreed that no real or personal property is leased to Contractor and that Contractor shall comply with each and all of the undertakings, provision, agreements, covenants, stipulations and conditions contained herein.

b. This Agreement may be signed in two or more counterparts, each of which constitutes the agreement of the parties and each of which will be treated as an original.

c. All terms, conditions, covenants and obligations of Village and Contractor hereunder shall survive the termination or expiration of this Agreement as necessary and appropriate for such parties to fulfill their obligations that accrued during the Term of this Agreement.

d. Contractor and its agents, employees or volunteers shall not be permitted to consume or otherwise possess any alcoholic beverages, tobacco products or other such products as determined by the Village, while providing services.

e. In the event a court must interpret any word or provision of this contract, the word or provision shall not be construed against either party by reason of drafting or negotiating this contract.

24. **Force Majeure:**

The performance of any act by the Village or Contractor hereunder may be delayed or suspended at any time while, but only so long as, either party is hindered in or prevented from performance by acts of God, the elements, war, rebellion, strikes, lockouts or any cause beyond the reasonable control of such party, provided however, the Village shall have the right to provide substitute service from third parties or Village forces and in such event the Village shall withhold payment due Contractor for such period of time. If the condition of force majeure exceeds a period of 14 days the Village may, at its option and discretion, cancel or renegotiate this Agreement.

25. **Waiver Of Jury Trial:**

The Village and the Contractor knowingly, irrevocably voluntarily and intentionally waive any right either may have to a trial by jury in State or Federal Court proceedings in respect to any action, proceeding, lawsuit or counterclaim based upon the Contract Documents or the performance of the Work there under.

26. **Contingency Fee and Code of Ethics.** Contractor warrants that neither it, nor any principal, employee, agent, representative or family member has promised to pay, and Contractor has not, and will not, pay a fee the amount of which is contingent upon the Village awarding this contract to Contractor. Contractor warrants that neither it, nor any principal, employee, agent, representative or family member has procured, or attempted to procure, this contract in violation of any of the provisions of the Miami-Dade County or the Village of Palmetto Bay conflict of interest and code of ethics ordinances. A violation of this paragraph will result in the termination of the contract and forfeiture of funds paid, or to be paid, to the Contractor.

27. **Warranty Of Authority.** The signatories to this contract warrant that they are duly authorized by action of their respective Village commission, board of directors or other authority to execute this contract and to bind the parties to the promises, terms, conditions and warranties contained in this agreement.

28. **Taxes.** During the period of this agreement, Contractor shall pay any and all taxes of whatever nature lawfully levied upon or assessed that arise out of the operations of the Contractor in connection with this agreement.

29. **RFP.** Contractor agrees to comply with any provisions of the RFP which are not in conflict with this Agreement, and to comply with and honor any written representations, clarifications and exceptions made by Contractor/Proposer during the RFP process.

30. **Compliance with Law.** Contractor shall comply with all applicable laws in the performance of its services hereunder, and represents that it possesses all required licenses and certifications to perform the services.

____ Contractor
____ Village

31. **Shannon Melendi Act.** The Contractor shall comply with the "Shannon Melendi Act of Miami-Dade County", and as adopted by the Village, which act is incorporated by reference for the purpose of conducting background investigations for all coaches, managers, officials, umpires, members, employees, and/or volunteers or participants ("Volunteers") associated with the operation of programs and/or activities for the Contractor. Required background investigations shall be completed by Contractor in accordance with the Melindi Act.

32. **Non-Waiver.** Any waiver or any breach of covenants herein contained to be kept and performed by Contractor shall not be deemed or considered as a continuing waiver and shall not operate to bar or prevent the Village from declaring a forfeiture for any succeeding breach, either of the same condition or covenants or otherwise.

33. **Public Entities Crime Statement.** person or affiliate who has been placed on the convicted vendor list following a conviction for public entity crime may not be awarded or perform work as a contractor, supplier, subcontractor, or consultant under a contract with any public entity, and may not transact business with any public entity in excess of the threshold amount provided in section 287.017, Florida Statutes. for category two for a period of 36 months from the date of being placed on the convicted vendor list. Contractor affirms compliance with this requirement for the duration of the underlying agreement. If at any time during the contract period, Contractor is convicted of a public entity crime, the Contractor's contract shall immediately terminate.

[REMAINDER OF PAGE LEFT INTENTIONALLY BLANK].

_____ Contractor
_____ Village

IN WITNESS WHEREOF the parties hereto have executed this Agreement this ____ day of _____ _____, 2013.

Village:

ATTEST:

Village Palmetto Bay, a Florida municipal corporation

By:_____
Meighan J. Alexander, Village Clerk

By:_____
Ron E. Williams, Village Manager

Approved as to form and legality for the use and benefit of the Village of Palmetto Bay only

Contractor/Proposer:

_____
Village Attorney

By:_____
Joseph A Porter, President
Tip Top Enterprises Inc

[END OF DOCUMENT]

____ Contractor
____ Village

Appendix A: Village Ordinance 08-10
Shannon Melendi Act

_____ Contractor
_____ Village

____ Contractor
____ Village

Attachment C

Village of Palmetto Bay Resolution _____

_____ Contractor
_____ Village

To: Honorable Mayor and Village Council

Date: August 30, 2013

From: Ron E. Williams, Village Manager

Re: Recommendation for Approval
PBP - Picnic Pavilion

A RESOLUTION OF THE MAYOR AND VILLAGE COUNCIL OF THE VILLAGE OF PALMETTO BAY, FLORIDA, RELATING TO PARKS AND RECREATION; AUTHORIZING THE VILLAGE MANAGER TO ENTER INTO CONTRACT WITH REP SERVICES, INC. FOR THE PURCHASE, DELIVERY AND INSTALLATION OF A PICNIC PAVILION AT PALMETTO BAY PARK; PIGGYBACKING UNDER THE CLAY COUNTY CONTRACT NO. 08/09-03; AND AUTHORIZING THE VILLAGE MANAGER TO APPROVE EXPENDITURE OF FUNDS IN AN AMOUNT NOT TO EXCEED $51,835.00; AND PROVIDING AN EFFECTIVE DATE.

BACKGROUND AND ANALYSIS:
In recognition of the need to enhance potential activity venues within Palmetto Bay Park, the Village Council approved as a part of the FY 2012-2013 Capital Improvement Program, funding for the purchase, delivery and installation of a picnic pavilion to be located within the children's playground. The specified pavilion shall include the following:

- 20' x 24' Porter/Polygon Shelter Model RAM20'x24' (see attached rendering)
- Primary Roof: Tongue and Groove Southern Pine
- Secondary Roof: Standing Seam to Match Quad Building
- 24" Railings
- 5' Openings on the 20' Sides
- Electrical Cut-Outs and Lightning Protection
- Extensions to Walkways to Pavilion Entries
- Includes All Necessary Site Work (except relocating trees)

FISCAL IMPACT: Funding available as authorized in the FY 2012-2013 Adopted Budget.

RECOMMENDATION: Approval.

RESOLUTION NO. _____

A RESOLUTION OF THE MAYOR AND VILLAGE COUNCIL OF THE VILLAGE OF PALMETTO BAY, FLORIDA, RELATING TO PARKS AND RECREATION; AUTHORIZING THE VILLAGE MANAGER TO ENTER INTO CONTRACT WITH REP SERVICES, INC. FOR THE PURCHASE, DELIVERY AND INSTALLATION OF A PICNIC PAVILION AT PALMETTO BAY PARK; PIGGYBACKING UNDER THE CLAY COUNTY CONTRACT NO. 08/09-03; AND AUTHORIZING THE VILLAGE MANAGER TO APPROVE EXPENDITURE OF FUNDS IN AN AMOUNT NOT TO EXCEED $ 51,835.00; AND PROVIDING FOR AN EFFECTIVE DATE.

WHEREAS, in an effort to provide additional recreational amenities within Palmetto Bay Park, the addition of a pavilion within the playground area would create yet another venue for gatherings and compliment the area's overall potential use; and,

WHEREAS, the Village Council, via Resolution No. 2013-44, revised the Palmetto Bay Park master plan to incorporate a picnic pavilion in the playground area; and,

WHEREAS, in accordance with our procurement process, the Village seeks to piggyback on the price agreement contracts with the current Clay County Contract No. 08/09-03, which contract was competitively procured by another governmental entity; and,

WHEREAS, capital dollars necessary for this expenditure is identified and approved in the Village's FY 2012-2013 Annual Capital Improvement Budget; and

WHEREAS, the Mayor and Council may authorize the Village Manager to enter into agreement with Rep Services, Inc. for the purchase, delivery and installation of a picnic pavilion at Palmetto Bay Park.

NOW, THEREFORE, BE IT RESOLVED BY THE MAYOR AND VILLAGE COUNCIL OF THE VILLAGE OF PALMETTO BAY, FLORIDA, AS FOLLOWS:

Section 1. The Village Manager is hereby authorized to enter into agreement with Rep Services, Inc. for the purchase, delivery and installation of a picnic pavilion at Palmetto Bay Park; consistent with the terms and conditions proposed within quotation No. 8773.05, under Clay County Contract No. 08/09-03.

Section 2. The Village Manager is hereby authorized to accept piggybacking prices and contract terms as under the current Clay County Contract No. 08/09-03.

Section 3. The Village Manager is hereby authorized to issue a purchase order in an amount not to exceed $ 51, 835.

Section 4. This resolution shall take effect immediately upon adoption.

PASSED AND ADOPTED this _____ day of September, 2013.

Attest: _____ _____

Meighan J. Alexander
Village Clerk

Shelley Stanczyk
Mayor

APPROVED AS TO FORM:

_____

Eve A. Boutsis
Village Attorney

FINAL VOTE AT ADOPTION:

Council Member Patrick Fiore _____

Council Member Tim Schaffer _____

Council Member Joan Lindsay _____

Vice-Mayor John Dubois _____

Mayor Shelley Stanczyk _____

REP SERVICES, INC.
Experts at Play & Outdoor Spaces

Please make POs and contracts out to:
Rep Services, Inc.
585 Technology Park
Lake Mary, FL 32746--6239

Please mail checks to:
Rep Services, Inc.
585 Technology Park
Lake Mary, FL 32746--6239

Proposed To:	Village of Palmetto Bay Parks and Recreation 9705 E Hibiscus Street Palmetto Bay, FL 33157	**Ship To:**	Village of Palmetto Bay Parks and Recreation 9705 E Hibiscus Street Palmetto Bay, FL 33157	**Bill To:**	Village of Palmetto Bay Parks and Recreation 9705 E Hibiscus Street Palmetto Bay, FL 33157
Attn:	Fanny Carmona	**Attn:**	Fanny Carmona	**Attn:**	Fanny Carmona
Phone:	305-720-7584	**Phone:**	305-720-7584	**Phone:**	305-720-7584
Fax:	305-259-1290	**Fax:**	305-259-1290	**Fax:**	305-259-1290
				Terms:	See below

Project No: 8773
Proposal No: 8773.05
Proposal Date: 7/30/2013

Project Name: Palmetto Bay Park-Furnishings
Proposal Name: Palmetto Bay Park-Option 3
Proposal Expires: 8/29/2013

Project Contact: Fanny Carmona
Project Location: 17535 SW 95th Avenue
Palmetto Bay, FL 33157

For Questions Contact: Jacqui Rohrborn **Ph #** 407-831-9658 x223 **E-Mail:** jacqui@repservices.com
Sales Consultant: Debbie Levine **Ph #** 561-353-0980 **E-Mail:** dlevine@repservices.com **Option** A **Rev:** 1 **Input By:** JR - 7/30/2013

Vendor: PorterCorp
538458

Proj Drawings:
Freight: Prepaid **Ship Method:** Best Way **FOB:** Destination

	Part No	Qty	Description	Unit Wt	Unit Price	Net Price	Ext Price
Shelters	85237R3	1	Porter/Poligon Shelter Model: RAM20'x24' Primary Roof: Tongue & Groove (T&G) Secondary Roof: Standing Seam (SS) Eave Height (UPB): 7'8 11/16" Upper Roof Slope: 12/4.0 Electrical Cutout: (3) Electrical Access: Included Ornamentation: Carmel Railings on 24' sides 5' center opening on the 20' sides - Lightning Protection: Included 2010 FBC Risk Category I	0	24,950.00 -2.0%	24,451.00	24,451.00
Total Product:				0			$24,451.00

Discount per the Clay County Contract #08/09-3: $499.00

Other Charges: Sealed Eng Dwgs: $550.00:	$550.00
Freight Charge:	$2,817.50
PorterCorp Total:	$27,818.50

Vendor: D W Recreation Services, Inc.
538459

	Part No	Qty	Description	Ext Price
Custom	DUMPSTER	1	Dumpster	500.00
	INS-CON	1	Install Concrete walkways at (2) openings of shelter	775.00
	INS-CON FT	1	Install Concrete Footing(s)	2,535.50
	INS-CON SLAB	1	Install Concrete Slab	3,230.00
	INS-POR	1	Equipment Installation - Poligon Shelter(s) by PorterCorp	12,600.00
	OTHER	1	Restoration	635.00
	OTHER	1	Construction Fence	2,536.00
	PERMITTING	1	Labor charge to pull permit by State of Florida Licensed GC, including processing permit documents to obtain permit from appropriate jurisdiction. DOES NOT INCLUDE PERMIT FEES.	635.00
	STORAGE	1	Storage of product pending installation.	570.00

D W Recreation Services, Inc. Total: $24,016.50

General Terms of Sale and Proposal Summary

Government: Net 30, Resellers: Payment with Order	**Product:**	$25,001.00
With Credit Approval: 50% down, Net 30	**Installation:**	$24,016.50
All Others: *50% down, Balance Prior to Shipment	**Freight:**	$2,817.50
*Note: Orders less than $5,000 require check with order	**Proposal Total:**	$51,835.00

Notes

Proposal Opt 3 - RAM20x24TGSS

Clay County Contract #08/09-3 discounts and installation: Porter - Poligon, Pinnacle, Parasol 2% discount; installation 53% of list price (Installation does not include site prep, slabs or engineered footings).

Poligon Shelters by PorterCorp:
Please provide Building Department permit application requirements including
Risk Category.

Certificates:
Miami-Dade County Certificate of Competency No. 09-0804.03
PCI (Powder Coating Institute) 4000 Certified

Four sets of signed and sealed drawings and calc books for the building permit process will be provided approximately four weeks after receipt of Order. If you require additional sets of drawings and calc books, they are $150 per set.

Factory Fabrication will begin AFTER our receipt of a copy of the Building Permit or a signed letter of release for fabrication by the end owner or their agent.

Poligon by PorterCorp:
When placing an order, please confirm your standard color selections as shown on the back inside cover of the catalog. Select roofing color and POLI-5000 (the most durable frame finish available) color. For Parasol Fabric covered shade shelters select top color from page 67. Non-Standard colors and finishes are available at an additional charge.

INSTALLATION:
Unless otherwise noted, the following items are to be ***PROVIDED BY CUSTOMER*** prior to installation:

- Site security to prevent theft or vandalism of equipment.
- Water and 110 Electric.
- Underground Utilities Located and Marked prior to installation.
- Site Plan or Survey, if required.
- Electrical Conduit to be provided by others

THIS PROPOSAL DOES NOT INCLUDE THE PERMIT FEES ASSESSED BY THE BUILDING DEPARTMENT. THOSE FEES MAY RESULT IN ADDITIONAL CHARGES.

Installation Charges on this proposal are based on NO UNFORESEEN conditions in the area, above or below the surface. If unforeseen conditions arise, the installation charges will change to reflect additional costs associated with dealing with those unforeseen circumstances. Examples of this include, but are not limited to, site not ready upon installer's arrival, difficulties with underground utilities, or difficulties with post footers due to coral rock or ground water in the holes.

The undersigned warrants that he/she is an authorized representative of the company noted and has the requisite authority to bind said company and/or principal. If any particular billing is not paid when due, all outstanding balances, regardless of prior terms, will become immediately due and owing upon demand. Interest on past due amounts will be assessed at 1 ½ % per month or the maximum interest rate permitted by applicable law, whichever is less. Should it become necessary for either party to this contract to institute legal action for enforcement of any provisions of this contract, the prevailing party shall be entitled to reimbursement for all court costs and reasonable attorney's fees incident to such legal action. The parties hereto agree that proper venue for any legal action in any way related to this contract shall be in Seminole County, FL.

Accepted By:

Village of Palmetto Bay			
Company Name	Authorized By	Printed Name	Date

As Its: _____
Title

585 Technology Park · Lake Mary, FL 32746-6239
407.831.9658 (P) · 407.834.5366 (F) · 800.992.5357
www.repservices.com sales@repservices.com

poligon®

PALMETTO BAY PARK

MIAMI, FL
RAM 20 x 24

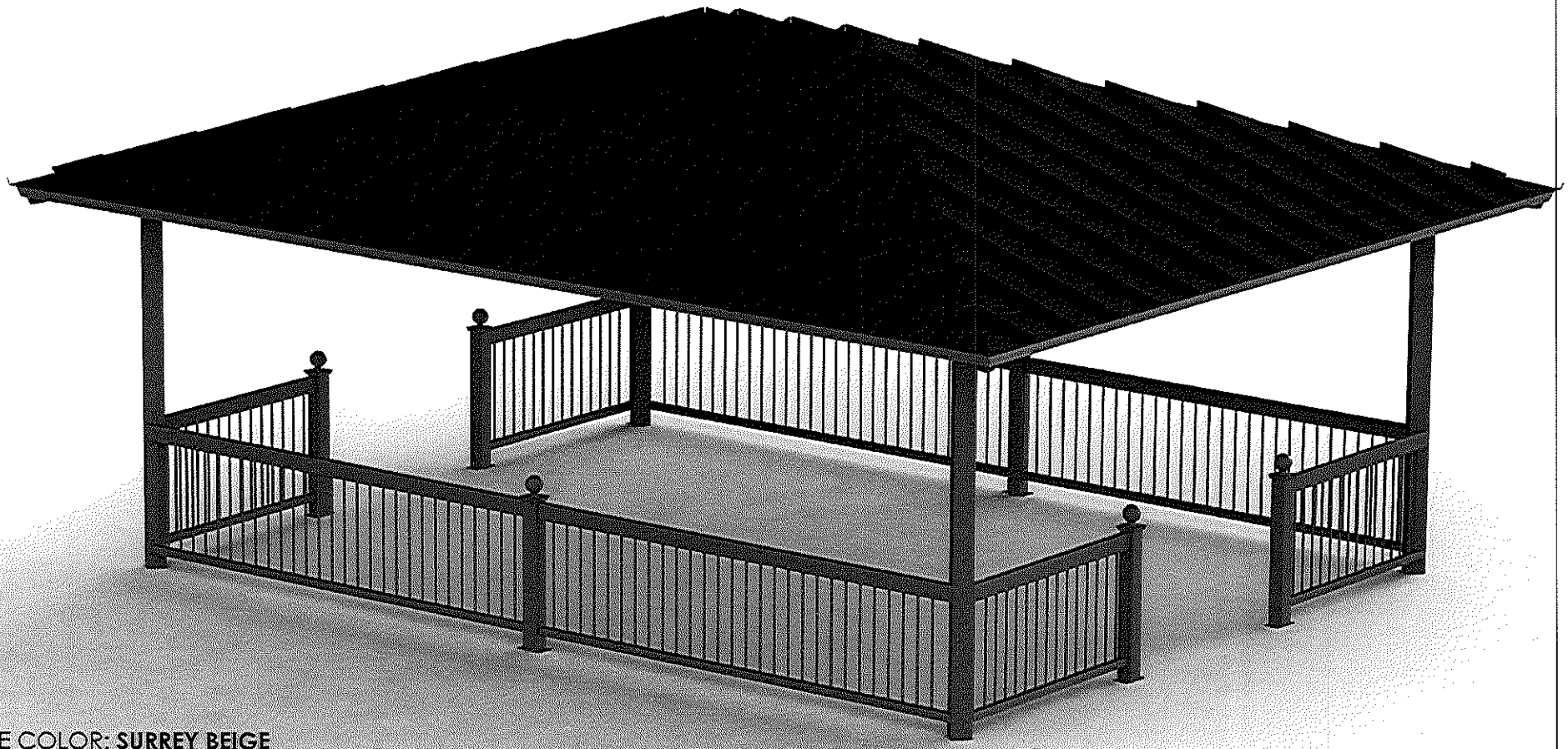

FRAME COLOR: **SURREY BEIGE**
ROOF COLOR: **REGAL BLUE**
COLORS SHOWN ARE FOR REFERENCE ONLY.
CONTACT INFO@POLIGON.COM TO REQUEST ACTUAL COLOR SAMPLES.

poligon®

A Division of PORTERCORP 4240 N. 136th AVE. HOLLAND, MI 49424 (616) 399-1963
Designs and calculations of Poligon buildings are protected under copyright laws and patents and may not be used in the construction or design of a building that is not supplied by Poligon. Copyright laws protect the style and visual appearance of the structure while patents may protect other parts of the design. PATENTED AND/OR PATENTS PENDING COPYRIGHT 2013 PORTERCORP HOLLAND, MI 49424

PROJECT: PALMETTO BAY PARK

LOCATION: MIAMI, FL

BUILDING TYPE: RAM 20 x 24

ROOF TYPE: STANDING SEAM OVER T & G

FEATURES: CARMEL RAILING

JOB NUMBER: 50713

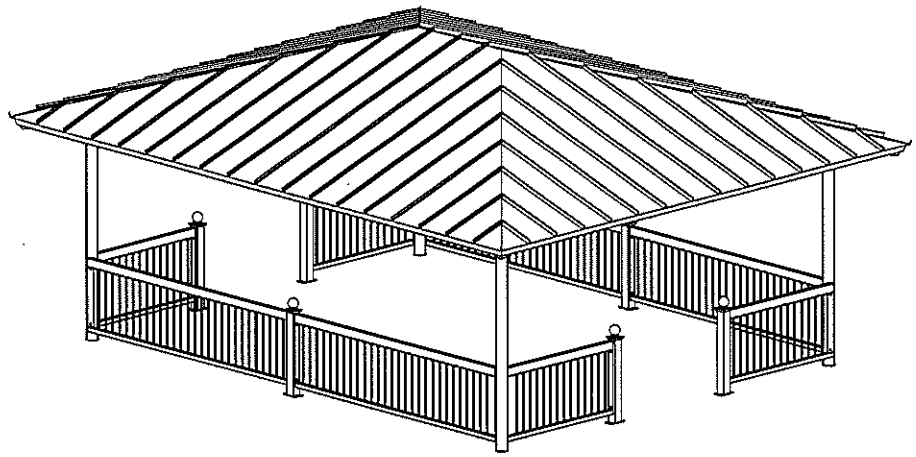

DRAWING LIST:

SHEET NUMBER	DRAWING DESCRIPTION
CS	COVER SHEET
1	ARCHITECTURAL ELEVATIONS
2	STRUCTURAL FRAMING PLAN
3	COLUMN LAYOUT
4	BASE PLATE STYLES
5	ELECTRICAL ACCESS AND CUTOUTS

STOP!!
NOT FOR CONSTRUCTION

USE FOR PRELIMINARY PLANNING AND ESTIMATING ONLY

FABRICATOR APPROVALS:
CITY OF PHOENIX, AZ APPROVED FABRICATOR #C08-2010
CITY OF LOS ANGELES, CA APPROVED FABRICATOR #1596
CITY OF RIVERSIDE, CA APPROVED FABRICATOR #SP06-0033
CITY OF HOUSTON, TX APPROVED FABRICATOR #470
CLARK COUNTY, NV APPROVED FABRICATOR #264
STATE OF UTAH APPROVED FABRICATOR 02008-14

CERTIFICATES:
MIAMI-DADE COUNTY CERTIFICATE OF COMPETENCY NO. 12-0905.07
PCI (POWDER COATING INSTITUTE) 4000 CERTIFIED

MATERIALS:

DESCRIPTION	ASTM DESIGNATION
TUBE STEEL	A500 (GRADE B)
SCHEDULE PIPE	A53 (GRADE B)
RMT PIPE	A519
LIGHT GAGE COLD FORMED	A1003 (GRADE 50)
STRUCTURAL STEEL PLATE	A36
ROOF PANELS (STEEL)	A653

GENERAL NOTES:
UNLESS NOTED OTHERWISE, THIS STRUCTURE WAS DESIGNED TO ONLY SUPPORT WHAT IS SHOWN ON THESE DRAWINGS. POLIGON MUST BE CONTACTED IF ANYTHING ELSE IS TO BE ATTACHED TO THIS STRUCTURE (WALLS, COLUMN WRAPS, RAILINGS, ETC.) SO THE DESIGN OF THIS STRUCTURE CAN BE REVIEWED AND POSSIBLY REVISED.

UNLESS NOTED OTHERWISE, THIS STRUCTURE WAS DESIGNED ASSUMING A 20' SEPARATION BETWEEN ANY ADJACENT STRUCTURE WITH AN EAVE HEIGHT EQUAL TO OR GREATER THAN THE EAVE HEIGHT OF THIS STRUCTURE. IF THAT SEPARATION DOES NOT EXIST, POLIGON MUST BE CONTACTED SO THE DESIGN OF THIS STRUCTURE CAN BE REVIEWED AND POSSIBLY REVISED.

STRUCTURAL STEEL SHALL BE DETAILED, FABRICATED, AND ERECTED IN ACCORDANCE WITH THE LATEST EDITION OF THE AMERICAN INSTITUTE OF STEEL CONSTRUCTION (AISC) SPECIFICATION MANUAL.

ALL WELDING IS PERFORMED BY AMERICAN WELDING SOCIETY CERTIFIED WELDERS AND CONFORMS TO THE LATEST EDITION OF AWS D1.1 OR D1.3 AS REQUIRED.

PARTS SHOWN MAY BE UPGRADED DUE TO STANDARDIZED FABRICATION. REFER TO THE SHIPPING BILL OF MATERIALS FOR POSSIBLE SUBSTITUTIONS.

FOR PROPER FIELD INSTALLATION OF THE BUILDING IT IS RECOMMENDED THAT THE PRIMARY FRAME INSTALLER AND THE ROOF INSTALLER HAVE A MINIMUM FIVE (5) YEARS DOCUMENTED EXPERIENCE INSTALLING THIS TYPE OF PRODUCT.

FOR PROPER FIELD INSTALLATION OF THE BUILDING IT IS RECOMMENDED THAT ELECTRIC WIRING, IF REQUIRED, BE RUN THROUGH THE STRUCTURAL MEMBERS BEFORE THE BUILDING IS ERECTED.

CUSTOMER APPROVAL

MANUFACTURING CANNOT START UNTIL PORTERCORP RECEIVES A SIGNED AND APPROVED COPY.

☐ APPROVED AS SUBMITTED

☐ APPROVED AS NOTED

☐ REVISE AND RESUBMIT AS NOTED

SIGNATURE: _____

PRINT NAME: _____

DATE: _____

poligon® (616)399-1963 www.poligon.com
byPORTERCORP
4240 N. 136th AVE. HOLLAND, MI 49424
COPYRIGHT 2013 PATENTED OR PATENTS PENDING

REV LEVEL: A
SCALE: 1:50
DRAWN BY: rallun
PRINT DATE: 7/22/2013
JOB NO: 50713
CAD MODEL: E1-RAM-20-24-TGDS-50713

PROJECT: PALMETTO BAY PARK
PROJECT LOCATION: MIAMI, FL
DRAWING: COVER SHEET

SHEET
CS

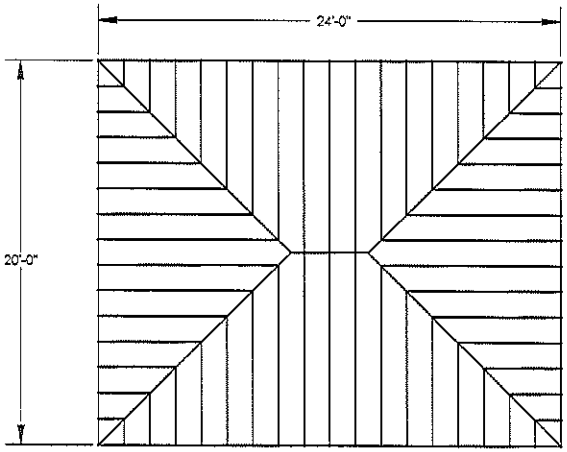

TOP VIEW

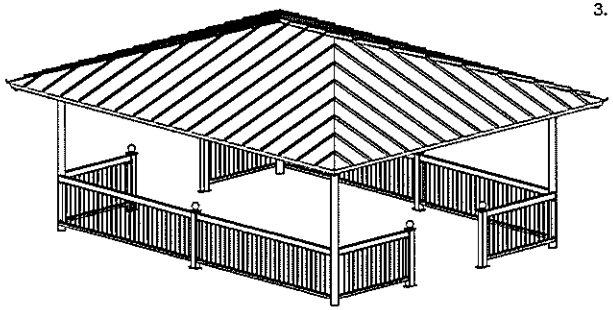

AUXILIARY VIEW

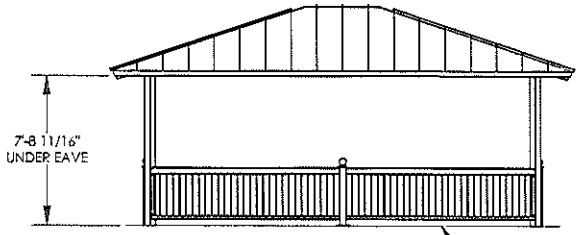

ELEVATION A

FINISH GRADE. MOUNTING VARIES BASED ON ENGINEERING REQUIREMENTS VISIT POLIGON.COM FOR OPTIONS.

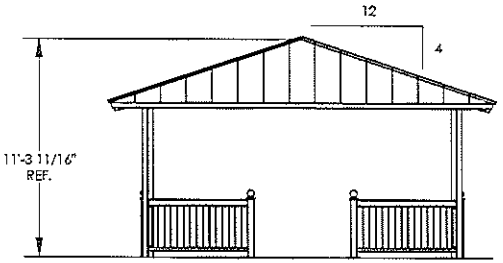

ELEVATION B

GENERAL ROOF NOTES:

1. METAL ROOFING:
   - 24 GAUGE
   - GALVALUME COATED
   - KYNAR 500 PAINTED
2. TRIM COLOR MATCHES ROOF
3. SEE POLIGON.COM FOR COLOR OPTIONS

STOP!!
NOT FOR CONSTRUCTION

USE FOR PRELIMINARY PLANNING AND ESTIMATING ONLY

poligon
(616)399-1963
www.poligon.com
by PORTERCORP

COPYRIGHT 2013
PATENTED OR PATENTS PENDING
PORTERCORP 4240 N. 136th AVE HOLLAND, MI 49424

REV LEVEL:	A
SCALE:	1:75
DRAWN BY:	rallun
PRINT DATE:	7/22/2013
JOB NO:	50713
CAD MODEL:	E1~RAM-20-24-TGDS-50713
PROJECT:	PALMETTO BAY PARK
PROJECT LOCATION:	MIAMI, FL
DRAWING:	ARCHITECTURAL ELEVATIONS
SHEET	1

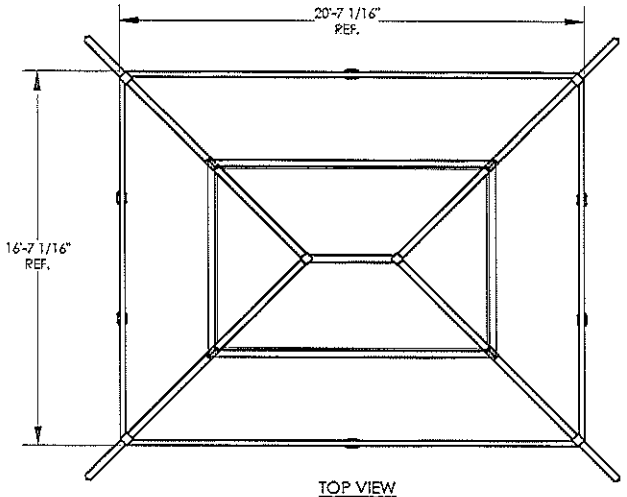

TOP VIEW

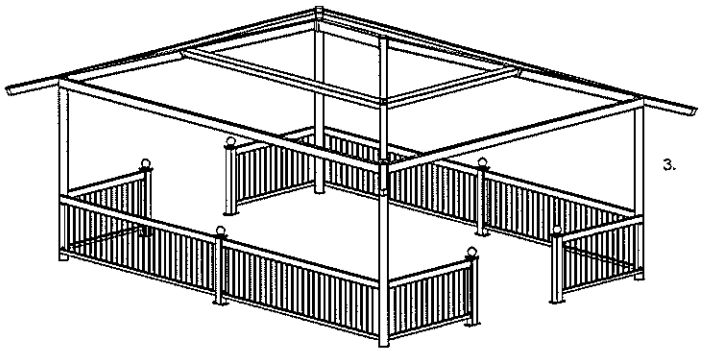

AUXILIARY VIEW

GENERAL FRAME NOTES:

1. ALL STEEL COMPONENTS, INCLUDING STRUCTURAL MEMBERS, ORNAMENTATION, RAILING, ETC. ARE POWDER COAT FINISHED.
2. FRAME FINISH:
   - MEMBERS SHOT BLASTED TO NEAR WHITE CONDITION (SSPC SP-10)
   - MEMBERS WASHED AND SEALED IN A PHOSPHATE SPRAY
   - MEMBERS PRIME COATED WITH POLI-5000 HIGH PERFORMANCE POWDER APPLIED EPOXY
   - MEMBERS TOP-COATED WITH SUPER-DURABLE TGIC POLYESTER POWDER AND OVEN CURED
   - OPTIONAL EPOXY UNDERCOAT (E-COAT) FULL IMMERSION ELECTRO DEPOSITION PROCESS.
3. SEE POLIGON.COM FOR COLOR OPTIONS.

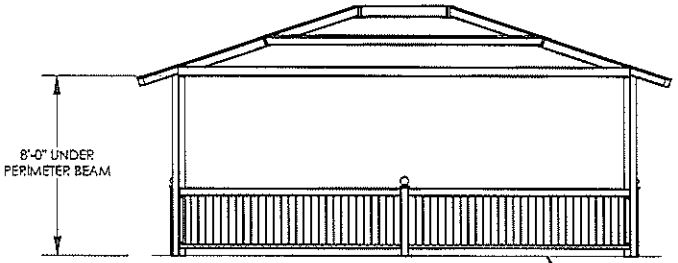

ELEVATION A

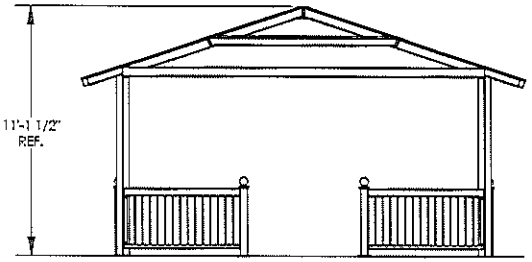

ELEVATION B

FINISH GRADE.
MOUNTING VARIES
BASED ON ENGINEERING
REQUIREMENTS VISIT
POLIGON.COM FOR
OPTIONS.

STOP!!
NOT FOR CONSTRUCTION

USE FOR PRELIMINARY PLANNING AND ESTIMATING ONLY

poligon® (616)399-1963 www.poligon.com
byPORTERCORP
CORPORATE OFFICE: 4949 E. PARIS AVE. SE GRAND RAPIDS, MI 49512
POLIGON.COM 4949 E. PARIS AVE SE GRAND RAPIDS, MI 49512

PROJECT: PALMETTO BAY PARK
PROJECT LOCATION: MIAMI, FL
DRAWING: STRUCTURAL FRAMING PLAN
SHEET 2

PRINT DATE: 7/22/2013
JOB NO.: 50713
CAD MODEL: E1-RAM-20-24-1GDS-50713

DRAWN BY: rallun
REV LEVEL: A
SCALE: 1:64

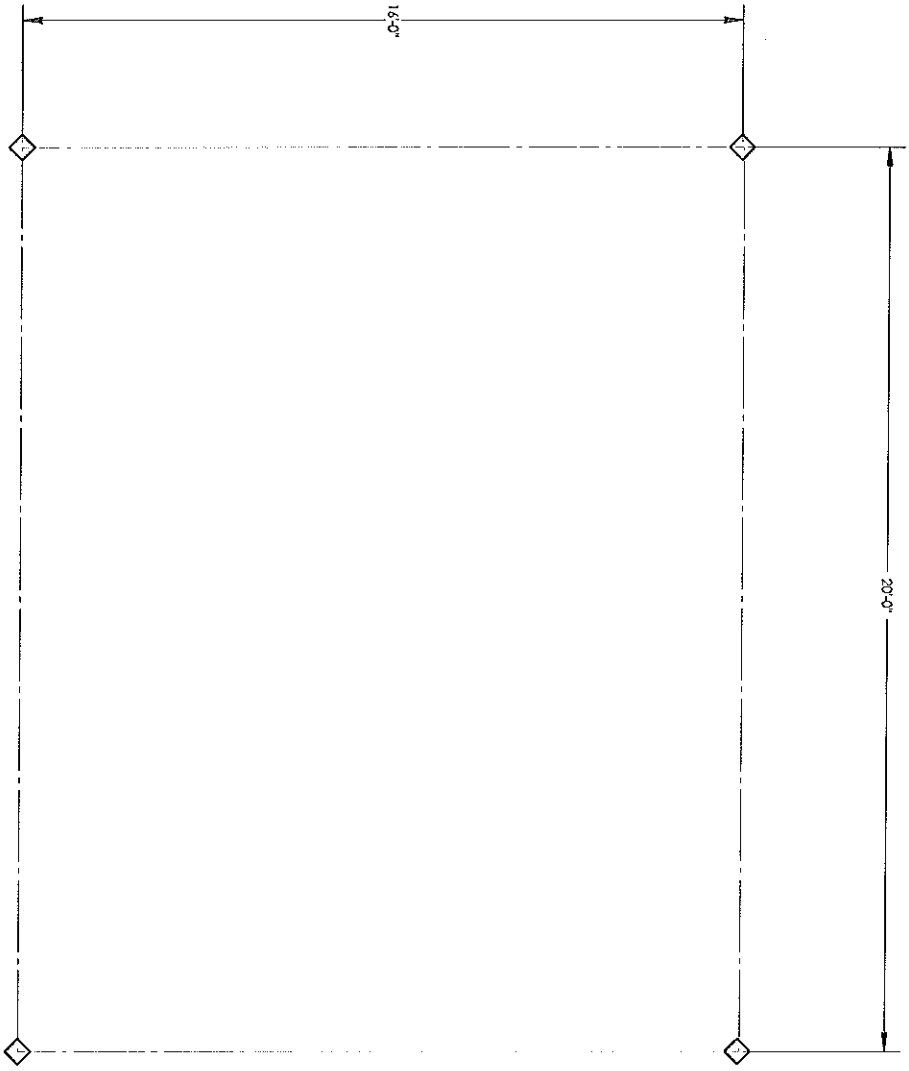

STOP!!
NOT FOR CONSTRUCTION
USE FOR PRELIMINARY PLANNING AND ESTIMATING ONLY

SHEET 3	PROJECT: PALMETTO BAY PARK	PRINT DATE: 7/22/2013	DRAWN BY: rallun	REV LEVEL: A
	PROJECT LOCATION: MIAMI, FL	JOB NO: 50713		SCALE: 1:32
	DRAWING: COLUMN LAYOUT	CAD MODEL: E1~RAM-20-24-TGDS-50713		

poligon
(616)399-1963
www.poligon.com
by PORTERCORP
COPYRIGHT 2013
PATENTED OR PATENTS PENDING
PORTERCORP 4240 N. 136th AVE HOLLAND, MI 49424

BASEPLATE DESIGN INFORMATION SHEET

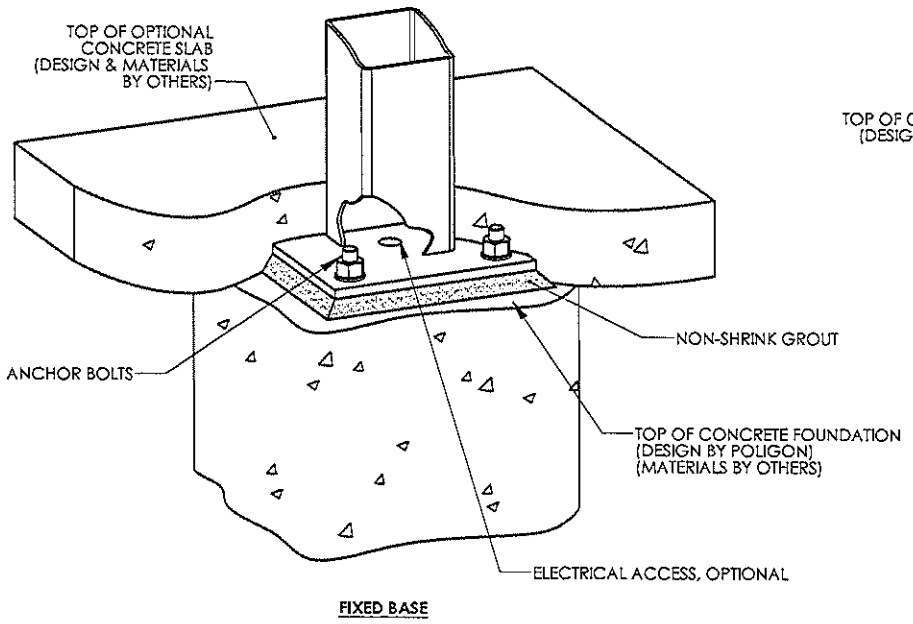

FIXED BASE

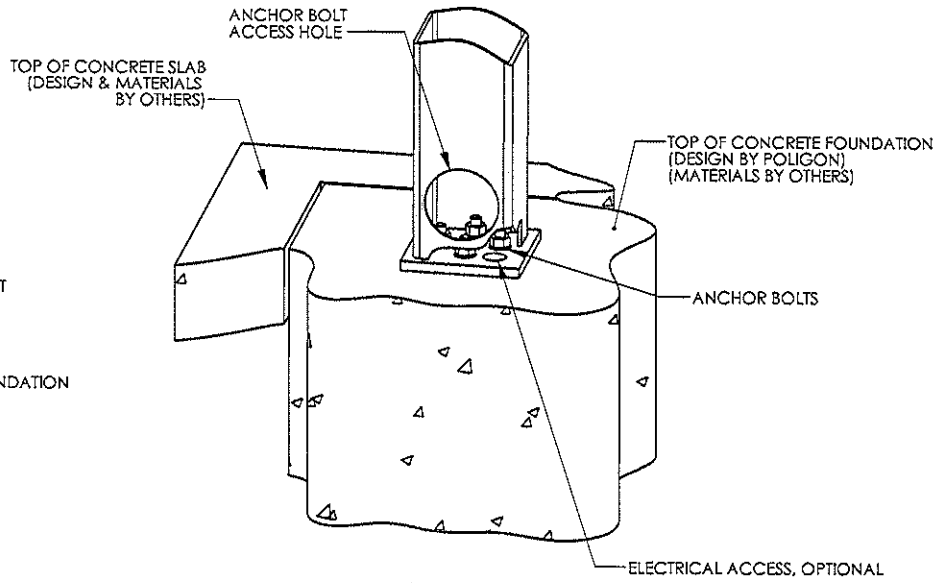

PINNED BASE

NOTES:

1. THE REQUIRED BASE PLATE STYLE IS A FUNCTION OF THE PROJECT SPECIFIC ENGINEERING REQUIREMENTS.
2. POLIGON ENGINEERING WILL DETERMINE THE REQUIRED BASE PLATE STYLE BECAUSE IT CAN DRAMATICALLY AFFECT THE STRUCTURE'S DESIGN AND PERFORMANCE.
3. WE UNDERSTAND THE BASE PLATE STYLE CAN IMPACT THE CONSTRUCTION SEQUENCE (I.E. THE TIMING OF THE SLAB INSTALLATION), SO PLEASE USE THE FOLLOWING INFORMATION AS A GENERAL GUIDE:
   - PINNED BASE PLATES ARE PROVIDED ON THE VAST MAJORITY OF POLIGON STRUCTURES
   - FIXED BASE PLATES ARE TYPICALLY ONLY REQUIRED ON CANTILEVERED STRUCTURES, ON SOME LARGE STRUCTURES (> 2000 SQ FT), AND IN HIGH SEISMIC REGIONS.
4. IF YOUR PROJECT HAS UNIQUE BASE PLATE, SLAB, OR FOUNDATION REQUIREMENTS, PLEASE COMMUNICATE THAT INFORMATION WITH POLIGON WHEN PLACING AN ENGINEERING ORDER.

STOP!!
NOT FOR CONSTRUCTION

USE FOR PRELIMINARY PLANNING AND ESTIMATING ONLY

poligon
(616)399-1963
www.poligon.com
byPORTERCORP

PROJECT: PALMETTO BAY PARK
PROJECT LOCATION: MIAMI, FL
DRAWING: BASE PLATE STYLES
PRINT DATE: 7/22/2013
JOB NO: 50713
CAD MODEL: E1-RAM-20-24-TGDS-50713
DRAWN BY: rallun
REVISED: A
SCALE: 1:6
SHEET: 4

ELECTRICAL ACCESS AND CUTOUTS

WHAT IS ELECTRICAL ACCESS?
- A 1-1/8" Ø HOLE IS PROVIDED THROUGH COLUMN BASEPLATE.
- 3/4" Ø HOLES ARE PROVIDED THROUGH CONNECTION PLATES TO ALLOW WIRE ACCESS UP INTO COMPRESSION TUBE/RING OR RIDGE BEAM.
- ELECTRICAL ACCESS INTO ADDITIONAL MEMBERS IS AVAILABLE UPON REQUEST.

WHAT ARE ELECTRICAL CUTOUTS?
- ROUND HOLE OR RECTANGULAR CUTOUTS IN MEMBERS, REQUIRED FOR INSTALLATION OF ELECTRICAL FIXTURES OR WIRE ACCESS.
- ALL CUTOUT REQUESTS MUST BE REVIEWED BY OUR ENGINEERING DEPARTMENT (THEIR PLACEMENT MAY AFFECT STRUCTURAL INTEGRITY).
- POLIGON IS NOT RESPONSIBLE FOR UNAUTHORIZED CUTOUTS MADE IN THE FIELD.
- UNAUTHORIZED ELECTRICAL CUTOUTS MADE IN THE FIELD WILL VOID THE SHELTER'S WARRANTY.
- TO ENSURE FLUSH MOUNTING OF AN ELECTRICAL FIXTURE, ROUND COLUMNS WILL BE EQUIPPED WITH A WELDED IN ENCLOSURE THAT ACCOMMODATES A STANDARD UL LISTED BOX.

HOW TO COMMUNICATE CUTOUT REQUIREMENTS
- WHEN ORDERING THE STRUCTURE, MARK UP THE SUBMITTAL DRAWINGS TO ACCURATELY COMMUNICATE CUTOUTS WITH EXACT DIMENSION(S) AND LOCATION(S).
- IF THE SUBMITTAL SET IS NOT AVAILABLE, MARK UP THE SKETCHES ON THIS SHEET SHOWING CUTOUTS WITH EXACT DIMENSION(S) AND LOCATION(S).
- CUTOUT SIZE MUST BE COMMUNICATED AT TIME OF ORDER.
- INDICATE ON WHICH SIDE OF MEMBER THE CUTOUT IS TO BE LOCATED.
- IF NOT SPECIFIED TO THE BOTTOM, CENTER, OR TOP OF CUTOUT, DIMENSION WILL BE TAKEN TO THE BOTTOM OF THE CUTOUT.

WHERE CAN CUTOUTS BE LOCATED?
- OUTLET CUTOUTS ARE TYPICALLY LOCATED 18" ABOVE GRADE ON THE INSIDE FACE OF THE COLUMN.
- LIGHT SWITCH CUTOUTS ARE TYPICALLY LOCATED 48" ABOVE GRADE ON THE INSIDE FACE OF THE COLUMN.
- ALL CUTOUTS ARE TYPICALLY AT LEAST 12" FROM ANY STRUCTURAL JOINTS.
- ALL CUTOUTS ARE TYPICALLY CENTERED ON THE MEMBER WALL (NOT CLOSE TO THE CORNERS).
- CONTACT LOCAL POLIGON REPRESENTATIVE WITH ANY ADDITIONAL QUESTIONS.
- CUTOUTS CAN BE LOCATED THROUGH COVER PLATES.

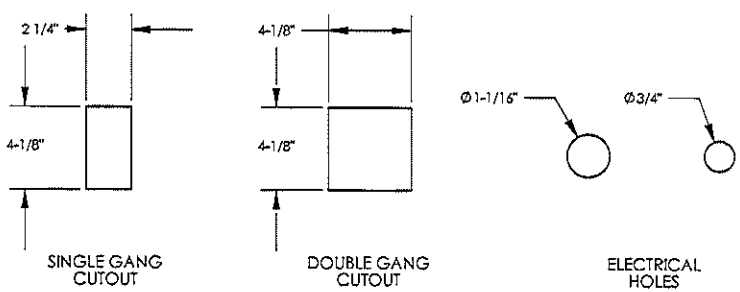

TYPICAL ELECTRICAL CUTOUTS

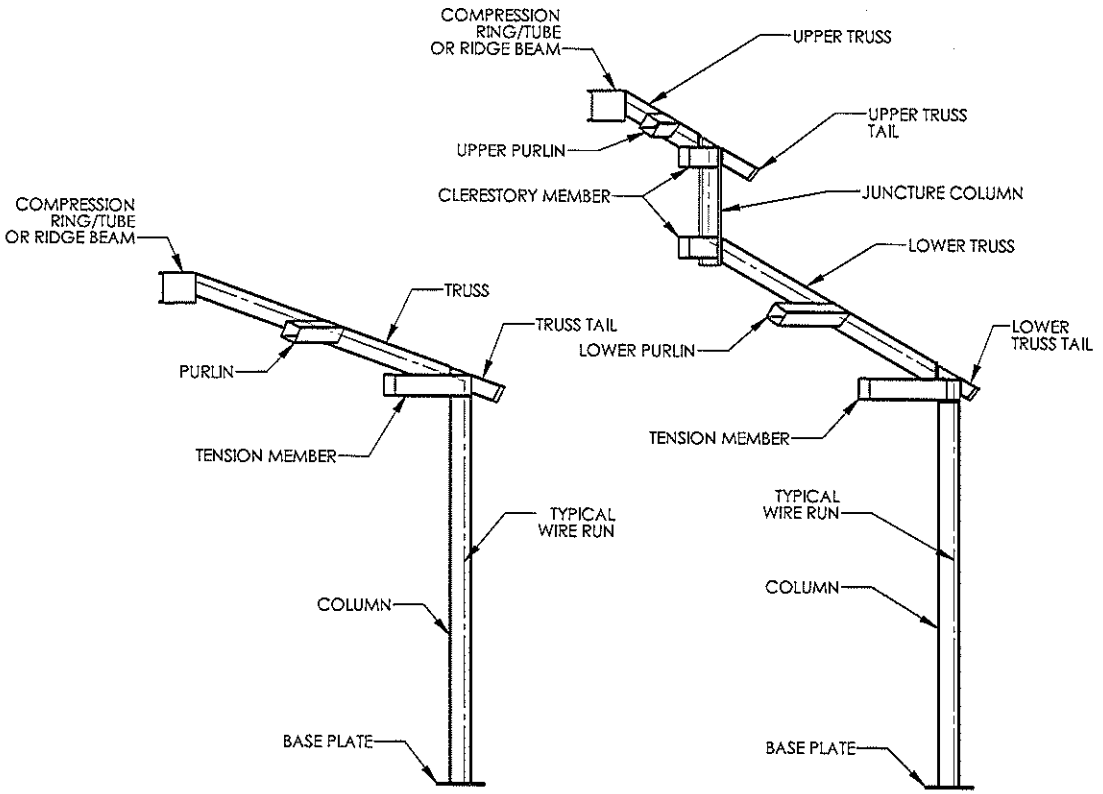

TYPICAL WIRE RUNS

poligon
(616)399-1963
www.poligon.com
by PORTERCORP

COPYRIGHT 2013
PATENTED OR PATENTS PENDING
PORTERCORP 4340 N. 136th AVE HOLLAND, MI 49424

REV LEVEL: A
SCALE: 1:32
DRAWN BY: rallun
PRINT DATE: 7/22/2013
JOB NO: 50713
CAD MODEL: E1-RAM-20-24-TGDS-50713
PROJECT: PALMETTO BAY PARK
PROJECT LOCATION: MIAMI, FL
DRAWING: ELECTRICAL ACCESS AND CUTOUTS
SHEET 5

Tricia Thomas

Subject: FW: 08/09-3 renewal

From: Donna Fish [mailto:Donna.Fish@claycountygov.com]
Sent: Thursday, January 24, 2013 11:18 AM
To: Tricia Thomas
Subject: 08/09-3 renewal

Tricia,

The renewal for RFP 08/09-3 was renewed on January 22, 2013 at the BCC meeting. Minutes will be forthcoming.

Donna Fish, Buyer 1
Clay County Purchasing Division
P O Box 1366
477 Houston St
Green Cove Springs, FL 32043
Ph: 904-278-3761
Fax: 904-278-3728
New email address: donna.fish@claycountygov.com

Under Florida law, e-mail addresses are public records. If you do not want your e-mail address released in response to a public-records request, do not send electronic mail to this entity. Instead, contact this office by phone or in writing. The information contained in this email and/or attachment(s) may be confidential and intended solely for the use of the individual or entity to whom it is addressed. This email and/or attachment(s) may contain material that is privileged or protected from disclosure under applicable law. If you are not the intended recipient or the individual responsible for delivering to the intended recipient, please notify sender immediately by telephone to obtain instructions as to whether information in this email and/or attachment(s) is confidential and privileged or protected from disclosure under applicable law.

D R A F T

MINUTES
BOARD OF COUNTY COMMISSIONERS
CLAY COUNTY
GREEN COVE SPRINGS, FLORIDA
JANUARY 22, 2013

CALL TO ORDER

The Board of County Commissioners met in **Regular Session** in the Commission Meeting Room, County Administration Building, 477 Houston Street, on the above stated date. Chairman Stewart called the meeting to order at 2:10 p.m.

INVOCATION – Commissioner Diane Hutchings

PLEDGE OF ALLEGIANCE – Commissioner Doug Conkey

ROLL CALL

The following were present: Commissioners, Chereese Stewart, Chairman, Wendell D. Davis, Vice-Chairman, Douglas P. Conkey, Diane Hutchings, and Ronnie Robinson; County Manager S. C. Kopelousos, County Attorney Mark Scruby, Chief Assistant County Attorney Fran Moss, and Commission Auditor Mike Price.

ARTWORK

Administrative Assistant Diane Walker presented artwork from Fleming Island High School.

PET ADOPTIONS

Animal Care and Control staff presented pets for adoption.

SPECIAL STAFF RECOGNITION

Chairman Stewart recognized Arnold Weeks, Director of Libraries, and read a resolution commending him on his long and exemplary service to Clay County. The resolution was moved, seconded, and carried unanimously. The Board wished Mr. Weeks best wishes in his retirement.

PROCLAMATION

1. Teen Dating Violence Awareness and Prevention Month
   Commissioner Diane Hutchings read a proclamation into the record designating Teen Dating Violence and Prevention Month. The proclamation was moved, seconded, and carried unanimously. Shanika Hester, Quigley House, accepted the proclamation and commented briefly on services provided.

PRESENTATIONS

2. Robert Christianson, Director, Division of Operations and Land Resources, Re: SJRWMD Lands Assessment Project Update
   Mr. Christianson provided a PowerPoint presentation and answered questions from the Board.

APPROVAL OF MINUTES

3. BCC Meeting of January 8, 2013
   After discussion, Commissioner Davis moved, seconded by Commissioner Hutchings, and **carried 5-0, to approve the minutes.**

CONSENT AGENDA

After discussion, Commissioner Davis moved, seconded by Commissioner Hutchings, and **carried 5-0, to approve the Consent Agenda in its entirety.**

4. Approval of NSP 1 Amendment #5 Package
5. Approval of NSP-1 First Amendment to Developer Agreement between Clay County and NHDC to expand the Scope of Services
6. Approval and Execution of Agreement to provide Annual Report to Clay County regarding Rental Property Owned under NSP-1
7. Approval and Execution of Agreement to provide Annual Report to Clay County regarding Rental Property Owned under NSP-3
8. Approval of Satisfaction of Mortgage for Judith N. Zagurski
9. Approval of Satisfaction of Mortgage for Jamie N. Phillips
10. Approval of Emergency Shelter Grant from HUD to assist with direct client services and operational costs for Quigley House
11. Approval to donate two surplus Sheriff's vehicles to Union Beach, New Jersey Police Department to aid in replacement of police vehicles lost due to Hurricane Sandy
12. Ratification of the Collective Bargaining Agreement between Clay County Board of County Commissioners and the Retail, Wholesale, Department Store Union for the Fiscal Year 2011/2012 in accordance with F.S. Chapter 447
13. Approval of Report and Recommendation regarding civil action against Clay County (Wells Fargo Bank, N.A. v. Chad A. Fleming, et al., Clay County Circuit Court Case No. 2012-2367-CA)
14. Approval of Report and Recommendation regarding civil action against Clay County (Wells Fargo Bank, N.A. v. Shondria T. Weston, et al, Clay County Circuit Court Case No. 12-CA-2511)
15. Finance Business

16. Budget, Finance & Human Services Committee Report of January 14, 2013 (See Attachment #1)
17. Economic Development Committee Report of January 14, 2013 (See Attachment #2)

OLD BUSINESS – No Business

NEW BUSINESS

18. Presentation of Draft Ordinance regulating Mobile Businesses
19. Final Public Hearing to consider Rezoning Z-12-08 from IS (Industrial Select) to IB (Heavy Industrial)
20. Public Hearing to consider Rezoning Application PUD-12-06 from RD-4 and BA to PUD
21. Consideration of approval to establish Zoning Fees for the permitting of Digital Billboards

COUNTY MANAGER/CLERK OF THE BOARD

COUNTY ATTORNEY

22. Request for private meeting in Silva v. Clay County, Florida, U.S. District Court, Middle District of Florida, Case No. 3:13-00003-UATC-TEM
    Chief Assistant County Attorney Fran Moss presented the item and requested a private meeting on January 29th at 4:00 p.m. to discuss the details of this case.

    After discussion, Commissioner Davis moved, seconded by Commissioner Robinson, and **carried 5-0, to approve the item as presented.**

23. Report and Recommendation regarding Joel Edward Chandler V. Clay County, Clay County Circuit Court Case No. 2012-2515 CA

LETTERS FOR ACTION - None

LETTERS FOR INFORMATION

24. Draft Planning Commission Minutes for January 3, 2013

COMMENTS FROM THE PUBLIC

COMMISSIONER'S COMMENTS

ADJOURN
Chairman Stewart adjourned the meeting at 6:15 p.m.

T. Chereese Stewart, Chairman

ATTEST:

S. C. Kopelousos, Clerk of the Board

ATTACHMENT #1

Budget, Finance & Human Services Committee Report
January 14, 2013

The Budget, Finance & Human Services Committee met on Monday, January 14, 2013 at 2:30 p.m. in the BCC Meeting Room. Those in attendance are listed on the attached attendance log. After review and discussion, the committee recommended the following:

ITEM(S) SUBMITTED FOR APPROVAL

1. Recommended approval to post notice of intent and to award Bid No. 12/13-5, Elevator Modernization at the Clay County Sheriff's Office (Elevator C), to Thyssen Krupp Elevator in the amount of $38,251.00. The lowest bidder was not considered because they did not submit a bid bond with their bid. Approval will be effective after 72-hour bid protest period has expired, assuming no protests are received. Submittals are available for review in the Purchasing Division. Funding Source: 102-1204-546100

2. Recommended approval of Second Renewal to RFP #08/09-3, Various Equipment and Amenities for Parks and Playgrounds, to all previous vendors except Play It Safe, who is no longer in business, and Kool Playgrounds, who has chosen not to renew. Many other entities currently utilize this RFP. This renewal will continue to provide discount prices to Clay County and other entities wishing to utilize this RFP. This will effectively extend the bid for a one year period. Funding Sources: Various

3. Recommended approval to post notice of intent and to award Bid No. 12/13-9, Emergency Operations Center UPS Upgrade, to T & M Electric, Inc. in the amount of $19,230.00 Approval will be effective after 72-hour bid protest period has expired, assuming no protests are received. Submittals are available for review in the Purchasing Division. Funding Source: 305-6009-562000

4. Recommended approval to accept Division of Emergency Management, Fiscal Year 2012 State Homeland Security Grant in the amount of $10,923.00, and recommended approval of the accompanying Grant Agreement, to provide funds to the county's Emergency Management Program for training purposes.

PUBLIC COMMENTS: No public comments were made.

There being no further business to come before the committee, the meeting adjourned.

Diane Hutchings
Committee Vice Chair

Angela J. Goodermote
Recording Secretary

Committee Attendance Log
Budget, Finance & Human Services Committee
January 14, 2013

Name	Department/Address	Ext./Phone No.
Diane Hutchings	Commission	x6393
Ronnie Robinson	Commission	x6385
Stephanie Kopelousos	County Manager's Office	x6347
Mark Scruby	County Attorney's Office	x6303
Mike Price	Commission Audit	x3647
Karen Thomas	Administrative & Contractual Services	x3735
Brenda Johns	Purchasing	x6388
Don Moore	Finance Dept	x6332
Lorin Mock	Public Safety Dept	x2768
Kathy Zebraski	Budget Office	x3724
Troy Nagle	MIS	x3771
Jeff Beck	Engineering & Public Works	x3704
Holly Parrish	Economic & Development Services	x3819
Neil Huffstetler	CCSO	264-6512

ATTACHMENT #2

Minutes
Economic Development Committee
January 14, 2013

The Economic Development Committee met on Monday, January 14, 2013 at 3:18 p.m. in the Board of County Commissioners Meeting Room. After review and discussion, the committee recommended the following:

1. Update Regarding Florida Scorecard

   Attached is a series of graphs depicting several key indicators. The information provided is the most recent information available. The data differs from indicator to indicator. In some instances, data is only available for a given year; in others, it is available for a span of years. Additionally, not all Counties have data relevant to the specific indicator. Available data was collected from Baker, Clay, Duval, Flagler, Nassau, Putnam and St. Johns Counties as a comparison.

   The Committee received an update and **Recommended** staff continue to track data accordingly.

2. Discussion Regarding Changes to Development Services Fee Schedule.

   The Committee **Recommended** this item be placed on the BCC Meeting Agenda under New Business at the January 22, 2013 for discussion.

3. Discussion of CIP Changes/Requests;

   County Manager Stephanie Kopelousos informed the Committee that staff was in the process of finalizing various elements to several CIP Projects and will be bringing the Board additional recommendations for additions to the CIP. CIP Projects discussed are as follows: Drainage issues related to Moody Park; Supervisor of Elections Chris Chambless is working with IT Director Troy Nagle regarding the security and camera equipment necessary for the Supervisor of Elections new office building; Working with Supervisor of Elections Chris Chambless regarding the counting equipment in the 2014/2015 CIP in the amount of $400,000 and the possiblility that equipment may be purchased earlier than expected due to the upgrade of technology; Transportation Projects; Property Appraiser Roger Suggs will need to upgrade his software and equipment to accomplish his goals and maintain required responsiblities.

Those in attendance at this meeting are listed on the attached attendance sheet.

With no further business the Committee adjourned at 4:30 p.m.

Wendell Davis, Chairman
Economic Development Committee

Ann Mitchell, Recording Secretary

Economic Development Sign-in Log January 14, 2013	3:18 p.m.
NAME	**Title**
Chairman Wendell Davis	Commissioner
Vice Chair Stewart	Commissioner
Stephanie C. Kopelousos	County Manager
Ronnie Robinson	Commissioner
Diane Hutchings	Commissioner
Mike Price	Commission Auditor
Mark Scruby	County Attorney
Holly Parrish	Economic Development Services Director
Jeff Beck	Engineering & Public Works Director
Troy Nagle	MIS Manager

Bid Form

Price Agreement Contract For
Park and Playground Equipment

Bid No. 08/09-3

Bidder: Rep Services, Inc.

Address: 902 Waterway Place

City, State and Zip: Longwood, FL 32750

Phone: (407) 831-9658 Email: rnelson@cfl.rr.com

Contact Name(s): Ron Nelson

Signature of Bidder

** 2009 catalogs & MSRPs will be supplied when available. **

** Engineered footings/foundations not included with installation. **

MANUFACTURER CATALOGS:

Manufacturer: Landscape Structures, Inc.

Fixed Percentage Discount off MSRP: 2% off plus shipping & handling

Installation (Fixed Percentage of cost after discounts of equipment): 40%

Manufacturer: PorterCorp

Fixed Percentage Discount off MSRP: 2% off plus shipping & handling plus engineered footings/foundations

Installation (Fixed Percentage of cost after discounts of equipment): 53%

Manufacturer: Shade Systems, Inc.

Fixed Percentage Discount off MSRP: 2% off plus shipping & handling plus engineered footings/foundations

Installation (Fixed Percentage of cost after discounts of equipment): 60%

Manufacturer: DuMor, Inc.

Fixed Percentage Discount off MSRP: 2% off plus shipping & handling

Installation (Fixed Percentage of cost after discounts of equipment): 40%

Bid Form

Price Agreement Contract For
Park and Playground Equipment

Bid No. 08/09-3

Bidder: Rep Services, Inc.

Address: 902 Waterway Place

City, State and Zip: Longwood, FL 32750

Phone: (407) 831-9658 Email: rnelson@cfl.rr.com

Contact Name(s): Ron Nelson

Signature of Bidder

** 2009 catalogs & MSRPs will be supplied when available. **

** Engineered footings/foundations not included with installation. **

MANUFACTURER CATALOGS:

Manufacturer: Landscape Brands

Fixed Percentage Discount off MSRP: 2% off plus shipping & handling

Installation (Fixed Percentage of cost after discounts of equipment): 40%

Manufacturer: SofSurfaces

Fixed Percentage Discount off MSRP: 5% off plus shipping & handling

Installation (Fixed Percentage of cost after discounts of equipment): 33%

Manufacturer: ForeverLawn, Inc.

Fixed Percentage Discount off MSRP: 5% off plus shipping & handling

Installation (Fixed Percentage of cost after discounts of equipment): Included (manufacturer installed)

Manufacturer: Robertson Industries

Fixed Percentage Discount off MSRP: 2% off plus shipping & handling

Installation (Fixed Percentage of cost after discounts of equipment): Included (manufacturer installed)

Bid Form

Price Agreement Contract For
Park and Playground Equipment

Bid No. 08/09-3

Bidder: Rep Services, Inc.

Address: 902 Waterway Place

City, State and Zip: Longwood, FL 32750

Phone: (407) 831-9658 Email: rnelson@cfl.rr.com

Contact Name(s): Ron Nelson

_____
Signature of Bidder

** 2009 catalogs & MSRPs will be supplied when available. **

** Engineered footings/foundations not included with installation. **

MANUFACTURER CATALOGS:

Manufacturer: Irvine Wood Recovery

Fixed Percentage Discount off MSRP: 5% off plus shipping & handling

Installation (Fixed Percentage of cost after discounts of equipment): 99%

Manufacturer: Zeager

Fixed Percentage Discount off MSRP: 5% off plus shipping & handling

Installation (Fixed Percentage of cost after discounts of equipment): 99%

Manufacturer: _____

Fixed Percentage Discount off MSRP: _____

Installation (Fixed Percentage of cost after discounts of equipment): _____

Manufacturer: _____

Fixed Percentage Discount off MSRP: _____

Installation (Fixed Percentage of cost after discounts of equipment): _____

poligon® *CLERESTORY SHELTERS CARNIVAL*

RFP NO.08/09-3 Clay County, FL
Various Equipment & Amenities for Parks & Playgrounds
Rep Services, Inc.
902 Waterway Place
Longwood, FL 32750
407-831-9658
www.repservices.com

						FOR USE ON SP OR TG ROOF DECK				
MODEL NO.	LIST PRICE	ANCHOR BOLTS	DEDUCT FOR PRIME PAINT	ADD TO ECOAT/ POWDERCOAT FRAME	ADD TO HOT DIP GALVANIZE FRAME	ADD FOR SHINGLE PKG.	ADD FOR MULTI-RIB METAL ROOFING	ADD FOR STANDING SEAM METAL ROOFING	AREA UNDER ROOF	APPROX WEIGHT
CAR-12SP	$9,546	$208	-$625	$768	$1,369	$482	$2,304	$2,446	144 SF	2,575 lbs
CAR-12MR	$9,396	$208	-$673	$821	$1,476	N/A	N/A	N/A	144 SF	2,070 lbs
CAR-12TG	$8,871	$208	-$673	$821	$1,476	$482	$2,304	$2,446	144 SF	3,150 lbs
CAR-16SP	$11,191	$208	-$726	$887	$1,583	$774	$3,107	$3,411	256 SF	3,390 lbs
CAR-16MR	$10,580	$208	-$774	$946	$1,690	N/A	N/A	N/A	256 SF	2,530 lbs
CAR-16TG	$10,152	$208	-$774	$946	$1,690	$774	$3,107	$3,411	256 SF	4,370 lbs
CAR-20SP	$12,161	$208	-$821	$1,006	$1,798	$946	$3,744	$4,321	400 SF	4,195 lbs
CAR-20MR	$11,105	$208	-$887	$1,083	$1,935	N/A	N/A	N/A	400 SF	3,015 lbs
CAR-20TG	$10,698	$208	-$887	$1,083	$1,935	$946	$3,744	$4,321	400 SF	5,440 lbs
CAR-24SP	$15,729	$208	-$1,143	$1,399	$2,506	$1,286	$4,827	$5,893	576 SF	5,690 lbs
CAR-24MR	$14,116	$208	-$1,208	$1,476	$2,268	N/A	N/A	N/A	576 SF	4,110 lbs
CAR-24TG	$13,730	$208	-$1,208	$1,476	$2,268	$1,286	$4,827	$5,893	576 SF	7,240 lbs
CAR-30SP	$26,143	$208	-$2,363	$2,887	$4,446	$2,030	$6,440	$7,976	900 SF	10,150 lbs
CAR-30MR	$23,555	$208	-$2,429	$2,964	$4,565	N/A	N/A	N/A	900 SF	7,710 lbs
CAR-30TG	$23,330	$208	-$2,429	$2,964	$4,565	$2,030	$6,440	$7,976	900 SF	12,490 lbs
CAR-40SP	$43,886	$208	-$4,482	$5,482	$7,571	$3,327	$9,976	$12,071	1600 SF	18,425 lbs
CAR-40MR	$39,279	$208	-$4,548	$5,560	$7,679	N/A	N/A	N/A	1600 SF	14,130 lbs
CAR-40TG	$39,343	$208	-$4,548	$5,560	$7,679	$3,327	$9,976	$12,071	1600 SF	22,165 lbs

LIST PRICE INCLUDES:
POWDER COATED FRAME
NO HANDRAILS OR ORNAMENTATION. IF ACCESSORIES ARE DESIRED, CONTACT FACTORY FOR QUOTE.

Prices based on 100 MPH wind speed, higher velocities will be quoted based on enginneering requirements.
Signed Sealed Drawings and Calculation Books are priced by project. Shipping and handling by quote.

poligon® *CLERESTORY SHELTERS CHELSEA*

RFP NO.08/09-3 Clay County, FL
Various Equipment & Amenities for Parks & Playgrounds
Rep Services, Inc.
902 Waterway Place
Longwood, FL 32750
407-831-9658
www.repservices.com

						FOR USE ON SP OR TG ROOF DECK				
MODEL NO.	LIST PRICE	ANCHOR BOLTS	DEDUCT FOR PRIME PAINT	ADD TO ECOAT/ POWDERCOAT FRAME	ADD TO HOT DIP GALVANIZE FRAME	ADD FOR SHINGLE PKG.	ADD FOR MULTI-RIB METAL ROOFING	ADD FOR STANDING SEAM METAL ROOFING	AREA UNDER ROOF	APPROX WEIGHT
CHE-20x24SP	$16,704	$208	-$1,554	$1,899	$2,929	$1,286	$2,393	$3,571	480 SF	6,530 lbs
CHE-20x24MR	$15,825	$208	-$1,643	$2,012	$3,095	N/A	N/A	N/A	480 SF	4,720 lbs
CHE-20x24TG	$16,671	$208	-$1,643	$2,012	$3,095	$1,286	$2,393	$3,571	480 SF	7,725 lbs
CHE-20x34SP	$22,527	$208	-$2,298	$2,810	$4,321	$1,720	$3,351	$4,506	480 SF	9,435 lbs
CHE-20x34MR	$20,636	$208	-$2,387	$2,917	$4,488	N/A	N/A	N/A	680 SF	6,845 lbs
CHE-20x34TG	$21,761	$208	-$2,387	$2,917	$4,488	$1,720	$3,351	$4,506	680 SF	10,970 lbs
CHE-20x44SP	$28,688	$292	-$2,732	$3,333	$5,137	$2,161	$3,988	$5,333	480 SF	11,560 lbs
CHE-20x44MR	$25,848	$292	-$2,821	$3,446	$5,304	N/A	N/A	N/A	880 SF	8,145 lbs
CHE-20x44TG	$27,380	$292	-$2,821	$3,446	$5,304	$2,161	$3,988	$5,333	880 SF	13,445 lbs
CHE-24x24SP	$18,327	$208	-$1,720	$2,101	$3,232	$1,440	$2,601	$3,786	680 SF	7,375 lbs
CHE-24x24MR	$16,902	$208	-$1,810	$2,208	$3,399	N/A	N/A	N/A	576 SF	5,200 lbs
CHE-24x24TG	$17,995	$208	-$1,810	$2,208	$3,399	$1,440	$2,601	$3,786	576 SF	8,720 lbs
CHE-24x34SP	$24,970	$208	-$2,571	$3,143	$4,833	$1,875	$3,595	$4,815	680 SF	10,690 lbs
CHE-24x34MR	$22,827	$208	-$2,708	$3,310	$5,089	N/A	N/A	N/A	816 SF	7,765 lbs
CHE-24x34TG	$24,263	$208	-$2,708	$3,310	$5,089	$1,875	$3,595	$4,815	816 SF	12,560 lbs
CHE-24x44SP	$31,371	$292	-$2,988	$3,655	$5,625	$2,500	$4,363	$5,738	680 SF	12,980 lbs
CHE-24x44MR	$27,600	$292	-$3,077	$3,762	$5,792	N/A	N/A	N/A	1056 SF	8,930 lbs
CHE-24x44TG	$29,646	$292	-$3,077	$3,762	$5,792	$2,500	$4,363	$5,738	1056 SF	15,245 lbs

LIST PRICE INCLUDES:
POWDER COATED FRAME
NO HANDRAILS OR ORNAMENTATION. IF ACCESSORIES ARE DESIRED, CONTACT FACTORY FOR QUOTE.

Prices based on 100 MPH wind speed, higher velocities will be quoted based on enginneering requirements.
Signed Sealed Drawings and Calculation Books are priced by project. Shipping and handling by quote.

poligon® *CROSSING*

RFP NO.08/09-3 Clay County, FL
Various Equipment & Amenities for Parks & Playgrounds
Rep Services, Inc.
902 Waterway Place
Longwood, FL 32750
407-831-9658
www.repservices.com

						MEDALLION AND ARCH ORNAMENTATION (EACH GABLE)				FOR USE ON SP OR TG ROOF DECK						
MODEL NO.	LIST PRICE	ANCHOR BOLTS	DEDUCT FOR PRIME PAINT	ADD TO ECOAT/ POWDER COAT FRAME	ADD TO HOT DIP GALVANIZE FRAME	MEDALLION AND ARCH	MEDALLION AND ARCH WEIGHT	ADD TO ECOAT POWDER COAT	ADD TO HOT DIP GALVANIZE	ADD FOR SHINGLE PKG.	ADD FOR MULTI-RIB METAL ROOFING	ADD FOR STANDING SEAM METAL ROOFING	CUPOLA MODEL	CUPOLA LIST	AREA UNDER ROOF	APPROX WEIGHT
CRS-12SP	$10,357	$208	-$1,054	$1,292	$2,315	$1,464	235	$185	$405	$286	$2,542	$3,565	S3018M12	$2,762	144 SF	3,825 lbs
CRS-12MR	$10,643	$208	-$1,054	$1,292	$2,315	$1,464	100	$77	$173	N/A	N/A	N/A	S3018M12	$2,762	144 SF	3,250 lbs
CRS-12TG	$9,560	$208	-$1,054	$1,292	$2,315	$1,464	100	$77	$173	$286	$2,542	$3,565	S3018M12	$2,762	144 SF	4,230 lbs
CRS-16SP	$13,179	$208	-$1,321	$1,613	$2,482	$1,780	275	$214	$470	$446	$3,810	$4,893	S4024M12	$2,762	256 SF	5,185 lbs
CRS-16MR	$13,250	$208	-$1,321	$1,613	$2,482	$1,780	275	$214	$470	N/A	N/A	N/A	S4024M12	$2,762	256 SF	4,185 lbs
CRS-16TG	$12,060	$208	-$1,321	$1,613	$2,482	$1,780	275	$214	$470	$446	$3,810	$4,893	S4024M12	$2,762	256 SF	6,045 lbs
CRS-20SP	$17,857	$208	-$1,804	$2,208	$3,393	$2,304	315	$244	$542	$637	$5,018	$6,512	S4628M12	$2,762	400 SF	7,335 lbs
CRS-20MR	$17,524	$208	-$1,804	$2,208	$3,393	$2,304	315	$244	$542	N/A	N/A	N/A	S4628M12	$2,762	400 SF	5,765 lbs
CRS-20TG	$16,179	$208	-$1,804	$2,208	$3,393	$2,304	315	$244	$542	$637	$5,018	$6,512	S4628M12	$2,762	400 SF	8,620 lbs
CRS-24SP	$23,607	$208	-$2,381	$2,905	$4,476	$2,423	355	$280	$613	$887	$6,643	$8,667	S4628M12	$2,762	576 SF	9,820 lbs
CRS-24MR	$23,179	$208	-$2,381	$2,905	$4,476	$2,423	355	$280	$613	N/A	N/A	N/A	S4628M12	$2,762	576 SF	7,715 lbs
CRS-24TG	$21,345	$208	-$2,381	$2,905	$4,476	$2,423	355	$280	$613	$887	$6,643	$8,667	S4628M12	$2,762	576 SF	11,610 lbs
CRS-29SP	$32,595	$208	-$3,333	$4,065	$6,262	$2,464	405	$315	$696	$1,298	$9,071	$11,571	S5836M12	$2,762	841 SF	13,805 lbs
CRS-29MR	$31,607	$208	-$3,333	$4,065	$6,262	$2,464	405	$315	$696	N/A	N/A	N/A	S5836M12	$2,762	841 SF	10,760 lbs
CRS-29TG	$29,405	$208	-$3,333	$4,065	$6,262	$2,464	405	$315	$696	$1,298	$9,071	$11,571	S5836M12	$2,762	841 SF	16,325 lbs

List price includes: Powder Coated Frame with Open Gables
Gable Ornamentation and Cupola Not Included

Prices based on 100 MPH wind speed, higher velocities will be quoted based on enginneering requirements.
Signed Sealed Drawings and Calculation Books are priced by project. Shipping and handling by quote.

poligon® *DUGOUT*

RFP NO.08/09-3 Clay County, FL
Various Equipment & Amenities for Parks & Playgrounds
Rep Services, Inc.
902 Waterway Place
Longwood, FL 32750
407-831-9658
www.repservices.com

MODEL NO.	LIST PRICE	Anchor Bolts	DEDUCT FOR PRIME PAINT	ADD TO ECOAT/ POWDERCOAT FRAME	ADD TO HOT DIP GALVANIZE FRAME	BENCHES WITH BACKS	BACKLESS BENCHES	AREA UNDER ROOF	APPROX WEIGHT
DUG-CC-12-1MR	$4,821	$107	-$381	$464	$923	$2,446	$2,012	90	1,130 lbs
DUG-CC-12-2MR	$8,351	$155	-$664	$804	$1,446	$3,774	$3,268	180	1,990 lbs
DUG-CC-12-3MR	$11,673	$208	-$943	$1,149	$2,065	$5,095	$4,524	270	2,845 lbs
DUG-CC-16-1MR	$5,458	$107	-$438	$530	$952	$2,815	$2,345	120	1,340 lbs
DUG-CC-16-2MR	$9,405	$155	-$774	$940	$1,690	$4,143	$3,685	240	2,370 lbs
DUG-CC-16-3MR	$13,351	$208	-$1,110	$1,357	$2,429	$5,464	$5,024	360	3,410 lbs
DUG-CC-20-1MR	$5,994	$107	-$491	$601	$1,077	$3,565	$2,905	150	1,520 lbs
DUG-CC-20-2MR	$10,565	$155	-$884	$1,077	$1,935	$5,274	$4,560	300	2,755 lbs
DUG-CC-20-3MR	$15,042	$208	-$1,277	$1,560	$2,399	$6,976	$6,214	450	3,965 lbs
DUG-OC-12-1MR	$4,280	$107	-$354	$435	$863	$2,446	$2,012	90	1,065 lbs
DUG-OC-12-2MR	$7,298	$155	-$607	$744	$1,333	$3,774	$3,268	180	1,855 lbs
DUG-OC-12-3MR	$10,310	$208	-$863	$1,048	$1,887	$5,095	$4,524	270	2,635 lbs
DUG-OC-16-1MR	$4,815	$107	-$402	$482	$875	$2,815	$2,345	120	1,245 lbs
DUG-OC-16-2MR	$8,232	$155	-$699	$851	$1,530	$4,143	$3,685	240	2,180 lbs
DUG-OC-16-3MR	$11,696	$208	-$997	$1,220	$2,185	$5,464	$5,024	360	3,120 lbs
DUG-OC-20-1MR	$5,250	$107	-$446	$542	$970	$3,565	$2,905	150	1,400 lbs
DUG-OC-20-2MR	$9,185	$155	-$789	$964	$1,732	$5,274	$4,560	300	2,510 lbs
DUG-OC-20-3MR	$13,042	$208	-$1,134	$1,381	$2,482	$6,976	$6,214	450	3,600 lbs

LIST PRICE INCLUDES:
POWDER COATED FRAME
NOTE: BENCHES ARE MANUFACTURED WITH STEEL FRAMES AND DURAWOOD RECYCLED ENGINEERED PLASTIC LUMBER

Prices based on 100 MPH wind speed, higher velocities will be quoted based on enginneering requirements.
Signed Sealed Drawings and Calculation Books are priced by project. Shipping and handling by quote.

poligon® *SPECIALTY SHELTERS*

RFP NO.08/09-3 Clay County, FL
Various Equipment & Amenities for Parks & Playgrounds
Rep Services, Inc.
902 Waterway Place
Longwood, FL 32750
407-831-9658
www.repservices.com

						FOR USE ON SP OR TG ROOF DECK				
MODEL NO.	LIST PRICE	ANCHOR BOLTS	DEDUCT FOR PRIME PAINT	ADD TO ECOAT/ POWDERCOAT FRAME	ADD TO HOT DIP GALVANIZE FRAME	ADD FOR SHINGLE PKG.	ADD FOR MULTI-RIB METAL ROOFING	ADD FOR STANDING SEAM METAL ROOFING	AREA UNDER ROOF	APPROX WEIGHT
DTS-20X40MR	$20,792	$125	-$1,954	$2,387	$3,673	N/A	N/A	N/A	700 SF	5,800 lbs
DTS-30X60MR	$68,619	$125	-$8,427	$10,298	$14,232	N/A	N/A	N/A	1575 SF	22,675 lbs
STS-20MR	$15,155	$83	-$1,506	$1,833	$2,827	N/A	N/A	N/A	300 SF	4,145 lbs
STS-30MR	$36,631	$83	-$1,940	$2,369	$3,649	N/A	N/A	N/A	675 SF	5,725 lbs
FTSSP	$3,696		-$235	$286	$571	$179	$1,006	$1,262	49 SF	1,035 lbs
FTSMR	$3,208		-$235	$286	$571	N/A	N/A	N/A	49 SF	760 lbs
TRX-16MR	$7,964	$167	-$679	$833	$1,488	N/A	N/A	N/A	260 SF	2,015 lbs
TRX-20MR	$9,750	$167	-$911	$1,113	$2,000	N/A	N/A	N/A	375 SF	2,755 lbs
KSK-4 3 Col.MR	$7,958	$77	-$247	$1,018	$595	N/A	N/A	N/A	25 SF	780 lbs
PTE-HC1MR	$6,107	$208	-$482	$583	$1,048	N/A	N/A	N/A	81 SF	1,550 lbs
PTE-HC2MR	$10,036	$208	-$732	$899	$1,607	N/A	N/A	N/A	144 SF	2,260 lbs

LIST PRICE INCLUDES:
POWDER COATED FRAME
KSK-4 3 Col. price also includes (3) enclosed locking display cases
FT - DURAWOOD RECYCLED PLASTIC LUMBER table and benches standard, metal table and benches by others.

Prices based on 100 MPH wind speed, higher velocities will be quoted based on enginneering requirements.
Signed Sealed Drawings and Calculation Books are priced by project. Shipping and handling by quote.

poligon® *IRONWOOD GAZEBOS*

RFP NO.08/09-3 Clay County, FL
Various Equipment & Amenities for Parks & Playgrounds
Rep Services, Inc.
902 Waterway Place
Longwood, FL 32750
407-831-9658
www.repservices.com

						FOR USE ON SP OR TG ROOF DECK					
MODEL NO.	LIST PRICE	ANCHOR BOLTS	DEDUCT FOR PRIME PAINT	ADD TO ECOAT/ POWDERCOAT FRAME	ADD TO HOT DIP GALVANIZE FRAME/RAIL/ORN	ADD FOR SHINGLE PKG.	ADD FOR MULTI-RIB METAL ROOFING	ADD FOR STANDING SEAM METAL ROOFING	CUPOLA INCLUDED	AREA UNDER ROOF	APPROX WEIGHT
GWI-16SP	$16,321	$292	-$940	$1,143	$2,054	$452	$2,226	$2,583	H2013M19 (sheet metal)	167 SF	3,335 lbs
GWI-16MR	$15,845	$292	-$946	$1,161	$2,077	N/A	N/A	N/A	H2013M19 (sheet metal)	167 SF	2,750 lbs
GWI-16TG	$15,595	$292	-$946	$1,161	$2,077	$452	$2,226	$2,583	H2013M19 (sheet metal)	167 SF	3,960 lbs
GWI-20SP	$20,292	$292	-$1,176	$1,435	$2,214	$619	$2,768	$3,768	H2013M19 (sheet metal)	260 SF	4,505 lbs
GWI-20MR	$19,304	$292	-$1,182	$1,446	$2,226	N/A	N/A	N/A	H2013M19 (sheet metal)	260 SF	3,550 lbs
GWI-20TG	$19,196	$292	-$1,182	$1,446	$2,226	$619	$2,768	$3,768	H2013M19 (sheet metal)	260 SF	5,515 lbs
GWI-24SP	$24,738	$292	-$1,446	$1,762	$2,714	$1,048	$4,137	$5,405	H3119M19 (sheet metal)	375 SF	5,845 lbs
GWI-24MR	$23,107	$292	-$1,452	$1,774	$2,732	N/A	N/A	N/A	H3119M19 (sheet metal)	375 SF	4,405 lbs
GWI-24TG	$23,286	$292	-$1,452	$1,774	$2,732	$1,048	$4,137	$5,405	H3119M19 (sheet metal)	375 SF	7,350 lbs
GWI-33SP	$41,399	$292	-$2,777	$3,399	$5,226	$1,786	$6,393	$8,810	H3119M19 (sheet metal)	708 SF	11,005 lbs
GWI-33MR	$38,339	$292	-$2,789	$3,405	$5,238	N/A	N/A	N/A	H3119M19 (sheet metal)	708 SF	8,410 lbs
GWI-33TG	$39,065	$292	-$2,789	$3,405	$5,238	$1,786	$6,393	$8,810	H3119M19 (sheet metal)	708 SF	13,820 lbs
GWI-42SP	$47,024	$292	-$2,893	$3,530	$5,435	$2,732	$9,726	$12,024	H5424W7 (wood vented)	1146 SF	13,240 lbs
GWI-42MR	$42,607	$292	-$2,899	$3,542	$5,452	N/A	N/A	N/A	H4822V6 (frame vented)	1146 SF	9,270 lbs
GWI-42TG	$43,488	$292	-$2,899	$3,542	$5,452	$2,732	$9,726	$12,024	H5424W7 (wood vented)	1146 SF	17,315 lbs
GWI-60SP	$87,970	$292	-$6,717	$8,208	$11,345	$6,589	$18,792	$25,125	H5424W7 (wood vented)	2339 SF	29,735 lbs
GWI-60MR	$80,280	$292	-$6,729	$8,220	$11,363	N/A	N/A	N/A	H4822V6 (frame vented)	2339 SF	21,430 lbs
GWI-60TG	$81,137	$292	-$6,729	$8,220	$11,363	$6,589	$18,792	$25,125	H5424W7 (wood vented)	2339 SF	38,350 lbs

List price includes:
Powder Coated frame
Ecoated and Powder Coated Diamond Pattern package: 5 sides handrail, 6 sides overhead ornamentation
Cupola (see "CUPOLA INCLUDED" field)

*Railing and ornamentation package will be Ecoated and Powder Coated.

Prices based on 100 MPH wind speed, higher velocities will be quoted based on enginneering requirements.
Signed Sealed Drawings and Calculation Books are priced by project. Shipping and handling by quote.

poligon®

CARMEL SERIES OCTAGON GAZEBOS

RFP NO.08/09-3 Clay County, FL
Various Equipment & Amenities for Parks & Playgrounds
Rep Services, Inc.
902 Waterway Place
Longwood, FL 32750
407-831-9658
www.repservices.com

						FOR USE ON SP OR TG ROOF DECK				
MODEL NO.	LIST PRICE	ANCHOR BOLTS	DEDUCT FOR PRIME PAINT	ADD TO ECOAT/ POWDERCOAT FRAME	ADD TO HOT DIP GALVANIZE FRAME/RAIL/ORN	ADD FOR SHINGLE PKG.	ADD FOR MULTI-RIB METAL ROOFING	ADD FOR STANDING SEAM METAL ROOFING	AREA UNDER ROOF	APPROX WEIGHT
GCO-19SP	$25,489	$375	-$1,476	$1,810	$2,780	$619	$3,988	$3,601	256 SF	5,160 lbs
GCO-19MR	$26,518	$375	-$1,518	$1,857	$2,857	N/A	N/A	N/A	256 SF	4,385 lbs
GCO-19TG	$25,136	$375	-$1,518	$1,857	$2,857	$619	$3,988	$3,601	256 SF	5,850 lbs
GCO-23SP	$27,777	$375	-$1,598	$1,952	$3,000	$786	$4,964	$4,613	375 SF	5,905 lbs
GCO-23MR	$28,741	$375	-$1,640	$2,000	$3,077	N/A	N/A	N/A	375 SF	4,855 lbs
GCO-23TG	$27,091	$375	-$1,640	$2,000	$3,077	$786	$4,964	$4,613	375 SF	6,725 lbs
GCO-27SP	$39,471	$375	-$2,833	$3,464	$5,327	$1,071	$6,006	$5,696	516 SF	9,650 lbs
GCO-27MR	$40,286	$375	-$2,899	$3,542	$5,452	N/A	N/A	N/A	516 SF	8,280 lbs
GCO-27TG	$38,550	$375	-$2,899	$3,542	$5,452	$1,071	$6,006	$5,696	516 SF	10,905 lbs
GCO-31SP	$44,963	$375	-$3,295	$4,030	$6,202	$1,399	$7,161	$6,917	680 SF	11,370 lbs
GCO-31MR	$45,621	$375	-$3,351	$4,095	$6,304	N/A	N/A	N/A	680 SF	9,650 lbs
GCO-31TG	$43,682	$375	-$3,351	$4,095	$6,304	$1,399	$7,161	$6,917	680 SF	13,000 lbs
GCO-39SP	$67,307	$375	-$4,994	$6,101	$8,429	$2,429	$10,613	$11,185	1076 SF	17,460 lbs
GCO-39MR	$67,050	$375	-$5,089	$6,220	$8,595	N/A	N/A	N/A	1076 SF	14,380 lbs
GCO-39TG	$64,875	$375	-$5,089	$6,220	$8,595	$2,429	$10,613	$11,185	1076 SF	20,005 lbs
GCO-47SP	$82,050	$375	-$6,506	$7,946	$10,982	$3,417	$13,619	$14,667	1562 SF	23,185 lbs
GCO-47MR	$80,689	$375	-$6,601	$8,065	$11,143	N/A	N/A	N/A	1562 SF	18,815 lbs
GCO-47TG	$78,289	$375	-$6,601	$8,065	$11,143	$3,417	$13,619	$14,667	1562 SF	26,595 lbs
GCO-57SP	$108,654	$375	-$8,821	$10,774	$14,893	$5,018	$17,815	$20,071	2298 SF	31,865 lbs
GCO-57MR	$105,975	$375	-$8,929	$10,911	$15,077	N/A	N/A	N/A	2298 SF	25,620 lbs
GCO-57TG	$103,211	$375	-$8,929	$10,911	$15,077	$5,018	$17,815	$20,071	2298 SF	36,905 lbs

List price includes:
Powder Coated frame, Ecoated and Powder Coated rail/orn package (see below)
6 sides Carmel Pattern handrail, 8 sides Carmel Pattern overhead and upper ornamentation
GOC 16-24 O2713M18 (small sheet metal) cupola.
GOC 28-54 O3324M18 (sheet metal) cupola.

GOC-24 Not shown in catalog

*Railing and ornamentation package will be Ecoated and Powder Coated.

Prices based on 100 MPH wind speed, higher velocities will be quoted based on enginneering requirements.
Signed Sealed Drawings and Calculation Books are priced by project. Shipping and handling by quote.

poligon® *OXFORD GAZEBOS*

RFP NO.08/09-3 Clay County, FL
Various Equipment & Amenities for Parks & Playgrounds
Rep Services, Inc.
902 Waterway Place
Longwood, FL 32750
407-831-9658
www.repservices.com

						FOR USE ON SP OR TG ROOF DECK				
MODEL NO.	LIST PRICE	ANCHOR BOLTS	DEDUCT FOR PRIME PAINT	ADD TO ECOAT/ POWDERCOAT FRAME	ADD TO HOT DIP GALVANIZE FRAME/RAIL/ORN	ADD FOR SHINGLE PKG.	ADD FOR MULTI-RIB METAL ROOFING	ADD FOR STANDING SEAM METAL ROOFING	AREA UNDER ROOF	APPROX WEIGHT
GXO-14SP	$12,980	$292	-$842	$1,024	$1,839	$429	$1,696	$2,083	128 SF	3,240 lbs
GXO-14MR	$12,616	$292	-$842	$1,024	$1,839	N/A	N/A	N/A	128 SF	2,640 lbs
GXO-14TG	$12,413	$292	-$842	$1,024	$1,839	$429	$1,696	$2,083	128 SF	3,485 lbs
GXO-18SP	$15,563	$292	-$1,057	$1,292	$2,315	$577	$2,417	$2,756	211 SF	4,275 lbs
GXO-18MR	$15,568	$292	-$1,101	$1,339	$2,405	N/A	N/A	N/A	211 SF	3,505 lbs
GXO-18TG	$15,568	$292	-$1,101	$1,339	$2,405	$577	$2,417	$2,756	211 SF	4,960 lbs
GXO-22SP	$18,016	$292	-$1,193	$1,458	$2,244	$845	$3,131	$3,762	315 SF	5,175 lbs
GXO-22MR	$18,021	$292	-$1,262	$1,542	$2,369	N/A	N/A	N/A	315 SF	4,165 lbs
GXO-22TG	$17,989	$292	-$1,262	$1,542	$2,369	$845	$3,131	$3,762	315 SF	6,165 lbs
GXO-28SP	$30,943	$292	-$2,268	$2,768	$4,262	$1,179	$5,173	$5,321	510 SF	9,060 lbs
GXO-28MR	$29,561	$292	-$2,268	$2,768	$4,262	N/A	N/A	N/A	510 SF	7,415 lbs
GXO-28TG	$29,111	$292	-$2,268	$2,768	$4,262	$1,179	$5,173	$5,321	510 SF	10,420 lbs
GXO-32SP	$35,582	$292	-$2,542	$3,101	$4,780	$1,476	$6,774	$6,440	666 SF	10,575 lbs
GXO-32MR	$34,221	$292	-$2,542	$3,101	$4,780	N/A	N/A	N/A	666 SF	8,695 lbs
GXO-32TG	$33,311	$292	-$2,542	$3,101	$4,780	$1,476	$6,774	$6,440	666 SF	12,310 lbs
GXO-40SP	$47,443	$292	-$3,554	$4,339	$6,685	$2,292	$9,173	$9,327	1040 SF	17,895 lbs
GXO-40MR	$48,493	$292	-$3,881	$4,738	$6,548	N/A	N/A	N/A	1040 SF	15,880 lbs
GXO-40TG	$47,561	$292	-$3,881	$4,738	$6,548	$2,292	$9,173	$9,327	1040 SF	21,430 lbs
GXO-48SP	$59,984	$292	-$5,015	$6,131	$8,470	$3,363	$12,679	$12,155	1497 SF	24,670 lbs
GXO-48MR	$60,916	$292	-$5,432	$6,637	$9,173	N/A	N/A	N/A	1497 SF	21,815 lbs
GXO-48TG	$59,352	$292	-$5,432	$6,637	$9,173	$3,363	$12,679	$12,155	1497 SF	29,405 lbs
GXO-58SP	$83,218	$292	-$6,577	$8,036	$11,107	$5,006	$17,690	$16,244	2185 SF	33,305 lbs
GXO-58MR	$81,557	$292	-$6,911	$8,446	$11,673	N/A	N/A	N/A	2185 SF	28,795 lbs
GXO-58TG	$79,211	$292	-$6,911	$8,446	$11,673	$5,006	$17,690	$16,244	2185 SF	39,425 lbs
GXO-64SP	$85,779	$292	-$6,393	$7,810	$10,792	$6,238	$20,512	$19,381	2661 SF	34,070 lbs
GXO-64MR	$83,866	$292	-$7,068	$8,643	$11,940	N/A	N/A	N/A	2661 SF	29,135 lbs
GXO-64TG	$81,477	$292	-$7,068	$8,643	$11,940	$6,238	$20,512	$19,381	2661 SF	42,090 lbs

List price includes:
Powder Coated frame, Ecoated and Powder Coated rail/orn package (see below)
GXO 14-22: 5 sides Diamond Pattern handrail, 6 sides Diamond Pattern overhead ornamentation, H4818F12 (steel framed) cupola
GXO 28-48: 5 sides Diamond Pattern handrail, 6 sides Diamond Pattern overhead and upper ornamentation, H3119M19 (sheet metal) Cupola
GXO 58-64: 5 sides Diamond Pattern handrail, 6 sides Diamond Pattern overhead and upper ornamentation, H4822V6 (steel frame) Cupola

*Railing and ornamentation package will be Ecoated and Powder Coated .

Prices based on 100 MPH wind speed, higher velocities will be quoted based on enginneering requirements.
Signed Sealed Drawings and Calculation Books are priced by project. Shipping and handling by quote.

poligon® *SAN JOSE GAZEBOS*

RFP NO.08/09-3 Clay County, FL
Various Equipment & Amenities for Parks & Playgrounds
Rep Services, Inc.
902 Waterway Place
Longwood, FL 32750
407-831-9658
www.repservices.com

MODEL NO.	LIST PRICE	ANCHOR BOLTS	AREA UNDER ROOF	APPROX WEIGHT
GSJ-16SPSS	$40,821	$375	182 SF	6,205 lbs
GSJ-20SPSS	$45,881	$375	283 SF	7,530 lbs
GSJ-30SPSS	$62,429	$375	637 SF	12,180 lbs

List price includes the following SPECIAL FEATURES:
1. San Jose style railing and ornamentation package.
2. Powder coated frame and railing and ornamentation package.
3. Dual premium roof deck/roofing system which consists of
   Structural Insulated Panel roof deck with standing seam metal roofing.

Note: It is recommended that the underside of the SIP panel be stained or sealed on site prior to installation.
Powder coated frame and railing components should be handled carefully and may require field touch up.
(Poligon will provide touch up paint.)

Prices based on 100 MPH wind speed, higher velocities will be quoted based on enginneering requirements.
Signed Sealed Drawings and Calculation Books are priced by project. Shipping and handling by quote.

poligon® *GATEWAY*

RFP NO.08/09-3 Clay County, FL
Various Equipment & Amenities for Parks & Playgrounds
Rep Services, Inc.
902 Waterway Place
Longwood, FL 32750
407-831-9658
www.repservices.com

						FOR USE ON SP OR TG ROOF DECK				
MODEL NO.	LIST PRICE	ANCHOR BOLTS	DEDUCT FOR PRIME PAINT	ADD TO ECOAT/ POWDERCOAT FRAME	ADD TO HOT DIP GALVANIZE FRAME	ADD FOR SHINGLE PKG.	ADD FOR MULTI-RIB METAL ROOFING	ADD FOR STANDING SEAM METAL ROOFING	AREA UNDER ROOF	APPROX WEIGHT
GTW-7x7SP	$6,524	$208	-$512	$619	$1,113	$133	$872	$946	853 SF	3,015 lbs
GTW-7x7MR	$6,250	$208	-$512	$619	$1,113	N/A	N/A	N/A	853 SF	2,890 lbs
GTW-7x7TG	$6,369	$208	-$512	$619	$1,113	$133	$872	$946	853 SF	2,945 lbs
GTW-11x11SP	$8,012	$208	-$607	$732	$1,315	$305	$1,334	$1,553	1,010 SF	3,705 lbs
GTW-11x11MR	$7,369	$208	-$607	$732	$1,315	N/A	N/A	N/A	1,010 SF	3,410 lbs
GTW-11x11TG	$7,655	$208	-$607	$732	$1,315	$305	$1,334	$1,553	1,010 SF	3,540 lbs
GTW-15x15SP	$11,500	$208	-$929	$1,131	$2,024	$483	$2,006	$2,304	1,552 SF	5,320 lbs
GTW-15x15MR	$10,595	$208	-$929	$1,131	$2,024	N/A	N/A	N/A	1,552 SF	4,900 lbs
GTW-15x15TG	$10,917	$208	-$929	$1,131	$2,024	$483	$2,006	$2,304	1,552 SF	5,050 lbs
GTW-19x19SP	$16,238	$208	-$1,423	$1,738	$2,673	$696	$2,885	$3,250	2,388 SF	7,515 lbs
GTW-19x19MR	$14,655	$208	-$1,423	$1,738	$2,673	N/A	N/A	N/A	2,388 SF	6,780 lbs
GTW-19x19TG	$15,345	$208	-$1,423	$1,738	$2,673	$696	$2,885	$3,250	2,388 SF	7,100 lbs
GTW-23x23SP	$21,476	$208	-$1,923	$2,351	$3,619	$979	$3,902	$4,427	3,228 SF	9,935 lbs
GTW-23x23MR	$19,262	$208	-$1,923	$2,351	$3,619	N/A	N/A	N/A	3,228 SF	8,915 lbs
GTW-23x23TG	$19,940	$208	-$1,923	$2,351	$3,619	$979	$3,902	$4,427	3,228 SF	9,230 lbs

List price includes: Powder Coated Frame with Open Gables
Call Factory for Gable and Eave Ornamentation

Prices based on 100 MPH wind speed, higher velocities will be quoted based on enginneering requirements.
Signed Sealed Drawings and Calculation Books are priced by project. Shipping and handling by quote.

poligon® *HEXAGON SHELTERS*

RFP NO.08/09-3 Clay County, FL
Various Equipment & Amenities for Parks & Playgrounds
Rep Services, Inc.
902 Waterway Place
Longwood, FL 32750
407-831-9658
www.repservices.com

FOR USE ON SP OR TG ROOF DECK

MODEL NO.	LIST PRICE	ANCHOR BOLTS	DEDUCT FOR PRIME PAINT	ADD TO ECOAT/ POWDERCOAT FRAME	ADD TO HOT DIP GALVANIZE FRAME	ADD FOR SHINGLE PKG.	ADD FOR MULTI-RIB METAL ROOFING	ADD FOR STANDING SEAM METAL ROOFING	CUPOLAS AVAILABLE (see pricing below)	AREA UNDER ROOF	APPROX WEIGHT
HXE-16SP	$6,435	$292	-$420	$512	$917	$440	$1,768	$2,048	H3119M19 or H3119M6	167 SF	2,075 lbs
HXE-16MR	$6,565	$292	-$449	$548	$982	N/A	N/A	N/A	H3119M19 or H3119M6	167 SF	1,575 lbs
HXE-16TG	$6,327	$292	-$449	$548	$982	$440	$1,768	$2,048	H3119M19 or H3119M6	167 SF	2,385 lbs
HXE-20SP	$7,982	$292	-$539	$655	$1,179	$589	$2,619	$2,780	H3119M19 or H3119M6	260 SF	2,755 lbs
HXE-20MR	$7,935	$292	-$568	$696	$1,250	N/A	N/A	N/A	H3119M19 or H3119M6	260 SF	2,050 lbs
HXE-20TG	$7,649	$292	-$568	$696	$1,250	$589	$2,619	$2,780	H3119M19 or H3119M6	260 SF	3,285 lbs
HXE-24SP	$9,810	$292	-$708	$863	$1,548	$738	$3,107	$3,565	H3119M19 or H3119M6	375 SF	3,645 lbs
HXE-24MR	$10,452	$292	-$839	$1,024	$1,833	N/A	N/A	N/A	H3119M19 or H3119M6	375 SF	2,950 lbs
HXE-24TG	$10,369	$292	-$839	$1,024	$1,833	$738	$3,107	$3,565	H3119M19 or H3119M6	375 SF	4,780 lbs
HXE-28SP	$12,071	$292	-$839	$1,018	$1,833	$1,012	$3,827	$4,494	H3119M19 or H3119M6	510 SF	4,560 lbs
HXE-28MR	$12,399	$292	-$967	$1,185	$2,119	N/A	N/A	N/A	H3119M19 or H3119M6	510 SF	3,520 lbs
HXE-28TG	$12,351	$292	-$967	$1,185	$2,119	$1,012	$3,827	$4,494	H3119M19 or H3119M6	510 SF	6,085 lbs
HXE-32SP	$14,369	$292	-$887	$1,083	$1,940	$1,435	$4,577	$5,899	any	666 SF	5,560 lbs
HXE-32MR	$14,018	$292	-$1,045	$1,274	$2,280	N/A	N/A	N/A	any except H5424W7	666 SF	3,915 lbs
HXE-32TG	$14,030	$292	-$1,045	$1,274	$2,280	$1,435	$4,577	$5,899	any	666 SF	7,235 lbs
HXE-40SP	$22,667	$292	-$1,655	$2,018	$3,107	$2,143	$6,565	$8,321	any	1040 SF	9,280 lbs
HXE-40MR	$22,577	$292	-$1,961	$2,399	$3,690	N/A	N/A	N/A	any except H5424W7	1040 SF	6,950 lbs
HXE-40TG	$22,958	$292	-$1,961	$2,399	$3,690	$2,143	$6,565	$8,321	any	1040 SF	12,210 lbs
HXE-48SP	$31,542	$292	-$2,551	$3,119	$4,804	$3,060	$8,845	$11,185	any	1497 SF	13,655 lbs
HXE-48MR	$30,804	$292	-$2,991	$3,655	$5,631	N/A	N/A	N/A	any except H5424W7	1497 SF	10,370 lbs
HXE-48TG	$31,577	$292	-$2,991	$3,655	$5,631	$3,060	$8,845	$11,185	any	1497 SF	17,865 lbs
HXE-58SP	$50,601	$292	-$4,318	$5,274	$7,292	$4,506	$12,042	$15,220	any	2185 SF	21,165 lbs
HXE-58MR	$43,690	$292	-$4,345	$5,310	$7,333	N/A	N/A	N/A	any except H5424W7	2185 SF	15,000 lbs
HXE-58TG	$44,821	$292	-$4,345	$5,310	$7,333	$4,506	$12,042	$15,220	any	2185 SF	25,910 lbs
HXE-64SP	$65,905	$292	-$6,137	$7,500	$10,363	$5,530	$14,125	$17,976	any	2661 SF	28,015 lbs
HXE-64MR	$57,851	$292	-$6,164	$7,536	$10,411	N/A	N/A	N/A	any except H5424W7	2661 SF	20,585 lbs
HXE-64TG	$58,982	$292	-$6,164	$7,536	$10,411	$5,530	$14,125	$17,976	any	2661 SF	33,860 lbs

List price includes: Powder Coated frame

OPTIONAL CUPOLAS (see above)

H5424W7	$1,393	WOOD LOUVERED (ornamental only: attaches to wood roof deck)
H4822V6	$1,393	LARGE STEEL FRAME WITH LOUVERS (functional: attached to compression ring, to install roof panels must be cut back on site)
H3119M6	$1,036	SMALL SHEET METAL LOUVERED LOW PITCH (ornamental only: attaches to any roof deck)
H3119M19	$1,036	SMALL SHEET METAL LOUVERED HIGH PITCH (ornamental only: attaches to any roof deck)
H4818F12	$1,107	LARGE STEEL FRAME OPEN (functional: attached to compression ring, to install roof panels must be cut back on site)

Prices based on 100 MPH wind speed, higher velocities will be quoted based on enginneering requirements.
Signed Sealed Drawings and Calculation Books are priced by project. Shipping and handling by quote.

poligon® *CLERESTORY SHELTERS MARQUEE*

RFP NO.08/09-3 Clay County, FL
Various Equipment & Amenities for Parks & Playgrounds
Rep Services, Inc.
902 Waterway Place
Longwood, FL 32750
407-831-9658
www.repservices.com

						FOR USE ON SP OR TG ROOF DECK				
MODEL NO.	LIST PRICE	ANCHOR BOLTS	DEDUCT FOR PRIME PAINT	ADD TO ECOAT/ POWDERCOAT FRAME	ADD TO HOT DIP GALVANIZE FRAME	ADD FOR SHINGLE PKG.	ADD FOR MULTI-RIB METAL ROOFING	ADD FOR STANDING SEAM METAL ROOFING	AREA UNDER ROOF	APPROX WEIGHT
MAR-14x24SP	$16,409	$208	-$1,277	$1,560	$2,405	$946	$3,565	$4,012	336 SF	5,160 lbs
MAR-14x24MR	$15,921	$208	-$1,321	$1,613	$2,482	N/A	N/A	N/A	336 SF	4,095 lbs
MAR-14x24TG	$17,261	$208	-$1,321	$1,613	$2,482	$946	$3,565	$4,012	336 SF	8,865 lbs
MAR-20x24SP	$21,370	$208	-$1,914	$2,333	$3,595	$1,274	$4,667	$5,185	480 SF	7,650 lbs
MAR-20x24MR	$20,111	$208	-$1,958	$2,387	$3,679	N/A	N/A	N/A	480 SF	6,000 lbs
MAR-20x24TG	$22,243	$208	-$1,958	$2,387	$3,679	$1,274	$4,667	$5,185	480 SF	12,765 lbs
MAR-20x34SP	$23,871	$208	-$2,220	$2,714	$4,179	$1,577	$5,375	$6,083	680 SF	8,920 lbs
MAR-20x34MR	$22,345	$208	-$2,265	$2,768	$4,262	N/A	N/A	N/A	680 SF	6,990 lbs
MAR-20x34TG	$24,348	$208	-$2,265	$2,768	$4,262	$1,577	$5,375	$6,083	680 SF	14,175 lbs
MAR-24x34SP	$27,263	$208	-$2,592	$3,173	$4,881	$1,875	$6,190	$7,018	816 SF	10,630 lbs
MAR-24x34MR	$25,071	$208	-$2,637	$3,226	$4,964	N/A	N/A	N/A	816 SF	8,180 lbs
MAR-24x34TG	$27,632	$208	-$2,637	$3,226	$4,964	$1,875	$6,190	$7,018	816 SF	16,835 lbs
MAR-24x44SP	$35,566	$292	-$3,259	$3,976	$6,125	$2,196	$6,970	$8,113	1056 SF	12,925 lbs
MAR-24x44MR	$32,711	$292	-$3,280	$4,012	$6,173	N/A	N/A	N/A	1056 SF	10,090 lbs
MAR-24x44TG	$35,271	$292	-$3,280	$4,012	$6,173	$2,196	$6,970	$8,113	1056 SF	19,315 lbs
MAR-30x44SP	$37,007	$292	-$2,952	$3,601	$5,548	$2,839	$8,631	$10,071	1320 SF	13,620 lbs
MAR-30x44MR	$32,995	$292	-$2,973	$3,631	$5,595	N/A	N/A	N/A	1320 SF	9,805 lbs
MAR-30x44TG	$36,413	$292	-$2,973	$3,631	$5,595	$2,839	$8,631	$10,071	1320 SF	21,465 lbs
MAR-30x64SP	$48,086	$375	-$4,351	$5,315	$7,345	$3,565	$10,375	$12,435	1920 SF	18,480 lbs
MAR-30x64MR	$43,666	$375	-$4,396	$5,369	$7,423	N/A	N/A	N/A	1920 SF	13,915 lbs
MAR-30x64TG	$47,073	$375	-$4,396	$5,369	$7,423	$3,565	$10,375	$12,435	1920 SF	27,205 lbs

LIST PRICE INCLUDES:
POWDER COATED FRAME
NO HANDRAILS OR ORNAMENTATION. IF ACCESSORIES ARE DESIRED, CONTACT FACTORY FOR QUOTE.

Prices based on 100 MPH wind speed, higher velocities will be quoted based on enginneering requirements.
Signed Sealed Drawings and Calculation Books are priced by project. Shipping and handling by quote.

poligon® *OCTAGONS*

RFP NO.08/09-3 Clay County, FL
Various Equipment & Amenities for Parks & Playgrounds
Rep Services, Inc.
902 Waterway Place
Longwood, FL 32750
407-831-9658
www.repservices.com

						FOR USE ON SP OR TG ROOF DECK					
MODEL NO.	LIST PRICE	ANCHOR BOLTS	DEDUCT FOR PRIME PAINT	ADD TO ECOAT/ POWDERCOAT FRAME	ADD TO HOT DIP GALVANIZE FRAME	ADD FOR SHINGLE PKG.	ADD FOR MULTI-RIB METAL ROOFING	ADD FOR STANDING SEAM METAL ROOFING	CUPOLAS AVAILABLE (see pricing below)	AREA UNDER ROOF	APPROX WEIGHT
OTC-16SP	$8,119	$375	-$542	$667	$1,190	$440	$2,208	$2,423	O3324M18	182 SF	2,435 lbs
OTC-16MR	$8,339	$375	-$568	$696	$1,250	N/A	N/A	N/A	O3324M18	182 SF	1,890 lbs
OTC-16TG	$7,827	$375	-$568	$696	$1,250	$440	$2,208	$2,423	O3324M18	182 SF	2,900 lbs
OTC-20SP	$12,250	$375	-$887	$1,083	$1,940	$679	$2,679	$3,155	O3324M18	283 SF	3,835 lbs
OTC-20MR	$12,012	$375	-$911	$1,113	$2,000	N/A	N/A	N/A	O3324M18	283 SF	3,005 lbs
OTC-20TG	$11,631	$375	-$911	$1,113	$2,000	$679	$2,679	$3,155	O3324M18	283 SF	4,615 lbs
OTC-24SP	$16,280	$375	-$1,176	$1,435	$2,214	$851	$3,583	$4,226	O3324M18	408 SF	5,155 lbs
OTC-24MR	$15,935	$375	-$1,211	$1,476	$2,274	N/A	N/A	N/A	O3324M18	408 SF	3,990 lbs
OTC-24TG	$15,458	$375	-$1,211	$1,476	$2,274	$851	$3,583	$4,226	O3324M18	408 SF	6,360 lbs
OTC-28SP	$19,363	$375	-$1,366	$1,667	$2,565	$1,125	$4,369	$5,185	any	555 SF	6,325 lbs
OTC-28MR	$18,369	$375	-$1,399	$1,708	$2,631	N/A	N/A	N/A	any except O4820W7	555 SF	4,720 lbs
OTC-28TG	$18,012	$375	-$1,399	$1,708	$2,631	$1,125	$4,369	$5,185	any	555 SF	7,810 lbs
OTC-32SP	$21,732	$375	-$1,527	$1,869	$2,875	$1,548	$5,482	$6,280	any	725 SF	7,535 lbs
OTC-32MR	$20,375	$375	-$1,563	$1,905	$2,935	N/A	N/A	N/A	any except O4820W7	725 SF	5,425 lbs
OTC-32TG	$19,887	$375	-$1,563	$1,905	$2,935	$1,548	$5,482	$6,280	any	725 SF	9,400 lbs
OTC-40SP	$28,256	$375	-$1,991	$2,429	$3,744	$2,310	$7,762	$8,893	any	1132 SF	10,635 lbs
OTC-40MR	$25,619	$375	-$2,024	$2,470	$3,804	N/A	N/A	N/A	any except O4820W7	1132 SF	7,290 lbs
OTC-40TG	$25,095	$375	-$2,024	$2,470	$3,804	$2,310	$7,762	$8,893	any	1132 SF	13,310 lbs
OTC-48SP	$35,482	$375	-$2,426	$2,958	$4,554	$3,357	$10,411	$11,667	any	1630 SF	14,075 lbs
OTC-48MR	$31,333	$375	-$2,458	$3,000	$4,619	N/A	N/A	N/A	any except O4820W7	1630 SF	9,200 lbs
OTC-48TG	$30,869	$375	-$2,458	$3,000	$4,619	$3,357	$10,411	$11,667	any	1630 SF	17,710 lbs
OTC-58SP	$58,351	$375	-$5,003	$6,113	$8,446	$5,155	$14,756	$16,137	any	2379 SF	24,315 lbs
OTC-58MR	$52,595	$375	-$5,036	$6,155	$8,506	N/A	N/A	N/A	any except O4820W7	2379 SF	17,320 lbs
OTC-58TG	$51,786	$375	-$5,036	$6,155	$8,506	$5,155	$14,756	$16,137	any	2379 SF	29,650 lbs
OTC-64SP	$70,101	$375	-$6,027	$7,369	$10,179	$6,405	$17,036	$18,851	any	2897 SF	29,390 lbs
OTC-64MR	$62,411	$375	-$6,063	$7,405	$10,232	N/A	N/A	N/A	any except O4820W7	2897 SF	20,895 lbs
OTC-64TG	$62,196	$375	-$6,063	$7,405	$10,232	$6,405	$17,036	$18,851	any	2897 SF	35,885 lbs

List price includes: Powder Coated frame

FOR OCTAGON		
O4820W7	$2,202	WOOD LOUVERED (ornamental only: attaches to wood roof deck)
O4820V7	$2,202	LARGE STEEL FRAME WITH LOUVERS (functional: attached to compression ring, to install roof panels must be cut back on site)
O3324M18	$1,327	SMALL SHEET METAL LOUVERED HIGH PITCH (ornamental only: attaches to any roof deck)
O4820F7	$1,756	LARGE STEEL FRAME OPEN (functional: attached to compression ring, to install roof panels must be cut back on site)

Prices based on 100 MPH wind speed, higher velocities will be quoted based on enginneering requirements.
Signed Sealed Drawings and Calculation Books are priced by project. Shipping and handling by quote.

poligon® *PAVILIONS*

RFP NO.08/09-3 Clay County, FL
Various Equipment & Amenities for Parks & Playgrounds
Rep Services, Inc.
902 Waterway Place
Longwood, FL 32750
407-831-9658
www.repservices.com

						FOR USE ON SP OR TG ROOF DECK					
MODEL NO.	LIST PRICE	ANCHOR BOLTS	DEDUCT FOR PRIME PAINT	ADD TO ECOAT/ POWDERCOAT FRAME	ADD TO HOT DIP GALVANIZE FRAME	ADD FOR SHINGLE PKG.	ADD FOR MULTI-RIB METAL ROOFING	ADD FOR STANDING SEAM METAL ROOFING	CUPOLA INCLUDED	AREA UNDER ROOF	APPROX WEIGHT
PVA-49SP	$64,768	$542	-$5,021	$6,137	$8,476	$3,690	$11,958	$11,506	D4836V6	1801 SF	21,645 lbs
PVA-49MR	$58,327	$542	-$5,098	$6,226	$8,607	N/A	N/A	N/A	D4836V6	1801 SF	16,560 lbs
PVA-49TG	$58,923	$542	-$5,098	$6,226	$8,607	$3,690	$11,958	$11,506	D4836V6	1801 SF	25,795 lbs
PVA-59SP	$91,988	$542	-$6,935	$8,476	$11,714	$5,518	$16,673	$16,720	D4836V6	2611 SF	30,190 lbs
PVA-59MR	$85,006	$542	-$7,193	$8,792	$12,149	N/A	N/A	N/A	D4836V6	2611 SF	23,400 lbs
PVA-59TG	$85,887	$542	-$7,193	$8,792	$12,149	$5,518	$16,673	$16,720	D4836V6	2611 SF	36,635 lbs
PVA-65SP	$103,643	$542	-$7,869	$9,619	$13,292	$6,792	$18,905	$20,143	D4836V6	3169 SF	34,995 lbs
PVA-65MR	$94,494	$542	-$8,128	$9,935	$13,726	N/A	N/A	N/A	D4836V6	3169 SF	26,715 lbs
PVA-65TG	$96,137	$542	-$8,128	$9,935	$13,726	$6,792	$18,905	$20,143	D4836V6	3169 SF	42,790 lbs
PVA-85SP	$170,143	$542	-$15,399	$18,815	$26,000	$12,899	$30,458	$37,113	D7242V6	5419 SF	64,895 lbs
PVA-85MR	$153,071	$542	-$15,494	$18,935	$26,161	N/A	N/A	N/A	D7242V6	5419 SF	49,860 lbs
PVA-85TG	$155,440	$542	-$15,494	$18,935	$26,161	$12,899	$30,458	$37,113	D7242V6	5419 SF	76,875 lbs
PLC-49SP	$71,159	$542	-$6,021	$7,363	$10,173	$4,315	$13,577	$15,214	D4836V6	1801 SF	24,095 lbs
PLC-49MR	$67,077	$542	-$6,158	$7,524	$10,399	N/A	N/A	N/A	D4836V6	1801 SF	18,865 lbs
PLC-49TG	$67,527	$542	-$6,158	$7,524	$10,399	$4,315	$13,577	$15,214	D4836V6	1801 SF	28,870 lbs
PLC-59SP	$93,129	$542	-$7,923	$9,679	$13,375	$6,292	$17,810	$21,357	D4836V6	2611 SF	32,550 lbs
PLC-59MR	$86,089	$542	-$8,060	$9,845	$13,607	N/A	N/A	N/A	D4836V6	2611 SF	24,950 lbs
PLC-59TG	$87,321	$542	-$8,060	$9,845	$13,607	$6,292	$17,810	$21,357	D4836V6	2611 SF	39,070 lbs
PLC-65SP	$101,014	$542	-$9,012	$11,018	$15,220	$7,821	$20,643	$26,542	D4836V6	3169 SF	37,740 lbs
PLC-65MR	$92,068	$542	-$9,149	$11,185	$15,452	N/A	N/A	N/A	D4836V6	3169 SF	28,590 lbs
PLC-65TG	$93,814	$542	-$9,149	$11,185	$15,452	$7,821	$20,643	$26,542	D4836V6	3169 SF	45,495 lbs
PLC-85SP	$152,796	$542	-$14,560	$17,792	$24,583	$14,690	$32,089	$47,798	D7242V6	5419 SF	61,670 lbs
PLC-85MR	$136,516	$542	-$14,693	$17,958	$24,815	N/A	N/A	N/A	D7242V6	5419 SF	46,105 lbs
PLC-85TG	$140,277	$542	-$14,693	$17,958	$24,815	$14,690	$32,089	$47,798	D7242V6	5419 SF	74,185 lbs

List price includes: Powder Coated frame, cupola as listed
NO HANDRAILS OR ORNAMENTATION. IF ACCESSORIES ARE DESIRED, CONTACT FACTORY FOR QUOTE.
"CL" in model number means the shelter has a "clerestory" or elevated center section

Prices based on 100 MPH wind speed, higher velocities will be quoted based on enginneering requirements.
Signed Sealed Drawings and Calculation Books are priced by project. Shipping and handling by quote.

poligon® *PERGOLA & TRELLIS*

RFP NO.08/09-3 Clay County, FL
Various Equipment & Amenities for Parks & Playgrounds
Rep Services, Inc.
902 Waterway Place
Longwood, FL 32750
407-831-9658
www.repservices.com

PERGOLAS

MODEL NO.	LIST PRICE	ANCHOR BOLTS	AREA UNDER TOP	APPROX WEIGHT
PER-13	$13,815	$375	120 SF	5,055 lbs
PER-20	$21,719	$375	283 SF	7,765 lbs

ECOAT/POWDER COATING INCLUDED IN PERGOLA PRICING

TRELLIS COMPONENTS:

IMPORTANT: FIRST CHOOSE TYPE AND NUMBER OF TRELLIS STYLE TOPS, THEN ADD REQUIRED NUMBER OF DESIRED COLUMNS. (EX. A SINGLE TRELLIS TOP WILL REQUIRE 4 COLUMNS, TWO CONNECTED TRELLIS COMPONENTS WILL REQUIRE 6 COLUMNS.)

COLUMNS ARE NOT INCLUDED IN THE COMPONENT "A" PRICES. AFTER TRELLIS COMPONENT "A" CONFIGURATION IS DETERMINED, QUANTITIES OF COLUMNS MUST BE ADDED TO BE INCLUDED IN PRICING.

ANCHOR BOLT PRICING IS BASED ON EACH COLUMN. ANCHOR BOLT QUANTITIES MUST EQUAL COLUMN QUANTITIES.

COMPONENT A	**POWDERCOATED TRELLIS**	LIST PRICE	AREA UNDER TOP	APPROX WEIGHT
TRE-8A (Arch)	8x8	$2,804	62 SF	575 lbs
TRE-10A (Arch)	8x10	$3,286	77 SF	735 lbs
TRE-12A (Arch)	8x12	$3,786	92 SF	890 lbs
TRE-8F (Flat)	8x8	$1,881	62 SF	500 lbs
TRE-10F (Flat)	8x10	$2,327	77 SF	635 lbs
TRE-12F (Flat)	8x12	$2,774	92 SF	775 lbs
TRE-8G (Gable)	8x8	$2,756	62 SF	650 lbs
TRE-10G (Gable)	8x10	$3,405	77 SF	845 lbs
TRE-12G (Gable)	8x12	$4,048	92 SF	1,035 lbs

COMPONENT B	**POWDERCOATED COLUMN**	LIST PRICE	ANCHOR BOLTS	
COL-S	6" Square	$476	$83	130 lbs
COL-R8	8" Round	$1,179	$83	355 lbs
COL-R8O	8" Round With Bands	$1,536	$83	375 lbs
COL-R12	12" Round	$1,720	$83	535 lbs
COL-R12O	12" Round With Bands	$2,429	$83	565 lbs

POWDER COATING IS INCLUDED IN TRELLIS COMPONENT PRICING

Prices based on 100 MPH wind speed, higher velocities will be quoted based on enginneering requirements.
Signed Sealed Drawings and Calculation Books are priced by project. Shipping and handling by quote.

poligon® *PORTAL*

RFP NO.08/09-3 Clay County, FL
Various Equipment & Amenities for Parks & Playgrounds
Rep Services, Inc.
902 Waterway Place
Longwood, FL 32750
407-831-9658
www.repservices.com

	BASIC PORTAL						ADD FOR MEDALLION AND ARCH ORNAMENTATION			
MODEL NO.	LIST PRICE	ANCHOR BOLTS	DEDUCT FOR PRIME PAINT	ADD TO ECOAT/ POWDERCOAT FRAME	ADD TO HOT DIP GALVANIZE FRAME	APPROX SHIPPING WEIGHT	MEDALLION AND ARCH ORNAMENTATION	ADD TO ECOAT POWDERCOAT ORNAMENTATION	ADD TO GALVANIZE ORNAMENTATION	ARCH ORNAMENTATION WEIGHT
PRT-7	$3,065	$131	-$211	$256	$506	510 lbs	$1,702	$244	$339	185 lbs
PRT-11	$3,190	$131	-$226	$274	$548	545 lbs	$1,768	$298	$411	225 lbs
PRT-15	$3,399	$131	-$253	$310	$613	610 lbs	$2,083	$351	$482	265 lbs
PRT-19	$5,220	$131	-$438	$536	$958	1,055 lbs	$2,220	$405	$530	305 lbs
PRT-23	$5,756	$131	-$497	$607	$1,089	1,205 lbs	$2,863	$458	$595	345 lbs

List price includes: Powder Coated frame

Prices based on 100 MPH wind speed, higher velocities will be quoted based on enginneering requirements.
Signed Sealed Drawings and Calculation Books are priced by project. Shipping and handling by quote.

poligon® *RECTANGULAR HIP SHELTERS*

RFP NO.08/09-3 Clay County, FL
Various Equipment & Amenities for Parks & Playgrounds
Rep Services, Inc.
902 Waterway Place
Longwood, FL 32750
407-831-9658
www.repservices.com

						ON SANDWICH PANEL OR T&G ROOF				
MODEL NO.	LIST PRICE	ANCHOR BOLTS	DEDUCT FOR PRIME PAINT	ADD TO ECOAT/ POWDERCOAT FRAME	ADD TO HOT DIP GALVANIZE FRAME	ADD FOR SHINGLE PKG.	ADD FOR MULTI-RIB METAL ROOFING	ADD FOR STANDING SEAM METAL ROOFING	AREA UNDER ROOF	APPROX WEIGHT
RAM-16x24SP	$12,065	$208	-$938	$1,149	$2,054	$792	$2,643	$3,798	384 SF	4,130 lbs
RAM-16x24MR	$11,292	$208	-$967	$1,179	$2,119	N/A	N/A	N/A	384 SF	3,075 lbs
RAM-16x24TG	$11,292	$208	-$967	$1,179	$2,119	$792	$2,643	$3,798	384 SF	5,240 lbs
RAM-16x34SP	$14,637	$208	-$1,193	$1,452	$2,238	$1,077	$3,571	$5,048	544 SF	5,450 lbs
RAM-16x34MR	$13,214	$208	-$1,220	$1,494	$2,298	N/A	N/A	N/A	544 SF	3,945 lbs
RAM-16x34TG	$13,357	$208	-$1,220	$1,494	$2,298	$1,077	$3,571	$5,048	544 SF	6,865 lbs
RAM-16x44SP	$19,607	$292	-$1,554	$1,899	$2,923	$1,381	$4,333	$6,244	704 SF	7,070 lbs
RAM-16x44MR	$17,536	$292	-$1,583	$1,929	$2,970	N/A	N/A	N/A	704 SF	5,115 lbs
RAM-16x44TG	$17,810	$292	-$1,583	$1,929	$2,970	$1,381	$4,333	$6,244	704 SF	8,770 lbs
RAM-16x64SP	$27,649	$375	-$2,217	$2,702	$4,167	$2,024	$5,929	$8,506	1024 SF	10,110 lbs
RAM-16x64MR	$24,274	$375	-$2,244	$2,738	$4,220	N/A	N/A	N/A	1024 SF	7,265 lbs
RAM-16x64TG	$25,024	$375	-$2,244	$2,738	$4,220	$2,024	$5,929	$8,506	1024 SF	12,600 lbs
ADD PER BAY 16SP	$8,042	$83	-$664	$810	$1,244	$643	$1,601	$2,262	320 SF	3,040 lbs
ADD PER BAY 16MR	$6,744	$83	-$664	$810	$1,244	N/A	N/A	N/A	320 SF	2,155 lbs
ADD PER BAY 16TG	$7,220	$83	-$664	$810	$1,244	$643	$1,601	$2,262	320 SF	3,835 lbs
RAM-20x24SP	$14,935	$208	-$1,193	$1,452	$2,238	$1,071	$3,417	$4,589	480 SF	5,230 lbs
RAM-20x24MR	$13,833	$208	-$1,220	$1,494	$2,298	N/A	N/A	N/A	480 SF	3,865 lbs
RAM-20x24TG	$13,905	$208	-$1,220	$1,494	$2,298	$1,071	$3,417	$4,589	480 SF	6,665 lbs
RAM-20x34SP	$18,685	$208	-$1,592	$1,946	$2,994	$1,357	$4,304	$5,935	680 SF	7,010 lbs
RAM-20x34MR	$17,006	$208	-$1,622	$1,976	$3,048	N/A	N/A	N/A	680 SF	5,155 lbs
RAM-20x34TG	$17,185	$208	-$1,622	$1,976	$3,048	$1,357	$4,304	$5,935	680 SF	8,845 lbs
RAM-20x44SP	$24,839	$292	-$2,128	$2,595	$4,000	$1,827	$5,155	$7,405	880 SF	9,180 lbs
RAM-20x44MR	$22,405	$292	-$2,155	$2,631	$4,054	N/A	N/A	N/A	880 SF	6,825 lbs
RAM-20x44TG	$22,774	$292	-$2,155	$2,631	$4,054	$1,827	$5,155	$7,405	880 SF	11,390 lbs
RAM-20x64SP	$34,571	$375	-$2,964	$3,619	$5,571	$2,607	$7,137	$10,143	1280 SF	12,995 lbs
RAM-20x64MR	$30,601	$375	-$2,991	$3,655	$5,625	N/A	N/A	N/A	1280 SF	9,525 lbs
RAM-20x64TG	$31,387	$375	-$2,991	$3,655	$5,625	$2,607	$7,137	$10,143	1280 SF	16,045 lbs
ADD PER BAY 20SP	$9,732	$83	-$836	$1,024	$1,577	$786	$1,982	$2,744	400 SF	3,815 lbs
ADD PER BAY 20MR	$8,196	$83	-$836	$1,024	$1,577	N/A	N/A	N/A	400 SF	2,705 lbs
ADD PER BAY 20TG	$8,613	$83	-$836	$1,024	$1,577	$786	$1,982	$2,744	400 SF	4,660 lbs
RAM-24x34SP	$20,054	$208	-$1,628	$1,988	$3,060	$1,649	$5,018	$6,911	816 SF	7,650 lbs
RAM-24x34MR	$18,030	$208	-$1,658	$2,024	$3,113	N/A	N/A	N/A	816 SF	5,435 lbs
RAM-24x34TG	$18,137	$208	-$1,658	$2,024	$3,113	$1,649	$5,018	$6,911	816 SF	9,705 lbs
RAM-24x44SP	$26,530	$292	-$2,176	$2,661	$4,095	$2,113	$6,000	$8,470	1056 SF	10,065 lbs
RAM-24x44MR	$23,542	$292	-$2,205	$2,690	$4,143	N/A	N/A	N/A	1056 SF	7,180 lbs
RAM-24x44TG	$23,982	$292	-$2,205	$2,690	$4,143	$2,113	$6,000	$8,470	1056 SF	12,660 lbs
RAM-24x64SP	$36,792	$375	-$3,039	$3,714	$5,714	$3,095	$8,232	$11,702	1536 SF	14,255 lbs
RAM-24x64MR	$32,143	$375	-$3,065	$3,750	$5,774	N/A	N/A	N/A	1536 SF	10,055 lbs
RAM-24x64TG	$33,048	$375	-$3,065	$3,750	$5,774	$3,095	$8,232	$11,702	1536 SF	17,765 lbs
ADD PER BAY 24SP	$10,262	$83	-$863	$1,054	$1,625	$982	$2,232	$3,238	480 SF	4,190 lbs
ADD PER BAY 24MR	$8,607	$83	-$863	$1,054	$1,625	N/A	N/A	N/A	480 SF	2,880 lbs
ADD PER BAY 24TG	$9,071	$83	-$863	$1,054	$1,625	$982	$2,232	$3,238	480 SF	5,105 lbs

List price includes: Powder Coated frame

Prices based on 100 MPH wind speed, higher velocities will be quoted based on enginneering requirements.
Signed Sealed Drawings and Calculation Books are priced by project. Shipping and handling by quote.

poligon® *RECTANGULAR HIP SHELTERS*

RFP NO.08/09-3 Clay County, FL
Various Equipment & Amenities for Parks & Playgrounds
Rep Services, Inc.
902 Waterway Place
Longwood, FL 32750
407-831-9658
www.repservices.com

						ON SANDWICH PANEL OR T&G ROOF				
MODEL NO.	LIST PRICE	ANCHOR BOLTS	DEDUCT FOR PRIME PAINT	ADD TO ECOAT/ POWDERCOAT FRAME	ADD TO HOT DIP GALVANIZE FRAME	SHINGLE PKG.	STD MULTI-RIB METAL ROOFING	STANDING SEAM METAL ROOFING	AREA UNDER ROOF	APPROX WEIGHT
RAM-30x44SP	$33,958	$292	-$2,985	$3,643	$5,607	$2,637	$7,583	$10,536	1320 SF	13,110 lbs
RAM-30x44MR	$30,560	$292	-$3,012	$3,679	$5,667	N/A	N/A	N/A	1320 SF	9,620 lbs
RAM-30x44TG	$30,821	$292	-$3,012	$3,679	$5,667	$2,637	$7,583	$10,536	1320 SF	16,275 lbs
RAM-30x64SP	$45,923	$375	-$3,955	$4,839	$6,685	$3,946	$10,030	$14,381	1920 SF	18,125 lbs
RAM-30x64MR	$40,256	$375	-$3,985	$4,869	$6,726	N/A	N/A	N/A	1920 SF	12,925 lbs
RAM-30x64TG	$41,220	$375	-$3,985	$4,869	$6,726	$3,946	$10,030	$14,381	1920 SF	22,420 lbs
RAM-30x84SP	$57,869	$458	-$4,929	$6,024	$8,327	$5,214	$12,607	$18,202	2520 SF	23,040 lbs
RAM-30x84MR	$49,893	$458	-$4,958	$6,060	$8,369	N/A	N/A	N/A	2520 SF	16,235 lbs
RAM-30x84TG	$51,631	$458	-$4,958	$6,060	$8,369	$5,214	$12,607	$18,202	2520 SF	28,565 lbs
ADD PER BAY 30SP	$11,946	$83	-$973	$1,190	$1,643	$1,274	$2,577	$3,821	600 SF	4,915 lbs
ADD PER BAY 30MR	$9,637	$83	-$973	$1,190	$1,643	N/A	N/A	N/A	600 SF	3,315 lbs
ADD PER BAY 30TG	$10,411	$83	-$973	$1,190	$1,643	$1,274	$2,577	$3,821	600 SF	6,150 lbs
RAM-40x44SP	$45,583	$458	-$3,935	$4,804	$6,637	$3,565	$9,988	$12,964	1760 SF	17,385 lbs
RAM-40x44MR	$41,292	$458	-$3,961	$4,839	$6,690	N/A	N/A	N/A	1760 SF	12,655 lbs
RAM-40x44TG	$41,530	$458	-$3,961	$4,839	$6,690	$3,565	$9,988	$12,964	1760 SF	21,585 lbs
RAM-40x64SP	$75,738	$458	-$7,095	$8,667	$11,976	$5,327	$13,339	$18,643	2560 SF	28,680 lbs
RAM-40x64MR	$68,637	$458	-$7,122	$8,702	$12,030	N/A	N/A	N/A	2560 SF	21,855 lbs
RAM-40x64TG	$69,696	$458	-$7,122	$8,702	$12,030	$5,327	$13,339	$18,643	2560 SF	34,505 lbs
RAM-40x84SP	$95,917	$542	-$9,000	$10,994	$15,190	$7,238	$16,571	$23,661	3360 SF	36,725 lbs
RAM-40x84MR	$85,982	$542	-$9,027	$11,036	$15,244	N/A	N/A	N/A	3360 SF	27,820 lbs
RAM-40x84TG	$87,780	$542	-$9,027	$11,036	$15,244	$7,238	$16,571	$23,661	3360 SF	43,995 lbs
ADD PER BAY 40SP	$20,179	$0	-$1,905	$2,333	$3,220	$1,917	$3,232	$5,024	800 SF	8,050 lbs
ADD PER BAY 40MR	$17,345	$0	-$1,905	$2,333	$3,220	N/A	N/A	N/A	800 SF	5,970 lbs
ADD PER BAY 40TG	$18,083	$0	-$1,905	$2,333	$3,220	$1,917	$3,232	$5,024	800 SF	9,490 lbs
RAM-50x74SP	$95,470	$458	-$9,104	$11,125	$15,375	$8,042	$18,988	$26,315	3700 SF	38,375 lbs
RAM-50x74MR	$85,256	$458	-$9,134	$11,161	$15,423	N/A	N/A	N/A	3700 SF	28,535 lbs
RAM-50x74TG	$86,315	$458	-$9,134	$11,161	$15,423	$8,042	$18,988	$26,315	3700 SF	46,350 lbs
RAM-50x94SP	$120,417	$542	-$11,512	$14,071	$19,446	$10,726	$23,042	$32,333	4700 SF	48,565 lbs
RAM-50x94MR	$106,857	$542	-$11,542	$14,101	$19,488	N/A	N/A	N/A	4700 SF	36,050 lbs
RAM-50x94TG	$108,833	$542	-$11,542	$14,101	$19,488	$10,726	$23,042	$32,333	4700 SF	58,465 lbs
RAM-50x114SP	$145,369	$708	-$13,923	$17,012	$23,506	$13,726	$27,101	$38,607	5700 SF	58,660 lbs
RAM-50x114MR	$128,196	$708	-$13,949	$17,048	$23,560	N/A	N/A	N/A	5700 SF	43,570 lbs
RAM-50x114TG	$131,363	$708	-$13,949	$17,048	$23,560	$13,726	$27,101	$38,607	5700 SF	70,580 lbs
ADD PER BAY 50SP	$24,952	$89	-$2,411	$2,940	$4,065	$3,006	$4,060	$6,274	1000 SF	10,095 lbs
ADD PER BAY 50MR	$21,345	$89	-$2,411	$2,940	$4,065	N/A	N/A	N/A	1000 SF	7,520 lbs
ADD PER BAY 50TG	$22,536	$89	-$2,411	$2,940	$4,065	$3,006	$4,060	$6,274	1000 SF	12,115 lbs

List price includes: Powder Coated frame

Prices based on 100 MPH wind speed, higher velocities will be quoted based on enginneering requirements.
Signed Sealed Drawings and Calculation Books are priced by project. Shipping and handling by quote.

poligon® *RECTANGULAR GABLE SHELTERS*

RFP NO.08/09-3 Clay County, FL
Various Equipment & Amenities for Parks & Playgrounds
Rep Services, Inc.
902 Waterway Place
Longwood, FL 32750
407-831-9658
www.repservices.com

						FOR USE ON SP OR TG ROOF DECK				
MODEL NO.	LIST PRICE	ANCHOR BOLTS	DEDUCT FOR PRIME PAINT	ADD TO ECOAT/ POWDERCOAT FRAME	ADD TO HOT DIP GALVANIZE FRAME	ADD FOR SHINGLE PKG.	ADD FOR MULTI-RIB METAL ROOFING	ADD FOR STANDING SEAM METAL ROOFING	AREA UNDER ROOF	APPROX WEIGHT
REK-16X24SP	$9,667	$208	-$744	$911	$1,631	$685	$2,357	$2,625	384 SF	3,575 lbs
REK-16X24MR	$9,679	$208	-$792	$964	$1,732	N/A	N/A	N/A	384 SF	2,715 lbs
REK-16X24TG	$9,905	$208	-$792	$964	$1,732	$685	$2,357	$2,625	384 SF	4,510 lbs
REK-16X34SP	$13,565	$208	-$1,223	$1,488	$2,298	$952	$3,298	$3,554	544 SF	5,460 lbs
REK-16X34MR	$13,292	$208	-$1,271	$1,554	$2,393	N/A	N/A	N/A	544 SF	4,290 lbs
REK-16X34TG	$13,577	$208	-$1,271	$1,554	$2,393	$952	$3,298	$3,554	544 SF	6,800 lbs
REK-16X44SP	$16,548	$292	-$1,298	$1,589	$2,440	$1,232	$4,036	$4,405	704 SF	6,335 lbs
REK-16X44MR	$15,738	$292	-$1,345	$1,643	$2,530	N/A	N/A	N/A	704 SF	4,695 lbs
REK-16X44TG	$16,238	$292	-$1,345	$1,643	$2,530	$1,232	$4,036	$4,405	704 SF	7,965 lbs
REK-16X64SP	$23,494	$375	-$1,854	$2,262	$3,482	$1,839	$5,667	$6,250	1024 SF	9,105 lbs
REK-16X64MR	$21,810	$375	-$1,899	$2,321	$3,577	N/A	N/A	N/A	1024 SF	6,685 lbs
REK-16X64TG	$22,560	$375	-$1,899	$2,321	$3,577	$1,839	$5,667	$6,250	1024 SF	11,415 lbs
ADD PER BAY 16SP	$6,946	$83	-$557	$679	$1,042	$613	$1,637	$1,851	320 SF	2,770 lbs
ADD PER BAY 16MR	$6,077	$83	-$557	$679	$1,042	N/A	N/A	N/A	320 SF	1,990 lbs
ADD PER BAY 16TG	$6,327	$83	-$557	$679	$1,042	$613	$1,637	$1,851	320 SF	3,450 lbs
REK-20X24SP	$12,542	$208	-$1,063	$1,298	$2,327	$935	$2,720	$3,077	480 SF	4,775 lbs
REK-20X24MR	$12,940	$208	-$1,137	$1,387	$2,137	N/A	N/A	N/A	480 SF	3,780 lbs
REK-20X24TG	$13,238	$208	-$1,137	$1,387	$2,137	$935	$2,720	$3,077	480 SF	6,035 lbs
REK-20X34SP	$17,220	$208	-$1,634	$1,994	$3,071	$1,208	$3,863	$4,190	680 SF	7,130 lbs
REK-20X34MR	$17,131	$208	-$1,708	$2,089	$3,214	N/A	N/A	N/A	680 SF	5,665 lbs
REK-20X34TG	$17,476	$208	-$1,708	$2,089	$3,214	$1,208	$3,863	$4,190	680 SF	8,745 lbs
REK-20X44SP	$21,756	$292	-$1,848	$2,262	$3,476	$1,643	$4,690	$5,161	880 SF	8,505 lbs
REK-20X44MR	$21,006	$292	-$1,926	$2,345	$3,613	N/A	N/A	N/A	880 SF	6,505 lbs
REK-20X44TG	$21,613	$292	-$1,926	$2,345	$3,613	$1,643	$4,690	$5,161	880 SF	10,495 lbs
REK-20X64SP	$30,810	$375	-$2,637	$3,220	$4,952	$2,351	$6,667	$7,369	1280 SF	12,120 lbs
REK-20X64MR	$29,089	$375	-$2,711	$3,310	$5,101	N/A	N/A	N/A	1280 SF	9,235 lbs
REK-20X64TG	$29,970	$375	-$2,711	$3,310	$5,101	$2,351	$6,667	$7,369	1280 SF	14,965 lbs
ADD PER BAY 20SP	$9,054	$83	-$789	$958	$1,482	$708	$1,982	$2,208	400 SF	3,620 lbs
ADD PER BAY 20MR	$8,089	$83	-$789	$958	$1,482	N/A	N/A	N/A	400 SF	2,735 lbs
ADD PER BAY 20TG	$8,363	$83	-$789	$958	$1,482	$708	$1,982	$2,208	400 SF	4,475 lbs
REK-24X24SP	$13,744	$208	-$1,182	$1,440	$2,214	$1,077	$3,089	$3,542	576 SF	5,440 lbs
REK-24X24MR	$13,708	$208	-$1,253	$1,530	$2,357	N/A	N/A	N/A	576 SF	4,220 lbs
REK-24X24TG	$14,089	$208	-$1,253	$1,530	$2,357	$1,077	$3,089	$3,542	576 SF	6,920 lbs
REK-24X34SP	$18,661	$208	-$1,693	$2,065	$3,179	$1,470	$4,405	$4,839	816 SF	7,840 lbs
REK-24X34MR	$17,911	$208	-$1,765	$2,161	$3,321	N/A	N/A	N/A	816 SF	6,000 lbs
REK-24X34TG	$18,351	$208	-$1,765	$2,161	$3,321	$1,470	$4,405	$4,839	816 SF	9,670 lbs
REK-24X44SP	$23,625	$292	-$2,027	$2,476	$3,810	$1,911	$5,375	$5,970	1056 SF	9,640 lbs
REK-24X44MR	$22,155	$292	-$2,101	$2,565	$3,946	N/A	N/A	N/A	1056 SF	7,210 lbs
REK-24X44TG	$23,024	$292	-$2,101	$2,565	$3,946	$1,911	$5,375	$5,970	1056 SF	12,120 lbs
REK-24X64SP	$33,333	$375	-$2,875	$3,506	$5,405	$2,786	$7,643	$8,488	1536 SF	13,740 lbs
REK-24X64MR	$30,643	$375	-$2,946	$3,601	$5,548	N/A	N/A	N/A	1536 SF	10,205 lbs
REK-24X64TG	$31,810	$375	-$2,946	$3,601	$5,548	$2,786	$7,643	$8,488	1536 SF	17,120 lbs

List price includes: Powder Coated frame

Prices based on 100 MPH wind speed, higher velocities will be quoted based on enginneering requirements.
Signed Sealed Drawings and Calculation Books are priced by project. Shipping and handling by quote.

poligon® *RECTANGULAR GABLE SHELTERS*

RFP NO.08/09-3 Clay County, FL
Various Equipment & Amenities for Parks & Playgrounds
Rep Services, Inc.
902 Waterway Place
Longwood, FL 32750
407-831-9658
www.repservices.com

						FOR USE ON SP OR TG ROOF DECK				
MODEL NO.	LIST PRICE	ANCHOR BOLTS	DEDUCT FOR PRIME PAINT	ADD TO ECOAT/ POWDERCOAT FRAME	ADD TO HOT DIP GALVANIZE FRAME	ADD FOR SHINGLE PKG.	ADD FOR MULTI-RIB METAL ROOFING	ADD FOR STANDING SEAM METAL ROOFING	AREA UNDER ROOF	APPROX WEIGHT
ADD PER BAY 24SP	$9,720	$83	-$848	$1,036	$1,595	$881	$2,274	$2,524	480 SF	4,105 lbs
ADD PER BAY 24MR	$8,506	$83	-$848	$1,036	$1,595	N/A	N/A	N/A	480 SF	3,000 lbs
ADD PER BAY 24TG	$8,792	$83	-$848	$1,036	$1,595	$881	$2,274	$2,524	480 SF	5,005 lbs
REK-30X34SP	$23,542	$208	-$2,271	$2,780	$4,274	$1,774	$5,208	$5,750	1020 SF	10,080 lbs
REK-30X34MR	$22,911	$208	-$2,366	$2,887	$4,446	N/A	N/A	N/A	1020 SF	7,910 lbs
REK-30X34TG	$23,423	$208	-$2,366	$2,887	$4,446	$1,774	$5,208	$5,750	1020 SF	12,435 lbs
REK-30X44SP	$29,298	$292	-$2,577	$3,149	$4,845	$2,339	$6,381	$7,113	1320 SF	12,125 lbs
REK-30X44MR	$27,750	$292	-$2,667	$3,262	$5,018	N/A	N/A	N/A	1320 SF	9,100 lbs
REK-30X44TG	$28,774	$292	-$2,667	$3,262	$5,018	$2,339	$6,381	$7,113	1320 SF	15,185 lbs
REK-30X64SP	$41,238	$375	-$3,625	$4,429	$6,821	$3,536	$9,107	$10,137	1920 SF	17,195 lbs
REK-30X64MR	$38,196	$375	-$3,717	$4,536	$6,274	N/A	N/A	N/A	1920 SF	12,805 lbs
REK-30X64TG	$39,637	$375	-$3,717	$4,536	$6,274	$3,536	$9,107	$10,137	1920 SF	21,490 lbs
REK-30X84SP	$53,232	$458	-$4,676	$5,708	$7,887	$4,661	$11,458	$13,065	2520 SF	22,280 lbs
REK-30X84MR	$48,339	$458	-$4,765	$5,821	$8,042	N/A	N/A	N/A	2520 SF	16,395 lbs
REK-30X84TG	$50,494	$458	-$4,765	$5,821	$8,042	$4,661	$11,458	$13,065	2520 SF	27,795 lbs
ADD PER BAY 30SP	$11,946	$83	-$1,051	$1,280	$1,071	$1,131	$2,351	$2,935	600 SF	5,085 lbs
ADD PER BAY 30MR	$10,446	$83	-$1,051	$1,280	$1,768	N/A	N/A	N/A	600 SF	3,590 lbs
ADD PER BAY 30TG	$10,863	$83	-$1,051	$1,280	$1,768	$1,131	$2,351	$2,935	600 SF	6,310 lbs
REK-40X44SP	$40,470	$292	-$3,914	$4,780	$6,607	$3,196	$8,083	$9,137	1760 SF	17,310 lbs
REK-40X44MR	$38,155	$292	-$4,036	$4,935	$6,821	N/A	N/A	N/A	1760 SF	13,410 lbs
REK-40X44TG	$39,429	$292	-$4,036	$4,935	$6,821	$3,196	$8,083	$9,137	1760 SF	21,385 lbs
REK-40X64SP	$57,268	$375	-$5,509	$6,732	$9,304	$4,756	$11,583	$12,994	2560 SF	24,635 lbs
REK-40X64MR	$52,815	$375	-$5,634	$6,881	$9,512	N/A	N/A	N/A	2560 SF	18,875 lbs
REK-40X64TG	$54,661	$375	-$5,634	$6,881	$9,512	$4,756	$11,583	$12,994	2560 SF	30,320 lbs
REK-40X84SP	$74,083	$458	-$7,107	$8,685	$12,000	$6,476	$14,565	$16,750	3360 SF	31,970 lbs
REK-40X84MR	$67,089	$458	-$7,229	$8,839	$12,214	N/A	N/A	N/A	3360 SF	24,185 lbs
REK-40X84TG	$70,030	$458	-$7,229	$8,839	$12,214	$6,476	$14,565	$16,750	3360 SF	39,455 lbs
ADD PER BAY 40SP	$16,815	$83	-$1,598	$1,952	$2,696	$1,720	$2,982	$3,762	800 SF	7,340 lbs
ADD PER BAY 40MR	$14,280	$83	-$1,598	$1,952	$2,696	N/A	N/A	N/A	800 SF	5,310 lbs
ADD PER BAY 40TG	$15,375	$83	-$1,598	$1,952	$2,696	$1,720	$2,982	$3,762	800 SF	9,135 lbs
REK-50X64SP	$83,786	$375	-$8,411	$10,274	$14,202	$6,101	$14,018	$15,810	3200 SF	34,970 lbs
REK-50X64MR	$74,440	$375	-$8,542	$10,435	$14,417	N/A	N/A	N/A	3200 SF	27,685 lbs
REK-50X64TG	$80,643	$375	-$8,542	$10,435	$14,417	$6,101	$14,018	$15,810	3200 SF	42,080 lbs
REK-50X84SP	$107,732	$458	-$10,771	$13,167	$18,196	$8,440	$17,708	$20,423	4200 SF	45,135 lbs
REK-50X84MR	$99,030	$458	-$10,902	$13,327	$18,411	N/A	N/A	N/A	4200 SF	35,320 lbs
REK-50X84TG	$102,601	$458	-$10,902	$13,327	$18,411	$8,440	$17,708	$20,423	4200 SF	54,245 lbs
REK-50X104SP	$131,720	$542	-$13,134	$16,054	$22,179	$10,815	$21,946	$24,994	5200 SF	55,310 lbs
REK-50X104MR	$120,280	$542	-$13,265	$16,208	$22,399	N/A	N/A	N/A	5200 SF	43,145 lbs
REK-50X104TG	$124,565	$542	-$13,265	$16,208	$22,399	$10,815	$21,946	$24,994	5200 SF	66,410 lbs
ADD PER BAY 50SP	$23,988	$89	-$2,363	$2,887	$3,988	$2,375	$4,238	$4,577	1000 SF	10,180 lbs
ADD PER BAY 50MR	$21,250	$89	-$2,363	$2,887	$3,994	N/A	N/A	N/A	1000 SF	7,825 lbs
ADD PER BAY 50TG	$21,964	$89	-$2,363	$2,887	$3,994	$2,375	$4,238	$4,577	1000 SF	12,165 lbs

List price includes: Powder Coated frame

Prices based on 100 MPH wind speed, higher velocities will be quoted based on enginneering requirements.
Signed Sealed Drawings and Calculation Books are priced by project. Shipping and handling by quote.

poligon® SANTA FE TRELLIS

RFP NO.08/09-3 Clay County, FL
Various Equipment & Amenities for Parks & Playgrounds
Rep Services, Inc.
902 Waterway Place
Longwood, FL 32750
407-831-9658
www.repservices.com

				ADD FOR PREMIUM FINISHES							
MODEL NO.	LIST PRICE	ANCHOR BOLTS	Deduct for Prime Paint Only	PoliShield	Ecoat / TGIC	TGIC / Clear Coat	PoliShield / Clear Coat	Ecoat / TGIC / Clear Coat	Galvanizing	AREA UNDER ROOF	APPROX WEIGHT
SFE-10X10	$11,071	$202	-$733	$570	$896	$1,140	$1,711	$2,036	$1,058	100 SF	1,820 lbs
SFE-10X20	$14,024	$202	-$1,005	$782	$1,229	$1,563	$2,345	$2,792	$1,452	200 SF	2,490 lbs
SFE-10X30	$17,000	$202	-$1,280	$995	$1,563	$1,990	$2,985	$3,554	$1,848	300 SF	3,170 lbs
SFE-10X40	$23,690	$280	-$1,757	$1,367	$2,148	$2,732	$4,099	$4,879	$2,537	400 SF	4,350 lbs
SFE-20X20	$21,512	$202	-$1,476	$1,149	$1,805	$2,296	$3,444	$4,100	$2,132	400 SF	3,660 lbs
SFE-20X30	$27,988	$202	$1,961	$1,525	$2,396	$3,050	$4,575	$5,446	$2,832	600 SF	4,855 lbs
SFE-20X40	$38,208	$280	-$2,651	$2,062	$3,239	$4,123	$6,185	$7,362	$3,829	800 SF	6,560 lbs

LIST PRICE INCLUDES:
POWDER COATED (TGIC) FRAME OR Z-PRIMED FRAME. SPECIFY AT ORDER.
NO HANDRAILS OR ORNAMENTATION. IF ACCESSORIES ARE DESIRED, CONTACT FACTORY FOR QUOTE.

NOTE: This pricing is not yet available on the Poligon Pricing Configurator. New and/or updated prices will be forwarded to you when necessary. Please contact Poligon Sales with your questions.

Prices based on 100 MPH wind speed, higher velocities will be quoted based on enginneering requirements.
Signed Sealed Drawings and Calculation Books are priced by project. Shipping and handling by quote.

poligon® *SQUARES*

RFP NO.08/09-3 Clay County, FL
Various Equipment & Amenities for Parks & Playgrounds
Rep Services, Inc.
902 Waterway Place
Longwood, FL 32750
407-831-9658
www.repservices.com

MODEL NO.	LIST PRICE	ANCHOR BOLTS	DEDUCT FOR PRIME PAINT	ADD TO ECOAT/ POWDERCOAT FRAME	ADD TO HOT DIP GALVANIZE FRAME	FOR USE ON SP OR TG ROOF DECK: ADD FOR SHINGLE PKG.	FOR USE ON SP OR TG ROOF DECK: ADD FOR MULTI-RIB METAL ROOFING	FOR USE ON SP OR TG ROOF DECK: ADD FOR STANDING SEAM METAL ROOFING	CUPOLAS AVAILABLE (see pricing below)	AREA UNDER ROOF	APPROX WEIGHT
SQR-12-2GSP	$3,565	N/A	-$211	$256	$506	$304	$1,250	$1,298	N/A	144 SF	1,210 lbs
SQR-12-2GMR	$3,185	N/A	-$211	$256	$506	N/A	N/A	N/A	N/A	144 SF	805 lbs
SQR-12-2GTG	$3,196	N/A	-$211	$256	$506	$304	$1,250	$1,298	N/A	144 SF	1,575 lbs
SQR-12-2HSP	$4,780	N/A	-$265	$321	$637	$387	$1,512	$2,208	S2718M6 or S2718W6	144 SF	1,540 lbs
SQR-12-2HMR	$4,030	N/A	-$265	$321	$637	N/A	N/A	N/A	S2718M6	144 SF	970 lbs
SQR-12-2HTG	$3,958	N/A	-$265	$321	$637	$387	$1,512	$2,208	S2718M6 or S2718W6	144 SF	2,090 lbs
SQR-10-SP	$5,155	$208	-$357	$435	$857	$292	$1,113	$1,411	S2718M6 or S2718W6	100 SF	1,575 lbs
SQR-10-MR	$4,536	$208	-$357	$435	$857	N/A	N/A	N/A	S2718M6	100 SF	1,160 lbs
SQR-10-TG	$4,476	$208	-$357	$435	$857	$292	$1,113	$1,411	S2718M6 or S2718W6	100 SF	1,960 lbs
SQR-12-SP	$5,857	$208	-$393	$482	$863	$387	$1,512	$2,208	S2718M6 or S2718W6	144 SF	1,910 lbs
SQR-12-MR	$5,119	$208	-$393	$482	$863	N/A	N/A	N/A	S2718M6	144 SF	1,335 lbs
SQR-12-TG	$5,048	$208	-$393	$482	$863	$387	$1,512	$2,208	S2718M6 or S2718W6	144 SF	2,460 lbs
SQR-14-SP	$7,006	$208	-$467	$571	$1,024	$446	$1,851	$2,815	S2718M6 or S2718W6	196 SF	2,325 lbs
SQR-14-MR	$6,161	$208	-$467	$571	$1,024	N/A	N/A	N/A	S2718M6	196 SF	1,610 lbs
SQR-14-TG	$5,911	$208	-$467	$571	$1,024	$446	$1,851	$2,815	S2718M6 or S2718W6	196 SF	2,845 lbs
SQR-16SP	$7,744	$208	-$515	$625	$1,125	$595	$2,196	$3,339	S2718M6 or S2718W6	256 SF	2,685 lbs
SQR-16MR	$6,768	$208	-$515	$625	$1,125	N/A	N/A	N/A	S2718M6	256 SF	1,825 lbs
SQR-16TG	$6,613	$208	-$515	$625	$1,125	$595	$2,196	$3,339	S2718M6 or S2718W6	256 SF	3,550 lbs
SQR-20SP	$11,554	$208	-$842	$1,030	$1,845	$857	$3,060	$4,458	S2718M6 or S2718W6	400 SF	4,235 lbs
SQR-20MR	$10,042	$208	-$842	$1,030	$1,845	N/A	N/A	N/A	S2718M6	400 SF	2,925 lbs
SQR-20TG	$9,958	$208	-$842	$1,030	$1,845	$857	$3,060	$4,458	S2718M6 or S2718W6	400 SF	5,400 lbs
SQR-24SP	$14,161	$208	-$1,051	$1,286	$2,304	$1,161	$3,935	$5,804	S2718M6, W6, S3524V6, or F6	576 SF	5,570 lbs
SQR-24MR	$12,030	$208	-$1,051	$1,286	$2,304	N/A	N/A	N/A	S2718M6, S3524V6, or F6	576 SF	3,745 lbs
SQR-24TG	$12,006	$208	-$1,051	$1,286	$2,304	$1,161	$3,935	$5,804	S2718M6, W6, S3524V6, or F6	576 SF	7,115 lbs
SQR-30SP	$22,440	$208	-$1,768	$2,161	$3,327	$1,869	$5,577	$8,387	S2718M6, W6, S3524V6, or F6	900 SF	8,845 lbs
SQR-30MR	$19,524	$208	-$1,768	$2,161	$3,327	N/A	N/A	N/A	S2718M6, S3524V6, or F6	900 SF	6,170 lbs
SQR-30TG	$19,488	$208	-$1,768	$2,161	$3,327	$1,869	$5,577	$8,387	S2718M6, W6, S3524V6, or F6	900 SF	11,175 lbs
SQR-36SP	$29,440	$208	-$2,458	$3,006	$4,625	$2,595	$7,655	$11,310	S2718M6, W6, S3524V6, or F6	1296 SF	12,345 lbs
SQR-36MR	$25,536	$208	-$2,458	$3,006	$4,625	N/A	N/A	N/A	S2718M6, S3524V6, or F6	1296 SF	8,600 lbs
SQR-36TG	$25,607	$208	-$2,458	$3,006	$4,625	$2,595	$7,655	$11,310	S2718M6, W6, S3524V6, or F6	1296 SF	15,730 lbs
SQR-40SP	$40,631	$208	-$3,899	$4,768	$6,583	$3,232	$9,274	$13,452	S2718M6, W6, S3524V6, or F6	1600 SF	17,670 lbs
SQR-40MR	$35,964	$208	-$3,899	$4,768	$6,583	N/A	N/A	N/A	S2718M6, S3524V6, or F6	1600 SF	12,950 lbs
SQR-40TG	$35,917	$208	-$3,899	$4,768	$6,583	$3,232	$9,274	$13,452	S2718M6, W6, S3524V6, or F6	1600 SF	21,550 lbs
SQR-50SP	$59,244	$375	-$5,003	$6,113	$8,446	$5,208	$13,661	$19,649	S2718M6, W6, S3524V6, or F6	2500 SF	24,455 lbs
SQR-50MR	$52,149	$375	-$5,003	$6,113	$8,446	N/A	N/A	N/A	S2718M6, S3524V6, or F6	2500 SF	17,225 lbs
SQR-50TG	$52,244	$375	-$5,003	$6,113	$8,446	$5,208	$13,661	$19,649	S2718M6, W6, S3524V6, or F6	2500 SF	30,275 lbs

List price includes: Powder Coated frame

FOR SQUARE	
S2718W6	$1,107
S3524V6	$2,577
S2718M6	$815
S3524F6	$2,577

WOOD LOUVERED (ornamental only: attaches to wood roof deck)
LARGE STEEL FRAME WITH LOUVERS (functional: attached to compression ring, to install roof panels must be cut back on site)
SMALL SHEET METAL LOUVERED HIGH PITCH (ornamental only: attaches to any roof deck)
LARGE STEEL FRAME OPEN (functional: attached to compression ring, to install roof panels must be cut back on site)

Note: steel frame cupolas can be made available on any square but changes the type of building to "modified" and requires additional lead time.

Prices based on 100 MPH wind speed, higher velocities will be quoted based on enginneering requirements.
Signed Sealed Drawings and Calculation Books are priced by project. Shipping and handling by quote.

poligon® *SUN SHELTER*

RFP NO.08/09-3 Clay County, FL
Various Equipment & Amenities for Parks & Playgrounds
Rep Services, Inc.
902 Waterway Place
Longwood, FL 32750
407-831-9658
www.repservices.com

					FOR USE ON SP OR TG ROOF DECK				
MODEL NO.	LIST PRICE	ADD TO POWDERCOAT FRAME	ADD TO ECOAT/ POWDERCOAT FRAME	ADD TO HOT DIP GALVANIZE FRAME	ADD FOR SHINGLE PKG.	ADD FOR MULTI-RIB METAL ROOFING	ADD FOR STANDING SEAM METAL ROOFING	AREA UNDER ROOF	APPROX WEIGHT
SUNB-SP	$5,054	-$295	$351	$702	$113	$893	$929	64 SF	1,320 lbs
SUNB-MR	$4,851	-$295	$351	$702	N/A	N/A	N/A	64 SF	970 lbs
SUNB-TG	$4,792	-$295	$351	$702	$113	$893	$929	64 SF	1,415 lbs
SUNC-SP	$4,327	-$193	$238	$470	$113	$893	$929	64 SF	1,040 lbs
SUNC-MR	$4,125	-$193	$238	$470	N/A	N/A	N/A	64 SF	685 lbs
SUNC-TG	$4,065	-$193	$238	$470	$113	$893	$929	64 SF	1,130 lbs
SUND-SP	$3,411	-$193	$232	$458	$113	$893	$929	64 SF	1,085 lbs
SUND-MR	$3,220	-$193	$232	$458	N/A	N/A	N/A	64 SF	730 lbs
SUND-TG	$3,161	-$193	$232	$458	$113	$893	$929	64 SF	1,180 lbs
SUNN-SP	$3,060	-$190	$232	$458	$113	$893	$929	64 SF	965 lbs
SUNN-MR	$2,857	-$190	$232	$458	N/A	N/A	N/A	64 SF	610 lbs
SUNN-TG	$2,798	-$190	$232	$458	$113	$893	$929	64 SF	1,055 lbs
SUNT-SP	$4,042	-$265	$327	$643	$113	$893	$929	64 SF	1,200 lbs
SUNT-MR	$3,851	-$265	$327	$643	N/A	N/A	N/A	64 SF	845 lbs
SUNT-TG	$3,792	-$265	$327	$643	$113	$893	$929	64 SF	1,290 lbs

LIST PRICE INCLUDES:
SUNB: POWDER COATED FRAME, BRACKETS AND DURAWOOD RECYCLED PLASTIC LUMBER FOR BENCH
SUNC: POWDER COATED FRAME, (1) enclosed locking display case, (Double sided display case available.)
SUND: POWDER COATED FRAME, BRACKETS AND WOOD FOR DISPLAY BOARD
SUNN: POWDER COATED FRAME
SUNT: POWDER COATED FRAME, BRACKETS AND DURAWOOD RECYCLED PLASTIC LUMBER FOR TABLE/SEATS

Prices based on 100 MPH wind speed, higher velocities will be quoted based on enginneering requirements.
Signed Sealed Drawings and Calculation Books are priced by project. Shipping and handling by quote.

poligon® *CLERESTORY SHELTERS TIARA*

RFP NO.08/09-3 Clay County, FL
Various Equipment & Amenities for Parks & Playgrounds
Rep Services, Inc.
902 Waterway Place
Longwood, FL 32750
407-831-9658
www.repservices.com

						ON SANDWICH PANEL OR T&G ROOF				
MODEL NO.	LIST PRICE	ANCHOR BOLTS	DEDUCT FOR PRIME PAINT	ADD TO ECOAT/ POWDERCOAT FRAME	ADD TO HOT DIP GALVANIZE FRAME	ADD FOR SHINGLE PKG.	ADD FOR MULTI-RIB METAL ROOFING	ADD FOR STANDING SEAM METAL ROOFING	AREA UNDER ROOF	APPROX WEIGHT
TIA-26x17SP	$27,500	$292	-$1,929	$2,351	$3,619	$1,173	$4,798	$5,601	485 SF	7,605 lbs
TIA-26x17MR	$25,268	$292	-$2,003	$2,452	$3,774	N/A	N/A	N/A	485 SF	6,120 lbs
TIA-26x17TG	$25,244	$292	-$2,003	$2,452	$3,774	$1,173	$4,798	$5,601	485 SF	9,485 lbs
TIA-41x29SP	$43,435	$292	-$3,193	$3,899	$6,000	$2,607	$8,512	$11,435	1145 SF	14,050 lbs
TIA-41x29MR	$37,423	$292	-$3,229	$3,946	$6,077	N/A	N/A	N/A	1145 SF	10,335 lbs
TIA-41x29TG	$38,470	$292	-$3,229	$3,946	$6,077	$2,607	$8,512	$11,435	1145 SF	17,790 lbs
TIA-46x31SP	$50,798	$292	-$3,744	$4,577	$7,048	$2,911	$9,351	$12,357	1367 SF	16,140 lbs
TIA-46x31MR	$44,512	$292	-$3,821	$4,673	$7,190	N/A	N/A	N/A	1367 SF	12,095 lbs
TIA-46x31TG	$45,560	$292	-$3,821	$4,673	$7,190	$2,911	$9,351	$12,357	1367 SF	20,270 lbs

LIST PRICE INCLUDES:
POWDER COATED FRAME
NO HANDRAILS OR ORNAMENTATION. IF ACCESSORIES ARE DESIRED, CONTACT FACTORY FOR QUOTE.

Prices based on 100 MPH wind speed, higher velocities will be quoted based on enginneering requirements.
Signed Sealed Drawings and Calculation Books are priced by project. Shipping and handling by quote.

poligon® *WOOSTER GAZEBOS*

RFP NO.08/09-3 Clay County, FL
Various Equipment & Amenities for Parks & Playgrounds
Rep Services, Inc.
902 Waterway Place
Longwood, FL 32750
407-831-9658
www.repservices.com

MODEL NO.	LIST PRICE	ANCHOR BOLTS	AREA UNDER ROOF
WOO-18SPSS	$63,679	$375	230 SF
WOO-20SPSS	$66,940	$375	283 SF
WOO-22SPSS	$69,905	$375	343 SF

List price includes the following SPECIAL FEATURES:
1. Wooster style railing and ornamentation package.
2. Powder coated frame and railing and ornamentation package.
3. Dual premium roof deck/roofing system which consists of
   Structural Insulated Panel roof deck with standing seam metal roofing.

Note: It is recommended that the underside of the SIP panel be stained or sealed on site prior t
Powder coated frame and railing components should be handled carefully and may require field
(Poligon will provide touch up paint.)

Prices based on 100 MPH wind speed, higher velocities will be quoted based on enginneering requirements.
Signed Sealed Drawings and Calculation Books are priced by project. Shipping and handling by quote.

poligon® *WAYSIDE*

RFP NO.08/09-3 Clay County, FL
Various Equipment & Amenities for Parks & Playgrounds
Rep Services, Inc.
902 Waterway Place
Longwood, FL 32750
407-831-9658
www.repservices.com

						FOR USE ON SP OR TG ROOF DECK				
MODEL NO.	LIST PRICE	ANCHOR BOLTS	DEDUCT FOR PRIME PAINT	ADD TO ECOAT/ POWDERCOAT FRAME	ADD TO HOT DIP GALVANIZE FRAME	ADD FOR SHINGLE PKG.	ADD FOR MULTI-RIB METAL ROOFING	ADD FOR STANDING SEAM METAL ROOFING	AREA UNDER ROOF	APPROX WEIGHT
WSD-12x12SP	$8,262	#REF!	-$506	$613	$1,101	$310	$1,881	$2,315	144 SF	2,180 lbs
WSD-12x12MR	$7,940	#REF!	-$506	$613	$1,101	N/A	N/A	N/A	144 SF	1,620 lbs
WSD-12x12TG	$8,000	#REF!	-$506	$613	$1,101	$310	$1,881	$2,315	144 SF	2,815 lbs
WSD-14x19SP	$11,583	$208	-$804	$970	$1,750	$518	$2,917	$4,161	266 SF	3,490 lbs
WSD-14x19MR	$11,083	$208	-$804	$970	$1,750	N/A	N/A	N/A	266 SF	2,615 lbs
WSD-14x19TG	$11,321	$208	-$804	$970	$1,750	$518	$2,917	$4,161	266 SF	4,710 lbs
WSD-20x20SP	$14,488	$208	-$1,060	$1,292	$2,315	$607	$3,351	$4,649	400 SF	4,690 lbs
WSD-20x20MR	$13,417	$208	-$1,060	$1,292	$2,315	N/A	N/A	N/A	400 SF	3,470 lbs
WSD-20x20TG	$13,881	$208	-$1,060	$1,292	$2,315	$607	$3,351	$4,649	400 SF	6,130 lbs
WSD-20x27SP	$17,476	$208	-$1,351	$1,649	$2,536	$851	$4,274	$6,375	540 SF	6,090 lbs
WSD-20x27MR	$15,988	$208	-$1,351	$1,649	$2,536	N/A	N/A	N/A	540 SF	4,420 lbs
WSD-20x27TG	$16,893	$208	-$1,351	$1,649	$2,536	$851	$4,274	$6,375	540 SF	8,210 lbs
WSD-26x30SP	$25,821	$208	-$2,238	$2,732	$4,208	$1,196	$5,417	$8,637	780 SF	9,655 lbs
WSD-26x30MR	$23,036	$208	-$2,238	$2,732	$4,208	N/A	N/A	N/A	780 SF	7,140 lbs
WSD-26x30TG	$24,571	$208	-$2,238	$2,732	$4,208	$1,196	$5,417	$8,637	780 SF	12,380 lbs
WSD-30x40SP	$38,512	$208	-$3,357	$4,095	$6,310	$1,756	$7,482	$13,280	1200 SF	13,880 lbs
WSD-30x40MR	$35,202	$208	-$3,357	$4,095	$6,310	N/A	N/A	N/A	1200 SF	10,640 lbs
WSD-30x40TG	$37,060	$208	-$3,357	$4,095	$6,310	$1,756	$7,482	$13,280	1200 SF	17,710 lbs

List price includes: Powder Coated Frame with Open Gables
Call Factory for Gable and Eave Ornamentation

Prices based on 100 MPH wind speed, higher velocities will be quoted based on enginneering requirements.
Signed Sealed Drawings and Calculation Books are priced by project. Shipping and handling by quote.

RFP NO.08/09-3 Clay County, FL
Various Equipment & Amenities for Parks & Playgrounds
Rep Services, Inc.
902 Waterway Place
Longwood, FL 32750
407-831-9658
www.repservices.com

pinnacle™ WOOD SHELTERS parasol™ FABRIC COVERED SHADE SHELTERS

Pinnacle Wood Shelters: by quote

Parasol Shade Structures: by quote

PorterCorp Price List 2008 **11/20/08**

Prices based on 100 MPH wind speed, higher velocities will be quoted based on enginneering requirements.
Signed Sealed Drawings and Calculation Books are priced by project. Shipping and handling by quote.

pinnacle™ WOOD SHELTERS parasol™ FABRIC COVERED SHADE SHELTERS

Pinnacle Wood Shelters: by quote

Parasol Shade Structures: by quote

pinnacle™ WOOD SHELTERS parasol™ FABRIC COVERED SHADE SHELTERS

Pinnacle Wood Shelters: by quote

Parasol Shade Structures: by quote

IRVINE
WOOD RECOVERY

Playground Turf (Engineered Wood Fiber)
2008 Price List

Price per cubic yard: $20.50
Discount = 5% (.97 per cubic yard)
Price after discount: $19.45

Price does not include delivery

Specifications for Playground Turf

IPEMA Certified to ASTM F1292-04
- Head Impact Attenuation Testing
  - Required for IPEMA Certification

IPEMA Certified to ASTM F 2075-04
- Sieve Analysis Testing
  - Required for IPEMA Certification
- Tramp Metal Testing, ASTM 2075/4.6
  - Required for IPEMA Certification

ADA WHEELCHAIR ACCESSIBILITY
- ASTM F1951-99

Tested to 12" of thickness from a 12' fall height
Written Quality Assurance Program
Installation Instructions
Installation is not included in price above

110 GLENDALE-MILFORD ROAD P.O. BOX 110 MIAMIVILLE, OHIO 45147
513.831.0060 FAX 513.831.3637 WWW.IRVINEWOODRECOVERY.COM

ForeverLawn™ INC. Florida

2008 Pricing for ForeverLawn, Inc Products

11/20/2008

Description	Price
Playground Grass within FallZone– 9' fall ht.	$12.00 PSF Installed
Playground Grass within FallZone – 12' fall ht.	$12.50 PSF Installed
Endura Playground Grass within Fall Zone	$12.00 PSF Installed
ForeverLawn Extreme and Select Grasses - NO Fall	$10.50 PSF Installed
ForeverLawn Specialty Grasses	BY QUOTE

Playground Grass Systems include Grass, base of recycled concrete fines, rubber mulch, fastening material, labor and rubber infill (if needed).

ForeverLawn Extreme and Select Grasses price includes grass, rubber infill, fastening material, and labor for NO Fall Zone
The Playground Grass system meets all requirements of ASTM Specification F 1951-99.
Playground Grass-9 is certified to ASTM 1292 -04 for a 9'fall height.
Playground Grass-12 is certified to ASTM 1292 -04 for a 12'fall height.

Ground preparation to required subgrade by quote or provided by owner.

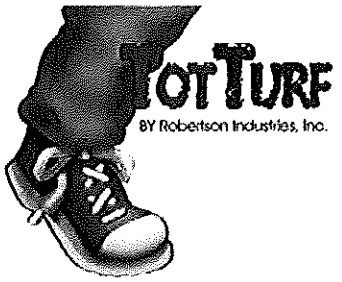

TotTurf Pricing for:

PRICING DATE 11/2008

RFP NO. 08/09-3 Clay County, FL
Various Equipment & Amenities for Parks & Playgrounds
Rep Services, Inc.
902 Waterway Place
Longwood, FL 32750
407-831-9658
www.repservices.com

What is included:

1. Robertson Industries, Inc. will install Totturf, a durable IPEMA certified accessible safety surfacing, which shall meet or exceed the performance requirements of CPSC and ASTM F1292-04.
2. The top 1/2" wear layer color is 50/50 blend black and standard color EPDM/TPV granuals. Choose from terracotta red, tan, green and blue. 100% color may be used as shown below. Design work meeting our standard graphics criteria may be provided with no additional charge.
3. Two (2) year warranty.
4. Various options are available, as noted below, for inclusion of design, specialty / custom color, and Davis-Bacon wages.

Not Included:

1. All site preparation, sub-base installation and fencing / security must be provided by others.
2. Freight will be added to actual project on the materials only.

Price per square foot
$5,000 minimum order

Fall Height	4'	5'	6'	7' / 8'	9'	10' / 11'
System Thickness	2"	2.5"	3"	3.5"	4"	4.5"
Pad size	list price	list price	list price	list price	list price	list price
<1,000 sf	$15.73	$16.16	$17.39	$17.97	$19.42	$20.34
1,001 - 2,000 sf	$12.93	$13.87	$14.58	$15.47	$16.47	$17.45
2,001 - 3,000 sf	$12.85	$13.42	$14.30	$15.07	$16.04	$16.82
>3,000 sf	$11.91	$12.46	$13.47	$14.09	$15.34	$15.95

OPTIONS:	ADD ON:
A. DESIGN	
a. SECOND COLOR MIX	5% OF SALE PRICE
b. EXTENSIVE DESIGN (COMPLETE GRAPHICS)	10% - 15% OF SALE PRICE
B. PREVAILING WAGE / DAVIS BEACON WAGE ACT	5% OF SALE PRICE
C. 100% COLOR	$1.05 PER SQUARE FOOT
D. INSURANCE (PRIMARY WORDING / WAIVER OF SUBROGATION)	$600
E. PERFORMANCE / PAYMENT BONDING	2.5% OF SALE PRICE

SUB-CONTRACTOR EQUIPMENT INSTALLERS:

Business Name: Al Bosgraaf & Sons, Inc.

Address: 2032 Dumas Drive, Deltona, FL 32738

Phone Number: 407-402-8495

Contact Name: Gerald Bosgraaf

Business Name: D.W. Recreation Services, Inc.

Address: 2728 Great Oak Drive, Lake Worth, FL 33461

Phone Number: 562-818-4819

Contact Name: Donald West

Business Name: Johnny Pitts Construction, Inc.

Address: 4124 Pace Lane

Phone Number: 850-232-1615

Contact Name: Johnny Pitts

Note: Attach vendor/manufacturer WRITTEN CERTIFICATION (s) naming bidder, and/or each of its sub-contractor installer(s), as an aut horized installer certified to install park and pl ayground equipment as required by each manufacturer. Failure to comply with this provision may result in rejection of bid.

** Landscape Structures, Inc. and SofSurfaces are the only manufactures listed that have installation certification programs and require installers to be certified. All required certifications are attached. **

SUB-CONTRACTOR EQUIPMENT INSTALLERS:

Business Name: Precision Playgrounds

Address: 5120 Damascus Road N, Jacksonville, FL 32207

Phone Number: 904-313-2489

Contact Name: Scott Craft

Business Name: Titus Gunter Company, Inc.

Address: 6851 Robinson Road, Jacksonville, FL 32220

Phone Number: 904-449-1150

Contact Name: Titus Gunter

Business Name: _____

Address: _____

Phone Number: _____

Contact Name: _____

Note: Attach vendor/manufacturer WRITTEN CERTIFICATION (s) naming bidder, and/or each of its sub-contractor installer(s), as an aut horized installer certified to install park and pl ayground equipment as required by each manufacturer. Failure to comply with this provision may result in rejection of bid.

** Landscape Structures, Inc. and SofSurfaces are the only manufactures listed that have installation certification programs and require installers to be certified. All required certifications are attached. **

landscape structures™

11/25/08

This letter is formal notification that the playground installer:

Titus Gunter Company, Inc.
6851 Robinson Road
Jacksonville, FL 32220

has been approved by Landscape Structures as a Certified Installer for installing the full line of Landscape Structures products in accordance to the installation specifications and instructions we publish.

To be a Certified Installer for Landscape Structures means we have reviewed their installation operation and actual field work and found them to meet our standards of quality and service.

We are happy to recommend Titus Gunter Company Inc as one of our valued Certified Installers.

Regards,

Tim

Tim Barrett
Business Development Manager
Landscape Structures, Inc.

601 7th St. South, P.O. Box 198, Delano, MN 55328-0918, Tel 763.972.3391, 888.4FUNLSI, Fax 763.972.3185, playlsi.com

landscape structures™

11/25/08

This letter is formal notification that the playground installer:

Precision Playgrounds, Inc.
5120 Damascus Road N
Jacksonville, FL 32207

has been approved by Landscape Structures as a Certified Installer for installing the full line of Landscape Structures products in accordance to the installation specifications and instructions we publish.

To be a Certified Installer for Landscape Structures means we have reviewed their installation operation and actual field work and found them to meet our standards of quality and service.

We are happy to recommend Precision Playgrounds Inc as one of our valued Certified Installers.

Regards,

Tim

Tim Barrett
Business Development Manager
Landscape Structures, Inc.

landscape structures™

11/25/08

This letter is formal notification that the playground installer:

Johnny Pitts Construction, Incorporated
4124 Pace Lane
Milton, FL 32571

has been approved by Landscape Structures as a Certified Installer for installing the full line of Landscape Structures products in accordance to the installation specifications and instructions we publish.

To be a Certified Installer for Landscape Structures means we have reviewed their installation operation and actual field work and found them to meet our standards of quality and service.

We are happy to recommend Johnny Pitts Construction Incorporated as one of our valued Certified Installers.

Regards,

Tim

Tim Barrett
Business Development Manager
Landscape Structures, Inc.

601 7th St. South, P.O. Box 198, Delano, MN 55328-0918, Tel 763.972.3391, 888.4FUNLSI, Fax 763.972.3185, playlsi.com

landscape structures™

· 11/25/08

This letter is formal notification that the playground installer:

D.W. Recreation Services, Inc.
2728 Great Oak Drive
Lake Worth, FL 33461

has been approved by Landscape Structures as a Certified Installer for installing the full line of Landscape Structures products in accordance to the installation specifications and instructions we publish.

To be a Certified Installer for Landscape Structures means we have reviewed their installation operation and actual field work and found them to meet our standards of quality and service.

We are happy to recommend D.W. Recreation Services Inc as one of our valued Certified Installers.

Regards,

Tim

Tim Barrett
Business Development Manager
Landscape Structures, Inc.

601 7th St. South, P.O. Box 198, Delano, MN 55328-0918, Tel 763.972.3391, 888.4FUNLSI, Fax 763.972.3185, playlsi.com

landscape structures™

11/25/08

This letter is formal notification that the playground installer:

Al Bosgraaf & Sons, Inc.
2032 Dumas Drive
Deltona, FL 32738

has been approved by Landscape Structures as a Certified Installer for installing the full line of Landscape Structures products in accordance to the installation specifications and instructions we publish.

To be a Certified Installer for Landscape Structures means we have reviewed their installation operation and actual field work and found them to meet our standards of quality and service.

We are happy to recommend Al Bosgraaf & Sons, Inc as one of our valued Certified Installers.

Regards,

Tim

Tim Barrett
Business Development Manager
Landscape Structures, Inc.

601 7th St. South, P.O. Box 198, Delano, MN 55328-0918, Tel 763.972.3391, 888.4FUNLSI, Fax 763.972.3185, playlsi.com

Nov 25, 2008

Re: Clay County, FL #08/09-03 Various Equipment & Amenities for Parks & Playgrounds

To whom it may concern:

Please accept this letter as confirmation that Gerald Bosgraaf of Al Bosgraff & Sons Inc of 2032 Dumas Drive, Deltona, FL 32738 has met the requirements of SofSURFACES SofTILE installation certification program and is considered an approved SofTILE installer for the Clay County, FL #08/09-03 Various Equipment & Amenities for Parks & Playgrounds contract. Should you require any further information, please feel free to contact us accordingly.

Regards,

Chad Morningstar
Sales Manager,
SofSURFACES Inc.
PO Box 239, 4393 Discovery Line
Petrolia ON NON 1R0
Phn: 800 263 2363 (ext 219)
Fax: 519 882 2697
Email: morningc@sofsurfaces.com

Nov 25, 2008

Re: Clay County, FL #08/09-03 Various Equipment & Amenities for Parks & Playgrounds

To whom it may concern:

Please accept this letter as confirmation that Titus Gunter of Titus Gunter Company, Inc of 6851 Robinson Road, Jacksonville, FL 32220 has met the requirements of SofSURFACES SofTILE installation certification program and is considered an approved SofTILE Installer for the Clay County, FL #08/09-03 Various Equipment & Amenities for Parks & Playgrounds contract. Should you require any further information, please feel free to contact us accordingly.

Regards,

Chad Morningstar
Sales Manager,
SofSURFACES Inc.
PO Box 239, 4393 Discovery Line
Petrolia ON NON 1R0
Phn: 800 263 2363 (ext 219)
Fax: 519 882 2697
Email: morningc@sofsurfaces.com

Nov 25, 2008

Re: Clay County, FL #08/09-03 Various Equipment & Amenities for Parks & Playgrounds

To whom it may concern:

Please accept this letter as confirmation that Scott Craft of Precision Playgrounds, Inc of 5120 Damascus Road N, Jacksonville, FL 32207 has met the requirements of SofSURFACES SofTILE installation certification program and is considered an approved SofTILE installer for the Clay County, FL #08/09-03 Various Equipment & Amenities for Parks & Playgrounds contract. Should you require any further information, please feel free to contact us accordingly.

Regards,

Chad Morningstar
Sales Manager,
SofSURFACES Inc.
PO Box 239, 4393 Discovery Line
Petrolia ON NON 1R0
Phn: 800 263 2363 (ext 219)
Fax: 519 882 2697
Email: morningc@sofsurfaces.com

Nov 25, 2008

Re: Clay County, FL #08/09-03 Various Equipment & Amenities for Parks & Playgrounds

To whom it may concern:

Please accept this letter as confirmation that Johnny Pitts of Johnny Pitts Construction, Inc of 4124 Pace Lane, Milton, FL 32571 has met the requirements of SofSURFACES SofTILE installation certification program and is considered an approved SofTILE installer for the Clay County, FL #08/09-03 Various Equipment & Amenities for Parks & Playgrounds contract. Should you require any further information, please feel free to contact us accordingly.

Regards,

Chad Morningstar
Sales Manager,
SofSURFACES Inc.
PO Box 239, 4393 Discovery Line
Petrolia ON NON 1R0
Phn: 800 263 2363 (ext 219)
Fax: 519 882 2697
Email: morningc@sofsurfaces.com

Nov 25, 2008

Re: Clay County, FL #08/09-03 Various Equipment & Amenities for Parks & Playgrounds

To whom it may concern:

Please accept this letter as confirmation that Donald West of D.W. Recreation Services, Inc of 2728 Great Oak Drive, Lake Worth, FL 33461 has met the requirements of SofSURFACES SofTILE Installation certification program and is considered an approved SofTILE Installer for the Clay County, FL #08/09-03 Various Equipment & Amenities for Parks & Playgrounds contract. Should you require any further information, please feel free to contact us accordingly.

Regards,

Chad Morningstar
Sales Manager,
SofSURFACES Inc.
PO Box 239, 4393 Discovery Line
Petrolia ON NON 1R0
Phn: 800 263 2363 (ext 219)
Fax: 519 882 2697
Email: morningc@sofsurfaces.com

WARRANTY INFORMATION FORM

MAKE AND MODEL OF EQUIPMENT PROPOSED: Please see accompanying catalogs

Is there a warranty on the equipment proposed? X Yes ____ No

Does the warranty apply to ALL components or only part? (State Explicitly)

All components in accordance with the attached warranties.

Parts Warranty Period: 1 year Service Warranty Period: 1 year

Nearest source for parts and/or service center (s):

Rep Services, Inc.

Name, address and phone number of the authorized service center (s):

1) Rep Services, Inc., 902 Waterway Place, Longwood, FL, 32750

2) ____

3) ____

Name, address and phone number of the authority issuing this warranty: (Manufacturer, Distributor, etc.)

Rep Services, Inc., 902 Waterway Place, Longwood, FL, 32750, 407-831-9658

COPY OF COMPLETE WARRANTY STATEMENT IS SUBMITTED HEREWITH: X Yes ____ No

Name of Bidder: Rep Services, Inc.

Signature ____

Title President Phone Number 407-831-9658

Warranty period must meet or exceed the warranty conditions as stated in the specifications on the bid

IRVINE
WOOD RECOVERY

Playground Turf
by
Irvine Wood Recovery

Limited Warranty

This limited warranty applies to Irvine Wood Recovery's Engineered Wood Fiber product Playground Turf.

Playground Turf is warranted to meet the following specifications:

IPEMA Certified to ASTM F1292-04
Head Impact Attenuation Testing

IPEMA Certified to ASTM F 2075-04
Sieve Analysis Testing
Tramp Metal Testing, ASTM 2075/4.6

ADA WHEELCHAIR ACCESSIBILITY
ASTM F1951-99

Tested to 12" of thickness from a 12' fall height

110 GLENDALE-MILFORD ROAD P.O. BOX 110 MIAMIVILLE, OHIO 45147
513.831.0060 FAX 513.831.3637 WWW.IRVINEWOODRECOVERY.COM

NOTICE OF DECISION BY THE BOARD OF COUNTY COMMISSIONERS OF CLAY COUNTY, FLORIDA, ON BID NO. 08/09-3
Various Equipment and Amenities for Parks and Playgrounds

In accordance with the provisions of Section 120.57 (3), Florida Statutes, notice is hereby given and posted of the decision of the Board of County Commissioners of Clay County, Florida (hereinafter the "Board") with respect to Bid No.: 08/09-3. Bids were opened on December 2, 2008. On January 13, 2009, the Board during its regular meeting rendered its decision to post the notice of intent and to award the bid to various vendors immediately following the 72-hour posting period provided no protest is filed. Attached hereto is a Bid Recommendation for Bid No. 08/09-3. The decision of the Board is final. Failure to file a protest within the time prescribed in Section 120.57(3), Florida Statutes, shall constitute a waiver of proceedings under Chapter 120, Florida Statutes.

Fritz A. Behring
County Manager

Date of Posting: January 15, 2009

Time of Posting: 9:40 AM

Initials: DS

Date of Removal: January 21, 2009

Time of Removal: 8:45 AM

Initials: DS

BID RECOMMENDATION SHEET
December 2, 2008
(Please Highlight Bid to Be Recommended)
BID #08/09 - 3
Various Equipment and Amenities for Parks and Playgrounds

BIDDERS	BOND	BASE BID
Qitele Playgrounds	N/A	See Attached
Site Creations	N/A	See Attached
Advanced Recreation	N/A	See Attached
Miller Recreation	N/A	See Attached
No Fault Sport Group	N/A	See Attached
M. Gay Constructors	N/A	See Attached
Kids Play Inc	N/A	See Attached
Sports Supply Group	N/A	See Attached
Musco Sports Lighting	N/A	See Attached
RCP Shelters	N/A	See Attached
Bliss Products	N/A	See Attached
Kool Playgrounds	N/A	See Attached
REP Services	N/A	See Attached
Play It Safe	N/A	See Attached
Site Horizons	N/A	See Attached

Staff Assigned to Tabulate Bids and Make Recommendations:

NAME	TITLE
Tom Price	Division Director

RECOMMENDATION:

It is staff's recommendation to accept all bids submitted except that of Kids Play Inc. as they did not comply with bid instructions. All bids are awarded based upon the % discount offered for products and service.

PRICE AGREEMENT CONTRACT FOR VARIOUS EQUIPMENT AND AMENITIES

FOR PARKS AND PLAYGROUNDS

Bid # 08/09-3

Manufacturer	Product	Distributor	Discount Allowed from MSRP	Installation	Catalog Provided	Current MSRP List Supplied
Wabash Valley	Plastisol-Coated Furniture	**Site Horizons** 407-947-6318	2%	30%	YES	YES
Playpower LT Farmington	Playground Equipment	**Site Horizons** 407-947-6318	2%	30%	YES	YES
Zeager Wood Carpet Mulch	Wood Playground Surfacing	**Site Horizons** 407-947-6318	5%	40%	YES	NO
Vitriturf	Cushioned Seamless Flooring	**Site Horizons** 407-947-6318	5%	30%	YES	NO
PW Athletic Manufacturing Inc	Athletic/Site Furnishings	**Site Horizons** 407-947-6318	5%	30%	YES	YES
Victor Stanley	Site Furnishings	**Site Horizons** 407-947-6318	5%	30%	YES	YES
Miracle Recreation Equipment	Playground Equipment	**Miller Recreation** 941-792-4580	8% $0-$4,999	23% 0-$9,999	YES	YES
Miracle Recreation Equipment	Playground Equipment	**Miller Recreation** 941-792-4580	12% $5,000-$9,999	23% 0-$9,999	YES	YES
Miracle Recreation Equipment	Playground Equipment	**Miller Recreation** 941-792-4580	15% $10,000-$17,999	25% $10,000-$24,999	YES	YES
Miracle Recreation Equipment	Playground Equipment	**Miller Recreation** 941-792-4580	18% $18,000-$24,999	25% $10,000-$24,999	YES	YES
Miracle Recreation Equipment	Playground Equipment	**Miller Recreation** 941-792-4580	20% $25,000-above	26% $25,000-above	YES	YES
Litchfield Landscape Elements	Shelters/Pavilions	**Miller Recreation** 941-792-4580	8%	N/A	YES	YES
Fibar Systems	Playground Surfacing	**Miller Recreation** 941-792-4580	10%	N/A	YES	NO
Kencoat	Site Amenities	**Miller Recreation** 941-792-4580	10%	N/A	YES	NO

Manufacturer	Product	Distributor	Discount Allowed from MSRP	Installation	Catalog Provided	Current MSRP List Supplied
Foresite Designs	Plastic Wooden Benches	**Miller Recreation** 941-792-4580	5%	N/A	YES	NO
Xccent Play	Playground Equip. and Site Amenities	**Miller Recreation** 941-792-4580	8%	25%	YES	YES
Forever Lawn	No Catalog Provided	**Miller Recreation** 941-792-4580	5%	26%	NO	NO
Shade Systems Inc.	Portable/Canvas Shade Systems	**Miller Recreation** 941-792-4580	5%	N/A	YES	NO
Bison Sports Group	Miscellaneous Sports Equipment	**Miller Recreation** 941-792-4580	5%	N/A	YES	NO
Union Land Inc.	Playground Equipment	**Play It Safe Inc** 877-748-9444	8%	30%	YES	YES
Webcoat	Site Amenities	**Play It Safe Inc** 877-748-9444	6%	34%	YES	YES
Ultra Play Inc.	Site Amenities	**Play It Safe Inc** 877-748-9444	6%	34%	YES	YES
RCP Shelters	Shelters	**Play It Safe Inc** 877-748-9444	7%	95%	YES	YES
RCP Shelters	Shelters	**RCP Shelters** 800-525-0207	15%	N/A/	YES	YES
BSN/Collegiate Pacific	Miscellaneous Sports Equipment	**Sports Supply Grp** 800-445-9446	10%	Per Job Basis	YES	YES
US Games	Miscellaneous Sports Equipment	**Sports Supply Grp** 800-445-9446	10%	Per Job Basis	YES	YES
No Fault Sport Group LLC	Playground Surfacing	**No Fault Sport Grp** 225-215-7760	5%	Included in Price	YES	YES
Qitele Playgrounds LLC	Playground Equipment	**Qitele Playgrounds** 904-386-4747	10%	35%	YES	YES
Qitele Playgrounds LLC	Playground Equipment	**Site Creations** 904-386-4747	None	None	YES	YES
Landscape Brands	Miscellaneous Site Amenities	**Site Creations** 904-386-4747	5%	30%	YES	YES
Cedar Forest Products	Shelters/Gazebos/ Bridges/Buildings	**Site Creations** 904-386-4747	5%	45-65%	YES	YES

Manufacturer	Product	Distributor	Discount Allowed from MSRP	Installation	Catalog Provided	Current MSRP List Supplied
Thomas Steele	Miscellaneous Site Amenities	**Site Creations** 904-386-4747	5%	30%	YES	YES
Surface America	UNKNOWN	**Site Creations** 904-386-4747	5%	30%	NO	NO
Earthscapes	UNKNOWN	**Site Creations** 904-386-4747	5%	35%	NO	NO
FIDO PARK/LUCKY DOG	UNKNOWN	**Site Creations** 904-386-4747	5%	30%	NO	NO
SHADE	UNKNOWN	**Site Creations** 904-386-4747	5%	45%	NO	NO
All Star Bleachers	Bleachers and Grandstands	**Site Creations** 904-386-4747	5%	30-65%	YES	YES
Patterson Williams	Various Sports/Site Amenities	**Site Creations** 904-386-4747	5%	30-65%	YES	YES
Raindrop	UNKNOWN	**Site Creations** 904-386-4747	5%	30-65%	YES	YES
Ultra Coat/Play	Various Site Amenities	**Site Creations** 904-386-4747	5%	30%	YES	YES
Madrax	Bike Racks	**Site Creations** 904-386-4747	5%	30%	YES	YES
Kay Park	Miscellaneous Site Amenities	**Site Creations** 904-386-4747	5%	25-50%	YES	YES
Playground Mulch	Wood Mulch	**Site Creations** 904-386-4747	5%	$10.00 per cu. yd. to install	NO	NO
Rubber Mulch	Rubber Mulch	**Site Creations** 904-386-4747	5%	$10.00 per cu. yd. to install	NO	NO
Playland	Playground Equipment	**Kool Playgrounds** 407-891-8017	10%	35%	YES	YES
Progressive Design Playgrounds	Playground Equipment	**Kool Playgrounds** 407-891-8017	10%	35%	YES	YES

Manufacturer	Product	Distributor	Discount Allowed from MSRP	Installation	Catalog Provided	Current MSRP List Supplied
Tri-Active Fitness	Fitness Equipment	**Kool Playgrounds** 407-891-8017	5%	30%	YES	YES
Sports Play	Playground Equipment	**Kool Playgrounds** 407-891-8017	10%	35%	YES	YES
SII Structures	Pavilions and Gazebos	**Kool Playgrounds** 407-891-8017	5%	75%	YES	NO
Superior Shade	Shade Structures	**Kool Playgrounds** 407-891-8017	5%	50%	YES	NO
Web Coat	Various Site Amenities	**Kool Playgrounds** 407-891-8017	5%	35%	YES	YES
Kay Park Recreation	Various Site Amenities	**Kool Playgrounds** 407-891-8017	10%	35%	YES	YES
Ultra Play	Various Site Amenities	**Kool Playgrounds** 407-891-8017	10%	35%	YES	NO
Kool Play Surfacing	Playground Surfacing	**Kool Playgrounds** 407-891-8017	10%	Included	YES	NO
Majestic Mulch	Playground Surfacing	**Kool Playgrounds** 407-891-8017	5%	Included	YES	NO
Zeager Playground Surfacing	Woodcraft Surfacing	**Kool Playgrounds** 407-891-8017	5%	Included	YES	NO
Landscape Structures	Playground Equipment	**REP Services** 407-831-9658	2%	40%	YES	YES
Porter Corp	Pavilion/Gazebo Structures	**REP Services** 407-831-9658	2%	53%	YES	YES
Shade Systems Inc	Shade Structures	**REP Services** 407-831-9658	2%	60%	YES	YES
DuMor Site Furnishings	Various Site Amenities	**REP Services** 407-831-9658	2%	40%	YES	YES
Landscape Brands	Various Site Amenities	**REP Services** 407-831-9658	2%	40%	YES	YES

Manufacturer	Product	Distributor	Discount Allowed from MSRP	Installation	Catalog Provided	Current MSRP List Supplied
Sofsurfaces	Playground Surfacing	REP Services 407-831-9658	5%	33%	YES	YES
Forever Lawn	Artificial Grass	REP Services 407-831-9658	5%	Included	YES	YES
Robertson Industries	Playground Safety Surfacing	REP Services 407-831-9658	2%	Included	YES	YES
Irvine Wood Recovery	Wood Fiber Surfacing	REP Services 407-831-9658	5%	99%	YES	YES
Zeager	Loose Fill Wood Surfacing	REP Services 407-831-9658	5%	99%	YES	YES
BCI Burke LLC	Playground Equipment	Adv. Recreation 866-957-2355	5%	27%	YES	YES
Rainbow Turf Products	Playground Surfacing	Adv. Recreation 866-957-2355	5%	See Attachment A of proposal	YES	YES
Earthscapes Recycled Equip.	Playground Equipment	Adv. Recreation 866-957-2355	3%	29%	YES	YES
Sunports USA Shades	Shade Structures	Adv. Recreation 866-957-2355	5%	35%	YES	YES
Greenfield Sports	UNKNOWN	Adv. Recreation 866-957-2355	2%	Based Per Project	NO	NO
Raindrop Products	Interactive Water Play	Adv. Recreation 866-957-2355	3%	Based Per Project	YES	NO
Shade Systems	Shade Structures	Adv. Recreation 866-957-2355	5%	35%	YES	YES
Bison	Miscellaneous Sports Equip.	Adv. Recreation 866-957-2355	3%	35%	YES	NO
Superior Shade	Shade Structures	Adv. Recreation 866-957-2355	5%	35%	YES	NO
SK8 Parks Intl	Skate Boarding Parks	Adv. Recreation 866-957-2355	3%	15%	YES	NO

Manufacturer	Product	Distributor	Discount Allowed from MSRP	Installation	Catalog Provided	Current MSRP List Supplied
Geosculpts Monolithic	UNKNOWN	**Adv. Recreation** 866-957-2355	3%	26%	NO	NO
Dynamo	UNKNOWN	**Adv. Recreation** 866-957-2355	5%	35%	NO	NO
Sports Play	Playground Equipment	**Adv. Recreation** 866-957-2355	3%	31%	YES	NO
Cedar Forest Products	Wooden Pavilions/Structures	**Adv. Recreation** 866-957-2355	3%	39%	YES	YES
Litchfield Shelters	Pavilions and Structures	**Adv. Recreation** 866-957-2355	5%	37%	YES	YES
Ball Fabrics	Shade Structures	**Adv. Recreation** 866-957-2355	5%	35%	YES	YES
Kay Park	Various Park Amenities	**Adv. Recreation** 866-957-2355	2%	35%	YES	YES
Web Coat Inc.	Tables and Benches	**Adv. Recreation** 866-957-2355	2%	35%	YES	YES
Ultra Play/Ultra Coat	Various Park Amenities	**Adv. Recreation** 866-957-2355	2%	35%	YES	NO
RCP Shelters	Pavilions/Shelters	**Adv. Recreation** 866-957-2355	5%	37%	YES	YES
Soft Play Artificial Turf	Artificial Turf	**Adv. Recreation** 866-957-2355	UNKNOWN	UNKNOWN	UNKNOWN	UNKNOWN
Park Pets	Structures	**Adv. Recreation** 866-957-2355	2%	93% (1) 47% (2) 33% (3)	YES	YES
Air Shade America	Shade Structures	**Bliss Products** 1-800-248-2547	5%	Priced Per Job	YES	NO
Athletic Connection	Miscellaneous Sports Equipment	**Bliss Products** 1-800-248-2547	5%	25%	YES	YES
BRP	Park Benches and Amenities	**Bliss Products** 1-800-248-2547	8%	25%	YES	NO

Manufacturer	Product	Distributor	Discount Allowed from MSRP	Installation	Catalog Provided	Current MSRP List Supplied
Childforms	Small Scale Playground Equip.	**Bliss Products** 1-800-248-2547	10%	35%	YES	YES
Childsafe	Playground Surfacing	**Bliss Products** 1-800-248-2547	5%	Priced Per Job	YES	NO
Childworks	Small Scale Playground Equip.	**Bliss Products** 1-800-248-2547	5%	Priced Per Job	YES	NO
Com-Pac Filtration	Water Play Structures	**Bliss Products** 1-800-248-2547	5%	Priced Per Job	YES	NO
Dura Net	UNKNOWN	**Bliss Products** 1-800-248-2547	5%	Priced Per Job	NO	NO
Fibar	Wood Surfacing	**Bliss Products** 1-800-248-2547	10%	Priced Per Job	NO	NO
Forte	Playground Borders	**Bliss Products** 1-800-248-2547	5%	Priced Per Job	YES	YES
Gared Sports	Miscellaneous Park Equipment	**Bliss Products** 1-800-248-2547	10%	Priced Per Job	YES	NO
G T Grandstands	Bleachers	**Bliss Products** 1-800-248-2547	10%	Priced Per Job	YES	YES
Icon Shelters	Pavilions/Shelters	**Bliss Products** 1-800-248-2547	10%	35%	YES	NO
Jay Hawk Plastics	Miscellaneous Park Equipment	**Bliss Products** 1-800-248-2547	10%	Priced Per Job	YES	YES
Jay Pro	Miscellaneous Sports Equipment	**Bliss Products** 1-800-248-2547	10%	Priced Per Job	YES	NO
Ken Coat	Plastic Site Amenities	**Bliss Products** 1-800-248-2547	10%	Priced Per Job	YES	NO
KOMPAN	Playground Equipment	**Bliss Products** 1-800-248-2547	5%	35%	YES	YES
Murdock Fountains	Fountains	**Bliss Products** 1-800-248-2547	10%	Priced Per Job	NO	NO

Manufacturer	Product	Distributor	Discount Allowed from MSRP	Installation	Catalog Provided	Current MSRP List Supplied
Nova Sports U.S.A	UNKNOWN	**Bliss Products** 1-800-248-2547	5%	Priced Per Job	NO	NO
Outback Shelters	Shelters	**Bliss Products** 1-800-248-2547	5%	Priced Per Job	YES	YES
Play & Park Structures	Playground Equipment	**Bliss Products** 1-800-248-2547	10%	35%	YES	YES
Playsafer	Play Surfacing	**Bliss Products** 1-800-248-2547	5%	Priced Per Job	YES	YES
Pro Mats	Play Surfacing	**Bliss Products** 1-800-248-2547	5%	Priced Per Job	YES	NO
Rubber Wholesalers	UNKNOWN	**Bliss Products** 1-800-248-2547	5%	Priced Per Job	NO	NO
Shaw Industries	UNKNOWN	**Bliss Products** 1-800-248-2547	5%	Priced Per Job	NO	NO
Sof Surfaces	Playground Surfacing	**Bliss Products** 1-800-248-2547	5%	Priced Per Job	YES	NO
Spiral Court King	Basketball Goals	**Bliss Products** 1-800-248-2547	5%	Priced Per Job	YES	NO
Spohn Ranch/Tru Ride Skate Parks	Skate Parks	**Bliss Products** 1-800-248-2547	5%	Priced Per Job	YES	NO
Sportsplay	Miscellaneous Playground Equip	**Bliss Products** 1-800-248-2547	10%	35%	YES	YES
Terra Pad	Playground Surfacing	**Bliss Products** 1-800-248-2547	5%	Priced Per Job	YES	NO
Ultra Play/Ultra Coat	Park Furniture	**Bliss Products** 1-800-248-2547	10%	Priced Per Job	YES	YES
Waterworks	Interactive Water Parks	**Bliss Products** 1-800-248-2547	5%	Priced Per Job	YES	NO
Webcoat	Various Site Amenities	**Bliss Products** 1-800-248-2547	5%	Priced Per Job	YES	YES

Manufacturer	Product	Distributor	Discount Allowed from MSRP	Installation	Catalog Provided	Current MSRP List Supplied
Wood Mulch Products	Wood Mulch	**Bliss Products** 1-800-248-2547	10%	Priced Per Job	NO	NO
The Dog Pollution	UNKNOWN	**Bliss Products** 1-800-248-2547	5%	Priced Per Job	NO	NO
Playscape H 2 0	UNKNOWN	**Bliss Products** 1-800-248-2547	5%	Priced Per Job	NO	NO
Nicros Boulders	UNKNOWN	**Bliss Products** 1-800-248-2547	5%	Priced Per Job	NO	NO
Sand Lock Sandbox	UNKNOWN	**Bliss Products** 1-800-248-2547	5%	Priced Per Job	NO	NO
Musco Sports Lighting	Sports Lighting	**M. Gay Const.** 904-714-4001	Priced Per Project - Per Sport	Priced Per Project - Per Sport	YES	YES
Musco Sports Lighting	Sports Lighting	**Musco Sports** 800-756-1205	Priced Per Project - Per Sport	Priced Per Project - Per Sport	YES	YES

To: Honorable Mayor and Village Council

Date: August 30, 2013

From: Ron E. Williams, Village Manager

Re: Recommendation for Approval
Award of Bid No. 2013-PR-004

A RESOLUTION OF THE MAYOR AND VILLAGE COUNCIL OF THE VILLAGE OF PALMETTO BAY, FLORIDA, RELATING TO PARKS AND RECREATION; APPROVING THE VILLAGE MANAGER'S RECOMMENDATION OF H & J ASPHALT INC. AS THE MOST RESPONSIVE BIDDER FOR THE CORAL REEF PARK PARKING LOT RENOVATIONS PROJECT; AND, FURTHER AUTHORIZING THE VILLAGE MANAGER TO EXECUTE THE CONTRACT FOR SERVICES UNDER BID-2013-PR-004 TO H & J ASPHALT INC., FOR THE CORAL REEF PARK PARKING LOT RENOVATION PROJECT AT A COST OF $84,215.50; PROVIDING AN EFFECTIVE DATE.

BACKGROUND AND ANALYSIS:
Given continual deterioration, depressions, uplifting of asphalt due to tree roots and faded parking and traffic lines of the three (3) parking lots servicing Coral Reef Park, the refurbishing of these areas is a part of the approved Parks and Recreation Capital Improvement Program for FY 2012-13. Pursuant to receipt of bids received in response to the Invitation to Bid No. 2013-PR-004, an analysis was conducted by an evaluation committee, as appointed by the Village Manager.

H & J Asphalt, Inc. met all requirements contained in the Invitation to Bid No. 2013-PR-004. The evaluation committee unanimously concluded that H & J Asphalt, Inc. be recommended for the Village Manager's consideration in presenting an award of bid to the Village Council.

FISCAL IMPACT: Funding available as authorized in the FY 2012-2013 Annual Budget.

RECOMMENDATION: Approval.

RESOLUTION NO. _____

A RESOLUTION OF THE MAYOR AND VILLAGE COUNCIL OF THE VILLAGE OF PALMETTO BAY, FLORIDA, RELATING TO PARKS AND RECREATION; APPROVING THE VILLAGE MANAGER'S RECOMMENDATION OF H&J ASPHALT INC. AS THE MOST RESPONSIVE BIDDER FOR THE CORAL REEF PARK PARKING LOT RENOVATIONS PROJECT; AND, FURTHER AUTHORIZING THE VILLAGE MANAGER TO EXECUTE THE CONTRACT FOR SERVICES UNDER BID NO. 2013-PR-004 TO H&J ASPHALT INC., FOR THE CORAL REEF PARK PARKING LOT RENOVATIONS PROJECT AT A COST OF $84,215.50; PROVIDING AN EFFECTIVE DATE.

WHEREAS, in an effort to restore operational efficiency of the three (3) parking lots servicing Coral Reef Park and pursuant to the competitive bidding process, the Village issued the Invitation to Bid No. No. 2013-PR-004; and,

WHEREAS, following an analysis of all bids received by an evaluation committee as selected by the Village Manager, H&J Asphalt, Inc. met all bid requirements and was unanimously recommended as the lowest most responsive bidder with a low bid price of $84,315.50; and,

WHEREAS, capital dollars necessary for this expenditure is identified and approved in the Village's FY 2012-2013 Annual Capital Improvement Budget; and,

WHEREAS, the Mayor and Council are now being presented with the Village Manager's recommendation for approval of the award of the bid and approval of award of contract with H&J Asphalt, Inc. for specified services pursuant to the terms and conditions of the Invitation to Bid No. 2013-PR-004 at the lowest responsive bid price of $84,215.50.

NOW, THEREFORE, BE IT RESOLVED BY THE MAYOR AND VILLAGE COUNCIL OF THE VILLAGE OF PALMETTO BAY, FLORIDA, AS FOLLOWS:

Section 1. The Village Council hereby approves the recommendation of the Village Manager in recommending H&J Asphalt, Inc. as the lowest most responsive bidder pursuant to Invitation to Bid No. 2013-PR-004 at a cost of $84,215.50.

Section 2. The Village Manager is hereby authorized to enter into agreement with H&J Asphalt, Inc., pursuant to the agreed upon terms and conditions regarding specified parking lot refurbishing services at Coral Reef Park; and at a cost of $84,215.50.; as provided under the contract attached to this resolution as Exhibit 1.

Section 3. This resolution shall take effect immediately upon adoption.

PASSED AND ADOPTED this _____ day of September, 2013.

Attest: _____
Meighan J. Alexander
Village Clerk

_____
Shelley Stanczyk
Mayor

APPROVED AS TO FORM:

_____
Eve A. Boutsis
Village Attorney

FINAL VOTE AT ADOPTION:

Council Member Patrick Fiore _____

Council Member Tim Schaffer _____

Council Member Joan Lindsay _____

Vice-Mayor John Dubois _____

Mayor Shelley Stanczyk _____

CONSTRUCTION AGREEMENT BETWEEN
THE VILLAGE OF PALMETTO BAY AND
H & J ASPHALT, INC.

THIS AGREEMENT is executed and entered into on this _____ day of _____, 2013, between the Village of Palmetto Bay, Florida, a Florida municipal corporation, (hereinafter referred to as the "Village") and H & J Asphalt Inc., a Florida Corporation, licensed and authorized to do business in the State of Florida, (hereinafter referred to as the "Contractor"), whose place of business is 4310 NW 35th Avenue, Miami, Florida 33142.

WHEREAS, pursuant to a competitive bid and selection process consistent with section 287.055, Florida Statutes, the Village requested qualifications from qualified contractors and selected the Contractor to provide professional construction services at Coral Reef Park under Village of Palmetto Bay Bid No. 2013-PR-004; and,

WHEREAS, the purpose of this Agreement is to procure specified improvements to the Coral Reef Park Parking lots (three) for the Village of Palmetto Bay Park as further explained and detailed under Section 4 – Scope of Services and Compensation and Section 9 – Specifications; and,

WHEREAS, the project work includes pre-construction and construction services necessary to renovate/improve the three subject parking lots at Coral Reef Park including without limitation: removal of wheel stops; root cutting and/or removal in specified areas; re-establishing sub-base in areas of depression and/or pot-hole and patch per industry standards; application of tack coat bonding; resurface with one inch (1") S-111 hot mix Asphalt; striping of parking spaces, traffic markings, etc with Thermo paint; replace wheel stops; replace damaged wheel stops with new/secure.

WHEREAS, the Contractor is willing and able to perform such professional services for the Village within the basic terms and conditions set forth in this agreement ("Agreement"); and

NOW, THEREFORE, in consideration of the sum of $10.00, the mutual terms, conditions, promises, and covenants set forth below, and other good and valuable consideration, the receipt and sufficiency of which are hereby acknowledged, the parties hereby agree as follows:

GENERAL TERMS AND CONDITIONS

SECTION 1. WHEREAS CLAUSES. The above whereas clauses are incorporated and made part of this agreement.

SECTION 2.DEFINITIONS. Wherever used in this Agreement the following terms have the meanings indicated:

Addenda - Written or graphic instruments issued prior to the opening of Bids which modify, interpret, make additions, deletions, clarifications or revisions to the Contract Documents, including as to Drawings and Specifications.

Agreement (Or Contract Document) - The written contract between the Village and the Contractor covering the Work to be performed; when other documents are attached to the Agreement they become part of the contract, and specifically includes all the attachments to this Contract Documents. Cross reference with Contract Document definition below.

Application for Payment - The form furnished by the Architect which is to be used by the Contractor to request progress or final payment and which includes such supporting documentation as is required by the Contract Documents.

Bid - The offer(s) or proposal of the Bidder/Contractor submitted in response to this Invitation for Bid, on the prescribed form setting for the prices for the Work to be performed.

Bonds - Bid, Performance, and Payment Bonds and other instruments which protect against loss due to inability or refusal of the Contractor to perform its Contract.

Change Order - A document recommended by the Architect, which is signed by the Contractor and the Village and authorizes an addition, deletion, or revision in the Work, or an adjustment in the Contract Price or the

_____ Village
_____ Contractor

Contract Time, issued on or after the Effective Date of the Agreement as provided within this agreement under the relevant section.

Consultant - The Architect or Engineer of Record.

Contract Documents (Agreement) - The Notice Inviting Bids, Instructions to Bidders, Bid Forms (including the Bid, Bid Schedule(s), Information Required of Bidder, Bid Bond, and all required certificates and affidavits), Agreement, Performance Bond, Payment Bond, General Conditions, Technical Specifications, and all addenda, and change orders executed pursuant to the provisions of the Contract Documents.

Contract Price - The original amount established in the bid submittal and award by the Village, as may be amended by Change Order.

Contract Time - The original time between commencement and completion, including any milestone dates thereof, established in the contract, as may be amended by Change Order.

Contractor: The person, firm or corporation with whom the Village has executed the Agreement.

Day/Calendar Day - A calendar day of 24 hours measured from midnight to the next midnight.

Defective Work - Work that is unsatisfactory, faulty, or deficient; or that does not conform to the Contract Documents; or that does not meet the requirements of any inspection, reference standard, test, or approval referred to in the Contract Documents; or Work that has been damaged prior to the Architect's recommendation of final payment.

Delivery - Unless actual date of delivery is specified (or if specified delivery cannot be met), show the number of calendar days required to make delivery after receipt of purchase order, in space provided. Delivery time may become a basis for making an award. Delivery shall be within the normal working hours of the user, Monday through Friday, excluding holidays.

Anti-Discrimination - The Contractor certifies that he/she is in compliance with the non-discrimination clause contained in Section 202, Executive Order 11246, as amended by Executive Order 11375, relative to equal employment opportunity for all persons without regard to race, color, religion, sex or national origin.

Drawings - The drawings, plans, maps, profiles, diagrams, and other graphic representations which show the character, location, nature, extent, and scope of the Work and which have been prepared by the Architect and are referred to in the Contract Documents. Shop Drawings are not Drawings as so defined.

Effective Date of the Agreement - The date indicated in the Agreement on which it was executed, but if no such date is indicated it means the date on which the Agreement is signed and delivered by the last of the two parties to sign and deliver.

Architect - The Architect or Engineer which prepared the Contract Documents, if applicable; and which acts as the Village's agent in administration of the Contract.

Field Order - A written order which orders minor changes in the work but which does not involve a change in the Contract Price or Contract Time.

Force Majeure - An act of God, including sink holes, hurricanes, tornadoes, landslides, lightning, earthquakes, fire, flood, explosion, sabotage or similar occurrence, acts of a public enemy, war, blockage or insurrection, riot, civil disturbance, or act of terrorism.

Furnish or Supply – To supply and deliver, unload, inspect for damage.

_____ Village

_____ Contractor

Install – To unpack, assemble, erect, apply, place, finish, cure, protect, clean and ready for use.

Laws and Regulations; Laws or Regulations - Laws, rules, regulations, ordinances, codes, and/or orders promulgated by a lawfully constituted body authorized to issue such Laws and Regulations.

Notice of Intent to Award - The written notice by the Village to the apparent successful Bidder (Contractor) stating that upon compliance by the apparent successful bidder with the conditions precedent enumerated therein within the time specified, the Village will execute and deliver the Agreement to him.

Notice to Proceed - The written notice issued by the Village to the Contractor authorizing the Contractor to proceed with the Work and establishing the date of commencement of the Contract Time.

Partial Utilization - Placing a portion of the Work in service for the purpose for which it is intended (or a related purpose) before reaching Substantial Completion of the Work.

Products – Means new material, machinery, components, equipment, fixtures, and systems forming the Work, but does not include machinery and equipment used for preparation, fabrication, conveying and erection of the Work. Products may also include existing materials or components required for reuse.

Project - All matters and things whether completed or partially completed, and includes all other labor, materials, equipment and services provided or to be provided by the Successful Bidder in accordance with the Contract.

Provide – To furnish or supply, plus install.

Resident Project Representative - The authorized representative of the Architect, Engineer or Village Building Official who is assigned to the site or any part thereof.

Shop Drawings - All drawings, diagrams, illustrations, schedules and other data which are specifically prepared by or for the Contractor and submitted by the Contractor to illustrate some portion of Work and all illustrations, brochures, standard schedules, performance charts, instructions, and diagrams to illustrate material or equipment for some portion of the Work.

Specifications - (Same definition as for Technical Specifications hereinafter).

Subcontractor - An individual, firm, or corporation having a direct contract with the Contractor or with any other Subcontractor for the performance of a part of the Work at the site.

Substantial Completion - Refers to the date certified by the Village Building Official, Architect or Engineer to when all conditions and requirements of permits and regulatory agencies have been satisfied, and when the Work has progressed to the point where, in the opinion of the Village Building Official, Architect or Engineer, as evidenced by the Certificate of Substantial Completion/Notice of Completion as applicable, it is sufficiently complete, in accordance with the Contract Documents, so that the Work is available for beneficial occupancy and can be utilized for the purposes for which it is intended; or if there be no such certificate issued when final payment is due in accordance with Section 15, et seq. A Temporary Certificate of Occupancy or Certificate of Occupancy must be issued for Substantial Completion to be achieved, however, the issuance of a Temporary Certificate of Occupancy or Certificate of Occupancy or the date thereof are not to be determinative of the achievement or date of Substantial Completion. The terms "substantially complete" and "substantially completed" can be used interchangeably as applied to any Work refer to as "substantial completion" thereof. At Substantial Completion, a Final Punch List will be prepared and provided to the Contractor. The Final Punch List will contain a listing of all known remaining incomplete items of the Work, but is not to be considered by the Contractor as a waiver by the Village of the Contractor's obligation to complete all the Work in complete compliance with the Contract

_____ Village

_____ Contractor

Documents. If the Project is behind schedule, the Village may direct the Contractor to expedite the Work at no additional cost to the Village by whatever means the Contractor may use, including, without limitation, increasing manpower or working overtime to bring the Work back within the currently submitted and approved Progress Schedule.

Supplier - A manufacturer, fabricator, supplier, distributor, material man, or vendor.

Technical Specifications - Those portions of the Contract Documents consisting of this Agreement and written technical descriptions of products and execution of the Work as supplied in the bid documents by the Village.

Underground Utilities - All pipelines, conduits, ducts, cables, wires, manholes, vaults, tanks, tunnels, or other such facilities or attachments, and any encasements containing such facilities which have been installed underground to furnish any of the following services or materials: water, sewage and drainage removal, electricity, gases, steam, liquid petroleum products, telephone or other communications, cable television, traffic, or other control systems.

Village: Village of Palmetto Bay, 9705 East Hibiscus Street, Palmetto Bay, Florida 33157.

Weather Delays - Work stoppage caused by abnormal inclement weather, where abnormal duration and frequency of rain as compared with the Weather Bureau data and supported by project logs, has caused the contractor to suspend critical path activities during the exceptional adverse weather event for more than fifty percent (50%) of the work period of the day due to exceptionally adverse weather. Weather delay claim can be made for work day only. No time extension will be allowed for weekend rains.

Abnormal weather conditions not reasonably anticipated shall mean weather conditions which prevent work on the Project and which have a direct effect on the Contractor's predefined critical work sequence. Contractor's schedule shall take into consideration normal seasonal weather conditions number of precipitation-days per months (as defined by the National Weather Service 30 year average) along with muddy site days directly related to the precipitation days indicated.

Work: Any and all obligations, duties and responsibilities necessary to the successful completion of the assigned to or undertaken by Contractor under the Contract Documents, including all labor, materials, equipment and other incidentals, and the furnishing thereof.

SECTION 3. PRELIMINARY MATTERS

3.1 Delivery Of Bonds/Insurance Certificates. When the Contractor delivers the signed Agreements to the Village, the Contractor shall also deliver to the Village such Bonds and Insurance Policies and Certificates as the Contractor may be required to furnish in accordance with the Contract Documents.

3.2 Copies Of Documents. The Village shall furnish to the Contractor the required number of copies of the Contract Documents specified herein.

3.3 Commencement Of Contract Time; Notice To Proceed. The Contract Time will start to run on the commencement date stated in the Notice to Proceed.

3.4 Starting The Project. The Contractor shall begin to perform the Work within 10 days after the commencement date stated in the Notice to Proceed, but no Work shall be done at the site prior to said commencement date.

_____ Village

_____ Contractor

SECTION 4.SCOPE OF SERVICES AND COMPENSATION

4.1 Prices Shall Be Fixed And Firm For Awarded Contract. The prices quoted by the Contractor on the attached executed Bid Form, attached as Exhibit 4 to this agreement shall remain fixed and firm during the term of this contract; provided however, that the Contractor may offer incentive discounts from this fixed price to the Village at any time during the contractual term. The work includes, but may not be limited to, the furnishing of all labor, materials, tools, equipment, machinery and services necessary to complete renovations in accordance with specifications described herein and as requested by the Village, specifically engineered for the Coral Reef Park Parking Lot(s) Improvement project; located at 7895 SW 152 Street, Palmetto Bay, Florida 33157; and further detailed under Section 4.0 of the invitation for bid. The scope and compensation are outlined in the attached bid response/project manual under Village of Palmetto Bay Bid No.: 2013-PR-004, for he Coral Reef Park Pedestrian Bridge Renovation Project, which are attached as Exhibit __.

4.2 Contract Documents: Intent Amending, Reuse

a. The Contract Documents comprise the entire agreement between the Village and the Contractor concerning the Work. The Contract Documents are complementary; what is called for by one is as binding as if called for by all. The Contract Documents will be construed in accordance with the law of the place of the Project.

b. It is the intent of the Contract Documents to describe the Work, functionally complete, to be constructed in accordance with the Contract Documents. Any Work, materials, or equipment that may reasonably be inferred from the Contract Documents as being required to produce the intended result shall be supplied whether or not specifically called for. When words which have a well-known technical or trade meaning are used to describe Work, materials, or equipment such words shall be interpreted in accordance with that meaning. Reference to standard specifications, manuals, or codes of any technical society, organization, or association, or to the Laws or Regulations of any governmental authority, whether such reference be specific or by implication, shall mean the latest standard specification, manual, code, or Laws or Regulations in effect at the time of opening of Bids, except as may be otherwise specifically stated. However, no provision of any referenced standard specification, manual, or code (whether or not specifically incorporated by reference in the Contract Documents) shall be effective to change the duties and responsibilities of the Village, the Contractor, the Architect, the Engineer or any of their Consultants, agents, or employees from those set forth in the Contract Documents.

c. If, during the performance of the Work, the Contractor finds a conflict, error, or discrepancy in the Contract Documents, the Contractor shall so report to the Village, Architect and Engineer in writing at once and before proceeding with the Work affected thereby, shall obtain a written interpretation, clarification, or correction from the Village, Architect and Engineer.

d. Order Of Precedence Of Contract Documents. In resolving conflicts resulting from conflicts, errors, or discrepancies in any of the Contract Documents, the order of precedence shall be as follows:

1. Change orders
2. Addenda
3. Agreement - Contract
4. Contractor's Bid (Bid Form Executed) - Exhibit 1.
5. Technical Specifications Exhibit 2
6 Notice Inviting Bids – Exhibit 3
7. Instructions to Bidders – Exhibit 4
8. Representations and Certifications and other Statements of bidders – Exhibit 5

e. With reference to the Drawings the order of precedence is as follows:

1. Figures govern over scaled dimensions
2. Detail drawings govern over general drawings
3. Addenda/change order drawings govern over Contract Drawings
4. Contract Drawings govern over standard drawings

f. Amending And Supplementing Contract Documents. The Contract Documents may be amended to provide for additions, deletions, and revisions in the Work or to modify the terms and conditions thereof by a Change Order as provided herein.

g. Reuse Of Documents. Neither the Contractor, nor any Subcontractor or Supplier, nor any other person or organization performing any of the Work under a contract with the Village shall have or acquire any title to or ownership rights in any of the Drawings, Technical Specifications, or other documents used on the Work, and they shall not reuse any of them on the extensions of the Project or any other project without written consent.

4.3 The Contractor shall furnish all labor, materials, equipment, machinery, tools, apparatus, and transportation and perform all of the work shown in Exhibits 5 and shall do everything required by this contract and any other contract documents. The Contractor is familiar with the site and the proposed scope of work.

4.4 The Village shall pay the Contractor for the faithful performance of the contract, in lawful money of the United States, and subject to addition and deductions as provided in the contract documents, as follows:

4.5 Based upon the price reflected in Exhibit 1 submitted to the Village by the Contractor, a copy of said Proposal being part of these contract documents, the aggregate amount of this contract is the lump sum of $_____.

4.6 The price provided in the bid response should include all deductions for trade discounts and the bid response found at Exhibit 1 should include firm net pricing, per each category. The bid response is required to include both unit price and extended total price, when requested. Prices must be stated in units of quantity specified in the bidding specifications. In case of discrepancy in computing the amount of the bid, the unit price quoted will govern. All prices must be F.O.B. destination, freight prepaid Palmetto Bay, Florida with delivery to the location specified at the time of order. Discounts for prompt payment: Award, if made, will be in accordance with terms and conditions stated herein.

4.7 Taxes. The Village of Palmetto Bay is exempt from all Federal Excise and State taxes. The applicable tax exemption number shall be reflected on any Purchase Order. The Contractor shall pay all sales, consumer, use, and other similar taxes required to be paid by the Contractor in accordance with the Laws and Regulations of the place of the Project which are applicable during the performance of the Work.

4.8 Equipment. All equipment shall be maintained in an efficient and safe operating condition while performing work under the contract. Equipment shall have all proper safety devices required by law, properly maintained and in use at all times. If the equipment does not contain proper safety devices and/or is being operated in an unsafe manner, the Village may direct the Contractor to remove such equipment and/or the operator until the deficiency is corrected to the satisfaction of the Village of Palmetto Bay. The Contractor shall be solely responsible and liable for injury to persons, and/or property damage caused by operation of the equipment. Equipment may be inspected and evaluated by the Village of Palmetto Bay at any time.

4.9 Storage And Mobilization Facility.If necessary, the Contractor must provide an on-site storage area with perimeter chain-link fencing and/or container for temporary storage of equipment, supplies and materials as a part of the renovation/improvement process; to be located in the Coral Reef Park and in an area pre-approved by the Village. No on-site storage area will be provided by the Village.

_____ Village

_____ Contractor

4.10 Special Contract Requirements. The Contractor's President or Chief Operating Officer must be available to attend meetings with the Village upon request. In the event of a force majeure, or other incident, the Contractor, must initiate appropriate measures to ensure protection of any work-in-progress prior to final inspections and turn over to the Village. All of the Contractor's employees are required to wear a uniform that identifies the Contractor's company name at all times. No fuels, oils, solvents, or similar materials are to be disposed of in any catch basins. The contractor must closely adhere to local, state, and Federal Environmental Protection Agency requirements, and is responsible for all non-compliance penalties.

4.11 The Village shall not be liable to pay, and shall not pay, charges for extra work, delay charges, or additional work, unless the Village's authorized representative and contract officer, Ron E. Williams, Village Manager, specifically authorizes the extra or additional work, in a written task order before the commencement of the work as provided for under this agreement. The contract officer with the authority to issue change orders is the Village Manager.

4.12 Proration. Should services not be fully rendered or the contract terminated for any reason, payment to Contractor will be prorated based upon actual services rendered.

4.13 Contractor shall procure all necessary permits to complete the services contemplated in Exhibit 5, and shall ensure that all services comply with state and local laws [Florida Building Code, County Code, and Village Code, as applicable]. Contractor shall be responsible for submitting, revising and obtaining final permit approval for all services provided.

a. Unless otherwise provided in the Conditions of this Agreement or Summary of Work, the Contractor shall obtain all construction permits and licenses from the agencies having jurisdiction, including the furnishing of insurance and bonds if required by such agencies. The Village requires insurance and bonds. The enforcement of such requirements under this Contract shall not be made the basis for claims for additional compensation. The Village shall assist the Contractor, when necessary, in obtaining such permits and licenses. The Village shall pay at cost and directly all governmental permit charges necessary for the completion of the Work, which were applicable at the time of the opening of the underlying successful bid proposal. The Village shall pay at cost all charges of utility owners for connections to the Work. If Contractor fails any regulatory inspections, Contractor shall pay for the re-inspection fees necessary for the completion of the Work.

Contractor shall not commence any work without the appropriate permit. Copy of the respective permits shall be submitted to the Village, Architect and Engineer prior to commencement of work.

b. The Contractor shall pay all license fees and royalties and assume all costs incident to the use in the performance of the Work or the incorporation in the Work of any invention, design, process, product, or device which is the subject of patent rights or copyrights held by others. If a particular invention, design, process, product, or device is specified in the Contract Documents for use in the performance of the Work and if to the actual knowledge of the Village, the Architect or Engineer, its use is subject to patent rights or copyrights calling for the payment of any license fee or royalty to others, the existence of such rights shall be disclosed by the Village in the Contract Documents. The Contractor shall indemnify, defend and hold harmless the Village, the Architect and Engineer, and anyone directly or indirectly employed by either of them from and against all claims, damages, losses, and expenses (including attorneys' fees and court costs) arising out of any infringement of patent rights or copyrights incident to the use in the performance of the Work or resulting from the incorporation in the Work of any invention, design, process, product, or device not specified in the Contract Documents, and shall defend all such claims in connection with any alleged infringement of such rights.

_____ Village

_____ Contractor

4.14 Contractor shall promptly advise the Village of any additional work or modifications in scope of work as provided in this agreement. If the additional work is required due to circumstances beyond Contractor's control (i.e. pre-existing conditions) then the Village shall evaluate the request pursuant to the provisions of this agreement. However, if the additional work is due to Contractor's failure to contemplate Florida or local law requirements, Contractor shall be responsible for completing any such work without additional compensation.

4.15 The Contractor warrants that the product(s) supplied to the Village shall conform in all respects to the standards set forth in the Occupational Safety and Health Act of 1970, as amended, and the failure to comply with this condition will be considered as a breach of contract. Any fines levied because of inadequacies to comply with these requirements shall be borne solely be the Contractor responsible for same.

4.16 Laws And Regulations. Contractor shall be familiar with and abide by all applicable OSHA standards and regulations, including those pertaining to Lead Based Paint, and all work must be performed using lead safe work practices. The Contractor shall observe and comply with all federal, state, and local laws, ordinances, codes, orders, and regulations which in any manner affect those engaged or employed on the Work, the materials used in the Work, or the conduct of the Work. If any discrepancy or inconsistency should be discovered in this Contract in relation to any such law, ordinance, code, order, or regulation, the Contractor shall report the same in writing to the Village, the Architect and Engineer. The Contractor shall indemnify, defend, and hold harmless the Village, the Architect, and Engineer, and their officers, agents, and employees against all claims or liability arising from violation of any such law, ordinance, code, order, or regulation, whether by Contractor or by its employees or subcontractors. Any particular law or regulation specified or referred to elsewhere in the Contract Documents shall not in any way limit the obligation of the Contractor to comply with all other provisions of federal, state, and local laws and regulations. Where an individual State act on occupational safety and health standards has been approved by Federal authority, then the provisions of said State act shall control.

4.17 Where Contractors are required to enter or go onto Village of Palmetto Bay property to deliver materials or perform work or services as a result of the bid award and Contract, the Contractor will assume the full duty, obligation and expense of obtaining all necessary licenses and insurance and assure all work complies with all applicable Miami-Dade County, Federal, Village of Palmetto Bay Building Code, and industry standards for the specified construction services. The Contractor shall be liable for any damages or loss to the Village occasioned by negligence of the Contractor (or agent) or any person the Contractor has designed in the completion of the contract as a result of his or her being awarded the Contract. Contractor shall take care to avoid damage to Village's property, and the property of Village's tenants, vendors and patrons.

4.18 Hazardous materials. Contractor shall not store fuel (other than fuel in the gas tanks of parked vehicles), or hazardous, solid waste or other toxic materials at the premises. Used in this agreement, the term "hazardous material" means any hazardous or toxic substance, material waste, which is or becomes regulated by any local governmental authority in the state of Florida or the United States. Contractor agrees to indemnify and hold the Village harmless from any and all claims, demands, liabilities, losses, damages or expenses arising as a result of Contractor's breach or failure to perform any of the terms that are contained in this Section. Contractor further covenants and agrees with the Village that it will maintain the premises in a good condition and that it will not commit, or suffer to be committed, any waste of or on the premises. Contractor shall not use the premises for any unlawful purpose and shall comply with all laws and permitting requirements applicable now, or in the future, to the permitted use. Contractor shall not permit any offensive, or dangerous activity, nor any nuisance or other conduct at the premises in violation of the public policy of the Village, county or state. Contractor has agreed to maintain the premises in compliance with the provisions of this Section

4.19 Contractor shall ensure that for the length of this Contract that the sidewalk and curb are not materially deteriorated due to Contractor's use of the site (heavy equipment entering and exiting the premises). The Village shall periodically inspect the premises (defined areas of work) to advise of any maintenance issues that require attention during the leasehold. The Village representative shall communicate with Contractor within 24 hours of inspection, in order to advise Contractor of any necessary and/or immediate maintenance needs for the site. Of particular importance in maintaining the site is Contractor's minimal disturbance to the neighbors, and enhanced supervision of the site. If fill or other construction materials are placed on site, Contractor shall take all reasonable

_____ Village

_____ Contractor

efforts to minimize the spread of dust through the neighborhood by, *inter alia,* placing a tarp over the fill materials. Fill materials includes but is not limited to sand, soil, and cement. No materials or supplies may be left outdoors or visible other than within approved storage areas, and that requirement must be strictly complied with.

4.20 Interest. The Village shall make payment to Contractor within 30 days of receipt of the original written invoice, provided the Contractor has provided and sufficient backup documentation and the Village has accepted the work done by the Contractor. Interest shall accrue on unpaid invoices as provided by Florida Statutes Section 218.74.

4.21 Contractor shall not be entitled to any carrying charges or finance fees due to late payment by the Village.

4.22 Right to Withhold. If work under this Contract is not performed in accordance with the terms hereof, Village has the right to withhold any payment due to the Contractor, of any sums as the Village may deem ample to protect it against loss, or to ensure payment of claims arising there from, and, at its option, Village may apply such sums in such manner as Village may deem proper to secure itself or to satisfy such claims. The Village will provide Contractor with 10 days prior written notice in the event that it elects to exercise its right to withhold under this section.

4.23 The Contractor, subcontractors, suppliers and laborers ("subcontractors") are prohibited from placing a lien on Village's property. Contractor shall execute a similar Contract requirement with subcontractors confirming that subcontractors are prohibited from placing liens on Village's property. Further, both Contractor and subcontractor warrant not to file or record liens or notices of liens against Village property.

SECTION 5. COMMENCEMENT AND COMPLETION OF WORK. The Contractor shall commence work of the date established in the Notice to Proceed. The Contractor shall prosecute the work with faithfulness and diligence and shall complete the work not later than the required sixty (60) day time limitation .

SECTION 6. CONTRACTOR'S ACCEPTANCE OF CONDITIONS

6.1 The Contractor hereby agrees that he/she has carefully examined the sites for the work to be performed and has fully satisfied himself/herself that such sites are correct and suitable ones for the work to be performed and he/she assumes full responsibility therefore. The provisions of this agreement shall control any inconsistent provisions contained in the specifications. All Drawings, Specifications, and agreement items contained in this Project Manuel have been read and carefully considered by the Contractor, who understands the same and agrees to their sufficiency for the work to be done. It is expressly agreed that under no circumstances, conditions, or situations shall this agreement be more strongly construed against the Village than against the Contractor and his/his Surety.

6.2 Any ambiguity or uncertainty in the Specifications, Drawings or Project Manuel shall be interpreted and construed by the Village's Engineer and his/her decision shall be final and binding upon all parties.

6.3 It is distinctly understood and agreed that the passing, approval and/or acceptance of any part of the work material by the Village, its Architect and its Engineer, or by any agent or representative as in compliance with the terms of this agreement and/or of the Project Manual covering said work, shall not operate as a waiver by the Village of strict compliance with the terms of this agreement, and/or the Project Manual covering said work; and the Village may require the Contractor and/or his/her insurer to repair, replace, restore and/or make to comply strictly and in all things with this agreement and the Project Manual any and all of said work and/or services which within a period of one year from and after the date of the padding, approval, and/or acceptance of any such work or services, are found to be defective or to fail in any way to comply with the Drawings and Specifications. This provision shall not apply to materials or equipment normally expected to deteriorate or wear out and become subject to normal repair and replacement before their condition is discovered. The Contractor shall not be required to do normal maintenance work under the guarantee provisions. Failure on the part of the Contractor and/or his/her insurer, immediately after Notice to either, to repair or replace any such defective materials and workmanship shall entitle the Village, if it sees fit, to replace or repair the same and recover the reasonable cost of such replacement and/or repair from the Contractor and/or his insurer, who shall in any event be jointly and severally liable to the Village for

all damage, loss, and expense caused to the Village by reason of the Contractor's breach of this agreement and/or his/her failure to comply strictly and in all things with this agreement and with the Drawings and Specifications.

6.4 If the Village exercises the right, in writing, to modify special conditions, the Contractor shall update and submit any legal documents required during the initial Solicitation by no later than sixty (60) calendar days prior to the commencement of the option period. If the updated documents are not submitted by the Contractor in complete form within the time specified, the Village may rescind its option, declares the Contractor to be in default of its contractual obligations and award to the next lowest and responsive bidder under the Bid 2013-PR-004 or seek a new Bid Solicitation. The Village may, at its sole option, seek monetary restitution from the Contractor as a result of damages or excess cost sustained and/or may prohibit the Contractor from submitting for future Village Bids for a period of one (1) year.

6.5 Substitutions The Village of Palmetto Bay, Florida will not accept substitute shipments of any kind, unless approved in advance by the Village Manager or his designee. Contractor is expected to furnish the brand quoted in their bid response, once awarded. Any unapproved substitute shipments will be returned at the Contractor's expense.

6.6 Preliminary Matters

a. Starting The Project. The Contractor shall begin to perform the Work within 10 days after the Commencement Date stated in the Notice to Proceed, but no Work shall be done at the site prior to said Commencement Date.

b. Before Starting Construction – Rehabilitation. Before undertaking each part of the Work, the Contractor shall carefully study and compare the Contract Documents and check and verify pertinent figures shown thereon and all applicable field measurements. The Contractor shall promptly report in writing to the Village, the Architect and Engineer any conflict, error, or discrepancy which the Contractor may discover and shall obtain a written interpretation or clarification from the Village, Architect and Engineer before proceeding with any Work affected thereby. The Contractor shall submit to the Village, the Architect and Engineer for review those documents called for under the bid and this Contract.

c. Preconstruction – Pre-Rehabilitation Conference. A preconstruction conference attended by the Contractor, the Village, its Architect and Engineer and others as appropriate will be held to discuss the Work in accordance with the applicable procedures specified in this Agreement.

d. Finalizing Schedules. At least seven (7) days before the first Pre-Construction/Pre-Rehabilitation Meeting, a conference attended by the Contractor, the Village, the Architect and Engineer, and others as appropriate, the Contractor will submit the following documents, if required, for the Architect's review: Construction Schedule, Schedule of Values, MOT Plan (if applicable), Staging Plan, Mobilization Plan, submitted in accordance with the General Requirements.

SECTION 7. GENERAL CONDITIONS

7.1 Certificates Of Insurance.

After award, the Village shall immediately require that the Contractor provide the Village with the Certificate of Insurance. The Contractor shall furnish certificates of insurance to the Village prior to the commencement of operations. The certificates shall clearly indicate that the Contractor has obtained insurance in the type, amount, and classification as required for strict compliance with this Section and that no reduction in limits by endorsement during the policy term, or cancellation of this insurance shall be effective without 30 days prior written notice to the Village. The Contractor shall be required to comply with the following conditions and provide the insurance indicated below:

The Village shall not be held liable or responsible for any claims which may result from acts, errors or omissions of the Contractor or its Subcontractors, suppliers or laborers. In reviewing, approving or rejecting any submissions or acts of the Contractor, the Village in no way assumes responsibility or liability for the acts, errors or omissions of the Contractor or Subcontractors.

The Contractor shall not commence work under this Contract until it has obtained all insurance required by the Village. The Contractor shall defend, indemnify and hold the Village harmless from any and all claims, liability, losses, expenses and causes of action arising solely out of a negligent act, error, or omission or misconduct of the Contractor, or the Contractor's Subcontractors, suppliers and laborers incident to the performance of the Contractor's services under this Contract. The Contractor shall pay all claims, losses, fines, penalties, costs and expenses of any nature whatsoever resulting from its intentional misconduct or negligence.

The Contractor shall maintain during the term of this Contract the following insurance:

a. Comprehensive general liability insurance with broad form endorsement, including automobile liability, completed operations and products liability, contractual liability, severability of interest with cross liability provision, and personal injury and property damage liability with limits of $1,000,000 combined single limit per occurrence for bodily injury and property damage. The policy or policies shall name Village as additional insured and shall reflect the hold harmless provision contained herein.

b. Workers' Compensation Insurance shall be maintained during the life of the construction services contract and until such time the Village accepts all specified work as completed, in compliance with Chapter 440, Florida Statutes/statutory limits for all employees. The following must be maintained"

* Worker's Compensation Statutory
* Employer's Liability $100,000 each accident
  $500,000 Disease –policy limit
  $100,000 Disease-employee

c. Comprehensive Automobile and Vehicle Liability Insurance. This insurance shall be written in a comprehensive form and shall protect the bidder and the Village against claims for injuries to members of the public and/or damages to property of others arising from the Contractor's use of motor vehicles or any other equipment and shall cover operation with respect to on-site and offsite operations and insurance coverage shall extend to any motor vehicles or other equipment irrespective of whether the same is owned, non-owned or hired. The limit of liability shall not be less than $1,000,000 per occurrence, combined single limit for bodily injury liability and property damage liability. Coverage must be afforded on a form no more restrictive than the latest edition of the Business Automobile Liability Policy, without restrictive endorsement, as filed by the Insurance Service Office.

d. Contractor shall furnish to the Finance Director, Village of Palmetto Bay, 9705 East Hibiscus Street, Palmetto Bay, Florida 33157, certificate(s) of insurance which indicate that insurance coverage has been obtained from an insurance company authorized to do business in the State of Florida or otherwise secured in a manner satisfactory to the City, for those coverage types and amounts listed in Section 3, "Scope of Work" and Section 4 "Specifications", in an amount equal to 100% of the requirements and shall be presented to the Village prior to issuance of any Contract(s) or Award(s) Document(s). The Village of Palmetto Bay shall be named as "additional insured" with respect to this coverage.

e. The policies shall contain waiver of subrogation against the Village where applicable and shall expressly provide that the policy or policies are primary over any other insurance that the Village may have. The Village reserves the right to request a copy of the required policies for review. All policies shall contain a "severability of interest" or "cross liability" clause without obligation for premium payment of the Village.

f. All of the insurance is to be placed with Best rated A-8 or better insurance companies qualified to do business under the laws of the State of Florida. All deductibles or self-insured retentions must be declared to

and be approved by the Village Manager. The bidder shall be responsible for the payment of any deductible or self-insured retentions in the event of any claim.

7.2 Assignment. The Contractor shall not assign, transfer, convey, sublet or otherwise dispose of this Contract, including any or all of its right, title or interest therein, or his or its power to execute such Contract to any person, company or corporation without prior written consent of the Village. The Contractor shall not assign, transfer or pledge any interest in this Contract without the prior written consent of the Village; provided, however, that claims for money by the Contractor from the Village under this Contract may be assigned, transferred or pledged to a bank, trust company, or other financial institution without the Village's approval. Written notice of any assignment, transfer or pledge of funds shall be furnished within 10 days by the Contractor to the Village. None of the work or services under this Contract shall be subcontracted unless Contractor obtains prior written consent from the Village. Approved subcontractors shall be subject to each provision of this Contract and Contractor shall be responsible and indemnify the Village for all subcontractors' acts, errors or omissions.

7.3 Sunshine Law. As a political subdivision, the Village of Palmetto Bay is subject to the Florida Sunshine Act and Public Records Law. By submitting a Bid and executing a contract with the Village, Contractor acknowledges that the materials submitted are open to public inspection upon proper request. Contractor should take special note of this as it relates to proprietary information that might be included in its documentation provided to the Village.

7.4 Business Entity Disclosure Statement. Contractor and all subcontractors shall comply with the Conflict of Interest and Code of Ethics Ordinances of the Village of Palmetto Bay and Miami-Dade County, particularly Section 2-11.1(c), Miami Dade County Code.

7.5 Force Majeure. The performance of any act by the Village or Contractor hereunder may be delayed or suspended at any time while, but only so long as, either party is hindered in or prevented from performance by acts of God, the elements, war, rebellion, strikes, lockouts or any cause beyond the reasonable control of such party, provided however, the Village shall have the right to provide substitute service from third parties or Village forces and in such event the Village shall withhold payment due Contractor for such period of time. If the condition of force majeure exceeds a period of 14 days the Village may, at its option and discretion, cancel or renegotiate this Contract.

7.6 Waiver Of Jury Trial. The Village and the Contractor knowingly, irrevocably voluntarily and intentionally waive any right either may have to a trial by jury in State or Federal Court proceedings in respect to any action, proceeding, lawsuit or counterclaim based upon the Contract Documents or the performance of the Work there under.

7.7 Eligibility. All agents, employees and subcontractors of the bidder retained to perform services pursuant to this Agreement shall comply with all laws of the United States concerning work eligibility and comply with the Shannon Melendi Act, as adopted by the Village.

7.8 No Collusion. Attached to the Contract documents is the executed Non-Collusion Affidavit. Contractor's failure to execute the affidavit shall result in disqualification of the Contractor and termination of this Agreement.

7.9 Withdrawal Or Revision Of Bid Prior To And After Opening. Contractor is precluded from withdrawing its bid within 120 calendar days after the bid opening date.

7.10 Contractor shall not cause any mechanics' liens or any other encumbrances to affect the premises. At Village's option, relevant provisions of Chapter 713, Florida Statutes, shall be complied with by Contractor.

7.11 Workmanship of work performed will be inspected and approved by the Village Manager or his designee.

7.12 Indemnification. To the fullest extent permitted by Laws and Regulations, the Contractor shall indemnify, defend, and hold harmless the Village; the Consultant; and their officers, directors, agents, and employees, against and from all claims and liability arising under, by reason of or incidentally to the Contract or any performance of the Work, but not from the sole negligence or willful misconduct of the Village and/or the Consultant. Such indemnification by the Contractor shall include but not be limited to the following:

_____ Village

_____ Contractor

a. Liability or claims resulting directly or indirectly from the negligence or carelessness of the Contractor, its employees, or agents in the performance of the Work, or in guarding or maintaining the same, or from any improper materials, implements, or appliances used in its construction, or by or on account of any act or omission of the Contractor, its employees, or agents;

b. Liability or claims arising directly or indirectly from bodily injury, occupational sickness or disease, or death of the Contractor's or Subcontractor's own employees engaged in the Work resulting in actions brought by or on behalf of such employees against the Village and/or the Consultant;

c. Liability or claims arising directly or indirectly from or based on the violation of any law, ordinance, regulation, order, or decree, whether by the Contractor, its employees, or agents;

d. Liability or claims arising directly or indirectly from the use or manufacture by the Contractor, its employees, or agents in the performance of this Contract of any copyrighted or uncopyrighted composition, secret process, patented or unpatented invention, article, or appliance, unless otherwise specifically stipulated in this Contract;
e. Liability or claims arising directly or indirectly from the breach of any warranties, whether express or implied, made to the Village or any other parties by the Contractor, its employees, or agents;

f. Liabilities or claims arising directly or indirectly from the willful misconduct of the Contractor, its employees, or agents; and,

g. Liabilities or claims arising directly or indirectly from any breach of the obligations assumed under the Contract by the Contractor.

7.12.1 The Contractor shall reimburse the Village, and the Consultant for all costs and expenses, (including but not limited to fees and charges of Architect, Engineers, attorneys, and other professionals, and court costs) incurred by said Village, and the Consultant in enforcing the provisions of this Section.

7.12.2 The indemnification obligation under this section shall not be limited in any way by any limitation of the amount or type of damages, compensation, or benefits payable by or for the Contractor or any such subcontractor or other person or organization under workers' compensation acts, disability benefit acts, or other employee benefit acts. The Village shall not be held liable or responsible for any claims which may result from acts, errors or omissions of the Contractor or its subcontractors, suppliers or laborers. In reviewing, approving or rejecting any submissions or acts of the Contractor, the Village in no way assumes responsibility or liability for the acts, errors or omissions of the Contractor or subcontractors.

7.12.3 The Contractor shall not commence work under this contract until it has obtained all insurance required by the Village. The Contractor shall defend, indemnify and hold the Village harmless from any and all claims, liability, losses, expenses and causes of action arising solely out of a negligent act, error, or omission or misconduct of the Contractor, or the Contractor's subcontractors, suppliers and laborers incident to the performance of the Contractor's services under this contract. The Contractor shall pay all claims, losses, fines, penalties, costs and expenses of any nature whatsoever resulting from its intentional misconduct or negligence.

7.13 Samples. Samples of items, when required, must be furnished by the Contractor free of charge to the Village. Each individual sample must be labeled with the Contractor's name and manufacturer's brand name. samples shall be delivered to the Village within five (5) calendar days of the request. The Village shall not be responsible for returning samples.

7.14 Surety Letter / Performance Bond/Payment Bond.

Evidence from a surety duly authorized to carry the business of Suretyship in the State of Florida indicating without conditions or qualifications that the Contractor is capable at the time of the bid solicitation of obtaining a Performance Bond and Payment Bond, each in an amount equal to 100% of the contract amount, pursuant to requirements as described on the Payment Bond Form found on pages 37-39 of the bid document. The letter shall make reference to the fact that the bonds would be applicable specifically to the Coral Reef Park Parking Lot (s) Improvement Project. The evidence regarding bonding capacity shall take the form of a letter from a surety indicating that such capacity exists for the Contractor. Letters indicating 'unlimited' bonding capability are not acceptable. Any surety providing such letter must be rated at least A or better and Class VIII or better by A.M. Best and Company. Evidence of surety's rating shall be attached to the letter. The letter musts specifically state that the surety has read the underlying Request for Bid and has evaluated the Contractor's backlog and work-in-progress in determining bonding capacity. As an alternative, or in addition to the surety letter required by this section, the Contractor may submit a letter or letters from bank(s) indicating a willingness to issue a letter of credit in the amount equal to 100% of contract amount without conditions or qualifications at the time of the bid submission. To be considered valid, each letter must be issued by a bank having long-term, unsecured debt ratings of not less than 'A' or 'A2', as applicable, issued by at least two of the three rating agencies (Fitch Ratings, Moody's Investor Service and Standard & Poor's Rating Group). The bank's long term, unsecured debt rating shall be stated in each letter of bank support.

7.15 Drug Free Workplace. Contractor shall provide for a drug free workplace under Florida Statute Section 287.087, as amended. Failure to provide proof of compliance when requested shall be cause for termination of this agreement. In order to have a drug-free workplace program, a business shall:

a. Publish a statement notifying employees that the unlawful manufacture, distribution, dispensing, possession, or use of a controlled substance is prohibited in the workplace and specifying the action that will be taken against employees for violations of such prohibition.

b. Inform employees about the dangers of drug abuse in the workplace, the business' policy of maintaining a drug-free workplace, any available drug counseling, rehabilitation, and employee assistance programs, and the penalties that may be imposed upon employees for drug abuse violations.

c. Give each employee engaged in providing the commodities or contractual services that are under this agreement a copy of the statement specified in subsection "a."

d. In the statement specified in subsection "a", notify the employees that, as a condition of working on the commodities or contractual services that are under Bid, the employee will abide by the terms of the statement and will notify the employer of any conviction of, or plea of guilty or nolo contendere to, any violation of Chapter 893 or of any controlled substance law of the United States or any state, for a violation occurring in the workplace no later than five (5) days after such conviction.

e. Impose a sanction on, or require the satisfactory participation in a drug abuse assistance or rehabilitation program, if such is available in the employee's community, by any employee who is so convicted.

f. Make a good faith effort to continue to maintain a drug-free workplace through implementation of this section.

7.16 Public Entity Crimes (PEC). Contractor has executed the Public Entity Crimes Form and has confirmed that the entity has not been placed on a convicted vendor list. Contractor, during the term of this agreement, may not be placed on the convicted vendor, as upon such a conviction, the Contractor may not transact business with any public entity in excess of the threshold amount provided in Sec. 287.017 for CATEGORY TWO for a period of 36 months from the date of being placed on the convicted vendor list.

7.17 Property. Property owned by the Village of Palmetto Bay is the responsibility of the Village of Palmetto Bay. Such property furnished to a Contractor for repair, modification, study, etc., shall remain the property of the Village of Palmetto Bay. Damages to such property occurring while in the possession of the Contractor shall be the

_____ Village

_____ Contractor

responsibility of the Contractor. Damages occurring to such property while in route to the Village of Palmetto Bay shall be the responsibility of the Contractor. In the event that such property is destroyed or declared a total loss, the Contractor shall be responsible for replacement value of the property at the current market value, less depreciation of the property if any.

7.18 Contractor Qualifications And Submission Requirements. Contractor, consistent with the bid requirements has submitted the following as evidence of Contractor's qualifications and experience:

1. State of Florida or Miami-Dade County License
2. Articles of Incorporation
3. Relative Experience – list of similar projects performed for other municipalities, governmental agencies, or privately owned facilities for the past two (2) years
4. Bidder Qualification Statement

7.19 No Partnership Or Joint Venture. Nothing contained in this agreement or the underlying bid shall be deemed or construed to create a partnership or joint venture between the Village of Palmetto Bay and Contractor, or to create any other similar relationship between the parties.

7.20 Village's Responsibilities. The Village will furnish the lands upon which the Work is to be done, rights-of-way for access thereto, and such other lands which are designed for the use of the Contractor. Easements for permanent structures or permanent changes in existing facilities will be obtained and paid for by the Village, unless otherwise specified in the Contract Documents. Other access to such lands or rights-of-way for the Contractor's convenience shall be the responsibility of the Contractor.

The Contractor will provide for all additional lands and access thereto that may be required for temporary construction facilities or storage of material and equipment. The Village will, upon request, furnish to the Contractor, copies of all available boundary surveys and subsurface tests at no cost.

SPECIAL CONDITIONS

SECTION 8: SPECIAL CONDITIONS:

8.1 Time of Essence. As time is of the essence and as such Contractor is to strictly comply with the timeline for completion of work; with substantial liquidated damages for failure to meet the given completion date identified as sixty (60) days following issuance of a Notice to Proceed from Village to Contractor. The Contractor agrees to complete all specified renovations on or before the 60-day timeline. Exceptions in the form of an extension of time completion may be considered; however, should this be granted in writing by the Village. Failure to comply with the construction schedule shall be considered a material breach of this agreement.

8.2 Continuing the Work. The Contractor shall carry on the Work and adhere to the progress schedule during all disputes or disagreements with the Village. No Work shall be delayed or postponed pending resolution of any disputes or disagreements, except as the Contractor and the Village may otherwise agree in writing.

8.3 Complete Project Required / Liquidated Damages To Be Assessed:

These specifications describe the various items or classes of work required, enumerating or defining the extent of same necessary, but failure to list any item or classes under scope of the several sections shall not relieve the contractor from furnishing, installing or performing such work where required by any part of these specifications, or necessary to the satisfactory completion of the project on or before the deadline for completion.

_____ Village

_____ Contractor

Liquidated Damages of $100.00 per day shall be assessed to the Contractor for each day beyond the mandatory completion date should any work not be completed in its entirety. The undersigned Contractor will Substantially Complete the work by the 60-day deadline. Time for completion of the work shall be considered as the essence of this contract, and shall be subject to liquidated damages for delays as delineated above. The Liquidated Damages award shall apply to the base bid as identified in Exhibit 1,with full completion of the whole of the work. *In an effort to expedite project commencement the sub-contractors are asked to obtain their permits via the "walk thru" procedure.

8.4 Contractor's Responsibilities.

a. Supervision and Superintendence: The Contractor will supervise and direct the Work. He will be solely responsible for the means, methods, techniques, sequences and procedures of construction. The Contractor will employ and maintain a qualified supervisor or superintendent at the Work site who shall be designated in writing by the Contractor as the Contractor's representative at the site. The supervisor shall have full authority to act on behalf of the Contractor and all communications given to the supervisor shall be as binding as if given to the Contractor. The supervisor(s) shall be present at each site at all times as required to perform adequate supervision and coordination of the Work. (Copies of written communications given to the Superintendent shall be mailed to the Contractor's office).

b. Labor, Materials and Equipment:

1.The Contractor will provide competent, suitably qualified personnel to lay out the Work and perform construction as required by the Contract Documents. The Contractor will at all times maintain good discipline and order at the site.

2.The Contractor will furnish all materials, equipment, labor, transportation, construction equipment and machinery, tools, appliances, fuel, power, light, heat, local telephone, water and sanitary facilities and all other facilities and incidentals necessary for the execution, testing, initial operation and completion of the Work.

3.All materials and equipment will be new, except as otherwise provided in the Contract Documents. When special makes or grades of material which are normally packaged by the supplier or manufacturer are specified or approved, such materials shall be delivered to the site in their original packages or containers with seals unbroken and labels intact.

4.All materials and equipment shall be applied, installed, connected, erected, used, cleaned and conditioned in accordance with the instructions of the applicable manufacturer, fabricator, or processors, except as otherwise provided in the Contract Documents.

5. Copyrights and/or Patent Rights: Contractor warrants that there has been no violation of copyrights or patent rights in manufacturing, producing or selling of goods shipped or ordered, as a result of this Contract. The seller agrees to indemnify Village from any and all liability, loss or expense occasioned by any such violation.

6. Warranty / Guaranty: Contractor shall act as agent for the Village in the follow-up and compliance of all items under Warranty / Guarantee and complete all forms for Warranty / Guarantee coverage under this Contract.

8.5 Concerning Qualifications Of Subcontractors, Material Men, And Suppliers.

a. Contractor shall submit to the Village for acceptance a list of the names of Subcontractors and such other persons and organizations (including those who are to furnish principal items of materials or equipment) proposed for those portions of the Work as to which the identity of Subcontractor and other persons and organizations must be submitted as specified in the underlying Invitation to Bid. Within thirty (30) working days from the Notice of Award, the Village will notify the Bidder in writing if after due investigation, the Village has reasonable objection to any subcontractor, person, or organization on such list. Failure of the Village to make objection to any Subcontractor, person, or organization on the list within thirty (30) days of the receipt shall constitute an acceptance of such Subcontractor, person or

_____ Village

_____ Contractor

organization. Acceptance of any such Subcontractor, person or organization shall not constitute a waiver of any right of the Village to reject defective work, material, or equipment, or work, material, or equipment not in conformance with the requirements of this Contract Document and all attachments.

b. If, prior to the Notice of Award, the Village has reasonable objection to and refuses to accept any Subcontractor, person or organization listed, the apparent low Bidder may, prior to Notice of Award, submit an acceptable substitute without an increase in their bid price.

c. The Contractor understands and agrees to specifically require and bind every Subcontractor to the applicable terms and conditions of the Contract Documents for the benefit of the Village. The Contractor shall be responsible for the coordination of the trades, Subcontractor and material men engaged upon their Work.

d. The Village will not undertake to settle any differences between the Contractor and its Subcontractors or between Subcontractors. If in the opinion of the Village, any Subcontractor on the Project proves to be incompetent or otherwise unsatisfactory, they shall be promptly replaced by the Contractor if and when directed by the Village in writing. The Contractor will not employ any Subcontractor, against whom the Village may have reasonable objection, nor will the Contractor be required to employ any Subcontractor who has been accepted by the Village, unless the Village determines that there is good cause for doing so.

e. The Contractor shall be fully responsible for all acts and omissions of his Subcontractors and of persons and organizations directly or indirectly employed by him and of persons and organizations for whose acts any of them may be liable to the same extent that they are responsible for the acts and omissions of persons directly employed by them. Nothing in the Contract Documents shall create any contractual relationship between Village and any Subcontractor or other person or organization having a direct contract with Contractor, nor shall it create any obligation on the part of Village to pay or to see to payment of any persons due subcontractor or other person or organization, except as may otherwise be required by law. Village may furnish to any Subcontractor or other person or organization, to the extent practicable, evidence of amounts paid to the Contractor on account of specified Work done in accordance with the schedule values.

f. The Contractor agrees to bind specifically every Subcontractor to the applicable terms and conditions of the Contract Documents for the benefit of the Village.

g. All Work performed for the Contractor by a Subcontractor shall be pursuant to an appropriate agreement between the Contractor and the Subcontractor.

h. The Contractor shall be responsible for the coordination of the trades, Subcontractors and material men engaged upon their Work.

i. The Contractor shall cause appropriate provisions to be inserted in all subcontracts relative to the Work to bind Subcontractors to the Contractor by the terms of these General Conditions and other Contract Documents insofar as applicable to the Work of Subcontractors, and give the Contractor the same power as regards to terminating any subcontract that the Village may exercise over the Contractor under any provisions of the Contract Documents.

j. The Village will not undertake to settle any differences between the Contractor and their Subcontractors or between Subcontractors.

k. If any Subcontractor on the Project proves to be incompetent or otherwise unsatisfactory, they shall be promptly replaced by the Contractor if and when directed by the Village in writing.

8.6 Safety And Protection. The Contractor will be responsible for initiating, maintaining and supervising all safety precautions and programs in connection with the Work, including but not limited to OSHA regulations. They will

take all necessary precautions for the safety of, and will provide the necessary protection to prevent damage, injury or loss to:

a. All employees and other persons who may be affected thereby,
b. All the Work and all materials or equipment to be incorporated therein, whether in storage on or off the site, and
c. Other property at the site or adjacent thereto, including trees, shrubs, lawns, walks, pavements, roadways, structures and utilities not designated for removal, relocation or replacement in the course of construction.

The Contractor will designate a responsible member of their organization at the site whose duty shall be the prevention of accidents. This person shall be the Contractor's Superintendent unless otherwise designated in writing by the Contractor to the Village.

8.7 Emergencies. In emergencies affecting the safety of persons or the Work or property at the site or adjacent thereto, the Contractor, without special instruction or authorization from the Village, is obligated to act, at his discretion, to prevent threatened damage, injury or loss. Contractor will give the Village prompt written notice of any significant changes in the Work or deviations from the Contract Documents caused thereby. If the Contractor believes that additional Work done by him in an emergency which arose from causes beyond his control entitles him to an increase in the Contract Price or an extension of the Contract Time as provided in the Contract documents.

8.8 Public Convenience And Safety. The Contractor shall, at all times, conduct the Work in such a manner as to insure the least practicable obstruction to public travel. The convenience of the general public and of the residents along and adjacent to the area of Work shall be provided for in a satisfactory manner, consistent with the operation and local conditions. "Streets Closed" signs shall be placed immediately adjacent to the Work, in a conspicuous position, at such locations as traffic demands. At any time that streets are required to be closed, the Contractor shall notify law enforcement agencies and in particular, the Palmetto Bay Policing Unit, before the street is closed and again as soon as it is opened. Access to fire hydrants and other fire extinguishing equipment shall be provided and maintained at all times.

In order to lessen the bridge closure timeframe, construction/renovation or any work requiring bridge closure may not commence until all necessary materials, equipment, et car in receipt of Contractor. The Village will not accept reasoning for delays and/or excessive bridge closure time as awaiting fabrication and/or delivery of materials, supplies, equipment, etc.

8.9 Use of the Premises. The Contractor shall confine his apparatus, storage of materials, and operations of his workmen to the limits indicated by law, ordinances, permits and directions of the Village, and shall not unnecessarily encumber any part of the site. The Contractor shall not overload or permit any part of any structure to be loaded with such weight as will endanger its safety, nor shall he subject any party of the work to stresses or pressures that will endanger it. Furthermore, the Contractor shall enforce the Village's instructions in connection with signs, advertisements, fires and smoking.

8.10 Protection Of Existing Property Improvements. Any existing surface or subsurface improvements, such as pavements curbs, sidewalks, pavers, pipes or utilities, footings, or structures (including portions thereof), trees and shrubbery, not otherwise identified as part of the Work shall be protected from damage during maintenance activities. Any such improvements damaged during construction of the Project shall be restored at the expense of the Contractor to a condition equal to that existing at the time of award of Contract.

8.11 Differing Site Conditions. The Village as part of the bid document provided Specifications at Exhibit 2, and which document is part of the Contract Documents. The Contractor shall within forty eight (48) hours of their discovery, and before such conditions are disturbed, notify the Village in writing, of:

_____ Village

_____ Contractor

a. Subsurface or latent physical conditions at the site differing materially from those indicated in this Contract, or
b. Unknown physical conditions at the site, of an unusual nature, differing materially from those ordinarily encountered and generally inherent in Work of the character provided for in this Contract.
c. The Village's Architect shall promptly investigate the conditions, and if it finds that such conditions do materially so differ and cause an increase or decrease in the Contractor's cost of, or the time required for, performance of any part of the Work under this Contract, whether or not changed as a result of such conditions, an equitable adjustment shall be made and the Contract modified in writing accordingly.
d. In each such case, an increase or decrease in the Contract Price or an extension or shortening of the Contract Time, or any combination thereof, will be allowable to the extent that they are attributable to any such difference.
e. If the Village and the Contractor are unable to agree as to the amount or length thereof, a claim may be made as provided in Sections 15 and 16.
f. The Contractor's failure to give notice of differing site conditions within 48 hours of their discovery or before they are disturbed shall constitute a waiver of all claims in connection therewith, whether direct or consequential in nature. No claim of the Contractor under this clause shall be allowed unless the Contractor has given the notice as required above; provided, however, the time prescribed therefore may be extended by the Village. No claim by the Contractor for an equitable adjustment hereunder shall be allowed if asserted after final payment under this contract.

8.12 Physical Conditions – Underground Utilities

a. Shown or Indicated: The information and data shown or indicated in the Contract Documents with respect to existing Underground Utilities at or contiguous to the site are based on information and data furnished to the Village, the Architect or Engineer by the owners of such Underground Utilities or by others. Unless it is expressly provided in the Conditions and/or the Section entitled "Protection of Existing Facilities" of This Agreement, the Village and the Architect shall not be responsible for the accuracy or completeness of any such information or data, and the Contractor shall have full responsibility for reviewing and checking all such information and data, for locating all Underground Utilities shown or indicated in the Contract Documents, for coordination of the Work with the owners of such Underground Utilities during construction, for the safety and protection thereof and repairing any damage thereto resulting from the Work, the cost of which will be considered as having been included in the Contract Price.

b. Not Shown or Indicated: If an Underground Utility is uncovered or revealed at or contiguous to the site which was not shown or indicated in the Contract Documents and which the Contractor could not reasonably have been expected to be aware of, the Contractor shall identify the Village of such Underground Utility and give written notice thereof to that Village, and shall notify the Architect in accordance with the requirements of the Conditions herein and Section entitled "Protection of Existing Facilities" of This Agreement.

8.13 Reference Points. The Contractor shall furnish all lines, grades, and bench marks required for proper execution of the Work. The Contractor shall preserve all bench marks, stakes, and other survey marks, and in case of their removal or destruction by its own employees or by its subcontractor's employees, the Contractor shall be responsible for the accurate replacement of such reference points by professionally qualified personnel.

_____ Village

_____ Contractor

8.14 Asbestos, Hazardous Waste, Or Toxic Or Radioactive Materials. If the Contractor observes, uncovers, or otherwise becomes aware of any asbestos, hazardous waste, or toxic or radioactive material at the site to which the Contractor or any Subcontractor, Supplier, or other person may be exposed, the Contractor shall immediately notify the Village, the Architect and Engineer and thereafter confirm any oral notice in writing. The Village will promptly consult with the Architect an Engineer concerning such condition and determine the necessity of Village's retaining special Consultants or qualified experts to deal therewith. The Contractor shall not perform any Work in connection therewith prior to receipt of special written instructions from the Village through the Architect and Engineer.

SECTION 9. SPECIFICATIONS. The Site Specifications can be found attached hereto as Exhibit 2.

SECTION 10. ARCHITECT'S STATUS DURING CONSTRUCTION

10.1 Village's Representative. The Chief Building Official, Architect and Engineer will be the Village's representative during the construction period. The duties and responsibilities and the limitations of authority of the Chief Building Official, Architect and Engineer as the Village's representative during construction are set forth in the Contract Documents.

10.2 Visits To Site. The Chief Building Official, Architect and Engineer will make visits to the site during construction to observe the progress and quality of the Work and to determine, in general, if the Work is proceeding in accordance with the Contract Documents. The Architect and Engineer will not be required to make exhaustive or continuous on-site inspections to check the quality or quantity of the Work. The Architect and Engineer will not, during such visits or as a result of such observations of the Contractor's Work in progress, supervise, direct, or have control over the Contractor's Work.

10.3 Project Representation. The Architect may furnish a Resident Project Representative to assist in observing the performance of the Work. The duties, responsibilities, and limitations of authority of any such Resident Project Representative and assistants will be as provided in the Conditions to this Agreement.

10.4 Clarifications And Interpretations. The Architect and Engineer will issue with reasonable promptness such written clarifications or interpretations of the requirements of the Contract Documents (in the form of Drawings or otherwise) as the Architect and Engineer may determine necessary, which shall be consistent with or reasonably inferable from the overall intent of the Contract Documents.

10.5 Authorized Variations In Work. The Architect and Engineer may authorize minor variations in the Work from the requirements of the Contract Documents which do not involve an adjustment in the Contract Price or the Contract Time and are consistent with the overall intent of the Contract Documents. These may be accomplished by a Field Order and will require the Contractor to perform the Work involved promptly. If the Contractor believes that a Field Order justifies an increase in the Contract Price or an extension of the Contract time and the parties are unable to agree as to the amount or extent thereof, the Contractor may make a claim therefore as provided under the indemnification or insurance provision..

10.6 Rejecting Defective Work. The Architect will have authority to reject Work which the Architect believes to be defective and will also have authority to require special inspection or testing of the Work as provided in this agreement, whether or not the Work is fabricated, installed, or completed.

10.7 Contractor Submittals, Change Orders, And Payments

a. In accordance with the procedures set forth in the in this Agreement, the Architect and Engineer will review all Contractor submittals, including shop drawings, samples, substitutes, or "or equal" items, etc., in order to determine if the items covered by the submittals will, after installation or incorporation in the Work, conform to the requirements of the Contract Documents and be compatible with the design concept

of the completed project as a functioning whole as indicated by the Contract Documents. The Architect's and Engineer's review will not extend to means, methods, techniques, sequences or procedures of construction or to safety precautions or programs incident thereto.

b. In connection with the Architect's responsibilities as to Change Orders, see Subsection 10.9 and Section 11.

c. In connection with the Architect's and Engineer's responsibilities in respect of Applications for Payment, see provision relating to same.

10.8 Decisions On Disputes.

a. The Architect will be the initial interpreter of the requirements of the Contract Documents and judge of the acceptability of the Work thereunder. Claims, disputes, and other matters relating to the acceptability of the Work; the interpretation of the requirements of the Contract Documents pertaining to the performance of the Work; and those claims in respect to changes in the Contract Price or Contract Time will be referred initially to the Architect in writing with a request for formal decision in accordance with this Section, which the Architect will render in writing within thirty (30) days of receipt of the request. Written notice of each such claim, dispute, and other matter will be delivered by the Contractor to the Architect promptly (but in no event later than thirty (30) days) after the occurrence of the event giving rise thereto. Written supporting data will be submitted to the Architect within sixty (60) days after such occurrence unless the Architect allows an additional period of time to ascertain more accurate data in support of the claim.

b. When functioning as arbiter and judge, the Architect will not show partiality to the Village or the Contractor and will not be liable in connection with any interpretation or decision rendered in good faith in such capacity. The rendering of a decision by the Architect with respect to any such claim, dispute, or other matter (except any which have been waived by the making or acceptance of final payment as provided in this agreement). will be a condition precedent to any exercise by the Village or the Contractor of such rights or remedies as either may otherwise have under the Contract Documents or by Law or Regulations in respect of any such claim, dispute, or other matter.

10.9 Limitation On Architect's Responsibilities

a. Neither the Architect's authority to act under this Section or other provisions of the Contract Documents nor any decision made by the Architect in good faith either to exercise or not exercise such authority shall give rise to any duty or responsibility of the Architect to the Contractor, any Subcontractor, any Supplier, any surety for any of them, or any other person or organization performing any of the Work.

b. Whenever in the Contract Documents the terms "as ordered," "as directed," "as required," "as allowed," "as reviewed," "as approved," or terms of like effect or import are used, or the adjectives "reasonable," "suitable," "acceptable," "proper," or "satisfactory" or adjectives of like effect or import are used to describe a requirement, direction, review, or judgment of the Architect as to the Work, it is intended that such requirement, direction, review, or judgment will be solely to evaluate the Work for compliance with the requirements of the Contract Documents, and conformance with the design concept of the completed Project as a functioning whole as indicated by the Contract Documents, unless there is a specific statement indicating otherwise. The use of any such term or adjective shall not be effective to assign to the Architect any duty or authority to supervise or direct the performance of the Work or any duty or authority to undertake responsibility contrary to the provisions relating to being an independent contractor.

c. The Architect will not have authority over or be responsible for the Contractor's means, methods, techniques, sequences, or procedures of construction, or the safety precautions and programs incident thereto, or for any failure of the Contractor to comply with Laws and Regulations, applicable to the

performance of the Work. The Architect will not be responsible for the Contractor's failure to perform the Work in accordance with the Contract Documents.

d. The Architect will not be responsible for the acts or omissions of the Contractor nor of any subcontractor, supplier, or any other person or organization performing any of the Work.

SECTION 11. CHANGES IN THE WORK

11.1 General

a. Without invalidating the Agreement and without notice to any surety, the Village may at any time or from time to time, order additions, deletions, or revisions in the Work; these will be authorized by a written Field Order and/or a Change Order issued by the Architect. Upon receipt of any such document, the Contractor shall promptly proceed with the Work involved which will be performed under the applicable conditions of the Contract Documents. Attached hereto is the Form Change Order, which shall provide additional instructions, required additional Work or direct the omission of Work previously ordered. Only those changes in the Work that are approved on the Change Order, in the Form attached hereto, and executed by an authorized representative of Village ("Change Order"), shall be binding on the Village.

b. If the Village and the Contractor are unable to agree as to the extent, if any, of an increase or decrease in the Contract Price or an extension or shortening of the Contract Time that should be allowed as a result of a Field Order, a claim may be made therefore as provided in section 1 or 13.

c. The Contractor shall not be entitled to an increase in the Contract Price nor an extension of the Contract Time with respect to any Work performed that is not required by the Contract Documents as amended, modified, supplemented by Change Order, except in the case of an emergency and except in the case of uncovering Work as provided in this agreement.

d. The Village and the Contractor shall execute appropriate Change Orders covering:

1.changes in the Work which are ordered by the Village pursuant to the provisions of this agreement;

2.changes required because of acceptance of defective Work under this agreement;

3.changes in the Contract Price or Contract Time which are agreed to by the parties; or

4.any other changes agreed to by the parties.

d. If notice of any change is required by the provisions of any Bond to be given to a surety, the giving of any such notice will be the Contractor's responsibility, and the amount of each applicable Bond shall be adjusted accordingly.

f. Village may order changes in the Work by initiating a change order request, setting forth in detail the nature of the requested change. Upon receipt of a Change Order Request, the Contractor shall prepare a statement setting forth in detail, with a suitable detailed breakdown by trades and work classifications with respect to a change in the scope of the construction and a detailed breakdown of the time and expenses related to the design phase, the Contractor's estimate of the Changes in the Contract Sum attributable to the changes set forth in such Change Order Request and proposed adjustments, if any to the Substantial Completion Date resulting from such Change Order Request. If the Village and the Contractor agree on a cost ("agreed Cost") a Change Order shall be processed by the Village and delivered to the Contractor for signature. Contractor shall not commence changes in the Work until it receives Village's written Notice to Proceed or the Change Order is executed. Agreement on any Change Order shall constitute a final settlement on all items affected therein, including without limitation any adjustment in the Contract Sum,

_____ Village

_____Contractor

the Substantial Completion Date, subject to performance thereof and payment therefore pursuant to the terms of the Agreement and such Change Order. Work provided by unit price may be increased or decreased in quantity as directed by the Village approval, provided that the basis for adjustment of the Contract Sum shall be the unit prices agreed upon by the Village upon the date of this Agreement.

g. In the event the Village and the Contractor cannot agree on any adjustment in the Contract Sum, extensions to the Contract Time, or adjustment to the Substantial Completion Date, the Contractor shall nevertheless proceed to perform the Work required by the Village's Change Order Request upon receipt of the Village's written Notice to Proceed. The Contractor shall keep separate records of all costs and time required to perform the Work required by the Change Order Request, and an equitable adjustment will be made upon agreement between the Contractor and Village. The Contractor shall submit its time and material costs that accrue as a result of the Change Order Request on a weekly basis. If the Village does not approve such submittals within seven (7) days following submission, the Contractor may cease work related to such Change Order Request until the parties agree upon the terms and conditions of such Change Order Request.

h. In the event that changes in the Work are required on an emergency basis in order to protect the health and safety of the public, the Contractor shall proceed at the written direction of the Village's authorized agent without a written Change Order from Village. The Contractor shall keep separate records of all costs and time required to perform the Work. After review and approval by the Village, the Contractor shall invoice Village in accordance on a time and materials basis. In the event that the Work can be stopped without any further harm to the public but additional Work is necessary, the Contractor shall deliver the Contractor's Estimate to the Village as soon as practical and comply with the provisions herein.

i. It is understood and agreed that refinement and detailing will be accomplished from time to time with respect to the plans and specifications and addenda. No adjustment in the Contract Sum or the Substantial Completion Date shall be made unless (a) such refinement or detailing results in changes in the scope, quality, function and/or intent of the plans and specifications and addenda not reasonably inferable or anticipatable by a Contractor of the Contractor's experience and expertise; (b) the Contractor advises Village in writing within 10 calendar days of the Contractor's receipt of said refinements and details that an adjustment is required; and (c) Village agrees to the adjustment.

j. Unless otherwise provided in the Change Order, agreement on any Change Order shall constitute a final settlement and release by the Contractor of all matters relating to the change in the Work which is subject of the Change Order, including but not limited to, all direct and indirect costs associated with such change and any and all adjustments to the Contract Sum and the construction schedule.

11.2 Allowable Quantity Variations

a. In the event of an increase or decrease in bid item quantity of a unit price within the Contract, the total amount of Work actually done or materials or equipment furnished shall be paid for according to the unit price established for such Work under the Contract Documents, wherever such unit price has been established; provided, that an adjustment in the Contract Price may be made for changes which result in an increase or decrease in the quantity of any unit price bid item of the Work in excess of twenty-five (25) percent. The Contractor shall prepare a detail description of work showing quantities, pricing, and economic and market justifications supporting the increase in price. The Village will either accept or reject the price increase.

b. In the event a part of the Work is to be entirely eliminated and no lump sum or unit price is named in the Contract Documents to cover such eliminated Work, the price of the eliminated Work shall be agreed upon in writing by the Village and the Contractor. If the Village and the Contractor fail to agree upon the price of the eliminated Work, said price shall be determined in accordance with the provisions of Section 17, below.

SECTION 12.CHANGE OF CONTRACT PRICE

12.1 General

a. The Contract Price constitutes the total compensation payable to the Contractor for performing the Work. All duties, responsibilities, and obligations assigned to or undertaken by the Contractor shall be at its expense without change in the Contract Price.

b. The Contract Price may only be changed by a Change Order. Any claim for an increase in the Contract Price shall be based on written notice delivered by the Contractor to the Architect promptly (but in no event later than thirty (30) days) after the occurrence of the event giving rise to the claim and stating the general nature of the claim. Notice of the amount of the claim with supporting data shall be delivered within sixty (60) days after such occurrence (unless the Architect allows an additional period of time to ascertain more accurate data in support of the claim) and shall be accompanied by the Contractor's written statement that the amount claimed covers all known amounts (direct, indirect, and consequential) to which the Contractor is entitled as a result of the occurrence of said event. All claims for adjustment in the Contract Price shall be determined by the Architect if the Village and the Contractor cannot otherwise agree on the amount involved. No claim for an adjustment in the Contract Price will be valid if not submitted in accordance with this Section.

c. The value of any Work covered by a Change Order or of any claim for an increase or decrease in the Contract Price shall be determined in one of the following ways:

1. Where the Work involved is covered by unit prices contained in the Contract Documents, by application of unit prices to the quantities of the items involved.

2. By mutual acceptance of a lump sum, which may include an allowance for overhead and profit not necessarily in accordance with Section 12.4.

3. On the basis of the cost of Work (determined as provided in Sections 12.2 and 12.3) plus a Contractor's fee for overhead and profit (determined as provided in Section 12.4).

12.2 Cost Of Work (Based On Time And Materials)

a. General: The term "Cost of Work" means the sum of all costs necessarily incurred and paid by the Contractor for labor, materials, and equipment in the proper performance of extra Work. Except as otherwise may be agreed to in writing by the Village, such costs shall be in amounts no higher than those prevailing in the locality of the Project. Whenever any extra Work is in progress, for which the definite price has not been agreed on in advance, the Contractor shall each day, report to the Architect the amount and cost of the labor and material used, and any other expense incurred in such extra Work on the preceding day, and no claim for compensation for such extra Work will be allowed unless such report shall have been made.

b. Labor: The cost of labor used in performing extra Work by the Contractor, a subcontractor, or other forces will be the sum of the following:

1. The actual wages paid plus any employer payments to, or on behalf of workers for fringe benefits including health and welfare, pension, vacation, and similar purposes. The cost of labor may include the wages paid to foremen when determined by the Architect that the services of foremen do not constitute a part of the overhead allowance.
2. All payment imposed by state and federal laws including, but not limited to, compensation insurance, and social security payments.

_____ Village

_____ Contractor

3. The amount paid for subsistence and travel required by collective bargaining agreements, or in accordance with the regular practice of the employer.
4. At the beginning of the extra Work and as later requested by the Architect, the Contractor shall furnish the Architect proof of labor compensation rates being paid.

c. Materials: The cost of materials used in performing extra Work will be the cost to the purchaser, whether Contractor or subcontractor, from the supplier thereof, except as the following are applicable:

1. Trade discounts available to the purchaser shall be credited to the Village notwithstanding the fact that such discounts may not have been taken by the Contractor.

2. For materials secured by other than a direct purchase and direct billing to the purchaser, the cost shall be deemed to be the price paid to the actual supplier as determined by the Architect. Markup except for actual costs incurred in the handling of such materials will not be allowed.

3. Payment for materials from sources owned wholly or in part by the purchaser shall not exceed the price paid by the purchaser for similar materials from said sources on extra Work items or the current wholesale price for such materials delivered to the Work site, whichever price is lower.

4. If in the opinion of the Architect the cost of material is excessive, or the Contractor does not furnish satisfactory evidence of the cost of such material, then the cost shall be deemed to be the lowest current wholesale price for the quantity concerned delivered to the Work site less trade discount. The Village reserves the right to furnish materials for the extra Work and no claim shall be made by the Contractor for costs and profit on such materials.

d. Equipment: The Contractor will be paid for the use of equipment as stated in the latest edition of the "Compilation of Rental Rates for Construction Equipment" by Associated Equipment Distributors. Such rental rate will be used to compute payments for equipment whether the equipment is under the Contractor's control through direct ownership, leasing, renting, or another method of acquisition. The rental rate to be applied for use of each item of equipment shall be the rate resulting in the least total cost to the Village for the total period of use. The Contractor may furnish cost data which might assist the Architect in the establishment of the rental rate.

1. All equipment shall, in the opinion of the Architect, be in good working condition and suitable for the purpose for which the equipment is to be used.

2. Before construction equipment is used on the extra Work, the Contractor shall plainly stencil or stamp an identifying number thereon at a conspicuous location, and shall furnish to the Architect, in duplicate, a description of the equipment and its identifying number.

3. Unless otherwise specified, manufacturer's ratings and manufacturer approved modifications shall be used to classify equipment for the determination of applicable rental rates. Equipment which has no direct power unit shall be powered by a unit of at least the minimum rating recommended by the manufacturer.

4. Individual pieces of equipment or tools having a replacement value of $100 or less, whether or not consumed by use, shall be considered to be small tools and no payment will be made therefore.

5. Rental time will not be allowed while equipment is inoperative due to breakdowns.

_____ Village

_____ Contractor

d. Equipment on the Work Site: The rental time to be paid for equipment on the Work site shall be the time the equipment is in productive operation on the extra Work being performed and, in addition, shall include the time required to move the equipment to the location of the extra Work and return it to the original location or to another location requiring no more time than that required to return it to its original location; except, that moving time will not be paid if the equipment is used on other than the extra Work, even though located at the site of the extra Work. Loading and transporting costs will be allowed, in lieu of moving time, when the equipment is moved by means other than its own power, except that no payment will be made for loading and transporting costs when the equipment is used at the site of the extra Work on other than the extra Work. The following shall be used in computing the rental time of equipment on the Work site.

1. When hourly rates are listed, any part of an hour less than 30 minutes of operation shall be considered to be 1/2 hour of operation, and any part of an hour in excess of 30 minutes will be considered one hour of operation.

2. When daily rates are listed, any part of a day less than 4 hours operation shall be considered to be 1/2 day of operation. When Village-operated equipment is used to perform extra Work to be paid for on a time and materials basis, the Contractor will be paid for the equipment and operator, as set forth in Sections (3), (4), and (5), following.

3. Payment for the equipment will be made in accordance with the provisions in subsection d, herein.

4. Payment for the cost of labor and subsistence or travel allowance will be made at the rates paid by the Contractor to other workers operating similar equipment already on the Work site, or in the absence of such labor, established by collective bargaining agreements for the type of workmen and location of the extra Work, whether or not the operator is actually covered by such an agreement. A labor surcharge will be added to the cost of labor described herein in accordance with the provisions of Section 12, herein, which surcharge shall constitute full compensation for payments imposed by state and federal laws and all other payments made to or on behalf of workers other than actual wages.

5. To the direct cost of equipment rental and labor, computed as provided herein, will be added the allowances for equipment rental and labor as provided in Section 12.3, herein.

12.3 Special Services

a. Special Work or services are defined as that Work characterized by extraordinary complexity, sophistication, or innovation or a combination of the foregoing attributes which are unique to the construction industry. The following may be considered by the Architect in making estimates for payment for special services:

1. When the Architect and the Contractor, by agreement, determine that a special service or Work is required which cannot be performed by the forces of the Contractor or those of any of its subcontractors, the special service or Work may be performed by an entity especially skilled in the Work to be performed. After validation of invoices and determination of market values by the Architect, invoices for special services or Work based upon the current fair market value thereof may be accepted without complete itemization of labor, material, and equipment rental costs.

2. When the Contractor is required to perform Work necessitating special fabrication or machining process in a fabrication or a machine shop facility away from the job site, the charges for that portion of the Work performed at the off-site facility may, by agreement, be accepted as a special service and accordingly, the invoices for the Work may be accepted without detailed itemization.

_____ Village

_____ Contractor

3. All invoices for special services will be adjusted by deducting all trade discounts offered or available, whether the discounts were taken or not. In lieu of the allowances for overhead and profit specified in this agreement, an allowance of five (5) percent will be added to invoices for special services.

c. All Work performed hereunder shall be subject to all of the provisions of the Contract Documents and the Contractor's sureties shall be bound with reference thereto as under the original Agreement. Copies of all amendments to surety bonds or supplemental surety bonds shall be submitted to the Village for review prior to the performance of any Work hereunder.

12.4 Reserved.

12.5 Excluded Costs

a. The term "Cost of the Work" shall not include any of the following:

1. Payroll costs and other compensation of Contractor's officers, executives, principals (of partnership and sole proprietorships) general managers, Architect, engineers, estimators, attorneys' auditors accountants, purchasing and contracting agents, expediters, time keepers, clerks, and other personnel employed by Contractor whether at the site or in Contractor's principal or a branch office for general administration of the Work and not specifically covered by the termination for default provision of this Agreement all of which are to be considered administrative costs covered by the Contractor's allowance for overhead and profit;
2. Expenses of Contractor's principal and branch offices other than Contractor's office at the site;
3. Any part of Contractor's capital expenses, including interest on Contractor's capital employed for the Work and charges against Contractor for delinquent payments;
4. Cost of premiums for all Bonds and for all insurance whether or not Contractor is required by the Contract Documents to purchase and maintain the same (except for the cost of premiums covered by the termination for default provision);
5. Costs due to the negligence of Contractor, any Subcontractor, or anyone directly employed by any of them or for whose acts any of them may be liable, including but not limited to, the correction of defective work, disposal of materials or equipment wrongly supplied, and making good any damage to property.

SECTION 13.CHANGE OF CONTRACT TIME

13.1 General

a. The Contract Time may only be changed by a Change Order. Any claim for an extension of the Contract Time shall be based on written notice delivered by the Contractor to the Architect promptly (but in no event later than seven (7) days) after the occurrence of the event giving rise to the claim and stating the general nature of the claim. Notice of the extent of the claim with supporting data shall be delivered within 15 days after such occurrence (unless the Architect allows an additional period of time to ascertain more accurate data in support of the claim) and shall be accompanied by the Contractor's written statement that the adjustment claimed is the entire adjustment to which the Contractor has reason to believe it is entitled as a result of the occurrence of said event. All claims for adjustment in the Contract Time shall be determined by the Architect in accordance with Section 12 if the Village and the Contractor cannot otherwise agree. No claim for an adjustment in the Contract Time will be valid if not submitted in accordance with the requirements of this Section.

b. The Contract Time will be extended in an amount equal to time lost due to delays beyond the control of the Contractor provided that such time lost affects the critical path as shown on the schedule if a claim is made therefore as provided in Section 13.1a. Such delays shall include: acts or neglect by the Village or others performing additional Work as contemplated by Section 12, or by acts of God or of the public

_____ Village

_____ Contractor

enemy, fire, floods, epidemics, quarantine restrictions, strikes, labor disputes, sabotage, or freight embargoes.

c. Force Majeure: The performance of this Agreement may be suspended and the obligations of either party excused in the event of and during the period that such performance is prevented or delayed by a Force Majeure occurrence.

d. All time limits stated in the Contract Documents are of the essence of the Agreement.

13.2 Extensions Of Time For Delay Due To Inclement Weather

a. Contract Times may be extended by the Architect because of delays in the completion of the Work due to unusually severe weather, provided that the Contractor shall, within ten (10) days of the beginning of any such delay, notify the Architect in writing of the cause of delay and request an extension of Contract Times. The Architect will ascertain the facts and the extent of the delay and extend the Contract times when, in its judgment, the findings of the fact justify such an extension.

b. The Contractor shall base its construction schedule upon the inclusion of the number of days of inclement weather specified herein. No extension of the Contract Time due to inclement weather will be considered until after the said number of days of inclement weather has been reached. However, no reduction in Contract Time will be made if said number of days of inclement weather is not reached.

SECTION 14. WARRANTY AND GUARANTEE; TESTS AND INSPECTIONS; CORRECTION, REMOVAL, OR ACCEPTANCE OF DEFECTIVE WORK

14.1 Warranty And Guarantee. The Contractor warrants and guarantees to the Village and the Architect that all Work will be in accordance with the Contract Documents and will not be defective. Prompt notice of defects known to the Village or Architect shall be given to the Contractor. All defective Work, whether or not in place, may be rejected, corrected, or accepted as provided in this section.

14.2 Access To Work. The Architect, Engineer and other representatives of the Village, testing agencies, and governmental agencies with jurisdictional interests shall have access to the Work at reasonable times for their observation, inspections, and testing. The Contractor shall provide proper and safe conditions for such access.

14.3 Tests And Inspections.

a. The Contractor shall give the Architect timely notice of readiness of the Work for all required inspections, tests, or approvals.

b. If Laws or Regulations of any public body having jurisdiction other than the Village require any Work to specifically be inspected, tested, or approved, the Contractor shall pay all costs in connection therewith. The Contractor shall also be responsible for and shall pay all costs in connection with any inspection or testing required in connection with the Village's or the Architect's acceptance of a Supplier of materials or equipment proposed as a substitution or (or-equal) to be incorporated in the Work, or of materials or equipment submitted for review prior to the Contractor's purchase thereof for incorporation in the Work. The costs of all inspections, tests, and approvals in addition to the above which are required by the Contract Documents shall be paid by the Village (unless otherwise specified). The Contractor will pay for failed tests and "stand-by time" by the Laboratory Tests personnel and others.

c. The Architect will make, or have made, such inspections and test as the Architect deems necessary to see that the Work is being accomplished in accordance with the requirements of the Contract Documents. Unless otherwise specified in this Agreement, the cost of such inspection and testing will be borne by the Village. In the event such inspections or tests reveal non-compliance with the requirements of the Contract

Documents, the Contractor shall bear the cost of corrective measures deemed necessary by the Architect, as well as the cost of subsequent re-inspection and retesting. Neither observations by the Architect nor inspections, tests, or approvals by others shall relieve the Contractor from the Contractor's obligation to perform the Work in accordance with the Contract Documents.

d. All inspections, tests, or approvals other than those required by Laws or Regulations of any public body having jurisdiction shall be performed by organizations acceptable to the Architect and the Contractor.

e. If any Work (including the Work of others) that is to be inspected, tested, or approved is covered without written concurrence of the Architect, it must, if requested by the Architect, be uncovered for observation. Such uncovering shall be at the Contractor's expense unless the Contractor has given the Architect timely notice of the Contractor's intention to perform such test or to cover the same and the Architect has not acted with reasonable promptness in response to such notice.

f. If any Work is covered contrary to the written request of the Architect, it must, if requested by the Architect, be uncovered for the Architect's observation and replaced at the Contractor's expense.

g. If the Architect considers it necessary or advisable that covered Work be observed by the Architect or inspected or tested by others, the Contractor, at the Architect's request, shall uncover, expose, or otherwise make available for observation, inspection, or testing as the Architect may require, that portion of the Work in question, furnishing all necessary labor, material, and equipment. If it is found that such Work is defective, the Contractor shall bear all direct, indirect, and consequential costs and damages of such uncovering, exposure, observation, inspection, and testing and of satisfactory reconstruction, including but not limited to fees and charges of Architect, engineers, attorneys, and other professionals. However, if such Work is not found to be defective, the Contractor shall be allowed an increase in the Contract Price or an extension of the Contract Time, or both, directly attributable to such uncovering, exposure, observation, inspection, testing, and reconstruction; and, if the parties are unable to agree as to the amount or extent thereof, the Contractor may make a claim therefore as provided above.

14.4 Village May Stop The Work. If the Work is defective, or the Contractor fails to perform Work in such a way that the completed Work will conform to the Contract Documents, the Village may order the Contractor to stop the Work, or any portion thereof, until the cause for such order has been eliminated; however, this right of the Village to stop the Work shall not give rise to any duty on the part of the Village to exercise this right for the benefit of the Contractor or any other party.

14.5 Correction Or Removal Of Defective Work. If required by the Architect, the Contractor shall promptly, either correct all defective Work, whether or not fabricated, installed, or completed, or, if the Work has been rejected by the Architect, remove it from the site and replace it with non-defective Work. The Contractor shall bear all direct, indirect and consequential costs and damages of such correction or removal, including but not limited to fees and charges of Architect, Engineers, attorneys, and other professionals made necessary thereby.

14.6 One-Year Correction Period.

a. If within one year after the date of Substantial Completion or such longer period of time as may be prescribed by Laws or Regulations or by the terms of any applicable special guarantee required by the Contract Documents or by any specific provision of the Contract Documents, any Work is found to be defective, the Contractor shall promptly, without cost to the Village and in accordance with Village's written notification, either correct such defective Work, or, if it has been rejected by the Village, remove it from the site and replace it with non-defective Work. If the Contractor does not promptly comply with the such notification, or in an emergency where delay would cause serious risk of loss or damage, the Village may have the defective Work corrected or the rejected Work removed and replaced, and all direct, indirect, and consequential costs and damages of such removal and replacement including but not limited to fees and charges of Architect, engineers, attorneys and other professionals will be paid by the Contractor.

b. Where defective Work (and damage to other Work resulting there from) has been corrected, removed or replaced under Subsection 14.6, the correction period hereunder, with respect to such Work will be extended for an additional period of one year after such correction or removal and replacement has been satisfactorily completed.

SECTION 15.PAYMENTS TO CONTRACTOR AND COMPLETION

15.1 Schedule Of Values (Lump Sum Price Breakdown). The schedule of values or lump sum price breakdown established as provided in this Agreement shall serve as the basis for progress payments and will be incorporated into a form of Application for Payment acceptable to the Architect.

15.2 Price Bid Schedule. Progress payments on account will be based on the amount of work completed.

15.3 Application For Progress Payment.

a. Unless otherwise prescribed by law, on the 25th of each month, or other agreed upon date, the Contractor shall submit to the Architect for review, an Application for Payment filled out and signed by the Contractor covering the Work completed as of the date of the Application and accompanied by such supporting documentation as is required by the Contract Documents.

b. The Application for Payment shall identify, as a subtotal, the amount of the Contractor's Total Earnings to Date, plus the Value of Materials Stored at the Site which have not yet been incorporated in the Work, and less a deductive adjustment for materials installed which were not previously incorporated in the Work, but for which payment was allowed under the provisions for payment for Materials Stored at the Site, but not yet incorporated in the Work.

c. The Net Payment Due to the Contractor shall be the above-mentioned subtotal from which shall be deducted the amount of retainage specified in this Agreement, and the total amount of all previous payments made to the Contractor.

d. The Value of Materials Stored at the Site shall be an amount equal to the specified percent of the value of such materials as set forth in this Agreement. Said amount shall be based upon the value of all acceptable materials and equipment not incorporated in the Work but delivered and suitably stored at the site or at another location agreed to in writing; provided, each such individual item has a value of more than $5,000 and will become a permanent part of the Work. The Application for Payment shall also be accompanied by a bill of sale, invoice, or other documentation warranting that the Contractor has received the materials and equipment free and clear of all liens, charges, security interests, and encumbrances (which are hereinafter in these General Conditions referred to as "Liens") and evidence that the materials and equipment are covered by appropriate property insurance and other arrangements to protect the Village's interest therein, all of which will be satisfactory to the Village.

15.4 Contractor's Warranty Of Title. The Contractor warrants and guarantees that title to all Work, materials, and equipment covered by an Application for Payment, whether incorporated in the Work or not, will pass to the Village no later than the time of final payment free and clear of all liens.

15.5 Review Of Applications For Progress Payment

a. The Architect will, within seven (7) days after receipt of each Application for Payment, either indicate in writing a recommendation of payment and present the Application to the Village, or return the Application to the Contractor indicating in writing the Architect's reasons for refusing to recommend payment. In the later case, the Contractor may make the necessary corrections and resubmit the Application. Thirty days after presentation of the Application for Payment with the Architect's recommendation, the amount

_____ Village

_____Contractor

recommended will (subject to the provisions of Section 17) become due and when due will be paid by the Village to the Contractor.

b. The Village may refuse to make payment of the full amount recommended by the Architect because claims have been made against the Village on account of the Contractor's performance of the Work or Liens have been filed in connection with the Work or there are other items entitling the Village to a credit against the amount recommended, but the Village must give the Contractor written notice within seven (7) days (with a copy to the Architect) stating the reasons for such action.

15.6 Partial Utilization.

a. The Village shall have the right to utilize or place into service any item of equipment or other usable portion of the Work prior to completion of the Work. Whenever the Village plans to exercise said right, the Contractor will be notified in writing by the Village, identifying the specific portion or portions of the Work to be so utilized or otherwise placed into service.

b. It shall be understood by the Contractor that until such written notification is issued, all responsibility for care and maintenance of all items or portions of the Work to be partially utilized shall be borne by the Contractor. Upon issuance of said written notice of partial utilization, the Village will accept responsibility for the protection and maintenance of all such items or portions of the Work described in the written notice.

c. The Contractor shall retain full responsibility for satisfactory completion of the Work, regardless of whether a portion thereof has been partially utilized by the Village and the Contractor's one year correction period shall commence only after the date of Substantial Completion for the Work.

15.7 Substantial Completion. When the Contractor considers the Work ready for its intended use the Contractor shall notify the Village and the Architect in writing that the Work is substantially complete and request that the Architect prepare a Certificate of Substantial Completion/Notice of Completion. Within a reasonable time thereafter, the Village, the Contractor, and the Architect shall make an inspection of the Work to determine the status of completion. If the Architect does not consider the Work substantially complete, the Architect will notify the Contractor in writing giving the reasons therefore. If the Architect considers the Work substantially complete, the Architect will prepare and deliver to the Village for its execution and recordation the Certificate of Substantial Completion/Notice of Completion signed by the Architect and Contractor, which shall fix the date of Substantial Completion. As applicable, there shall be attached to the Certificate/Notice a list of items to be completed or corrected before final payment.

15.8 Final Application For Payment. After the Contractor has completed all correction Work referred to in Section 17 and delivered all maintenance and operating instructions, schedules, guarantees, Bonds, certificates of inspection, marked-up record documents (as provided in this Agreement) and other documents, all as required by the Contract Documents, and after the Architect has indicated that the Work is acceptable, the Contractor may make application for final payment following the procedure for progress payments. The final Application for Payment shall be accompanied by all documentation called for in the Contract Documents, together with complete and legally effective releases or waivers (satisfactory to the Village) of all liens arising out of or filed in connection with the Work.

15.9 Final Payment And Acceptance

a. If, on the basis of the Architect's observation of the Work during construction and final inspection, and the Architect's review of the final Application for Payment and accompanying documentation, all as required by the Contract Documents, the Architect is satisfied that the Work has been completed and the Contractor's other obligations under the Contract Documents have been fulfilled, the Architect will, within fourteen (14) days after receipt of the final Application for Payment, indicate in writing the Architect's recommendation of payment and present the Application to the Village for payment.

_____ Village

_____Contractor

b. After acceptance of the Work by the Village's governing body, the Village will make final payment to the Contractor of the amount remaining after deducting all prior payments and all amounts to be kept or retained under the provisions of the Contract Documents, including the following items:

1. Liquidated damages, as applicable. If awarded this contract the Contractor will Substantially Complete the work within 60 working days from the date of the notice to proceed. Time for completion of the work shall be considered as the essence of this contract, and shall be subject to liquidated damages for delays at $100.00, per day. The Liquidated Damages award shall apply for the base bid, with full completion of the entire scope of work.

2. Two times the value of outstanding items of correction Work or punch list items indicated on the Certificate of Substantial Completion/Notice of Completion as being yet uncompleted or uncorrected, as applicable. All such Work shall be completed or corrected to the satisfaction of the Village within the time stated on the Certificate of Substantial Completion/Notice of Completion, otherwise the Contractor does hereby waive any and all claims to all monies withheld by the Village to cover the value of all such uncompleted or uncorrected items.

15.10 Release Of Retainage And Other Deductions

a. After executing the necessary documents to initiate the lien period, and not more than forty-five (45) days thereafter (based on a 30-day lien filing period and 15-day processing time), the Village will release to the Contractor the retainage funds withheld pursuant to the Agreement, less any deductions to cover pending claims against the Village pursuant to Section 17.

b. After filing of the necessary documents to initiate the lien period, the Contractor shall have thirty (30) days to complete any outstanding items of correction Work remaining to be completed or corrected as listed on a final punch list made a part of the Certificate of Substantial Completion/Notice of Completion. Upon expiration of the 45 days, referred to in Section 17, the amounts withheld pursuant to the provisions of Section 16 herein, for all remaining Work items will be returned to the Contractor; provided, that said Work has been completed or corrected to the satisfaction of the Village within said thirty (30) days. Otherwise, the Contractor does hereby waive any and all claims for all monies withheld by the Village under the Contract to cover two (2) times the value of such remaining uncompleted or uncorrected items.

15.11 Contractor's Continuing Obligation. The Contractor's obligation to perform and complete the Work in accordance with the Contract Documents shall be absolute. Neither recommendation of any progress or final payment by the Architect, nor the issuance of a Certificate of Substantial Completion/Notice of Completion, nor any payment by the Village to the Contractor under the Contract Documents, nor any use or occupancy of the Work or any part thereof by the Village, nor any act of acceptance by the Village nor any failure to do so, nor any review of a Shop Drawing or sample submittal, will constitute an acceptance of Work not in accordance with the Contract Documents or a release of the Contractor's obligation to perform the Work in accordance with the Contract Documents.

15.12 Final Payment Terminates Liability Of Village. Final payment is defined as the last progress payment made to the Contractor for earned funds, less retainage as applicable, less deductions listed in Section 17 herein. The acceptance by the Contractor of the final payment referred to in Section 17 herein, shall be a release of the Village and its agents from all claims of liability to the Contractor for anything done or furnished for, or relating to, the Work or for any act or neglect of the Village or of any person relating to or affecting the Work, except demands against the Village for the remainder, if any, of the amounts kept or retained under the provisions of Section 17 herein; and excepting pending, unresolved claims filed prior to the date of the Certificate of Substantial Completion/Notice of Completion.

_____ Village

_____ Contractor

SECTION 16. SUSPENSION OF WORK AND TERMINATION - MODIFICATIONS – CHANGE ORDERS

16.1 The Village may, at any time, by written change order make changes to the scope of work, and to the means and methods of performing the work. The Village may order temporary stoppage of the work or delay in performance that does not alter the scope of work. Changes, including any increase or decrease in the amount of the Contractor's compensation, shall be incorporated in written amendments to this contract.

16.2 If any change causes an increase or decrease in the price charged, the maximum amount of the contract, or the time required for performance of any part of the work under this contract, or otherwise affects the conditions of this contract, the Village shall make an equitable adjustment to the maximum amount, the price(s), the delivery schedule, or other affected terms, and shall modify the contract with a written change order.

16.3 Change orders, if applicable, may be priced, at a maximum of 10% markup on materials, services and labor related to the change order. Documentation of pricing will be required.

SECTION 17. TERMINATION FOR DEFAULT

17.1 The Village may terminate this contract, in whole or in part, when the Village determines, in its sole and absolute discretion that the Contractor is not making sufficient progress thereby endangering ultimate contract performance, or is not materially complying with any term or provision of this Contract.

17.2 Unless the Contractor's breach is waived by the Village in writing, the Village may, by written notice to the Contractor, terminate this contract upon no less than 30 day notice.

17.3 Waiver of breach of any provision of this contract shall not be deemed to be a waiver of any other breach and shall not be construed to be a modification of the terms of this contract. The provisions herein do not limit the Village's right to legal or equitable remedies.

17.4 Termination shall be effective as of the end of the notice period in the case of any uncured material breach.

17.5 The Village shall have no liability to the Contractor for future profits or losses in the event of termination for default.

17.6 The rights and remedies of the Village provided in this provision shall not be exclusive and are in addition to any other rights and remedies provided by law or under this contract.

17.7 Should Contractor provide the Village with written notice of cancellation of contract, Contractor will be required to refund a pro-rata share of the compensation identified in this agreement.

17.8 In accordance with section 2-8.4.1, of the Miami-Dade County Code, any individual or corporation or other entity that attempts to meet its contractual obligations with the Village or County through fraud, misrepresentation or material misstatements shall have its Contract terminated, whenever practicable, as determined by Village. The Village may terminate or cancel any other contracts which such individual or other subcontracted entity has with the County. Such individual or entity shall be responsible for all direct and indirect costs associated with such termination or cancellation, including attorney's fees. The foregoing notwithstanding, any individual or entity who attempts to meet its contractual obligations with the Village or County through fraud, misrepresentation or material misstatement may be disbarred from contracting for up to five (5) years.

17.9 If termination occurs, the Contractor will be paid for allowable costs incurred in carrying out activities required by this contract up to the date and time of termination.

_____ Village

_____Contractor

SECTION 18.TERMINATION FOR DELAY

18.1 If the project is suspended or the Contractor's services are delayed by the Village for more than 30 consecutive days, the Contractor may terminate this contract by giving not less than 10 days written notice.

18.2 The liability of the Village upon termination by the Contractor for suspension or delay of the project shall be for the value of services performed pursuant to the schedule contained in the statement of work rendered by Contractor to the time of termination by Contractor. The Village shall not be liable for future profits or losses.

SECTION 19. SUSPENSION OF WORK BY VILLAGE. The Village, acting through the Architect, may, at any time and without cause, suspend the Work or any portion thereof for a period of not more than ninety (90) days by notice in writing to the Contractor. The Contractor shall resume the Work on receipt from the Architect of a notice of resumption of Work. The Contractor shall be allowed an increase in the Contract Price or an extension of the Contract Time, or both, directly attributable to any suspension if the Contractor makes an approved claim therefore as provided in this agreement.

SECTION 20. TERMINATION OF AGREEMENT BY VILLAGE (CONTRACTOR DEFAULT)

a. In the event of default by the Contractor, the Village may give ten (10) days written notice to the Contractor of Village's intent to terminate the Agreement and provide the Contractor an opportunity to remedy the conditions constituting the default. It shall be considered a default by the Contractor whenever Contractor shall: (1) declare bankruptcy, become insolvent, or assign its assets for the benefit of its creditors; (2) fail to provide materials or workmanship meeting the requirements of the Contract Documents; (3) disregard or violate provisions of the Contract Documents or Architect's instructions; (4) fail to prosecute the Work according to the approved progress schedule; or, (5) fail to provide a qualified superintendent, competent workmen, or materials or equipment meeting the requirements of the Contract Documents. If the Contractor fails to remedy the conditions constituting default within the time allowed, the Village may then issue the Notice of Termination.

b. In the event the Agreement is terminated in accordance with the provisions herein, the Village may take possession of the Work and may complete the Work by whatever method or means the Village may select. The cost of completing the Work shall be deducted from the balance which would have been due the Contractor had the Agreement not been terminated and the Work completed in accordance with the Contract Documents. If such cost exceeds the balance which would have been due, the Contractor shall pay the excess amount to the Village. If such cost is less than the balance which would have been due, the Contractor shall not have claim to the difference.

SECTION 21. TERMINATION OF AGREEMENT BY Village (FOR CONVENIENCE). The Village may terminate the Agreement at any time if it is found that reasons beyond the control of either the Village or Contractor make it impossible or against the Village's interests to complete the Work. In such a case, the Contractor shall have no claims against the Village except: (1) for the value of Work performed up to the date the Agreement is terminated; and, (2) for the cost of materials and equipment on hand, in transit, or on definite commitment, as of the date the Agreement is terminated, which would be needed in the Work and which meet the requirements of the Contract Documents. The value of Work performed and the cost of materials and equipment delivered to the site, as mentioned above, shall be determined by the Architect in accordance with the procedure prescribed for the making of the final application for payment and payment under this agreement.

SECTION 22. TERMINATION OF AGREEMENT BY CONTRACTOR The Contractor may terminate the Agreement upon ten (10) days written notice to the Village, whenever: (1) the Work has been suspended under the provisions of this agreement for more than ninety (90) consecutive days through no fault or negligence of the Contractor, and notice to resume Work or to terminate the Agreement has not been received from the Village within this time period; or, (2) the Village should fail to pay the Contractor any monies due him in accordance with the

_____ Village

_____Contractor

terms of the Contract Documents and within 60 days after presentation to the Village by the Contractor of a request therefore, unless within said 10-day period the Village shall have remedied the condition upon which the payment delay was based. In the event of such termination, the Contractor shall have no claims against the Village except for those claims specifically enumerated in Section 15.3, herein, and as determined in accordance with the requirements of said Section.

SECTION 23.TERMINATION FOR LACK OF FUNDS

23.1 Not withstanding any other provisions of the contract, if the funds anticipated by the Village for the for the payment of work under this contract are at any time not forthcoming, through the failure of the Village to appropriate funds, the failure of Miami-Dade County, the Florida Legislature, or the U.S. Congress to appropriate funds, or the refusal of the administrative branch of the federal or county government to release funds, or due to any other reason for the unavailability of funds in succeeding fiscal years, or the discontinuance or material alteration of the program under which funds are to be provided, the Village shall have the right to terminate the contract without penalty by giving not less than 30 day written notification of the lack of available funding to the Contractor. The Village shall be the final authority to determine whether of not funds are available. The Village may at its discretion terminate, renegotiate and/or adjust the contract award, whichever is in the best interest of Village. Upon receipt of such notice, the Contractor shall not in

23.2 For any portion of the work that is funded by county, state, local, or federal appropriations or grants, the liability of the Village to Contractor shall be limited to payment for services when payment is received by the Village from the county, state, local, or federal authority. The Village shall submit all required documents requesting payment within a reasonable time, seven (7) working days. The Village shall not be liable to Contractor for work performed in the event that payment is not received by the Village from a county, state, local, or federal funding Village. This is a pay-when-paid clause.

SECTION 24.NO DAMAGES FOR DELAY CLAUSE

24.1 No claim for damages or any claim other than for an extension of time shall be made or asserted against the Village by reason of any weather related delays. The Contractor shall not be entitled to an increase in the contract sum or payment of compensation of any kind from the Village for direct, indirect, consequential, impact, mobilization, demobilization, or other costs, expenses or damages, including, but not limited to, costs of acceleration or inefficiency, arising because of delay, disruption, interference or hindrance from any cause whatsoever; provided, however, that this provision shall not preclude recovery or damages by the Contractor for hindrances or delays due solely to fraud, bad faith or active interference on the part of the Village or its agents. Otherwise, the Contractor shall be entitled only to extension of the contract time as the sole and exclusive remedy for a resulting delay, in accordance with and to the extent specifically provided above

24.2 Contractor shall not be considered in violation of this contract due to temporary delays due to major weather events, including tropical storms, depressions, severe rain, strong winds, hurricanes, etc. However, Contractor shall attempt to provide prior notice to the Village's contact person of any such weather related delays, and shall immediately proceed with services after such weather related events. Immediately proceed shall mean within 48 hours of such weather event.

SECTION 25. TITLE/OWNERSHIP TO MATERIALS FOUND ON THE WORK. The Village reserves the right to retain title to all soils, stone, sand, gravel, and other materials developed and obtained from excavations and other operations connected with the Work until released by the Village. Any material desired to be retained by the Village shall be delivered by the Contractor to a designed area within a six (6) mile radius of the project, at no extra cost to the Village, as directed by the Village, unless otherwise specified in the Contract Documents. Neither the Contractor nor any subcontractor shall have any right, title, or interest in or to any such materials. The Contractor will be permitted to use in the Work, if approved by the Village and Architect in writing, without charge, any such materials which meet the requirements of the Contract Documents. Once the Village releases ownership of the

_____ Village

_____Contractor

material, it shall become the property of the Contractor, who shall dispose of it in manner satisfactorily to the Architect, as provided for by the Contractor, at no extra cost to the Village.

SECTION 26. RIGHT TO AUDIT. If the Contractor submits a claim to the Village for additional compensation, the Village shall have the right, as a condition to considering the claim, and as a basis for evaluation of the claim, and until the claim has been settled, to audit the Contractor's books to the extent they are relevant. This right shall include the right to examine books, records, documents, and other evidence and accounting procedures and practices, sufficient to discover and verify all direct and indirect costs of whatever nature claimed to have been incurred or anticipated to be incurred and for which the claim has been submitted. The right to audit shall include the right to inspect the Contractor's plants, or such parts thereof, as may be or have been engaged in the performance of the Work. The Contractor further agrees that the right to audit encompasses all subcontracts and is binding upon subcontractors. The rights to examine and inspect herein provided for shall be exercisable through such representatives as the Village deems desirable during the Contractor's normal business hours at the office of the Contractor. The Contractor shall make available to the Village for auditing, all relevant accounting records and documents, and other financial data, and upon request, shall submit true copies of requested records to the Village.

SECTION 27. JURISDICTION AND VENUE. For the purposes of this contract, Florida law shall govern the terms of this contract. Venue shall be in Miami-Dade County, Florida.

SECTION 28. SOVEREIGN IMMUNITY AND ATTORNEY'S FEES. The Village does not waive sovereign immunity under 768.28, Florida Statutes, for any claim for breach of contract or for an award of prejudgment interest; provided, however, that in any action arising out of or to enforce this contract, the prevailing party shall be entitled to its reasonable attorney's fees and costs in any state or federal administrative, circuit court and appellate court proceedings. In the event of any litigation arising out of this agreement or project agreement, each party hereby knowingly, irrevocably, voluntarily, and intentionally waives its right to trial by jury.

SECTION 29.NOTICES All notices given or required under this contract shall be deemed sufficient if sent by certified mail, return receipt requested, to the addresses of the Contractor and to the Village specified in this contract, unless either party shall specify to the other party a different address for the giving of the notices. Additionally, whenever any provision of the Contract Documents requires the giving of written notice, it will be deemed to have been validly given if delivered in person to the individual or to a member of the firm or to an officer of the corporation for whom it is intended, or if delivered at or sent by registered or certified mail, postage prepaid, to the last business address known to the giver of the notice.

SECTION 30. CONTRACTING OFFICER REPRESENTATION. For the purposes of this contract, the contracting officers are as follows:

To the Village: Ron E. Williams, Village Manager
Village of Palmetto Bay
9705 East Hibiscus Street
Palmetto Bay, Florida 33157

To Contractor: Mr. Jorge Lorenzo
H & J Asphalt, Inc.
4310 NW 35th, Avenue
Miami, FL 33142

_____ Village

_____ Contractor

An individual or delegated committee will be designated to represent the Village in all matters pertaining to the work as it progresses. Interference by unauthorized individuals must be controlled so as no to impede the smooth progress of the work. Contractor shall review all work to be accomplished with project representative to preclude misunderstandings.

SECTION 31. RECORD RETENTION AND AUDITS. Contractor shall comply with Chapter 119, Florida Statutes, and public record retention requirements and shall maintain a copy of all documents reflecting services rendered to Village for five (5) years after the termination of this Agreement, close out, and/or final payment has been made and all other pending matters are closed. Further, Contractor shall be provided access to Village, to any government authority, or any other person pursuant to a public records request, to any books, documents, papers, and records which are directly pertinent to this Agreement for the purpose of making audit, examination, excerpts and transcriptions. The Contractor agrees to include in first-tier subcontracts approved under this contract a clause substantially the same as that of this provision. The right to access and examination of records provided herein shall continue until disposition of any mediation, claims, litigation or appeals. The Contractor shall maintain accounts and records, including, but not limited to, personnel, property, and financial records, adequate to identify and account for all costs pertaining to the Contract and such other records as may be deemed necessary by Village to assure proper accounting for all project funds.

SECTION 32. WARRANTIES.

32.1 Contractor warrants that it: (a) is duly licensed by the State of Florida and Miami-Dade County to provide services identified herein; (b) has not provided a commission, bonus or other benefit or payment to any person to procure this contract other than paying the salaries of employees in the ordinary course of business; (c) has not committed a violation of a public entity crime statute and is not otherwise disqualified by the State of Florida from entering into this Agreement; (d) no member or delegate to the U.S. Congress or Resident Commissioner shall be admitted to any share or part of this contract or to any benefit to arise there from; (e) no member, officer, or employee of the Village shall or for one (1) year after current tenure, have any interest, direct or indirect, in this contract; (f) proceeds shall not be used to influence federal legislation as defined in 31 USC 9101(1); (g) Contractor shall warrant all labor and parts for a period of one year from completion; and (h) any manufacturer's warranties shall also be provided to Village, as applicable. Contractor shall provide a Public Entity Crime Affidavit to the Village Manager upon executing this contract (included in Exhibit 7).

32.2 Contractor will meet the requirements of any manufacturer's labor and material warranty according to specifications submitted by any manufacturer with this proposal and secure warranty for Village upon completion and payment in full, as these specifications pertain to Contractor.

32.3 Contractor shall provide a one (1) year guarantee against defects in materials or work upon completion of installation, as applicable. Any materials or work which is or becomes defective during the guarantee period shall be replaced by the Contractor with the understanding that all replacements shall carry the same guarantee as the original equipment. Such replacement shall be made immediately upon receiving notification from the Village or its representatives.

32.4 The Contractor shall guarantee that the materials and workmanship of the apparatus installed or rehabilitated by the Contractor under this agreement shall be "first class" in every respect and that Contractor shall make good any defects not due to ordinary wear and tear or improper use, which may develop within one year of the date of final acceptance and final inspection of all equipment. Neither the final payment nor any provision of the agreement shall relieve the Contractor of the extent and period provided by law and upon written notice Contractor shall remedy any defects due thereto and pay all expenses for any damage to other work resulting there from. The same guarantee shall be applicable to the total job in the event equipment is reused or modified. The one-year guarantee for all windows shall start from the date of final acceptance of the complete job.

_____ Village

_____Contractor

SECTION 33. OWNERSHIP OF DOCUMENTS. All documents, reports, plans, specifications or other records, including electronic records, resulting from the professional services rendered by the Contractor under the Contract Document shall be deemed the property of the Village and the Village shall have all rights incident to this ownership. The Contractor acknowledges that all documents prepared under this contract shall be public records, and shall be subject to public inspection and copying, as provided by Florida Statutes Chapter 119. Upon conclusion of this contract and any extensions, all documents shall be delivered by the Contractor to the Village. The Contractor shall have the right to retain copies of the documents at the Contractor's expense.

SECTION 34. SEVERABILITY. Should any section or any part of any section of this contract be rendered void, invalid or unenforceable by any court of law, for any reason, the determination shall not render void, invalid or unenforceable any other section or part of any section of this contract.

SECTION 35. ENTIRE CONTRACT. The contract, when signed by all of the parties, constitutes the full and complete understanding and contract of all parties and may not be in any manner interpreted or fulfilled in contradiction of its express terms. This contract and the incorporated attachments constitute the entire understanding between the parties and integrates by its terms all previous contracts or understandings, oral or written, between the parties. In the event of any conflict, the terms of this contract will govern over the provisions of any incorporated documents. Headings are for convenience of reference only and shall not be considered in any interpretation of this agreement. Each Exhibit referred to in this agreement forms an essential part of this agreement. The Exhibits if not physically attached, should be treated as part of this agreement, and are incorporated by reference. This agreement may be executed in several counterparts, each of which shall be deemed an original and such counterparts shall constitute one and the same instrument.

SECTION 36. CONTINGENCY FEE AND CODE OF ETHICS WARRANTY

36.1 Contractor warrants that neither it, nor any principal, employee, agent, representative or family member has promised to pay, and Contractor has not, and will not, pay a fee the amount of which is contingent upon the Village awarding this contract to Contractor.

36.2 Contractor warrants that neither it, nor any principal, employee, agent, representative or family member has procured, or attempted to procure, this contract in violation of any of the provisions of the Miami-Dade County or the Village's conflict of interest and code of ethics ordinances. A violation of this section will result in the termination of the contract and forfeiture of funds paid, or to be paid, to the Contractor.

36.4 During the performance of the awarded contract, the successful Contractor agrees as follows:

a. The Contractor shall not discriminate against any employee or applicant for employment because of race, color, religion, sex, sexual orientation or national origin.
b. The Contractor shall take affirmative action to ensure that applicants are employed, and that employees are treated during employment, without regard to its race, color, religion, sex, sexual orientation or national origin. Such action shall include, but not be limited to, (1) employment, (2) upgrading, (3) demotion, (4) transfer, (5) recruitment or recruitment advertising, (6) layoff or termination, (7) rates of pay or other forms of compensation, and (8) selection for training, including apprenticeship.
c. The Contractor shall post in conspicuous places available to employees and applicants for employment the notices to be provided by the contracting officer that explain this clause.
d. The Contractor shall, in all solicitations or advertisements for employees placed by or on behalf of the Contractor, state that all qualified applicants will receive consideration for employment without regard to race, color, religion, sex, sexual orientation or national origin.
e. The Contractor shall send, to each labor union or representative of workers with which it has a collective bargaining contract or other contract or understanding, the notice to be provided by the contracting officer

_____ Village

_____Contractor

advising the labor union or workers' representatives of the Contractor's commitments under this clause, and post copies of the notice in conspicuous places available to employees and applicants for employment.
f. The Contractor shall comply with Executive Order 11246, as amended, and the rules, regulations, and/orders of the Secretary of Labor.
g. The Contractor shall furnish all information and reports required by Executive Order 11246, as amended and by rules, regulations, and/orders of the Secretary of Labor. The Contractor shall permit access to its books, records, and accounts by the Secretary of Labor for purposes of investigation to ascertain compliance with the rules, regulations, and/orders.
h. In the event of a determination that the Contractor is not in compliance with this clause or any rule, regulation, or order of the Secretary of Labor, this contract may be canceled, terminated, or suspended in whole or in part, and the Contractor may be declared ineligible for further Governmental contracts, or federally assisted construction contracts under the procedures authorized in Executive Order 11246, as amended, the rules, regulations, and/orders of the Secretary of Labor, or as otherwise provided by law.
i. The Contractor shall include the terms and conditions of this clause in every subcontract or purchase order unless exempted by the rules, regulations, or orders of the Secretary of Labor issued under Executive Order 11246, as amended, so that these terms and conditions will be binding upon each subcontractor or vendor. The Contractor shall take the action with respect to any subcontract or purchase orders as the Department of Labor may direct as a means of enforcing the provisions, including sanctions for noncompliance; provided that if the Contractor becomes involved in, or is threatened with, litigation with a subcontractor or vendor as a result of the direction, the Contractor may request the United States to enter into the litigation to protect the interests of the United States.

36.5 Contractor and its associates covenant that they have no interest and will not acquire any interest, direct or indirect, which would conflict in any manner or degree with the performance of services required to be performed under this contract. Contractor is to comply with the Copeland "Anti-Kickback" Act (18 U.S.C. 874), as supplemented in Department of Labor Regulations (29 CFR Part 3).

36.7 No member, officer or employee of Village, or its designees or agents, no member of the governing body of the locality or localities who exercise any functions or responsibilities with respect to the program during his tenure or for one (1) year thereafter, shall have any interest, direct or indirect in any contract or subcontract, or the proceeds thereof, for work to be performed in connection with the program assisted under the Contract.

SECTION 37. WARRANTY OF AUTHORITY. The signatories to this contract warrant that they are duly authorized by action of their respective Village commission, board of directors or other Village to execute this contract and to bind the parties to the promises, terms, conditions and warranties contained in this contract.

SECTION 38. MISCELLANEOUS PROVISION. In the event a court must interpret any word or provision of this agreement, the word or provision shall not be construed against either party by reason of drafting or negotiating this agreement.

SECTION 39. PERFORMANCE BOND.

39.1 Within ten (10) business days after its acceptance of the terms and conditions of this agreement, the Contractor shall file with the Village clerk, a bond in the amount of the contract having as a surety a company qualified to do business in the State of Florida and reasonably acceptable to the Village (the "performance bond"). The performance bond shall secure the full and faithful performance by the Contractor of all requirements, duties, and obligations imposed upon the Contractor by the provisions of this agreement. The performance bond shall provide that the surety shall give sixty (60) days prior written notice of any cancellation thereof to the Village. The Contractor shall cause the performance bond to be renewed or replaced and in effect at all times throughout the term of this agreement.

_____ Village

_____Contractor

39.2 Upon the request of the Village in connection with any construction or installation of facilities under this agreement in which the cost exceeds $50,000, and prior to the issuance of any permits therefore, the Contractor shall file with the Village clerk prior to the construction or installation, a bond in an amount equal to the projected cost of the construction having as a surety a company qualified to do business in the State of Florida and reasonably acceptable to the Village (the "construction bond"). The construction bond shall be conditioned on the completion of the applicable construction of facilities by the Contractor in compliance with all applicable permits, laws, rules, and regulations. The construction bond shall provide that the surety shall give sixty (60) days prior written notice of any cancellation thereof to the Village. Upon Contractor's written request, the Village shall release each such construction bond twelve (12) months after the completion of the applicable construction and restoration in compliance with all applicable permits, laws, rules, and regulations.

39.3Recovery by the Village under a performance bond, construction bond or under insurance shall not limit the Contractor's indemnification obligations set firth in this agreement with respect to its construction, maintenance, and operations, provided that the Village shall not be entitled to double recovery. Recovery by the Village under either a bond or insurance is in addition to all other rights of the Village, whether specified in this agreement or authorized by law, provided that the Village shall not be entitled to double recovery. If a performance bond or construction bond required by this agreement and previously approved by the Village is suspended, voided, or cancelled and not replaced, then the occurrence shall be a violation of this agreement, subject to the notice and cure periods and remedies provided in this agreement.

SECTION 40. ADDITIONAL BOND. It is further mutually agreed between the parties hereto that if, at any time after the execution of this Agreement and the Performance and Payment Bonds, which bonds shall be guaranteed for a 100% of the construction cost price, hereto attached for its faithful performance, the Village shall deem the surety or sureties upon such bonds to be unsatisfactory, or if, for any reason, such bond(s) ceases to be adequate to cover the performance of the work, the Contractor shall at his/her expense, and within three (3) days after the receipt of Notice from the Village to do so, furnish an additional bond or bonds, in such a form and amount, and with such sureties as shall be satisfactory to the Village. In such event, no further payment to the Village shall be deemed due under this Agreement until such new or additional security for the faithful performance of the work shall be furnished in the manner and form satisfactory to the Village.

[SIGNATURE PAGE TO FOLLOW]

_____ Village

_____Contractor

IN WITNESS WHEREOF, the parties execute this agreement on the respective dates under each signature: The Village, signing by and through its Village manager, attested to by its Village clerk, duly authorized to execute same and by Contractor by and through its president, whose representative has been duly authorized to execute same through a resolution of the corporation or partnership.

Village of Palmetto Bay

By: _____
Ron E. Williams, Village Manager

Contractor

By: _____
Mr. Jorge Lorenzo

Approved as to form:

By: _____
Eve A. Boutsis,
Village Atorney

_____ Village

_____ Contractor

CHANGE ORDER

TO : Village Of Palmetto Bay
Project: Coral Reef Park Parking Lot (s) Improvement Bid 2013-PR-04

Contractor: _____
Date:_____

This Change Order will authorize the following change to the Contract:

The Work as set forth in the Contract is hereby amended to include the items set forth on Exhibit "A" attached hereto and by this reference made a part hereof.

This change Order constitutes full, final and complete compensation to the Contractor for all costs, expenses, overhead, and profit and any damages of every kind that the Contractor may incur in connection with the above referenced changes in the Work, and any other effect on any of the Work under this Contract. The Contractor acknowledges and agrees that (a) the Guaranteed Maximum Price of $_____ under the Contract will be [unchanged] [changed] by this Change Order; and (b) the schedule for performance of work will be [unchanged] [changed] by this Change Order. Contractor expressly waives any claims for any additional compensation, damages or time extension in connection with the above-referenced changes. Except as herein or heretofore expressly modified, all terms of the Contract shall remain in full force and effect and shall cover the performance of, and payment for, any work authorized hereunder. Any defined terms not defined in this Change Order shall have the meanings set forth in the Contract.

By signing below the parties indicate acceptance of this Change Order as set forth herein.

VILLAGE	CONTRACTOR
By:_____	By:_____
Name: _____	Name: _____
Title: _____	Title:_ _____

_____ Village

_____Contractor

To: Honorable Mayor and Village Council

Date: August 30, 2013

From: Ron E. Williams, Village Manager

Re: Interlocal Agreement For Participation in the Parking Fines Reimbursement Program

A RESOLUTION OF THE MAYOR AND VILLAGE COUNCIL OF THE VILLAGE OF PALMETTO BAY, FLORIDA, RELATING TO AGREEMENTS; AUTHORIZING THE VILLAGE MANAGER TO ENTER INTO AN INTERLOCAL AGREEMENT WITH MIAMI-DADE COUNTY FOR THE VILLAGE'S PARTICIPATION IN THE PARKING FINES REIMBURSEMENT PROGRAM; AND PROVIDING FOR AN EFFECTIVE DATE.

BACKGROUND AND ANALYSIS:
In accordance with Section 30-447 of the Code of Miami-Dade County, one-third of the parking fine money generated from the misuse of marked spaces for people with disabilities is used to defray Clerk of Courts' administrative expenses. Two-thirds of the fine money generated is used to improve accessibility and equal opportunity to qualified persons who have disabilities in the municipality and to conduct disability public awareness programs. Thirty percent of the two-thirds of funds collected are retained by the County for county-wide purposes, in accordance with State law. The other seventy percent is allocated to the governmental agency having jurisdiction over the violation.

In order to participate in the program, municipalities must submit an executed interlocal agreement and the annual affidavit signed by the Village's Chief Administrative Office for reimbursement of funds accrued. The newly executed interlocal agreement will remain on file until further notice. The funds reimbursed will be utilized for the improvement of accessibility and equal opportunity to qualified persons who have disabilities in the Village of Palmetto Bay and to conduct disability public awareness programs. The Administration is requesting authorization to enter into an agreement with Miami-Dade County Internal Services Department for the reimbursement of parking fines to improve accessibility and equal opportunity to qualified persons who have disabilities in the municipality and to conduct disability public awareness programs in the Village of Palmetto Bay.

FISCAL/BUDGETARY IMPACT: None.

RECOMMENDATION:
Approval is recommended.

RESOLUTION NO. _____

A RESOLUTION OF THE MAYOR AND VILLAGE COUNCIL OF THE VILLAGE OF PALMETTO BAY, FLORIDA, RELATING TO AGREEMENTS; AUTHORIZING THE VILLAGE MANAGER TO ENTER INTO AN INTERLOCAL AGREEMENT WITH MIAMI-DADE COUNTY FOR THE VILLAGE'S PARTICIPATION IN THE PARKING FINES REIMBURSEMENT PROGRAM; AND PROVIDING FOR AN EFFECTIVE DATE.

WHEREAS, in accordance with Section 30-447 of the Code of Miami-Dade County, one-third of the parking fine money generated from the misuse of marked spaces for people with disabilities is used to defray Clerk of Courts' administrative expenses and two-thirds is used to provide funds to improve accessibility and equal opportunity to qualified physically disabled persons and to provide funds to conduct public awareness programs concerning physically disabled persons; and

WHEREAS, thirty percent of the two-thirds of funds collected are retained by the County for county-wide purposes in accordance with State law and seventy percent is allocated to the governmental agency having jurisdiction over the violation; and

WHEREAS, the funds reimbursed will be utilized for the improvement of accessibility and equal opportunity to qualified persons who have disabilities in the Village of Palmetto Bay and to conduct disability public awareness programs; and

WHEREAS, the Administration is requesting authorization to enter into an agreement with Miami-Dade County Internal Services Department for the reimbursement of parking fines; and

NOW, THEREFORE, BE IT RESOLVED BY THE MAYOR AND VILLAGE COUNCIL OF THE VILLAGE OF PALMETTO BAY, FLORIDA, AS FOLLOWS:

Section 1. The Village of Palmetto Bay Council authorizes the Village Manager to execute an Interlocal Agreement between Miami-Dade County and the Village of Palmetto Bay for the Village's participation in the Parking Fines Reimbursement Program.

Section 2. This resolution shall take effect immediately upon approval.

PASSED AND ADOPTED this _____ day of September, 2013

Attest: _____

Meighan J. Alexander
Village Clerk

_____

Shelley Stanczyk
Mayor

APPROVED AS TO FORM:

_____

Eve A. Boutsis,
FIGUEREDO & BOUTSIS, P.A., as Office
of the Village Attorney

FINAL VOTE AT ADOPTION:

Council Member Patrick Fiore _____

Council Member Tim Schaffer _____

Council Member Joan Lindsay _____

Vice-Mayor John DuBois _____

Mayor Shelley Stanczyk _____

OFFICE OF THE MAYOR
MIAMI-DADE COUNTY, FLORIDA

CP/DC

CARLOS A. GIMENEZ
MAYOR

June 20, 2013

Ron E. Williams, Village Manager
Office of the Village Manager
Palmetto Bay Village
9705 East Hibiscus Street
Palmetto Bay, FL 33157

Dear Mr. Williams:

Miami-Dade County (County) is commencing the process for the Fiscal Year 2012-2013 Parking Fines Reimbursement Program. The Interlocal Agreement between the County and the municipalities has been revised. In order to participate in the program, each municipality must submit a new executed Interlocal Agreement and the annual Affidavit (enclosed). The executed Interlocal Agreement will remain on file until further notice. The Affidavit states that the funds reimbursed shall be used to improve accessibility and equal opportunity to qualified persons who have disabilities in the municipality and to conduct disability public awareness programs.

Reimbursements to municipalities are based on a percentage of revenue collected during Fiscal Year 2011-2012. The amount is determined by calculating the total amount of fine collected on tickets issued in a municipality divided by the total number of tickets paid countywide. Funding estimates include a percentage of the carryover monies that were not distributed to any municipality in the previous year.

The **Village of Palmetto Bay** is entitled to **$1,500** as a result of fines collected in the previous fiscal year and unspent funds from other municipalities. The aforementioned Affidavit must be submitted within 60 days of the date of this letter to receive these funds.

In accordance with Section 30-447 of the Code of Miami-Dade County, parking fine funds generated from the misuse of marked spaces for people with disabilities is used in the following manner:

- One-third of the funds are to be used to defray the Clerk of Courts' administrative expenses, and
- Two-thirds of the funds are to be used to improve accessibility and equal opportunity to qualified physically disabled persons and to provide funds to conduct public awareness programs concerning physically disabled persons. Of this amount, 30 percent is retained by the County for countywide purposes, in accordance with State law and 70 percent is allocated to the governmental entity having jurisdiction over the violation.

If you need additional information regarding the Parking Fines Reimbursement Program, please contact Heidi Johnson-Wright, ADA Coordinator at 305-375-3566. Please return the Interlocal Agreement and Affidavit to the attention of Ms. Johnson-Wright at Miami-Dade County, Internal Services Department, 111 NW 1st Street, 24th Floor, Miami, FL 33128.

Sincerely,

Carlos A. Gimenez
Mayor

Enclosures

c: Edward Marquez, Deputy Mayor, Miami-Dade County
Lester Sola, Director, Internal Services Department
Jennifer Moon, Director, Office of Management and Budget
Leland Salomon, Assistant Director, Internal Services Department
Heidi Johnson-Wright, ADA Coordinator, Internal Services Department

MIAMI-DADE COUNTY
MUNICIPAL PARKING FINES REIMBURSEMENT PROGRAM
INTERLOCAL AGREEMENT

This agreement is entered into this_____ (day) of _____(month/year), by and between Miami-Dade County, Florida, a political subdivision of the State of Florida (the "County") and _____(the "municipality"), a municipal corporation organized and existing under the laws of the State of Florida.

WITNESSETH

WHEREAS, Section 316.008 Florida Statutes, and Section 30-447 Code of Miami-Dade County, authorizes the charging of fines for misuse of specially marked parking spaces for people with disabilities, and

WHEREAS, Miami-Dade County proposes to distribute said fines under the provisions of Section 30-447 of the Code of Miami-Dade County, Florida.

NOW THEREFORE in consideration of the covenants contained herein, the parties agree as follows

1. This agreement shall become effective upon its execution by the authorized officers of the parties and will continue annually upon agreement by both parties.

2. The allocation of the disabled parking fine monies shall be used to provide funds to improve accessibility and equal opportunity to qualified persons who

have disabilities and to provide funds to conduct public awareness programs in the County or municipality concerning persons who have disabilities.

3. The municipality shall annually submit an affidavit sworn by its chief administrative official to the Miami-Dade County Internal Services Department ("ISD").

4. The affiant will affirm that expenditures meet the following criteria:

    a. The funds reimbursed shall be used to improve accessibility and equal opportunity to qualified persons who have disabilities in the municipality and to conduct public awareness programs in the municipality concerning persons who have disabilities.

    b. If only a portion of the project or program is being promoted to benefit people with disabilities, then only that portion of the project or program may be funded with these monies.

5. The parties agree to follow the terms and conclusions regarding payment as follows:

    a. The percentage for distribution shall be calculated by the County annually. Each year the County shall notify all municipalities of the percentages of distribution of the disabled permit parking fine money for the upcoming annual period. The percentage for distribution to the County and to the

municipalities is based on a percentage of total revenue which is determined by calculating the total number of fines paid county-wide. Funding estimates include a percentage of the monies which were not distributed to any municipality in the previous year.

b. The County agrees to pay the County and the municipalities under this agreement based on a payment schedule agreed upon by ISD, accompanied by such documentation as requested.

c. In no event shall County funds be advanced to any subcontractor hereunder.

d. The parties shall return funds to the Clerk of the Board of County Commissioners if the project is not successfully completed and allow ISD to audit projects and conduct site visits. Any such audits or inspections shall be conducted in such manner and at such times so as not to unreasonably interfere with the day-to-day operation of the parties.

e. The County may amend the terms of this agreement from time to time, as it may deem necessary.

IN WITNESS WHEREOF, the parties have caused this agreement to be executed by their respective and duly authorized officers on the date hereinabove first mentioned.

MUNICIPAL PARKING FINES REIMBURSEMENT PROGRAM

AFFIDAVIT

State of Florida, County of _____

BEFORE ME, the undersigned Notary, _____ *[name of Notary before whom affidavit is sworn]*, on this _____ *[day of month]* day of _____ *[month]*, 20____, personally appeared _____ *[name of affiant]*, known to me to be a credible person and of lawful age, who being by me first duly sworn, on _____ *[his or her]* oath, deposes and says:

The municipal parking fines funds reimbursed shall be used to improve accessibility and equal opportunity to qualified persons who have disabilities in the municipality and to conduct public awareness programs in the municipality concerning persons who have disabilities.

If only a portion of the project or program is being promoted to benefit people with disabilities, then only that portion of the project or program will be funded with these monies.

The municipality shall return funds to the Clerk of the Board of Miami-Dade County Commissioners if the project is not successfully completed and allow the Miami-Dade County Internal Services Department to audit projects and conduct site visits. Any such audits or inspections shall be conducted in such manner and at such times so as not to unreasonably interfere with the day-to-day operation of the parties.

_____

[signature of affiant]

_____

[typed name of affiant]

_____
[address of affiant, line 1]

_____
[address of affiant, line 2]

State of Florida, County of _____

Sworn to (or affirmed) and subscribed before me this _____ day of

_____(*month*), _____ (*year*), by

_____ (*name of person making statement*).

_____
(*Signature of Notary Public - State of Florida*)

_____
(*Print, Type, or Stamp Commissioned Name of Notary Public*)

Personally Known _____ OR Produced Identification _____

Type of Identification Produced _____

ATTEST:

_____

Harvey Ruvin, Clerk

MIAMI-DADE COUNTY, FLORIDA

By: _____

Carlos A. Gimenez, Mayor

ATTEST:

_____

City/Town/Village Clerk

MUNICIPALITY OF _____, FLORIDA

By:_____

City/Town/Village Manager

(Date)

(Official Seal)

To: Honorable Mayor and Village Council

Date: August 30, 2013

From: Eve A. Boutsis, Office of Village Attorney

Re: Clarification of Employment of Village Clerk

A RESOLUTION OF THE MAYOR AND VILLAGE COUNCIL OF THE VILLAGE OF PALMETTO BAY, FLORIDA, RELATING TO THE VILLAGE CLERK; CLARIFYING TERMS OF EMPLOYMENT WITH VILLAGE CLERK MEIGHAN ALEXANDER; PROVIDING AN EFFECTIVE DATE.

BACKGROUND AND ANALYSIS:

On November 25, 2002, the Mayor and Village Council confirmed the appointment of the current Village Clerk Meighan Alexander to serve as the first official Village Clerk of Palmetto Bay. In the winter of 2009, the Council directed the Village Attorney to draft an employment agreement that included several provisions, including salary and benefits. The Council did not provide clear direction on a certain aspects of the agreement. While the Council has the responsibility to establish the Clerk's and the Village Manager's salaries, the agreement with the Clerk does not contain standard language that would allow her to benefit in the same ways as other administrative employees and the Village Council, such as cost of living increases, education reimbursement, and other important incentives.

The Village Manager and I have discussed this matter with the Clerk and believe that the proposed Resolution clearly reflects equity that should be provided to this Charter Officer who has served the Village faithfully for over ten years.

FISCAL/BUDGETARY IMPACT:

The Village will include sufficient funds within the Budget to cover any benefits provided. Impact to the Budget is minimal.

RECOMMENDATION:

Approval.

RESOLUTION NO. _____

A RESOLUTION OF THE MAYOR AND VILLAGE COUNCIL OF THE VILLAGE OF PALMETTO BAY, FLORIDA, RELATING TO THE VILLAGE CLERK; CLARIFYING TERMS OF EMPLOYMENT WITH VILLAGE CLERK MEIGHAN ALEXANDER; PROVIDING AN EFFECTIVE DATE.

WHEREAS, on November 25, 2002, the Mayor and Village Council selected Meighan Alexander as their first Village Clerk. In December of 2009, an employment agreement delineated the terms of her employment. As the agreement defines the terms, it does not include language that would allow the Clerk to benefit in the same manner as other employees; and,

WHEREAS, the Mayor and Village Council desire to clarify the terms of employment of the Village Clerk.

NOW, THEREFORE, BE IT RESOLVED BY THE MAYOR AND VILLAGE COUNCIL OF THE VILLAGE OF PALMETTO BAY, FLORIDA, AS FOLLOWS:

Section 1. The above whereas clauses are incorporated by reference.

Section 2. The Village Council acknowledges and clarifies the terms of employment, as follows: Meighan Alexander, the Village Clerk, shall be entitled to receive the same annual cost of living increase and shall receive other benefits as may be granted to other administrative employees and the Village Council.

Section 3. This resolution shall take effect immediately upon approval.

PASSED and ADOPTED this ____ day of September, 2013.

Attest: _____
Meighan Alexander
Village Clerk

_____
Shelley Stanczyk
Mayor

APPROVED AS TO FORM:

_____
Eve A. Boutsis,
FIGUEREDO & BOUTSIS, P.A., as Office
of the Village Attorney

FINAL VOTE AT ADOPTION:

Council Member Patrick Fiore _____

Council Member Tim Schaffer _____

Council Member Joan Lindsay _____

Vice-Mayor John DuBois _____

Mayor Shelley Stanczyk _____

RESOLUTION NO. _____

A RESOLUTION OF THE MAYOR AND VILLAGE COUNCIL OF THE VILLAGE OF PALMETTO BAY, FLORIDA, RELATING TO ATTORNEYS' FEES; APPROVING ATTORNEYS' FEES AND COSTS FOR FIGUEREDO & BOUTSIS, P.A. IN THE AMOUNT OF $29,878.49; PROVIDING AN EFFECTIVE DATE.

WHEREAS, the Village Council of the Village of Palmetto Bay approved resolution no. 02-05, authorizing payment of Village Attorney non-retainer attorneys' fees and costs; and,

WHEREAS, FIGUEREDO & BOUTSIS, P.A., submitted its statements to the village for legal services rendered, and costs advanced, for the period ending August 27, 2013, in the amount of $29,878.49; and,

WHEREAS, the amounts are reasonable and were necessarily incurred.

NOW, THEREFORE, BE IT RESOLVED BY THE MAYOR AND VILLAGE COUNCIL OF THE VILLAGE OF PALMETTO BAY, FLORIDA, AS FOLLOWS:

Section 1. The statements for attorneys' fees and costs received from FIGUEREDO & BOUTSIS, P.A., in the total amount of $29,878.49, copies of which are attached, are approved for payment.

Section 2. This resolution shall take effect immediately upon approval.

PASSED and ADOPTED this _____ day of September, 2013.

Attest: _____
Meighan Alexander
Village Clerk

_____
Shelley Stanczyk
Mayor

APPROVED AS TO FORM:

_____
Eve A. Boutsis,
FIGUEREDO & BOUTSIS, P.A., as Office
of the Village Attorney

FINAL VOTE AT ADOPTION:

Council Member Patrick Fiore _____

Council Member Tim Schaffer _____

Council Member Joan Lindsay _____

Vice-Mayor John DuBois _____

Mayor Shelley Stanczyk _____

FIGUEREDO & BOUTSIS, P.A.

Attorneys & Counselors

18001 Old Cutler Road - Fifth Floor
Telephone: **(305) 235-9344** **Miami, Florida 33157-6417** ***Facsimile:*** **(305) 235-9372**

August 27, 2013

Ron Williams, Village Manager
Village of Palmetto Bay
8950 SW 152nd Street
Palmetto Bay, FL 33157

Re: STATEMENTS FOR PROFESSIONAL SERVICES
The Village of Palmetto Bay

Dear Mr. Williams:

Enclosed are our invoices for professional services rendered and for costs advanced for the period ending August 28, 2013 in the amount of **$29,878.49.** I have tabulated the amounts ***currently due*** on each individual file as follows:

Please deduct from Village Attorney Account No. 5143110, General Legal.				
0293-001	Non-Retainer Legal Services *Invoice No. 20573 dated 8/28/13*	Prof'l Services Disbursements **Total Due**	$	9,638.50 1,211.83 **10,850.33**
	Total		**$**	**10,850.33**
Please deduct from Village Attorney Account No. 5143140, Code Enforcement.				
0293-002	*Zoning Application* *Invoice No.20574 dated 8/28/13*	Prof'l Services Disbursements **Total Due**	$	6,549.00 130.98 **6,679.98**
	Total		**$**	**6,679.98**
0293-004	*Code Enforcement* *Invoice No. 20575 dated 8/28/13*	Prof'l Services Disbursements **Total Due**	$	55.50 1.11 **56.61**

0293-027	*Palmer Trinity vs. VPB* *Invoice No. 20578 dated 8/28/13*	Prof'l Services Disbursements **Total Due**	$	8,917.00 2934.59 **11,851.59**
0293-060	*Shores of Palmetto Bay vs. VPB* *Invoice No. 20577 dated18/28/13*	Prof'l Services Disbursements **Total Due**	$	439.98 32.98 **439.98**
	Grand Total		**$**	**29,878.49**

Do not hesitate to call me if you have any questions regarding these statements.

Very truly yours,

Eve A. Boutsis
Office of the Village Attorney

EAB/lcm
Enclosures
cc: Mayor and Village Council

RESOLUTION NO. _____

A RESOLUTION OF THE MAYOR AND VILLAGE COUNCIL OF THE VILLAGE OF PALMETTO BAY, FLORIDA, RELATING TO ATTORNEYS' FEES; APPROVING ATTORNEYS' FEES AND COSTS FOR FIGUEREDO & BOUTSIS, P.A. IN THE AMOUNT OF $29,878.49; PROVIDING AN EFFECTIVE DATE.

WHEREAS, the Village Council of the Village of Palmetto Bay approved resolution no. 02-05, authorizing payment of Village Attorney non-retainer attorneys' fees and costs; and,

WHEREAS, FIGUEREDO & BOUTSIS, P.A., submitted its statements to the village for legal services rendered, and costs advanced, for the period ending August 27, 2013, in the amount of $29,878.49; and,

WHEREAS, the amounts are reasonable and were necessarily incurred.

NOW, THEREFORE, BE IT RESOLVED BY THE MAYOR AND VILLAGE COUNCIL OF THE VILLAGE OF PALMETTO BAY, FLORIDA, AS FOLLOWS:

Section 1. The statements for attorneys' fees and costs received from FIGUEREDO & BOUTSIS, P.A., in the total amount of $29,878.49, copies of which are attached, are approved for payment.

Section 2. This resolution shall take effect immediately upon approval.

PASSED and ADOPTED this _____ day of September, 2013.

Attest: _____
Meighan Alexander
Village Clerk

_____
Shelley Stanczyk
Mayor

APPROVED AS TO FORM:

_____
Eve A. Boutsis,
FIGUEREDO & BOUTSIS, P.A., as Office
of the Village Attorney

FINAL VOTE AT ADOPTION:

Council Member Patrick Fiore _____

Council Member Tim Schaffer _____

Council Member Joan Lindsay _____

Vice-Mayor John DuBois _____

Mayor Shelley Stanczyk. _____

CONFIDENTIAL - ATTORNEY/CLIENT PRIVILEGE

FIGUEREDO & BOUTSIS, P.A.
ATTORNEYS & COUNSELORS

18001 Old Cutler Road, Suite 533, Miami, Florida 33157

Telephone No.: (305) 235-9344 Facsimile: (305) 235-9372

Shelley Stanczyk
Village of Palmetto Bay
9705 E. Hibiscus Street
Palmetto Bay, Florida 33157

August 27, 2013
Matter ID: 0293-001
General Municipal-VPB
Invoice Number 20573

			Hours	Amount
7/29/2013	EAB	Updated variance memorandum.	0.60	111.00
7/29/2013	EAB	Updated Village Attorney September report.	0.50	92.50
7/29/2013	EAB	Drafted H&J Paving contract.	3.00	555.00
7/29/2013	EAB	Continued to draft appeal to EQCB; communications with GIS and staff on details, and support needed for EQCB extension.	1.00	185.00
7/29/2013	EAB	Provided draft AIPP contract.	0.60	111.00
7/29/2013	EAB	Conducted legal research relating to charter question.	1.00	185.00
7/30/2013	EAB	Research relating to charter language.	0.60	111.00
7/30/2013	EAB	Continued research on enforcement of charter; and telephone conference with Mr. Beau Jackson, FCE.	6.50	1,202.50
7/30/2013	EAB	Telephone conference with Ms. Vanessa Bencomo regarding Ertel.	0.10	18.50
7/30/2013	EAB	Telephone conference with Ms. Fanny Carmona regarding prebid conference and public records.	0.20	37.00
7/30/2013	EAB	Telephone conference with Mr. Ed Silva regarding public funding for improvements (MDC) regarding infrastructure.	0.30	55.50
7/31/2013	EAB	Attention to GIS information and production relating to EQCB; and provided update to Village Council.	0.40	74.00
7/31/2013	EAB	Final edits to variance memorandum.	0.20	37.00
7/31/2013	EAB	Communications with Mr. Jerry Proctor.	0.10	18.50
7/31/2013	EAB	Attention to E-1 Ordinance and GIS information relating to memorandum on same.	0.10	18.50
7/31/2013	EAB	Researched and analyzed updates in state Ethics Codes; and provided synopsis to Village Council.	0.30	55.50
7/31/2013	EAB	Telephone conference with Mr. Ron Williams on pending matters.	0.20	37.00

Payment is due upon receipt. Please notify us within 10 days of any questions you have regarding this invoice. Interest at a rate of 1.5% per month will be charged if payment is not received within 30 days.

CONFIDENTIAL - ATTORNEY/CLIENT PRIVILEGE

7/31/2013	EAB	Telephone conference with Mr. Silva regarding task force and grant opportunities.	0.60	111.00
7/31/2013	EAB	Conducted analysis of research relating to charter, and application and ethics ramifications of same.	2.50	462.50
8/1/2013	EAB	Communications with Mr. Desmond Chin regarding task force and ethical inquiry.	0.20	37.00
8/1/2013	EAB	Telephone conference with League counsel, Mr. Darby Delsalle, Mr. Alan White regarding Ertel matter and status of claim; follow up with PW documentation; and communications with Mr. Lavi regarding same.	1.00	185.00
8/1/2013	EAB	Montessori School - Meeting with Mr. Delsalle regarding same.	0.20	37.00
8/1/2013	EAB	Meeting with Mr. Delsalle and staff regarding pending assignments.	0.40	74.00
8/1/2013	EAB	Meeting with Mr. Williams regarding pending assignments.	0.50	92.50
8/1/2013	EAB	Follow up with Ms. Jessica Sheets regarding League inquiry; continued legal research on charter related matter; and telephone conference with Ms. Sheets.	0.70	129.50
8/1/2013	EAB	Telephone conference with Mrs. Meighan Alexander as to sponsorship of pending assignments, and minutes reflecting same as to 6/19 and 4/1/2013 agenda items for action.	0.30	55.50
8/1/2013	EAB	Telephone conference with CP Tim Schaffer.	1.20	222.00
8/1/2013	EAB	Attention to CRP matters.	0.20	37.00
8/2/2013	EAB	Follow up and review of production in Ertel matter; telephone conference with Mr. Lavi Niv; and closed out of claim file.	0.70	129.50
8/2/2013	EAB	Drafted Dominguez agreement.	2.00	370.00
8/2/2013	EAB	Telephone conference with Mayor Shelley Stanczyk.	0.20	37.00
8/2/2013	EAB	Telephone conference with Mr. Howard Tendrich.	0.20	37.00
8/2/2013	EAB	Revised and analyzed E-1 memorandum.	2.50	462.50
8/2/2013	EAB	Telephone conference with Mr. Williams on pending items.	0.20	37.00
8/2/2013	EAB	Telephone conference with Mr. Williams.	0.30	55.50
8/2/2013	EAB	Telephone conference with CP Patrick Fiore.	0.20	37.00
8/5/2013	EAB	Communication with Ms. Arleen Weintraub regarding lot coverage written in code.	0.20	37.00
8/5/2013	EAB	Revised lot coverage memorandum.	1.00	185.00
8/5/2013	EAB	Revised general release.	0.50	92.50
8/5/2013	EAB	Revised AIPP agreement.	1.20	222.00
8/6/2013	EAB	Communications with Mr. Matt Ross on EQCB appeal.	0.30	55.50

CONFIDENTIAL - ATTORNEY/CLIENT PRIVILEGE

8/6/2013	EAB	Telephone conference with Mr. Williams on pending matters.	0.20	37.00
8/6/2013	EAB	Telephone conference with Mrs. Alexander regarding pending items and future agenda items.	0.30	55.50
8/7/2013	EAB	Reviewed, revised and edited E-1 memorandum.	0.70	129.50
8/7/2013	EAB	Attention and analysis of general release and settlement by League; and communications with the League and Parks.	0.50	92.50
8/7/2013	EAB	Research relating to public records.	0.50	92.50
8/9/2013	EAB	Finalized park items, letters, resolution, memorandum and contract for September council meeting.	1.00	185.00
8/9/2013	EAB	Attention to Singer public record request; and research relating to same.	0.50	92.50
8/9/2013	EAB	Communications with Mr. Carlos Heredia regarding Fire Station.	0.20	37.00
8/9/2013	EAB	Attention to other business item for CP Patrick Flore; and communications with Mrs. Alexander regarding same.	0.10	18.50
8/9/2013	EAB	Telephone conference with Mayor Stanczyk.	0.20	37.00
8/9/2013	EAB	Telephone conference with Mayor Stanczyk.	0.70	129.50
8/12/2013	EAB	Revised E-1 memorandum; and telephone conference with Mr. Delsalle.	0.60	111.00
8/12/2013	EAB	Telephone conference with Ms. Carmona.	0.20	37.00
8/12/2013	EAB	Attention to Tip Top intent to award letter, and letter to bidders as to protest rights; and provided direction as to same.	0.30	55.50
8/13/2013	EAB	Telephone conference with Ms. Carmona; conference call with Mr. Silva and Ms. Carmona; reviewed additional agenda items prepared by Ms. Carmona; and reviewed and revised E-1 Memorandum for finalization.	1.50	277.50
8/14/2013	EAB	Signed off and final review on general release as to Boulos.	0.30	55.50
8/14/2013	EAB	Signed off on Parks draft resolutions.	0.20	37.00
8/15/2013	EAB	Revised memorandum on Pinecrest code.	0.30	55.50
8/16/2013	EAB	Telephone conference with Mrs. Alexander as to scheduling.	0.20	37.00
8/19/2013	EAB	Review of cost recovery regarding variances.	1.00	185.00
8/19/2013	EAB	Telephone conference with Mrs. Alexander regarding sponsorship ordinance.	0.40	74.00
8/19/2013	EAB	Attention to public record request by Mr. Singer with staff.	0.10	18.50
8/19/2013	EAB	Reviewed resolution and cover memorandum on piggy back contract for pavilion; and provided direction to Ms. Carmona.	0.50	92.50
8/19/2013	EAB	Continued to draft Village Attorney update memorandum.	1.00	185.00

CONFIDENTIAL - ATTORNEY/CLIENT PRIVILEGE

8/19/2013	EAB	Finalized notice to bidders, and letter of intent on ITB with Ms. Carmona.	0.40	74.00
8/20/2013	EAB	Reviewed Clay County bid and contact documents; provided direction to staff regarding same; revised paving proposal, and memorandum and resolution for Parks.	1.50	277.50
8/20/2013	EAB	Attention to minutes and sponsorship ordinance with Mrs. Alexander.	0.20	37.00
8/20/2013	EAB	Revised variance memorandum - cost update; and telephone conference with Mr. Delsalle.	0.60	111.00
8/20/2013	EAB	Final review of AIPP contract.	0.30	55.50
8/22/2013	EAB	Attention to special election memorandum.	0.30	55.50
8/23/2013	EAB	Reviewed and revised tennis paving contract.	2.00	370.00
8/23/2013	EAB	Telephone conference with Mrs. Alexander; attention to public records law; and provided direction regarding same.	0.40	74.00
8/23/2013	EAB	Attention to edits to general release by Poulos' counsel.	0.30	55.50
8/26/2013	EAB	Attended staff meeting on agenda items.	1.30	240.50
8/27/2013	EAB	Attention to other business item.	0.30	55.50
			Total Professional Services	9,638.50

8/27/2013	Disbursements incurred - 2.0%	192.77

Payments and Credits

8/8/2013	Check No.: 11784	13,921.64
	Sub-total Payments:	13,921.64

For Professional Services		9,638.50
For Disbursements Incurred		1,211.83
Current Balance:		10,850.33
Previous Balance:		13,921.64
Payments - Thank you		13,921.64
	Total Due	**10,850.33**

To be properly credited, please indicate Invoice Number on your remittance check.

CONFIDENTIAL - ATTORNEY/CLIENT PRIVILEGE

FIGUEREDO & BOUTSIS, P.A.
ATTORNEYS & COUNSELORS

18001 Old Cutler Road, Suite 533, Miami, Florida 33157

Telephone No.: (305) 235-9344 Facsimile: (305) 235-9372

Shelley Stanczyk
Village of Palmetto Bay
9705 E. Hibiscus Street
Palmetto Bay, Florida 33157

August 27, 2013
Matter ID: 0293-002
Zoning Applications
Invoice Number 20574

			Hours	Amount
7/29/2013	EAB	Telephone conference with Mr. Darby Delsalle regarding update on pending projects and assignments.	0.20	37.00
7/29/2013	EAB	BMW- Attention to same with Mr. Delsalle; and communications with Mr. Simon Ferro.	0.20	37.00
7/31/2013	EAB	South Motors BMW - Follow up with Mr. Ferro.	0.10	18.50
8/1/2013	EAB	Meeting with Mr. Delsalle regarding charter school application.	0.40	74.00
8/1/2013	EAB	Attention to Sontag matter with Mr. Delsalle.	0.30	55.50
8/5/2013	EAB	South Motors - Telephone conference with Mr. Delsalle regarding hearings, notice, and charter amendment 10.2.	0.30	55.50
8/6/2013	EAB	KLA - Follow up with Mr. Ferro.	0.10	18.50
8/6/2013	EAB	South Motors - CP Amendment and advertisement; follow up with staff; telephone conference with Mr. Delsalle; and telephone conference with Mr. Alex David.	0.30	55.50
8/6/2013	EAB	Analyzed 4th letter of intent, application; and drafted notice for the CP amendment and zoning change.	1.00	185.00
8/6/2013	EAB	South Motors - telephone conference with Mr. Juan Muniz.	0.20	37.00
8/7/2013	EAB	South Motors - attention to same.	0.40	74.00
8/8/2013	EAB	South Motors - telephone conference with Mr. David.	0.20	37.00
8/9/2013	EAB	South Motors - communications with Mr. Ferro; and telephone conference with Mr. Delsalle and revised advertisement relating to same.	0.30	55.50
8/9/2013	EAB	Alexander School - communications with Mr. Jerry Proctor and Mr. Delsalle regarding sign regulations.	0.10	18.50
8/12/2013	EAB	Attention to South Motors legal description and advertisement.	0.30	55.50
8/12/2013	EAB	Revised Sontag letter.	0.30	55.50

Payment is due upon receipt. Please notify us within 10 days of any questions you have regarding this invoice. Interest at a rate of 1.5% per month will be charged if payment is not received within 30 days.

8/13/2013	EAB	Telephone conference with Mr. Delsalle; and finalized South Motors advertisement.	0.40	74.00
8/14/2013	EAB	Alexander School - Reviewed correspondence by Mr. Proctor; and telephone conference with Mr. Delsalle as to same and response to same.	0.50	92.50
8/15/2013	EAB	Alexander School - Modified letter to Mr. Proctor.	0.30	55.50
8/15/2013	EAB	Signed off on South Motors advertisement.	0.20	37.00
8/15/2013	EAB	South Motors and KLA - telephone conference with Mr. Ferro.	0.20	37.00
8/15/2013	EAB	KLA - Provided responses to inquiry by property owner as to covenant per request of Mr. Ferro.	0.30	55.50
8/15/2013	EAB	Meeting with Mr. Ferro - South Motors.	1.40	259.00
8/16/2013	EAB	Revised Sontag letter and edited same.	0.70	129.50
8/16/2013	EAB	South Motors: Follow up with Mr. Delsalle; and follow up with Mr. David; telephone conference with Mr. Delsalle; researched BMW site history and provided same to Mr. David; telephone conference with Ms. Rodriguez regarding same; and research relating to same.	1.30	240.50
8/19/2013	EAB	Communication with Mr. Proctor and Alexander School on variance request.	0.10	18.50
8/19/2013	EAB	Follow up with Mr. David as to South Motors.	0.40	74.00
8/19/2013	EAB	Reviewed and revised advertisement on South Motors.	0.10	18.50
8/19/2013	EAB	South Motors BMW - meeting with Mr. David as to staff report.	1.20	222.00
8/20/2013	EAB	South Motors: Analyzed County resolutions, covenants, and prepared history for staff report; telephone conference with Mr. David; telephone conference with Mr. Delsalle; telephone conference with Mrs. Meighan Alexander and Mr. Delsalle; revised advertisement and notices; telephone conferences with Mr. Ferro; and attention to 375.251, F.S; and corrected survey information and advertisement relating to same.	5.40	999.00
8/20/2013	EAB	Alexander School - communications with Mr. Proctor regarding Unity of Title or covenant in lieu of.	0.20	37.00
8/21/2013	EAB	Finalized with Mr. Delsalle and Mr. Ferro the advertising for South Motors BMW.	0.40	74.00
8/21/2013	EAB	Alexander School: Communications with Mr. Proctor; and telephone conference with Mr. Delsalle regarding unity of title.	0.20	37.00
8/22/2013	EAB	South Motors - analysis of and modification of staff memorandum.	4.00	740.00
8/23/2013	EAB	South Motors - revised, edited, and analyzed staff report.	3.00	555.00
8/26/2013	EAB	South Motors - edits to FLUM and rezoning report; and telephone conference with Mr. Delsalle regarding same.	1.60	296.00
8/26/2013	EAB	Telephone conference with Ms. Noel Sontag and Mr. Delsalle.	0.30	55.50

CONFIDENTIAL - ATTORNEY/CLIENT PRIVILEGE

8/26/2013	EAB	Meeting with Mr. Delsalle and staff on pending South Motors filings.	2.50	462.50
8/27/2013	EAB	South Motors: Telephone conferences with Mr. Ferro (several); telephone conferences with Mr. Delsalle; drafted ordinance on FLUM; drafted ordinance on rezoning; finalized staff memorandum; analyzed charter; analyzed Chapter 163, F.S; edited legal description; discussed edits with Mr. Ferro; and finalized all documents.	6.00	1,110.00
		Total Professional Services		6,549.00

8/27/2013	Disbursements Incurred - 2.0%	130.98	

Payments and Credits

8/8/2013	Check No.: 11784	981.24	
	Sub-total Payments:	981.24	

For Professional Services	6,549.00
For Disbursements Incurred	130.98
Current Balance:	6,679.98
Previous Balance:	981.24
Payments - Thank you	981.24
Total Due	**6,679.98**

To be properly credited, please indicate Invoice Number on your remittance check.

CONFIDENTIAL - ATTORNEY/CLIENT PRIVILEGE

FIGUEREDO & BOUTSIS, P.A.
ATTORNEYS & COUNSELORS

18001 Old Cutler Road, Suite 533, Miami, Florida 33157

Telephone No.: (305) 235-9344 Facsimile: (305) 235-9372

Shelley Stanczyk
Village of Palmetto Bay
9705 E. Hibiscus Street
Palmetto Bay, Florida 33157

August 27, 2013
Matter ID: 0293-004
Code Enforcement
Invoice Number 20575

			Hours	Amount
8/6/2013	EAB	Attention to Green Hills foreclosure and liens; and communication with counsel regarding same.	0.30	55.50
		Total Professional Services		55.50
8/27/2013	Disbursements Incurred - 2.0%		1.11	
Payments and Credits				
8/8/2013	Check No.: 11784		679.32	
		Sub-total Payments:	679.32	
	For Professional Services			55.50
	For Disbursements Incurred			1.11
	Current Balance:			56.61
	Previous Balance:			679.32
	Payments - Thank you			679.32
		Total Due		**56.61**

To be properly credited, please indicate Invoice Number on your remittance check.

Payment is due upon receipt. Please notify us within 10 days of any questions you have regarding this invoice. Interest at a rate of 1.5% per month will be charged if payment is not received within 30 days.

CONFIDENTIAL - ATTORNEY/CLIENT PRIVILEGE

FIGUEREDO & BOUTSIS, P.A.
ATTORNEYS & COUNSELORS

18001 Old Cutler Road, Suite 533, Miami, Florida 33157

Telephone No.: (305) 235-9344 Facsimile: (305) 235-9372

Shelley Stanczyk
Village of Palmetto Bay
9705 E. Hibiscus Street
Palmetto Bay, Florida 33157

August 28, 2013
Matter ID: 0293-027
Palmer Trinity Private School,
Invoice Number 20578

			Hours	Amount
7/29/2013	EAB	Follow up with Mr. Stan Price and Mrs. Meighan Alexander on public records.	0.20	37.00
8/1/2013	EAB	Attention to amended answer and affirmative defenses; forwarded same to council; and reviewed precedent regarding same.	1.00	185.00
8/2/2013	EAB	Attention to discovery orders.	0.20	37.00
8/5/2013	EAB	Communication with Mr. Price; and attention to shade session.	0.10	18.50
8/6/2013	EAB	Telephone conference with Mr. Jerry Proctor.	0.20	37.00
8/6/2013	EAB	Prepared for shade session.	1.50	277.50
8/6/2013	EAB	Communications with Mr. Price and Mr. Jeff Hochman.	0.20	37.00
8/6/2013	EAB	Attention to communications on shade sessions; telephone conference with Mr. Price; and telephone conference with Mr. Ron Williams.	1.00	185.00
8/7/2013	EAB	Attention to emails as to shade session release; communications with Mr. Hochman; telephone conference with Mr. Price; telephone conference with Mr. Williams; and telephone conferences with and communications with council persons.	2.00	370.00
8/7/2013	EAB	Attended special council meeting and attorney-client session.	6.30	1,165.50
8/8/2013	EAB	Telephone conference with CP Patrick Fiore; and follow up on shade session.	0.70	129.50
8/8/2013	EAB	Drafted proposed counter-offer; and attention to landscape plan.	4.50	832.50
8/8/2013	EAB	Communications with Mr. Price and Mr. Hochman; and telephone conference with Mr. Williams; and telephone conference with Mr. Price.	0.60	111.00
8/8/2013	EAB	Telephone conference with CP Tim Schaffer; telephone conference with CP Joan Lindsay; telephone conference with CP Patrick Fiore; telephone conference with Mayor Shelley Stanczyk; and telephone conference with Mr. Ben Kuehne.	3.00	555.00

Payment is due upon receipt. Please notify us within 10 days of any questions you have regarding this invoice. Interest at a rate of 1.5% per month will be charged if payment is not received within 30 days.

8/9/2013	EAB	Telephone conference with Mr. Williams regarding permits.	0.30	55.50
8/9/2013	EAB	Telephone conference with Mr. Hochman and attention, and follow up on permits.	0.40	74.00
8/9/2013	EAB	Began drafting development agreement.	2.70	499.50
8/10/2013	EAB	Telephone conference with Mr. Kuehne.	0.40	74.00
8/12/2013	EAB	Drafted development agreement/settlement agreement; and communications with Mr. Hochman regarding same.	7.00	1,295.00
8/13/2013	EAB	Reviewed initial comments by Mr. Hochman; communications with Mr. Hochman; telephone conference with Mr. Price; email communications with Mr. Price; and communications with the Village Council; telephone conference with VM John DuBois.	1.00	185.00
8/14/2013	EAB	Telephone conference with Mayor Stanczyk; reviewed communications by Council Persons; distributed draft to Council; revised agreement per edits of Mr. Hochman; telephone conference with Mr. Hochman; telephone conference with Mayor Stanczyk; telephone conference with CP Lindsay; continued edits; telephone conference with Mr. Price; telephone conference with VM DuBois; telephone conference with CP Fiore; telephone conference with Mayor Stanczyk; email communications with CP Schaffer; and telephone conference with CP Lindsay.	6.70	1,239.50
8/15/2013	EAB	Attention to PT settlement counter-offer.	0.30	55.50
8/19/2013	EAB	Attention to counter-offer; communications with Council; and telephone conference with Mr. Williams; telephone conference with VM DuBois.	1.40	259.00
8/22/2013	EAB	Telephone conference with council persons; email communications with council persons; communications with Mr. Hochman and his assistant and Village staff to coordinate shade session; follow up with Council; telephone conferences with CP Lindsay; and communications with VM DuBois.	1.50	277.50
8/22/2013	EAB	Telephone conference with CP Lindsay; telephone conference with CP Schaffer; telephone conference with VM DuBois; telephone conference with Mr. Williams; telephone conference with Mayor Stanczyk; and communications with Mr. Sean Cleary.	1.00	185.00
8/23/2013	EAB	Communications with Mr. Cleary; communications with Mr. Hochman; telephone conference with Mayor Stanczyk; telephone conference with CP Lindsay; telephone conference with Mr. Hochman; and telephone conference with CP Schaffer.	2.70	499.50
8/26/2013	EAB	Communications with CP Schaffer; telephone conference with Mayor Stanczyk; and communications with Council regarding shade session.	0.30	55.50
8/26/2013	EAB	Telephone conference with CP Schaffer.	0.10	18.50
8/26/2013	EAB	Communications with Council Persons and Clerk regarding shade sessions.	0.30	55.50

CONFIDENTIAL - ATTORNEY/CLIENT PRIVILEGE

8/27/2013	EAB	Telephone conference with Mrs. Alexander; telephone conference with Mr. Williams; and communications with Mr. Hochman.	0.40	74.00
8/27/2013	EAB	Attention to inquiry of court reporter.	0.20	37.00
		Total Professional Services		8,917.00

8/28/2013	Disbursements incurred - 2.0%	178.34	
Payments and Credits			
8/8/2013	Check No.: 11784	8,650.84	
	Sub-total Payments:	8,650.84	

For Professional Services	8,917.00
For Disbursements Incurred	2,934.59
Current Balance:	11,851.59
Previous Balance:	8,650.84
Payments - Thank you	8,650.84
Total Due	**11,851.59**

To be properly credited, please indicate Invoice Number on your remittance check.

CONFIDENTIAL - ATTORNEY/CLIENT PRIVILEGE

FIGUEREDO & BOUTSIS, P.A.
ATTORNEYS & COUNSELORS

18001 Old Cutler Road, Suite 533, Miami, Florida 33157

Telephone No.: (305) 235-9344 Facsimile: (305) 235-9372

Shelley Stanczyk
Village of Palmetto Bay
9705 E. Hibiscus Street
Palmetto Bay, Florida 33157

August 27, 2013
Matter ID: 0293-060
Shores at Palmetto Bay vs. VPB
Invoice Number 20577

			Hours	Amount
8/2/2013	EAB	Telephone conference with Mr. JC Planas.	0.30	55.50
8/6/2013	EAB	Follow up with Mr. Planas.	0.20	37.00
8/19/2013	EAB	Drafted joint motion for additional 90 day extension; communications with Mr. Planas.	0.70	129.50
8/19/2013	EAB	Telephone conference with Mr. Planas.	0.20	37.00
8/20/2013	EAB	Follow up with Mr. Planas and executed joint extension request; and filed same.	0.20	37.00
8/22/2013	EAB	Telephone conference with Mr. Darby Delsalle; and telephone conference with Mr. Planas regarding submittals.	0.40	74.00
8/27/2013	EAB	Attention to shores order; and communications with Mr. Planas.	0.20	37.00
		Total Professional Services		407.00

Disbursements

8/21/2013	Mileage.	15.84
8/21/2013	Parking Charge.	9.00
8/27/2013	Disbursements incurred - 2.0%	8.14

Payments and Credits

8/8/2013	Check No.: 11784	113.22
	Sub-total Payments:	113.22

Payment is due upon receipt. Please notify us within 10 days of any questions you have regarding this invoice. Interest at a rate of 1.5% per month will be charged if payment is not received within 30 days.

For Professional Services		407.00
For Disbursements Incurred		32.98
Current Balance:		439.98
Previous Balance:		113.22
Payments - Thank you		113.22
	Total Due	**439.98**

To be properly credited, please indicate Invoice Number on your remittance check.