138kV SINGLE CIRCUIT TANGENT
UNIVERSAL SPUN CONCRETE POLE WITH THREADED INSERTS
TRIANGULARLY FRAMED POLYMER POST STRUCTURE 31953

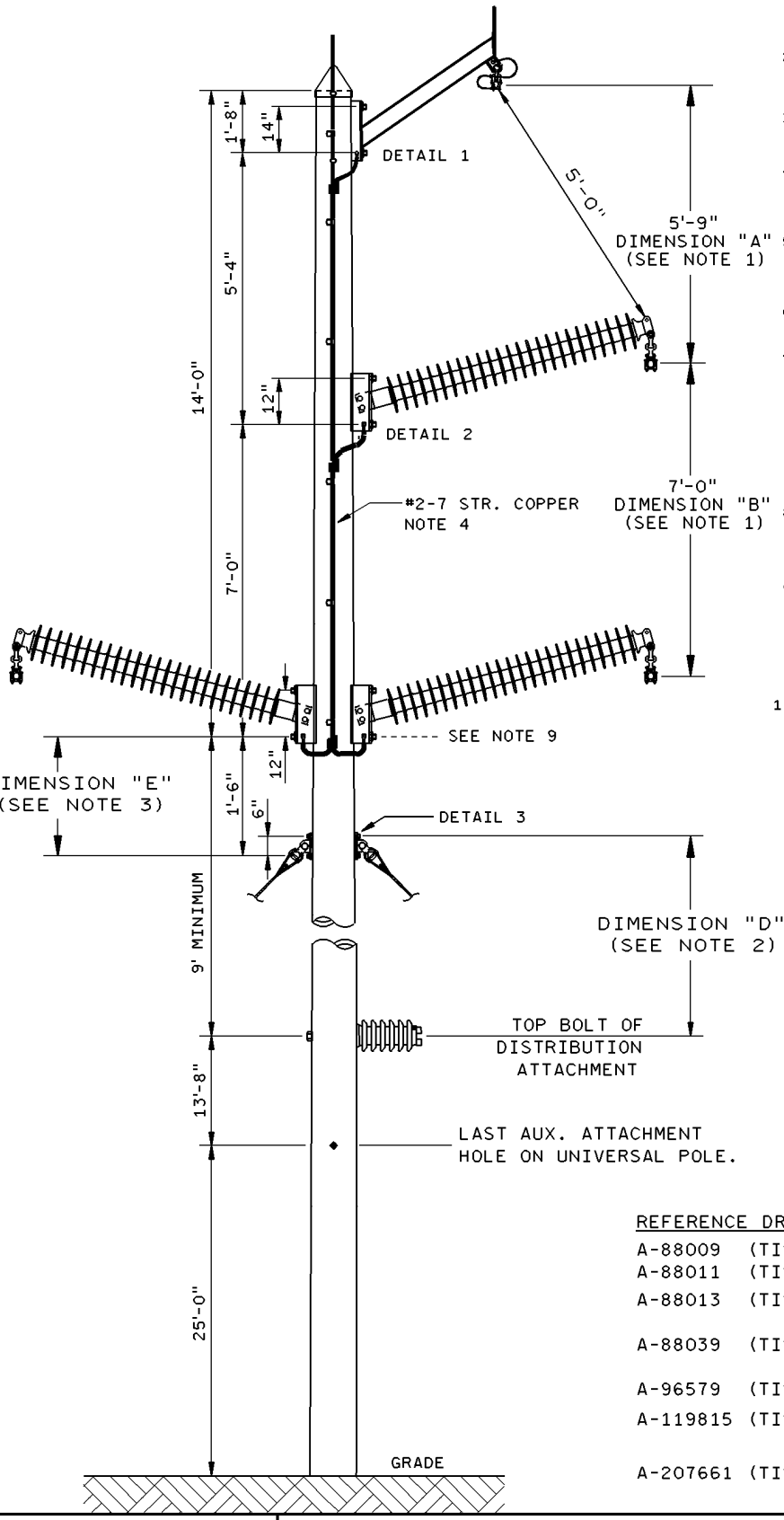

CONSTRUCTION NOTES

1. DIMENSIONS "A" AND "B" SHALL BE AS SHOWN UNLESS OTHERWISE SPECIFIED IN THE STRUCTURE LIST.
2. WHEN REQUIRED DIMENSION "D" SHALL BE AS SPECIFIED IN THE DISTRIBUTION ATTACHMENT BORING DETAILS, PER A-88815 (TIS).
3. DIMENSION "E" WILL BE SPECIFIED IN THE PROJECT SPECIFICATIONS WHEN GUYS ARE REQUIRED.
4. WHEN 19#9 OHGW IS REQUIRED ALL BONDING MUST BE CHANGED TO 2/0 COPPER WIRE.

ENGINEERING NOTES

5. DIMENSION "A" VARIES DEPENDING ON THE APPLIED LOAD. THE DIMENSION SHOWN IS BEFORE ANY LOAD IS APPLIED. REFER TO THE LOAD/DEFLECTION GRAPH FOR THE INSULATOR USED.
6. REFER TO THE COMBINED LOADING PROGRAM TO INSURE PROPER LOADING APPLICATION OF THE INSULATOR.
7. A SECOND OHGW AND BRACKET MAY BE INSTALLED ON THE OPPOSITE SIDE OF THE POLE AS THE SHOWN OHGW EXTENSION BRACKET WHEN BUILDING NEW LINES IN AREAS WITH A KERAUNIC LEVEL ABOVE 75 (ANNUAL LIGHTNING FLASH DENSITY ABOVE 9 FLASHES/KM^2). CHECK WITH EITHER THE TRANSMISSION RELIABLITY GROUP OR DESIGN SECTION
8. THE SUSPENSION CONDUCTOR ATTACHMENT WILL BE LOOSENED OR BIND IF LESS THAN 200 POUNDS OF CANTILEVER LOAD IS APPLIED.THIS CONDITION CAN CAUSE RADIO AND TV INTERFERENCE.
9. THE EXTERNAL POLE GROUND WILL STOP AT THE LOWEST BONDING ATTACHMENT. IF GUYS ARE REQUIRED OR DISTRIBUTION IS ATTACHED, THE LOCATION OF THE EXPANSION SHIELDS AND THE POLE GROUND SHALL BE EXTENDED TO THE LOWEST ANCHOR/DISTRIBUTION ATTACHMENT POINT.
10. FOR CONDUCTOR DISTANCE PURPOSES. MAXIMUM LOAD DEFLECTION MAY BE APPROXIMATED TO BRING CONDUCTOR TO THE LOWER INSULATOR BOLT HOLE HEIGHT.

REFERENCE DRAWINGS

A-88009	(TIS)	BONDING AND GROUNDING SPECIFICATIONS
A-88011	(TIS)	GROUND ROD INSTALLATION
A-88013	(TIS)	BONDING DETAILS FOR OVERHEAD GROUND WIRE CLAMP
A-88039	(TIS)	POLE SETTING SPECIFICATIONS FOR CONCRETE POLES
A-96579	(TIS)	CONCRETE POLE STAKING
A-119815	(TIS)	SPECIFICATIONS FOR HANDLING AND CLEANING POLYMER INSULATORS
A-207661	(TIS)	HANDLING & FRAMING SPUN CONCRETE POLES

NO	DATE	BY	CH	COR	APP	REVISION
4	2/6/01	DRL			LLW	20001236: REV'D OHGW; CHANGED BOLTS FROM 3/4" TO 1" ON OHGW BRACKET.
6		AS				20030914:REV'D HARDWARE.
5	3/1/01	TLO			LLW	20010191 REPLACED OHGW BRACKET WITH M&S 141-40040-0.

CHECK IN DATE: 08/25/2003-08:47:09:782

POWER SYSTEMS
FPL

TRANSMISSION STRUCTURE STANDARDS

DATE:	APPROVED:	SECTION 1.2	SHEET 1 OF 3
9/18/98	JEFF BURNHAM	TS,TSS,S1	A-125010-6

CADE

DETAILS FOR STRUCTURE 31953

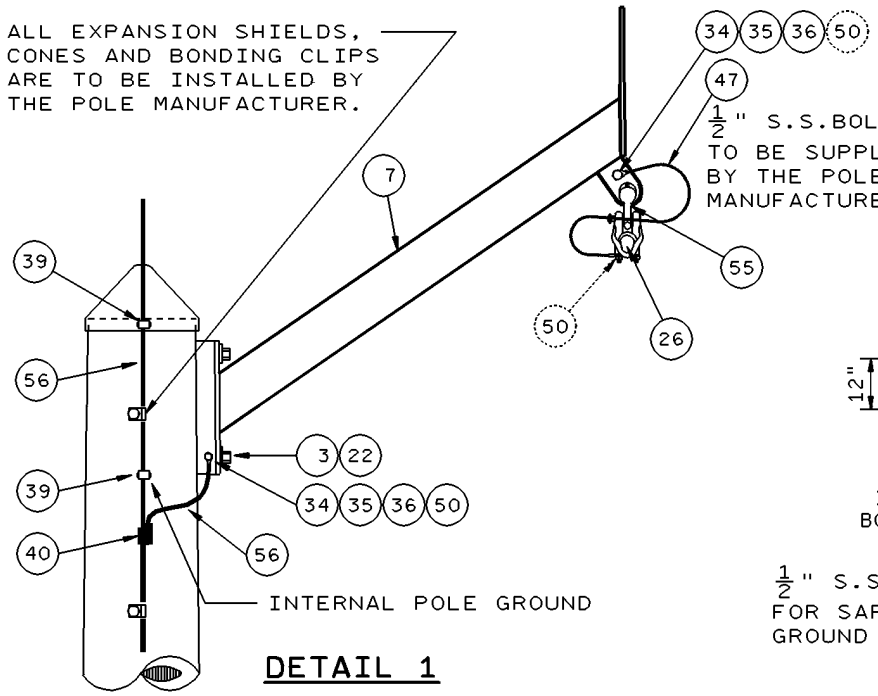

DETAIL 1
OVERHEAD GROUND WIRE ATTACHMENT (120)

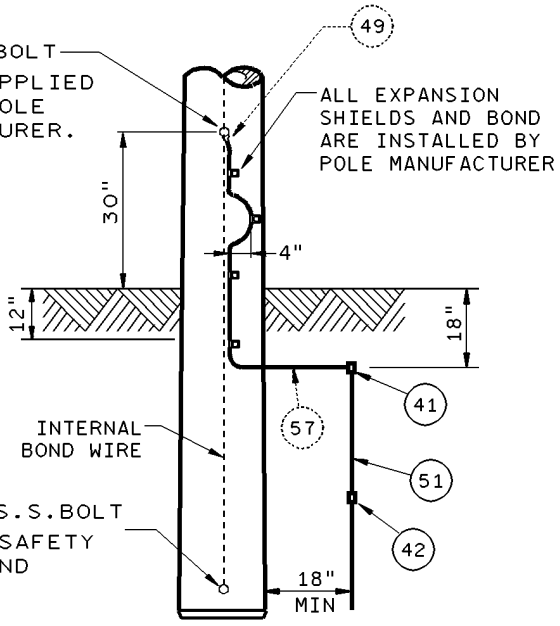

DETAIL 4
GROUNDING (800)

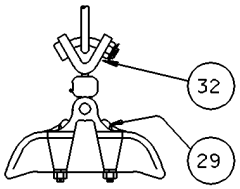

SIDE VIEW DETAIL

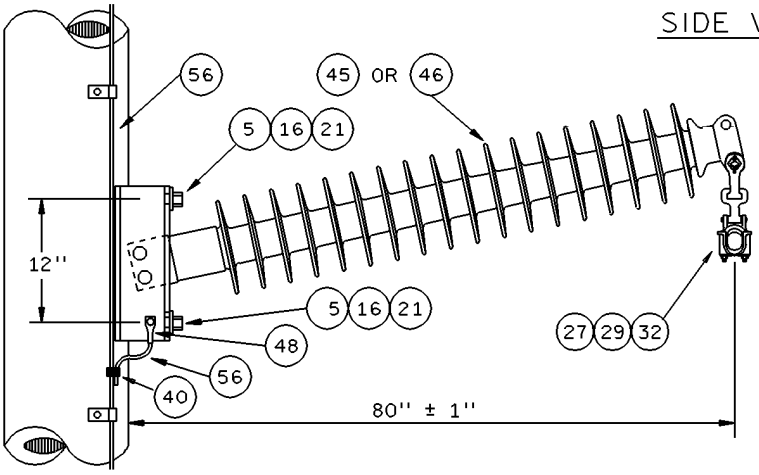

DETAIL 2
INSULATOR ATTACHMENT (250)

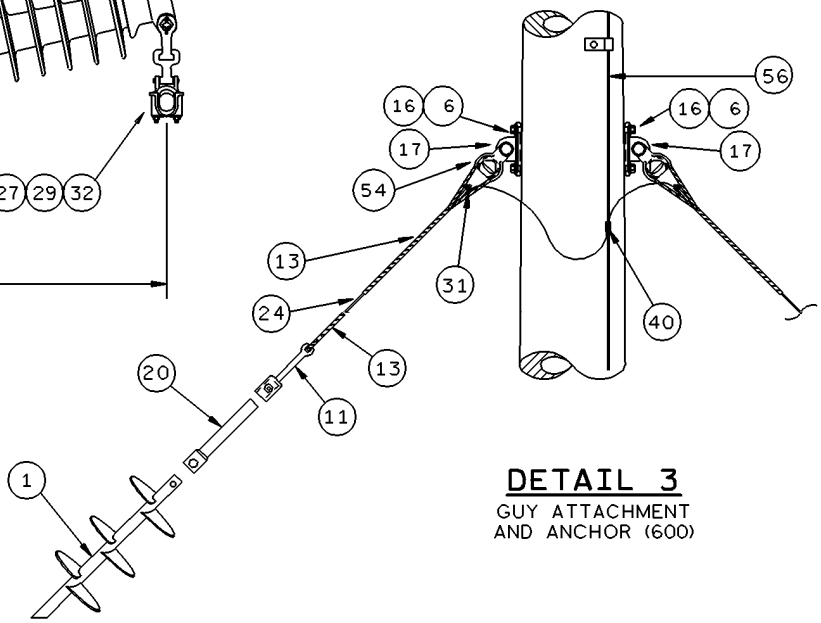

DETAIL 3
GUY ATTACHMENT AND ANCHOR (600)

NO	DATE	REVISION	BY	CH	COR	APP
5	3/1/01	20010191 REVISED ITEM 7 IN DETAIL 1 TO 3'-6" OHGW BRACKET.	TLO			LLW
6		20030914:REV'D HARDWARE.	AS			
4	2/6/01	20001236: REV'D OHGW BRACKET; CHANGED BOLTS FROM 3/4" TO 1" ON OHGW BRACKET.	DRL			LLW

CHECK IN DATE: 08/25/2003-08:47:27:297

POWER SYSTEMS
FPL

TRANSMISSION STRUCTURE STANDARDS

DATE:	APPROVED:	SECTION 1.2	SHEET 2 OF 3
9/18/98	JEFF BURNHAM	TS,TSS,S1	A-125010-6

CADE

BILL OF MATERIAL FOR STRUCTURE 31953

(GUY#1) - GUY NUMBER DESIGNATES ONE TYPE OF GUY
▭ - NUMBER/QUANTITY TO BE SUPPLIED MANUALLY OR BY COMPUTER
\+ - QUANTITY REQUIRED WITH NO DISTRIBUTION ATTACHED
* - THIS ITEM SUPPLIED AS PART OF OTHER ITEM LISTED
X - SIZE AND/OR QUANTITY TO BE DETERMINED FOR EACH JOB

ACCT.NO.	ITEM NO.	DESCRIPTION	M&S NUMBER CLASS	M&S NUMBER ITEM		UNIT	SD POST UNGUYED TOTAL	SD POST GUYED TOTAL	HD POST UNGUYED TOTAL	HD POST GUYED TOTAL	TOTAL	TOTAL	DETAIL NUMBER AND NUMBER OF TIMES DETAIL OCCURS ON THIS STRUCTURE: 1 (1EA)	2 (3EA)	3 (1EA)	4 (1EA)	5 (EA)	6 (EA)	7 (EA)	8 (EA)	9 (EA)
													QUANTITY PER DETAIL								
ACCOUNT-355	1	ANCHOR, SCREW, 1 1/2" SHAFT, TRIPLE HELIX	140	047	006	EA		2		2					2						
	2																				
	3	STUD, OHGW, 1" X 9 1/2" WITH NUTS	140	350	110	EA	2	2	2	2			2								
	4																				
	5	STUD,INSUL,, 1" X 13",WITH NUTS	140	350	108	EA	6	6	6	6				2							
	6	BOLT, MACHINE, 1" X 5" A-325	140	110	051	EA		4		4					4						
	7	BRACKET, OHGW, 3'-6" EXTENSION	141	400	400	EA	1	1	1	1			1								
	8																				
	9																				
	10																				
	11	EYE, THIMBLEYE FOR 1½" SQ. SHAFT	141	602	003	EA		2		2					2						
	12																				
	13	GRIP, GUY, PREFORMED	141	▭		EA		4		4					4						
	14	GUY MARKER	143	640	000	EA		2		2					2						
	15																				
	16	WASHER, LOCK, FOR 1" BOLT	145	399	024	EA	6	10	6	10				2	4						
	17	PLATE, GUY	143	580	007	EA		2		2					2						
	18	POLE, XX FT., ROUND SPUN CONCRETE	155	▭		EA	1	1	1	1											
	19																				
	20	SHAFT, EXTENSIONS, 1 1/2" SQ. BY FT	144	▭				X		X					X						
	21	WASHER, FLAT, ROUND, FOR 7/8" BOLT	145	363	003	EA	3	3	3	3				1							
	22	NUT,LOCK,PALNUT,OHGW	142	777	001	EA	2	2	2	2			2								
	23																				
	24	WIRE, GUY, FOR DOWN GUY	142	▭		FT		X		X					X						
	25																				
ACCOUNT-356	26	ARMOR ROD, PREFORMED FOR OHGW	104	▭		EA	1	1	1	1			1								
	27	ARMOR ROD, PREFORMED FOR CONDUCTOR	104	▭		EA	3	3	3	3				1							
	28																				
	29	CLAMP, CONDUCTOR, WITH EYE SOCKET	102	▭		EA	3	3	3	3				1							
	30	CLAMP, OHGW, SUSPENSION	102	▭		EA	1	1	1	1			1								
	31	CLAMP, BONDING, PG #2-7 STR. TO GUY WIRE	120	▭		EA		2		2					2						
	32	CLEVIS-Y, BALL, 30K	130	344	008	EA	3	3	3	3				1							
	33																				
	34	WASHER,LOCK, 1/2" BOLT S.S.	145	294	010	EA	2	2	2	2			2								
	35	BOLT,MACHINE, 1/2" X 1 1/2" WITH NUT, SS	140	515	557	EA	2	2	2	2			2								
	36	WASHER,ROUND 1/2" BOLT, SS	145	355	001	EA	2	2	2	2			2								
	37																				
	38																				
	39	CONNECTOR,GROUND,#2-7 STR.(2/0)TO 1/2" INSERT	120	▭		EA	2	2	2	2			2								
	40	CONNECTOR,COMPRESSION,#2-7 STR.(2/0)TO #2-7 STR.(2/0)	120	▭		EA	5	5	5	5			1	1	1						
	41	CONNECTOR, EXOTHERMIC, #4 SOL TO 5/8" GND ROD	120	038	001	EA	1	1	1	1						1					
	42	COUPLING, BRONZE, FOR 5/8" GROUND ROD	130	405	104	EA	2	2	2	2						2					
	43																				
	44																				
	45	INSULATOR, POST, STANDARD STRENGTH	131	512	001	EA	3	3						1							
	46	INSULATOR, POST, HEAVY DUTY	131	532	002	EA			3	3				1							
	47	STRAP, GRD, OHGW, S-SHAPED WITH 1/2" LUGS	112	▭		EA	1	1	1	1			1								
	48	LUG, GROUNDING, #2-7 STR.(2/0) TO 3/8" BOLT	120	▭		EA	3	3	3	3				1							
	49	LUG, GROUNDING, #4 SOLID TO 1/2" BOLT	120	864	009	EA	X	X	X	X						1					
	50	LUG, GROUNDING, #2-7 STR.(2/0) TO 1/2" BOLT	120	▭		EA	1	1	1	1			3								
	51	ROD, GROUND, COPPERCLAD, 5/8" X 10'	130	614	005	EA	3	3	3	3						3					
	52																				
	53																				
	54	THIMBLE, CLEVIS, 60K	130	395	001	EA		2		2					2						
	55	SHACKLE, ANCHOR,30K	144	348	001	EA	1	1	1	1			1								
	56	WIRE, GROUND, #2-7 STR.(2/0), BSD COPPER	112	▭		FT	+70	+70	+70	+70											
	57	WIRE, GROUND, #4 SOLID COPPER	112	309	000	FT	X	X	X	X						10					
	58																				
	59																				
	60																				
	61																				
	62																				
	63																				

CHECK IN DATE: 08/26/2003-09:47:53:793

NO	DATE	BY	CH	COR	APP
4	2/6/01	DRL			LLW
6		AS			
5	3/1/01	TLO			LLW

REVISION

20001236: REV'D OHGW;CHANGED BOLTS FROM 3/4" TO 1" ON OHGW BRACKET.
20030914:REV'D HARDWARE.
20010191 CHANGED ITEM 7 TO 3'-6" OHGW BRACKET.

POWER SYSTEMS
FPL

TRANSMISSION STRUCTURE STANDARDS

DATE: 9/18/98
APPROVED: JEFF BURNHAM
SECTION 1.2
TS,TSS,S1
SHEET 3 OF 3
A-125010-6
CADE